INCH POUND
MS27715C
1 November 2011
SUPERSEDING
MS27715B
27 March 1995

MILITARY SPECIFICATION SHEET

RELAY, 150 AMP, 3 PST, N. O.,TYPE I, COIL AND CONTACTS INDIVIDUALLY SEALED

INACTIVE FOR NEW DESIGN EFFECTIVE 27 MARCH 1985
NO SUPERSEDING STANDARD.

This specification is approved for use by all Departments and Agencies of the Department of Defense.

The requirements for acquiring the relays described herein shall consist of this specification sheet and MIL-PRF-6106.

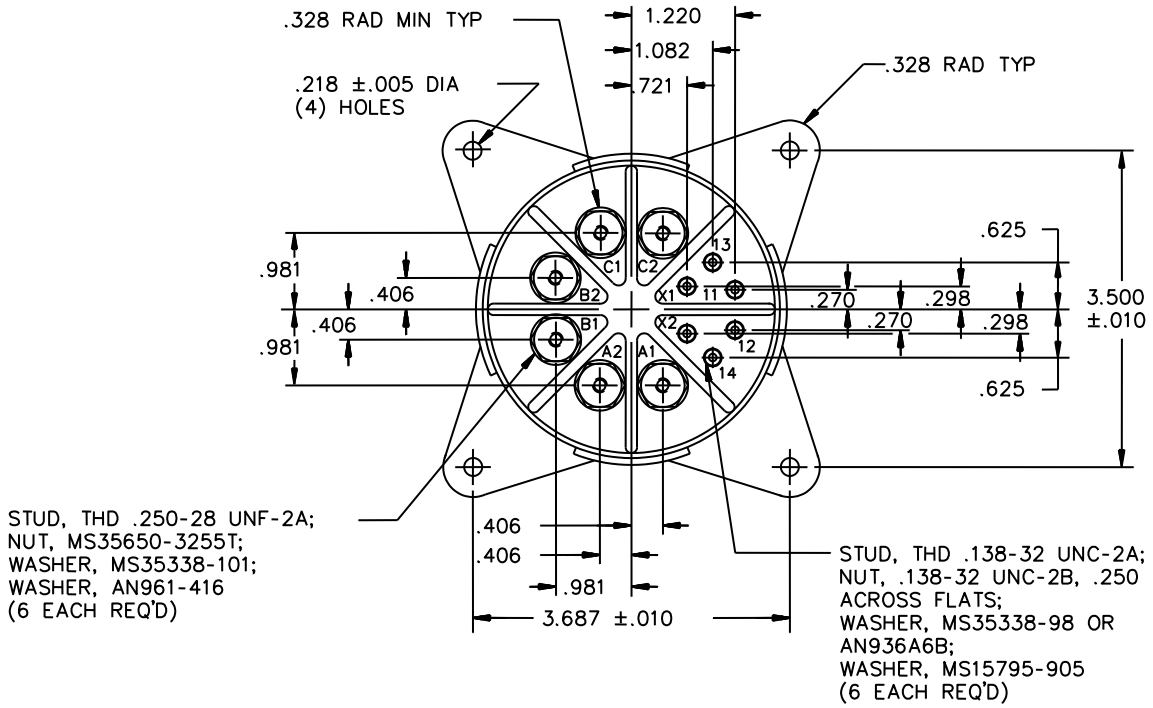

FIGURE 1. Dimensions and configuration.

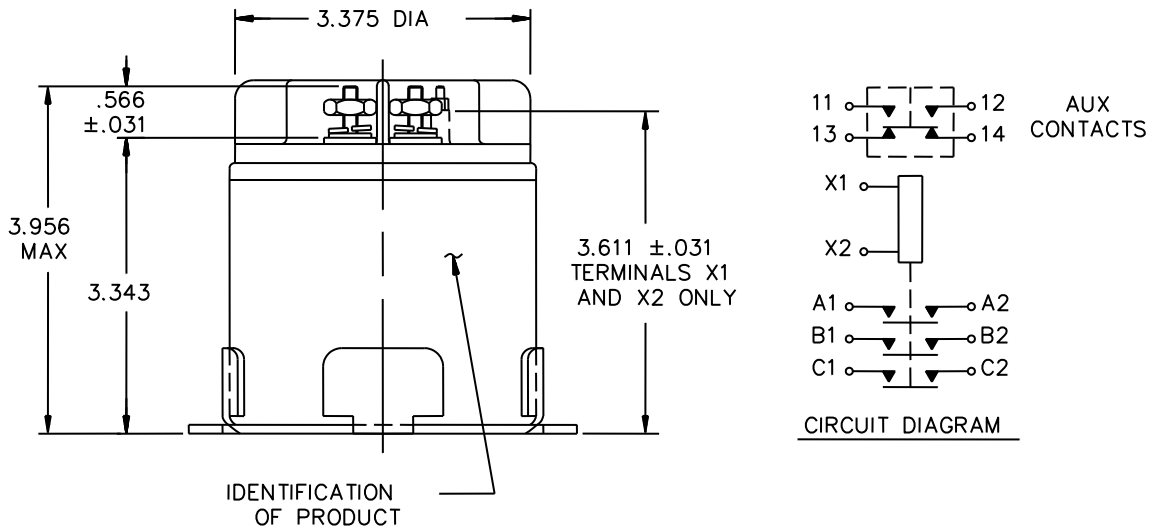

Inches	mm	Inches	mm
.005	0.13	.721	18.31
.010	0.25	.981	24.92
.031	0.79	1.082	27.48
.218	5.54	1.220	30.99
.270	6.86	3.343	84.91
.298	7.57	3.375	85.73
.328	8.33	3.500	88.90
.406	10.31	3.611	91.72
.566	14.38	3.687	93.65
.625	15.88	3.956	100.48

NOTES:

1. Dimensions are in inches.
2. Metric equivalents are given for general information only.
3. Unless otherwise specified, tolerance is ±.015 (0.38 mm).
4. For design feature purposes, this specification takes precedence over acquisition documents referenced herein.
5. Referenced documents shall be of the issue in effect on date of invitation for bid.

FIGURE 1. Dimensions and configuration - Continued.

REQUIREMENTS:

Dimensions and configuration: See figure 1.

Dash numbers and general characteristics: See table I.

Contact data:

Load ratings: See table II.

Maximum contact drop, initial: At 100 A: .150 V; at 150 A: .225 V.

After life test: At 100 A: .175 V; at 150 A: .260 V.

Overload current (NO): 800 amperes.

Rupture current (NO): 1,000 amperes.

Coil data: See table III.

Duty rating: Continuous.

RFI specification: MIL-STD-461 (applicable to coil circuits of ac operated relays).

Electrical data:

Minimum insulation resistance:

Initial: 100 megohms.

After life or environmental test: 50 megohms.

Dielectric strength:

Sea level, 2-5 seconds:

	Initial	After life tests
Coil:	1,250	1,000
Contacts (Main):	2,000	1,500
Contacts (Auxiliary)	1,500	1,125

Altitude, 1 minute (80,000 ft.):

Coil		500
Contacts (Main and auxiliary)		700

Environmental characteristics:

Temperature range: -70°C to +125°C.

Maximum altitude rating: 80,000 feet.

Shock, g-level: 50 g's.

Duration: 6-9 ms.

Maximum duration contact opening: 2 ms.

Vibration, sinusoidal:

G-level: 10 g's.

Frequency range: 5 Hz to 1,500 Hz.

Acceleration, centrifugal: 15 g's.

Terminal strength (high temperature pull and torque test): Not applicable.

Part or Identifying Number (PIN): MS27715- (plus applicable dash number from table I).

Quality assurance provisions: Group B and group C testing are not required. In the event of a change in the design or construction of the part, the manufacturer shall notify the qualifying activity and shall impose additional testing requirements as necessary.

The Qualified Products List (QPL) associated with this inactive for new design specification will be maintained until acquisition of the product is no longer required, whereupon the specification and the QPL will be canceled.

Qualification by similarity: See MIL-PRF-6106.

TABLE I. Dash numbers and general characteristics.

PIN	Coil type	Terminal type	Auxiliary contacts	Maximum weight (pounds)
MS27715-1	dc	Lug	Yes	3.0
MS27715-2	dc	Lug	Yes	3.0

TABLE II. Rated contact load (amperes per pole) (case grounded).

Type of load	Life operating cycles x 10^3	28 V dc				115 V ac, 1 phase				115/200 V ac 3 phase 1/ Main		240/416 V ac 3 phase 1/ Main		See appro-priate notes
		Main		Aux		Main		Aux						
		NO	NC	NO	NC	400 Hz	60 Hz	400 Hz	60 Hz	400 Hz	60 Hz	400 Hz	60 Hz	
Resistive	50	150		10	10	150	100	10		150	100			
Inductive	50													
Inductive	10	100		10	10	100		10		100				
Motor	50	100		5	5	100		5		100				
Lamp				3	3			3						
Transfer load														2/
Mechanical' life (reduced current	200	25		2.5	2.5									
Mixed loads	50	10		0.10	0.10	10		0.10		10				

1/ 115/200 V ac, 240/416 V ac for 60 Hz ratings. Absence of value indicates that the relay may not be suitable for 3 phase applications.

2/ Transfer load indicates that the relay is suitable for transfer between unsynchronized ac power supplies at the rating indicated.

TABLE III. Operating characteristics.

PIN	Coil data											Time - (milliseconds maximum)					
	Coil	Rated			Maximum		Max pickup voltage 1/		Cont. current test	Hold voltage 2/	Drop-out voltage 2/	Oper-ate 3/	Re-lease 4/	Bounce			
														Main		Aux	
		Volts 1/	Freq. (Hz)	Res (Ω)	Volts	A	Normal	High temp. test						NO	NC	NO	NC
MS27715-1	X	28	dc	---	29	.6	18	21	22.5	7.0	1.5	.040	.015	.002		.002	.002
MS27715-2	X	115	400	---	124	.2	90	90	90	40.0	10.0	.040	.050	.002		.002	.002

1/ CAUTION: The use of any coil voltage less than the rated coil voltage will compromise the operation of the relay.
2/ Over the temperature range,
3/ With rated coil voltage.
4/ From rated coil voltage.

Referenced documents:
MIL-PRF-6106
MIL-STD-461

The margins of this specification are marked with vertical lines to indicate where modifications from this revision were made. This was done as a convenience only and the Government assumes no liability whatsoever for any inaccuracies in these notations. Bidders and contractors are cautioned to evaluate the requirements of this document based on the entire content irrespective of the marginal notations.

Custodian:
Air Force - 85
DLA - CC

Preparing activity:
DLA - CC

(Project 5945-2011-015)

NOTE: The activities listed above were interested in this document as of the date of this document. Since organizations and responsibilities can change, you should verify the currency of the information above using the ASSIST Online database at https://assist.daps.dla.mil/ .