INCH-POUND

MS27706J
08 April 2013
MS27706H
27 November 2003

DETAIL SPECIFICATION SHEET

RELAYS, ELECTROMAGNETIC, 20 AMPERES, 3 PST, MECHANICAL INTERLOCK, (CENTER OFF) LOAD, TRANSFER, TYPE I, HERMETICALLY SEALED

Inactive For New Design After 8 Sep 1995.

This specification is approved for use by all Departments and Agencies of the Department of Defense.

The requirements for acquiring the relay described herein shall consist of this specification and the latest issue of MIL-PRF-6106.

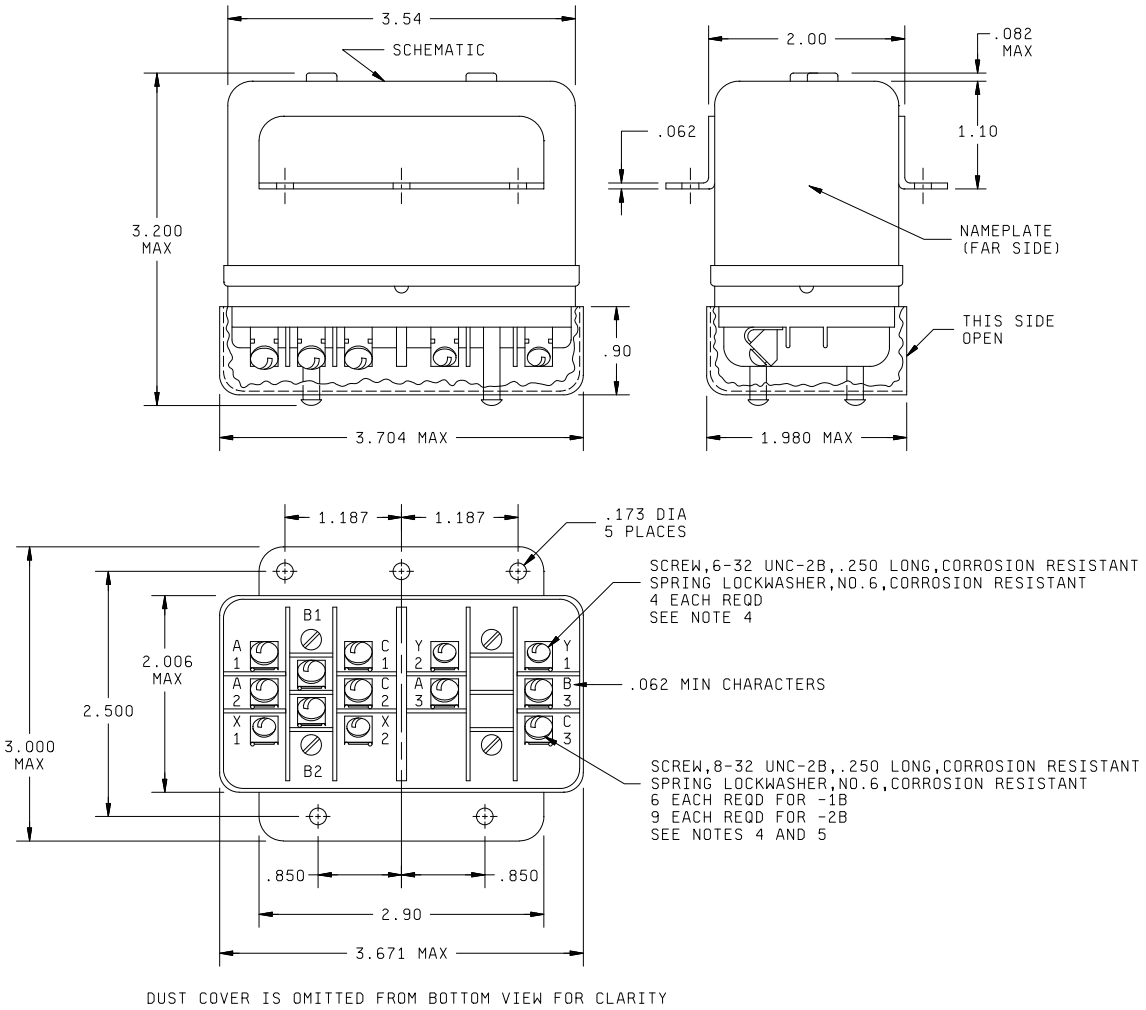

FIGURE 1. Dimensions and configuration.

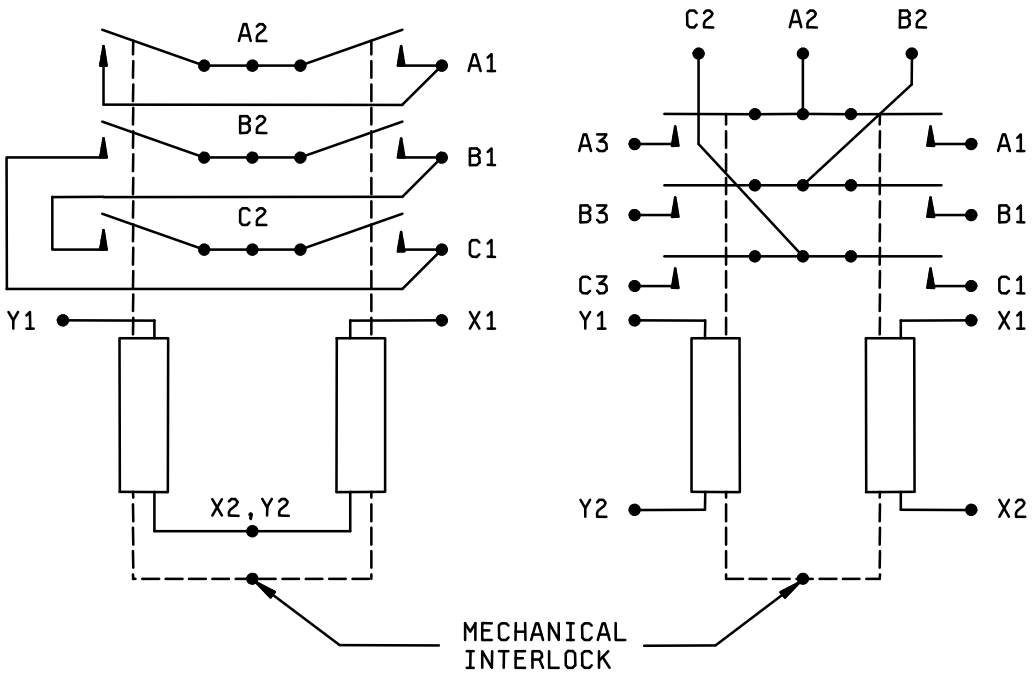

CIRCUIT DIAGRAM
-1B
(3 POLE MOTOR
REVERSING)

CIRCUIT DIAGRAM
-2B
(LOAD TRANSFER)

Inches	mm	Inches	mm
.062	1.57	2.006	50.95
.082	2.08	2.500	63.50
.173	4.39	2.90	73.66
.850	21.59	3.000	76.20
.90	22.89	3.200	81.28
1.10	27.94	3.54	89.92
1.187	30.15	3.671	93.24
1.980	50.29	3.704	94.08
2.00	50.8		

NOTES:
1. Dimensions are in inches.
2. Metric equivalents are given for general information only.
3. Tolerances are ± (0.8 mm) for two place decimals and ±.010 (0.25 mm) for three place decimals.
4. Power terminals are capable of accepting AS25036-153 lugs. Coil terminals are capable of accepting AS25036-107 lugs.
5. A3, B3, and C3 are omitted on - 1B.

FIGURE 1. Dimensions and configurations - Continued.

REQUIREMENTS:

Dimensions and configuration: See figure 1.

Dash numbers and general characteristics: See table I.

Contact data:

Load ratings: See table II.

Maximum contact drop, initial: 0.150 V.

After life test: 0.175 V.

Overload current: 80 amperes dc; 120 amperes ac.

Rupture current: 100 amperes dc; 150 amperes ac.

Coil data: See table III.

Duty rating: Continuous.

Electrical data:

Minimum insulation resistance:

Initial: 100 megohms.

After life or environmental test: 50 megohms.

Dielectric strength:

Sea level, 2-5 seconds:

	Initial	After life tests
Coil to case	1,250 V rms	1,050 V rms
Aux contacts	N/A	N/A
All other points	1,500 V rms	1,125 V rms

Altitude, 1 minute (80,000 feet):

	80,000 ft
Coil to case	500 V rms
Aux contacts	N/A
All other points	500 V rms

Environmental characteristics:

Temperature range: -70°C to +125°C.

Maximum altitude rating: 80,000 feet.

Shock g-level: 25 g's.

Duration: 11 ms.

Max duration contact opening: 2 ms.

Vibration - sinusoidal:

G-level 10 g's.

Frequency range 10 - 1,500 Hz.

Nonoperate:

G-level: 15 g's.

Frequency range: 20 to 2,000 Hz.

Acceleration 15 g's.

Terminal strength (high temperature pull and torque test): Not applicable.

Part or Identifying Number (PIN): MS27706- (plus applicable dash number from table I).

Assurance provisions: Group B and group C testing are not required. The manufacturer shall notify the qualifying activity in the event of any design or construction changes, and shall impose additional testing requirements as necessary.

The Qualified Products List (QPL) associated with this inactive for new design specification will be maintained until acquisition of the product is no longer required, where upon the specification and the QPL will be canceled.

TABLE I. Dash numbers and characteristics.

Dash number MS27706-	Type	Coil		Terminal Type	Mounting method	Max weight in pounds	Circuit type 1/
		X	Y				
-1B	I	dc	dc	Screw	Bracket	1.4	3-pale motor reversing
-2B							Load transfer

1/ See circuit diagrams.

TABLE II. Rated contact load (amperes per pole) case grounded.

Type of load	Life operating cycles x 10^3	28 V dc				115 V ac, phase				115/200 V ac, 3 phase 1/				See appropriate notes
		Main		Aux		Main		Aux		Main		Aux		
		NO	NC	NO	NC	400 Hz	60 Hz	400 Hz	60 Hz	400 Hz	60 Hz	400 Hz	60 Hz	
Resistive	100	20				20	15			20	15			
Inductive	20	15												
Inductive	100					20	20			20	20			
Motor	100	20				20	12			20	12			
Lamp	100	5				5	5			5	5			
Transfer load	10					20				20				2/
Mechanical life reduced current	400	5				5	5			5	5			2/
Mixed loads	Applicable per specification													

1/ Absence of value indicates relay is not rated for 3 phase applications.
2/ Transfer load indicates relay is suitable for transfer between unsynchronized ac power supplies at rating indicated.

TABLE III Operating characteristics.

Part no. MS 27706-	Coil data											Time - (milliseconds maximum)					
	Coil	Nominal			Max		Max pick-up voltage			Hold voltage 2	Drop out voltage 2/	Operate 3/	Release 4/	Contact Bounce			
														Main		Aux	
		Volts 1/	Freq Hz	Ω Res	Volts	Amp	Normal	High temp test	Cont current test					NO	NC	NO	NC
-1B,2B	X-Y	28	DC	N/A	29	0.25	18	19.5	22.5	7.0	1.5	20	1	5	---	---	---

1/ Caution: Use of any coil voltage less than nominal coil voltage will compromise the operation of the relay.
2/ Over the temperature range..
3/ With rated coil voltage.
4/ From rated coil voltage.

NOTES

Changes from previous issue. The margins of this specification are marked with vertical lines to indicate where changes from the previous issue were made. This was done as a convenience only and the Government assumes no liability whatsoever for any inaccuracies in these notations. Bidders and contractors are cautioned to evaluate the requirements of this document based on the entire content irrespective of the marginal notations and relationship to the last previous issue.

Referenced documents. This document references MIL-PRF-6106.

Custodians:
Air Force - 85
DLA - CC

Preparing activity:
DLA - CC

(Project 5945-2012-007)

NOTE: The activities listed above were interested in this document as of the date of this document. Since organizations and responsibilities can change, you should verify the currency of the information above using the ASSIST Online database at https://assist.dla.mil/.