INACTIVE FOR NEW DESIGN AFTER 5 JUN 87
NO SUPERSEDING STANDARD
FOR NEW DESIGN USE MS27400

FED. SUP CLASS
5945

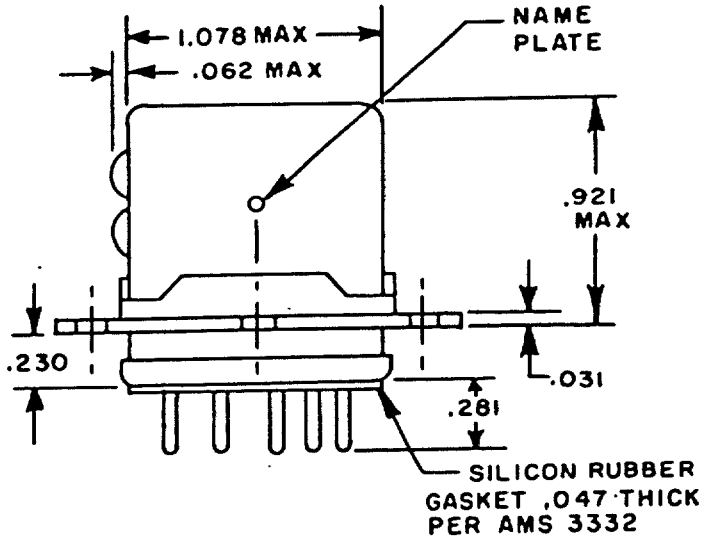

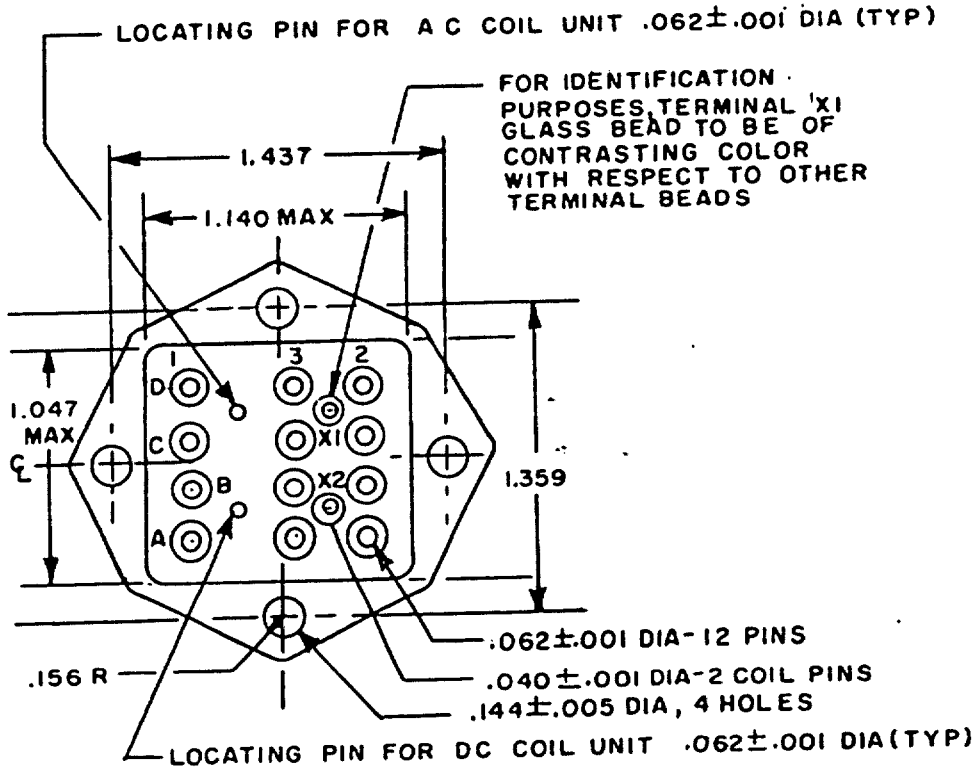

DASH NUMBERS 1 AND 2

(G) denotes changes

APPROVED 30 Oct 1964 REVISED (F) 5 JUN 87 (G) 10 FEB 89

User activities: Army - Navy - Air Force -
Review activities: Army - Navy - Air Force - EC 11, 99

This military standard is approved for use by all Departments and Agencies of the Department of Defense. Selection for all new engineering and design applications and for repetitive use shall be made from this document when applicable.

P.A USAF - 85 Other Cust Navy - AS	International Interest	TITLE RELAYS, ELECTROMAGNETIC, 10 AMPERES, 4PDT, TYPE I, PLUG-IN, HERMETICALLY SEALED	MILITARY STANDARD MS27254
Procurement Specification MIL-R-6106		SUPERSEDES:	PAGE 1 OF 6

DD FORM 1 MAY 73 672 (Coordinated) PREVIOUS EDITIONS OF THIS FORM ARE OBSOLETE.
AMSC N/A

5945-0798-02

DISTRIBUTION STATEMENT A. Approved for public release; distribution is unlimited.

Review activities: Army - Navy - EC Air Force - 11, 99

User activities: Army - Navy - Air Force -

FED. SUP CLASS 5945

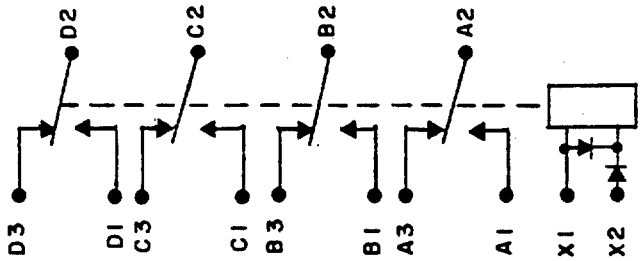

CIRCUIT DIAGRAM (-1)
(SEE NOTE 6)

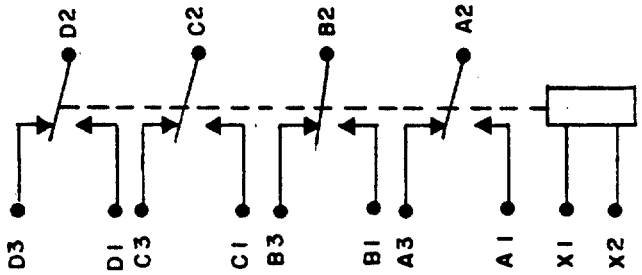

CIRCUIT DIAGRAM (-2)

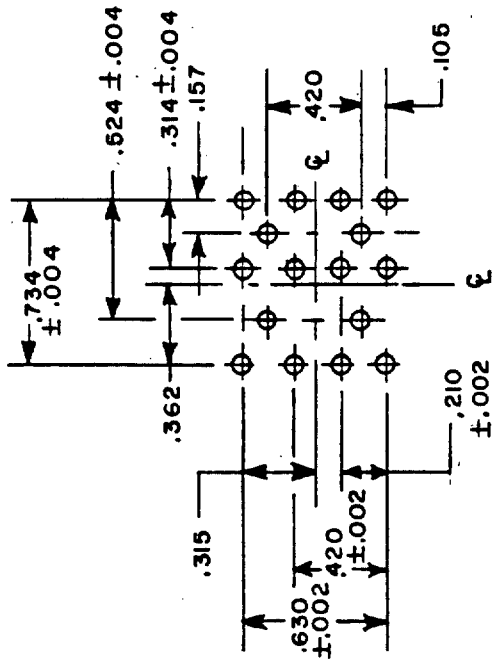

PIN LAYOUT

APPROVED 30 Oct 1964 REVISED (G) For changes see pages 4 and 6

P.A USAF - 85 Other Cust Navy - AS	International interest	TITLE RELAYS, ELECTROMAGNETIC, 10 AMPERES, 4PDT, TYPE I, PLUG-IN, HERMETICALLY SEALED	MILITARY STANDARD MS27254
Procurement Specification MIL-R-6106		SUPERSEDES:	PAGE 2 OF 6

DD FORM 1 MAY 73 672 (Coordinated) PREVIOUS EDITIONS OF THIS FORM ARE OBSOLETE.

Inches	mm	Inches	mm	Inches	mm
.001	0.30	.156	3.96	.630	16.00
.002	0.05	.157	3.99	.734	18.64
.004	0.10	.210	5.33	.921	23.39
.005	0.13	.230	5.84	1.047	27.38
.031	0.79	.281	7.14	1.078	28.58
.040	1.02	.314	7.98	1.140	28.96
.047	1.19	.315	8.00	1.359	34.52
.062	1.57	.362	9.19	1.437	36.50
.105	2.67	.420	10.67		
.144	3.66	.524	13.31		

NOTES:
1. Dimensions are in inches.
2. Metric equivalents are given for general information only.
3. Unless otherwise specified, tolerances are ±.010 (0.25 mm).
4. Terminal numbers need not appear on relay headers provided there is affixed to the relay a suitable legible circuit diagram that identifies each terminal location specified.
5. Pins to be perpendicular to header within one inch.
6. The use of diodes on ac relays is optional. Actual application must be shown on label.
7. In the event of a conflict between the text of this standard and the references cited herein, the text of this standard shall take precedence.
8. Referenced Government documents of the issue listed in that issue of the Department of Defense Index of Specifications and Standards (DODISS) specified in the solicitation form a part of this standard to the extent specified herein.

TABLE I. Dash numbers and characteristics.

Dash number MS27254-	Type	Coil	Terminal type	Max.weight in pounds
1	I	ac	Plug-in	.20
2	I	dc	Plug-in	.20

APPROVED 30 Oct 1964 REVISED (G) For changes see pages 4 and 6

G TABLE II. Operating characteristics

MS part no. MS27254-	Coil data												Time (milliseconds-maximum)					
	Coil	Nominal			Max		Max pick-up voltage			Hold voltage 2/	Drop-out voltage 2/		Operate 3/	Release 4/	Contact bounce			
															Main		Aux	
		Volts 1/	Freq. Hz	Res Ω	Volts	Amperes	Normal 2/	High temp test	Cont current test						NO	NC	NO	NC
1	ac	115	400	N/A	120	.04	90	95	103	30	5		15	30	3	5		
2	dc	28	dc	160	29	.20	18	19.5	22.5	7	1.5		10	10	3	5		

1/ CAUTION: Use of any coil voltage less than nominal coil voltage will compromise the operation of the relay.
2/ Over the temperature range.
3/ With nominal coil voltage.
4/ From nominal coil voltage.

TABLE III. Rated contact load (amperes per pole) case grounded.

Type of load	Life operating cycles X 10^3	28 V dc				115 V ac, 1 phase				115/200 V ac, 3 phase 1/				See appropriate notes
		Main		Aux		Main		Aux		Main		Aux		
		NO	NC	NO	NC	400 Hz	60 Hz	400 Hz	60 Hz	400 Hz	60 Hz	400 Hz	60 Hz	
Resistive	100	10	10			10				10				
Inductive	50	10	10			10				10				
Inductive														
Motor	100	5	5			5				5				2/
Lamp	100	3	3			3				3				2/
Transfer load														3/
Mechanical life reduced current	400	2.5	2.5											
Intmd current	100	Applicable per specification												

1/ Absence of value indicates relay is not rated for 3 phase applications.
2/ 100,000 operations - on NO contacts, and 50,000 operations on NC contacts at 28 V dc.
3/ Transfer load indicates relay suitable for transfer between unsynchronized ac power supples at rating indicated.

Review activities: Army - Navy - EC Air Force - 11, 99

User activities: Army - Navy - Air Force -

Environmental characteristics

Temperature range	-70°C to +125°C
Max altitude rating	80,000 ft
Shock G-level	25 G
Duration	11 ms
Max duration contact opening	10 µs
Vibration - sinusoidal	
G-level	20 G
Frequency range	10 - 2,000 Hz
Vibration - random	
Applicable specification	N/A
Power spectral density	N/A
RMS G min	N/A
Frequency range	N/A
Curve	N/A
High shock	N/A
Acceleration	15 G

Electrical characteristics

Insulation resistance, initial	100 megohms
After life or environmental tests	50 megohms

Dielectric strength (sea level)

	Initial	After life tests
Coil to case	1,000 V rms	1,000 V rms
Aux contacts		
All other points	1,500 V rms	1,125 V rms

Dielectric strength (altitude)

		80,000 ft
Coil to case		250 V rms
Aux contacts		
All other points		350 V rms

Max contact drop initial	0.150 volt
After life test	0.175 volt
Overload current	40 amperes dc, 60 amperes ac
Rupture current	50 amperes dc, 80 amperes ac
Duty rating	Continuous
RFI specification	MIL-STD-461

(Applicable to coil circuits of ac operated relays)

Quality conformance inspection

Performance of groups B and C tests are not applicable.

(G) Group A acceptance reports shall be submitted to the qualifying activity on a yearly basis in order to retain qualification for this military standard sheet.

FED. SUP CLASS 5945

P.A USAF - 85
Other Cust Navy - AS
International interest
Procurement Specification MIL-R-6106
TITLE RELAYS, ELECTROMAGNETIC, 10 AMPERES, 4PDT, TYPE I, PLUG-IN, HERMETICALLY SEALED
SUPERSEDES:
MILITARY STANDARD
MS27254

APPROVED 30 Oct 1964 REVISED (G) For changes see pages 4 and 6