Downloaded from http://www.everyspec.com

INCH-POUND

MS27129D
20 January 2012
SUPERSEDING
MS27129C
18 August 1987

DETAIL SPECIFICATION SHEET

WASHER, FINISHING - COUNTERSUNK

Inactive for new design after 3 February 2000.

This specification sheet is approved for use by all Departments and Agencies of the Department of Defense.

The requirements for acquiring the product described herein shall consist of this specification sheet and procurement specification NASM45595.

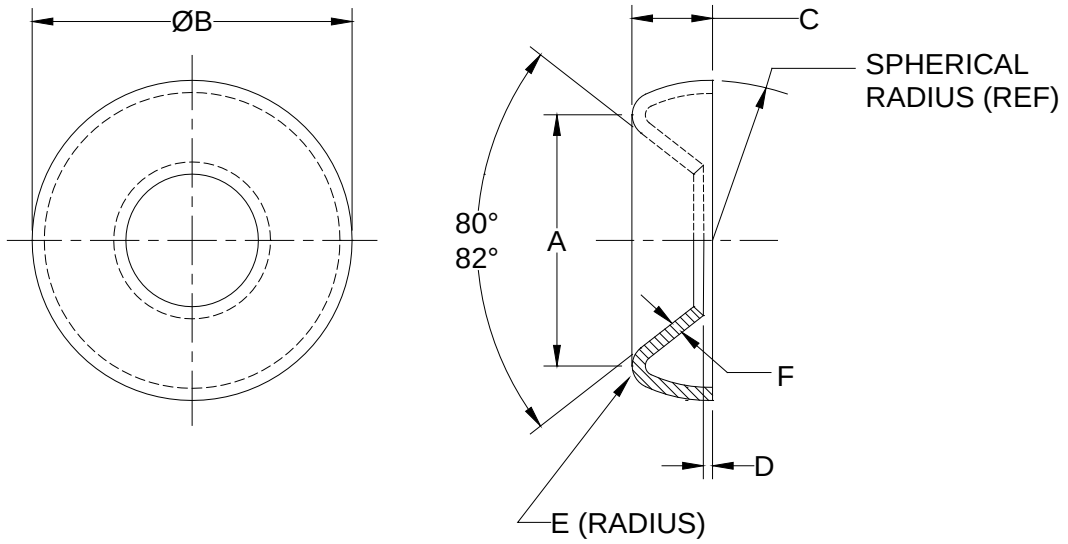

FIGURE 1. Washer, Finishing-Countersunk.

Downloaded from http://www.everyspec.com

TABLE I. Dash numbers and dimensions

DASH NUMBER			NOM SIZE	A		∅B		C		D		E		F
BRASS	STEEL	CRES		MAX	MIN	MAX	MIN	MAX	MIN	MAX	MIN	MAX	MIN	±.003
1	2	3	.112	.247	.237	.385	.365	.096	.076	.036	.015	.027	.021	.012
4	5	6	.138	.303	.293	.448	.428	.102	.082	.036	.015	.031	.025	.014
7	8	9	.164	.357	.347	.541	.521	.112	.092	.036	.015	.031	.025	.014
10	11	12	.190	.437	.412	.603	.583	.122	.102	.036	.015	.040	.032	.018
13 1/	14 1/	15 1/	.216	.470	.455	.697	.677	.156	.136	.051	.031	.040	.032	.018
16	17	18	.250	.546	.526	.791	.771	.170	.150	.051	.031	.040	.032	.018
19	20	21	.3125	.678	.658	.947	.927	.222	.202	.051	.031	.044	.036	.020
22	23	24	.375	.810	.785	1.135	1.115	.260	.240	.051	.031	.055	.045	.025

1/ Inactive for new design after 20 March 1974.

Requirements:

1. Material. Brass, in accordance with ASTM B36/B36M, UNS C26000 or UNS C26800, quarter or half hard. Steel, in accordance with ASTM A108, grade 1018 (UNS G10180) or grade 1212 (UNS G12120) or ASTM A510, Grade 1020 (UNS G10200)
   Corrosion-resisting steel, in accordance with ASTM A666 for cold worked grades, ASTM A693 for precipitation hardening grades and ASTM A240/A240M for all other grades.

2. Protective coating. Brass-nickel plated, in accordance with SAE AMS-QQ-N-290, Class 1, or Chromium plated in accordance with SAE AMS-QQ-C-320, Class 1.

   Steel – cadmium plate in accordance with SAE AMS-QQ-P-416, Type II, Class 3.
   Corrosion-resistant steel, descaled and passivated in accordance with ASTM A380

3. Hardness. Washers shall be 104 HB minimum.

4. Part number. The part number shall consist of the basic MS number, followed by a dash number from Table I.

Example: MS27129 – 3

Dash number from Table 1

Basic MS number

MS27129-3 indicates - Washer, finishing countersunk; CRES, passivated, nominal size .112; .385 maximum outside diameter; .012 thickness.

Notes:

1. All dimensions in inches.

2. Remove all burrs and sharp edges before finish.

3. These washers can be used with both 82° and 100° countersunk screws..

4. In the event of a conflict between the text of this standard and the references cited herein, the text of this standard shall take precedence.

Downloaded from http://www.everyspec.com

5. Referenced government (or non-government) documents of the issue listed in that issue of the Department of Defense Index of Specifications and Standards (DODISS) specified in the solicitation form a part of this standard to the extent specified herein.

6. Changes from previous issue: Marginal notations are not used in this revision to identify changes with respect to the previous issue due to the extent of the changes.

Custodians:
Army - AR
Navy - AS
Air Force - 99

Preparing activity:
DLA - IS

(Project 5310-2011-002)

NOTE: The activities listed above were interested in this document as of the date of this document. Since organizations and responsibilities can change, you should verify the currency of the information above using the ASSIST Online database at https://assist.daps.dla.mil.