INCH-POUND

MS27065F
7 October 2013
SUPERSEDING
MS27065E
24 September 2003

DETAIL SPECIFICATION SHEET

ELBOW SUBASSEMBLY, FLARED, 90°, SWIVEL NUT

This specification sheet is approved for use by all Departments and Agencies of the Department of Defense.

The requirements for acquiring the product described herein shall consist of this specification sheet and MIL-DTL-27272.

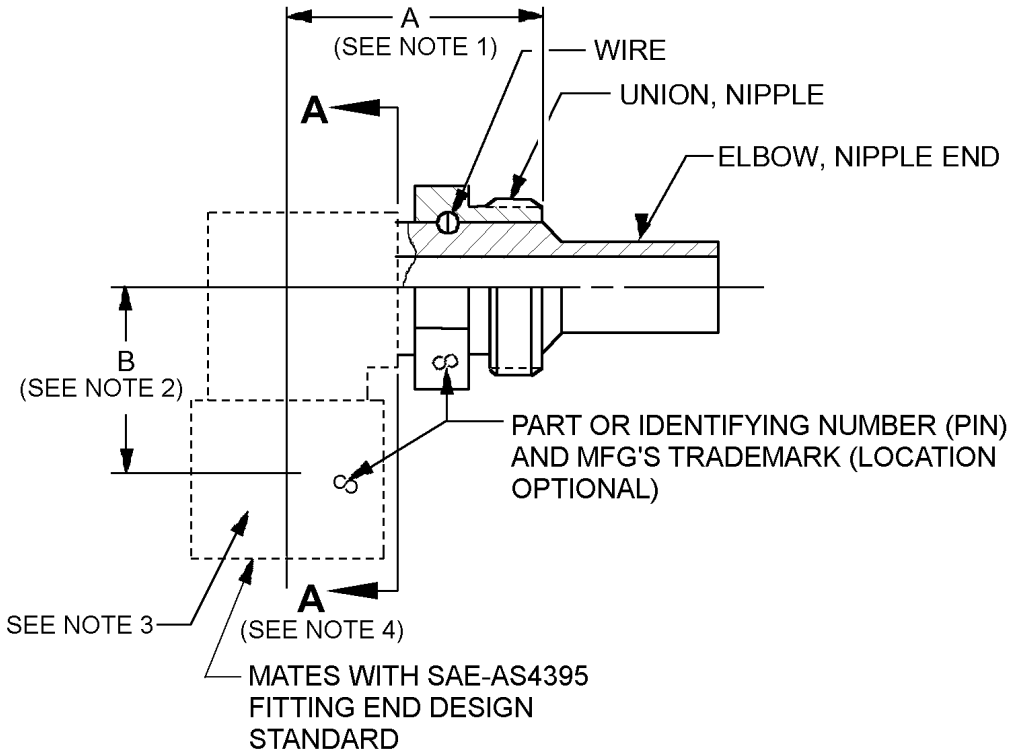

NOTES:

1. Dimension A, see table II, is measured between the hose end of the threaded section of the union and the centerline of the insert.
2. Dimension B, see table II, is measured between the centerline of the nipple and the free end of the insert.
3. Lockwire holes if required in accordance with SAE-AS1043.
4. Any bent tube design of adapter components to the left of plane A-A is acceptable provided that requirements of this specification sheet and the procurement specification are met.

FIGURE 1. Elbow subassembly illustration.

REQUIREMENTS

Elbow subassembly illustration. See figure 1.

Intended use. This part is a component of MS27057.

The inside diameter (ID) of the elbow shall not be less than the ID of the nipple. Ovality shall not exceed 7.5 percent of the nominal tubing outside diameter. The minimum wall thickness at the elbow bend shall not be less than .034 inch (0.08 mm) for sizes -10 through -20, and .044 inch (1.12 mm) for size -24.

Materials. Material and material codes see table I. See applicable specification sheet and MIL-DTL-27272 for material of other components identified in table II for their material requirements.

TABLE I. Materials and material codes.

Material code	Material
Blank	Combination of aluminum alloy and corrosion-resistant steel (CRES)
C	CRES

TABLE II. Elbow subassembly composition. 1/ 2/

Size and material code	Wire size and material code	Union, nipple size and material code	Elbow, nipple end size and material code	A 3/ ±.035 inch (mm)	B 3/ ±.035 inch (mm)
MS27065	MS27072 4/	MS27071 4/ 5/	MS27086 4/ 5/		
-10C	-10C	-10C	-10C	1.315 (33.40)	1.126 (28.60)
-10		-10D	-10D		
-12C	-12C	-12C	-12C	1.808 (45.92)	1.376 (34.95)
-12		-12D	-12D		
-16C	-16C	-16C	-16C	1.901 (48.29)	1.500 (38.10)
-16		-16D	-16D		
-20C	-20C	-20C	-20C	2.180 (55.37)	1.782 (45.26)
-20		-20D	-20D		
-24C	-24C	-24C	-24C	2.500 (63.50)	2.032 (51.61)
-24		-24D	-24D		

1/ Dimensions are in inches.
2/ Metric equivalents are given for information only.
3/ See figure 1.
4/ MS27071, MS27072 and MS27086 shall be dry film lubricated in accordance with table III, dry film is applied in accordance with MS27071, MS27072 or MS27086 as applicable.
5/ Material code “D” aluminum alloy.

If required, lockwire holes to be drilled in accordance with SAE-AS1043 and suffix L added to added to the Part or Identifying Number (PIN).

MS27071, MS27072 and MS27086 parts shall be coated with the same type of dry film lubricant as indicated in the PIN, no mixing of dry film lubricants shall be used on an assembly unless it is of the types specified by the “blank” designator.

NOTE: Avoid using graphite dry film lubes with aluminum unions and nipples because in a wet environment, graphite becomes corrosive to the aluminum.

TABLE III. Dry film designator.

Dry film designator	SAE class or type designator	Dry film characteristics
Blank	Any SAE class or type below	N/A
SAE-AS1701	SAE-AS1701 class	SAE-AS1701 temperature ranges °F (°C)
4	4	-65° to +1400°F (-54° to 760°C)
5	5	-65° to +850°F (-54° to 454°C)
6	6	-375° to +850°F (-226° to 454°C)
SAE-AS5272	SAE-AS5272 type	SAE-AS5272 temperature ranges. °F (°C)
7	Type I	-90° to 400°F (-68° to 204°C) endurance life of 250 min minimum
8	Type II	-90° to 400°F (-68° to 204°C) endurance life of 450 min minimum
9	Type III	Color 1 - Natural product color -90° to 400°F (-68° to 204°C) low Volatile organic compound with an endurance life of 450min minimum
10	Type III	Color 2 - Black color -90° to 400°F (-68° to 204°C) low volatile organic compound with an endurance life of 450 min minimum
Dry film designator	MIL classification	Dry film characteristics
MIL-PRF-46010 1/	---	MIL-PRF-46010 temperature ranges. °F (°C)
11	1	Color 1 natural product color, -90° to 400°F (-68° to 204°C) solvent resisting
12	2	Color 2 - Black color -90° to 400°F (-68° to 204°C) solvent resisting

1/ Not for aerospace usage.

PIN: The PIN consists of prefix “MS”, the specification sheet number, dash, number for 90° elbow subassembly size, letter for material, blank or L for lockwire holes, and a blank or number for dry film lubricant. Unassigned PIN’s shall not be used.

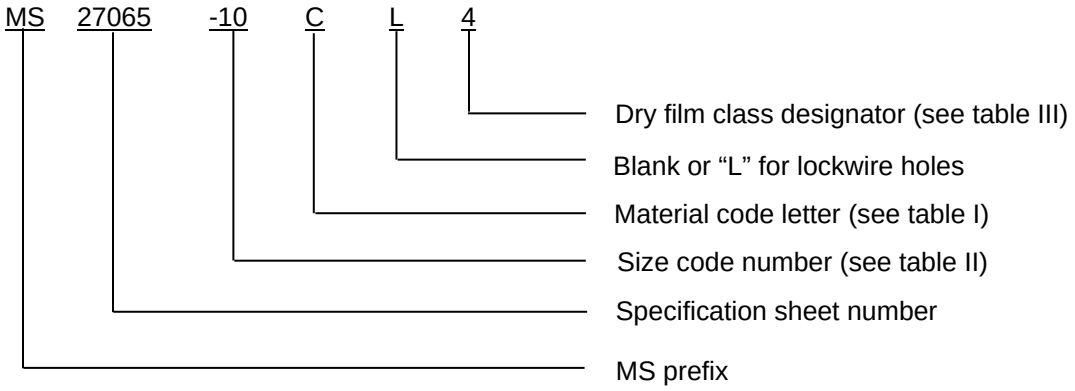

PIN examples:

MS27065-10	indicates a 90° elbow subassembly size 10, a combination of aluminum and CRES, and with dry film class designator “blank”.
MS27065-10CL	indicates a 90° elbow subassembly size 10, CRES with lockwire holes, and dry film class designator “blank”.
MS27065-10C4	indicates a 90° elbow subassembly size 10, CRES with dry film class designator 4.

Identification of product. The PIN and the manufacturer’s CAGE code or manufacturer’s trademark shall be permanently marked on the elbow subassembly.

Order of precedence. Unless otherwise noted herein or in the contract, in the event of a conflict between the text of this document and the references cited herein, the text of this document takes precedence. Nothing in this document, however, supersedes applicable laws and regulations unless a specific exemption has been obtained.

Referenced documents shall be of the issue in effect on date of invitations for bid.

Changes from previous issue. Marginal notations are not used in this revision to identify changes with respect to the previous issue, due to the extent of the changes.

Referenced documents. In addition to MIL-DTL-27272, this document references the following:

MIL-PRF-46010	SAE-AS1043
MS27057	SAE-AS1701
MS27071	SAE-AS4395
MS27072	SAE-AS5272
MS27086	

CONCLUDING MATERIAL

Custodians:
Army - AV
Navy - AS
Air Force - 99
DLA - CC

Review activities:
Army - AR, AT, MI
Navy - MC, SA, SH
Air Force - 71

Preparing activity:
DLA - CC

(Project 4730-2013-102)

NOTE: The activities listed above were interested in this document as of the date of this document. Since organizations and responsibilities can change, you should verify the currency of the information above using the ASSIST Online database at https://assist.dla.mil.