Downloaded from http://www.everyspec.com

INCH-POUND

MS27039F
15 NOVEMBER 1995
SUPERSEDING
MS27039E
24 JANUARY 1995

MILITARY SPECIFICATION SHEET

SCREW, MACHINE - PAN HEAD, STRUCTURAL, CROSS RECESSED

This Specification is approved for use by all Departments and Agencies of the Department of Defense.

The requirements for acquiring the product described herein shall consist of this specification sheet and the issue of the following specification listed in that issue of the Department of Index of Specifications and Standards (DODISS) specified in the solicitation: MIL-S-7839

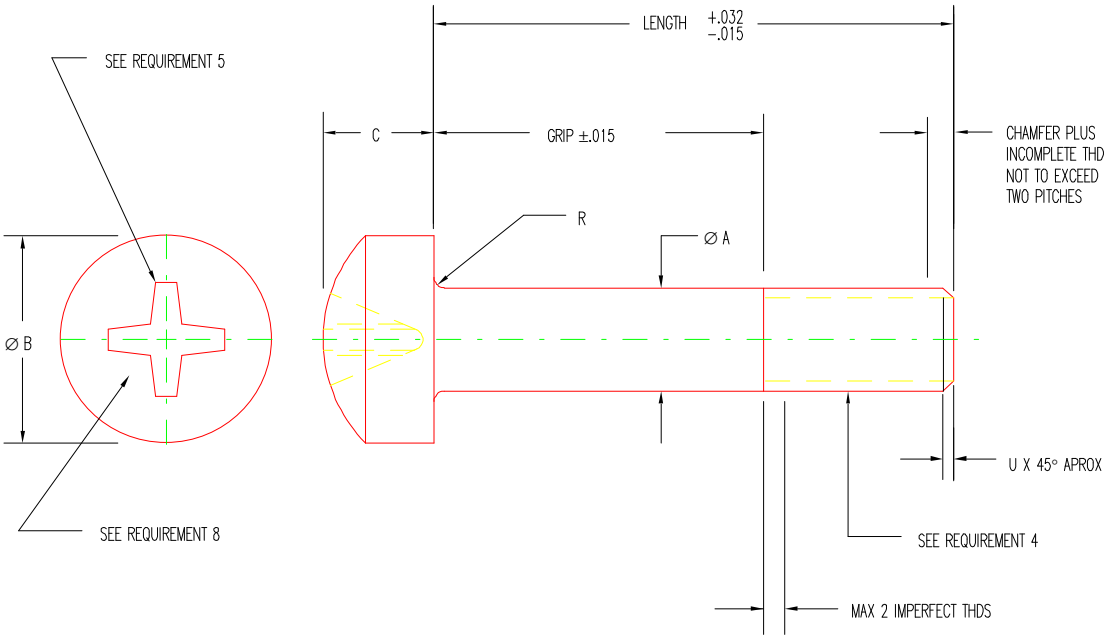

Figure 1. Dimensions and configurations.

DISTRIBUTION STATEMENT A. Approved for public release; distribution is unlimited.

Downloaded from http://www.everyspec.com

NOTES:

1. All dimensions are in inches.
2. Screws shall be free from burrs and sharp edges.
3. Dimensions are to be met after plating.
4. Shank diameter may be .001 oversize for a maximum distance of .031 adjacent to the head.
5. In the event a conflict between the text of this document and the references cited herein, the text of this document will take precedence.
6. Unless otherwise specified, issues of referenced documents are those in effect at the time of solicitation.
7. Caution should be taken during plating process. The contractor shall be responsible for the safe reutilization and disposal of all materials generated by this process in accordance with ASTM A380, section 8.2 and 8.7.
8. Items manufactured to Rev. C and Rev. D may be delivered from suppliers stock until depletion.

REQUIREMENTS:

1. Material:

   Aluminum Alloy 2024 (UNS A92024) in accordance with QQ-A-430, Temper 2024-D, or QQ-A-225/6, Temper T4.
   Manganese Bronze (UNS C67000) in accordance with ASTM B138.
   Alloy Steel 8630 (UNS G86300) in accordance with MIL-S-7839, 26-32 HRC or 8740 (UNS G87400), 4130 (UNS G41300) in accordance with MIL-S-6049.
   Heat and Corrosion-Resistant Steel, A286 Iron Base Super Alloy (UNS S66286) in accordance with AMS 5731 or AMS 5732.

2. Protective coating and surface treatment:

   Aluminum Alloy: Anodize, in accordance with MIL-A-8625, Type I or II.
   Manganese Bronze: Cadmium Plate, in accordance with QQ-P-416, Type II, Class 3.
   Manganese Bronze: uncoated.
   Alloy Steel: Cadmium Plate, in accordance with QQ-P-416, Type II, Class 2.
   Heat and Corrosion-Resistant Steel: Passivate in accordance with QQ-P-35 after removal of all oil and grease. Passivation verification test per Method 102 of MIL-STD-753.

3. Tensile strength:

   Aluminum Alloy: 62,000 psi min ultimate tensile strength.
   Manganese Bronze: 85,000 psi min ultimate tensile strength.
   Alloy Steel: 125,000 to 145,000 psi ultimate tensile strength.
   Heat and Corrosion-Resistant Steel: 130,000 psi min ultimate tensile strength.

4. Threads:

   Threads shall be accordance with FED-STD-H28/2. Acceptability of screw threads shall be in accordance with FED-STD-H28/20, system 21.

5. Recess:

   The recess shall be in accordance with MS9006.

6. Material and finish code:

   Add DD before dash number for Anodized Aluminum Alloy Screw.
   Add BP before dash number for Cadmium Plated Manganese Screw.
   Add B before dash number for uncoated Manganese Bronze Screw.
   Add - before dash number for Cadmium Plated Alloy Steel Screw.
   Add C before dash number for Heat and Corrosion-Resistant Steel Screw.

Downloaded from http://www.everyspec.com

7. Part number:

The part number shall consist of the basic MS number followed by the material and finish code followed by the dash number.

Example: MS27039DD0809 indicates - Screw, Machine - Pan Head Structural, Cross Recessed; .164-32 UNC-3A, .594 length, Anodized Aluminum Alloy Screw.

MS27039BP 0809 indicates - Screw, Machine - Pan Head Structural, Cross Recessed; .164-32 UNC-3A, .594 length, Cadmium Plated Manganese Screw.

MS27039B0809 indicates - Screw, Machine - Pan Head Structural, Cross Recessed; .164-32 UNC-3A, .594 length, uncoated Manganese Bronze Screw.

MS27039 - 0809 indicates - Screw, Machine - Pan Head Structural, Cross Recessed; .164-32 UNC-3A, .594 length, Cadmium Plated Alloy Steel Screw.

MS27039C0809 indicates - Screw, Machine - Pan Head Structural, Cross Recessed; .164-32 UNC-3A, .594 length, Heat and Corrosion-Resistant Steel Screw.

8. Head marking:

a. Basic part no. and applicable dash no. (Basic part optional for .164-32 screw sizes).
b. Material as follows: Aluminum Alloy - none, Bronze - “B”, Alloy Steel - “-”, Heat and Corrosion-Resistant Steel -”C”.
c. Manufacturer’s trade-mark shall be added, location optional.

Table I. Dimensions

Thread	∅A		∅B		C		R Rad		U	Max Eccentricity	
										Head to Shank Fim	Recess to Shank Fim
	Max	Min	Max	Min	Max	Min	Max	Min			
.164-32 UNC-3A	.1640	.1610	.322	.306	.115	.105				.020	.016
.190-32 UNF-3A	.1890	.1860	.373	.357	.133	.122				.024	.020
.250-28 UNF-3A	.2490	.2460	.492	.473	.175	.162	.020	.010	.032	.030	.024
.3125-24 UNF-3A	.3115	.3085	.615	.594	.218	.203				.036	
.375-24 UNF-3A	.3740	.3710	.740	.716	.261	.244				.042	
.4375-20 UNF-3A	.4365	.4325	.868	.838	.304	.286	.025	.015	.047	.048	.030
.500-20 UNF-3A	.4990	.4950	.987	.958	.348	.327	.030	.020		.056	

Table II. Mechanical Properties

Thread	Ultimate Tensile Load Pounds-Min 1_/				Ultimate Double Shear Load Pounds Min 2_/			
	Alum Alloy	Manganese Bronze	Alloy Steel	Cres	Alum Alloy	Manganese Bronze	Alloy Steel	Cres
.164-32 UNC-3A	868	1,190	1,750	1,750	1,570	2,150	3,170	3,170
.190-32 UNF-3A	1,240	1,700	2,500	2,500	2,110	2,890	4,250	4,250
.250-28 UNF-3A	2,260	3,090	4,550	4,550	3,650	5,010	7,360	7,360
.3125-24 UNF-3A	3,600	4,930	7,250	7,250	5,700	7,820	11,500	11,500
.375-24 UNF-3A	5,440	7,460	11,000	11,000	8,220	11,300	16,600	16,600
.4375-20 UNF-3A	7,360	10,100	14,800	14,800	11,200	15,300	22,500	22,500
.500-20 UNF-3A	9,900	13,600	20,000	20,000	14,700	20,000	29,400	29,400

1_/ Based on 62,000 PSI for Alum Alloy, 85,000 PSI for Manganese Bronze, 125,000 PSI for Alloy Steel, 125,000 PSI for Corrosion-Resistant Steel. The stress areas used for the calculations of the tensile load values are listed on FED-STD-H28/2.

2_/ Based on 60% of the minimum ultimate tensile strength at nominal shank diameter times two.

Downloaded from http://www.everyspec.com

Table III. Dash numbers and Dimensions.

Thread											
.164-32 UNC-3A			.190-32 UNF-3A			.250-28 UNF-3A			.3125-24 UNF-3A		
Dash No	Length	Grip	Dash No	Length	Grip	Dash No	Length	Grip	Dash No	Length	Grip
0804	.281		1 - 04	.281		4 - 04	.281				
0805	.344		1 - 05	.344		4 - 05	.344		5 - 05	.359	
0806	.406	1_/	1 - 06	.406	1_/	4 - 06	.406	1_/	5 - 06	.422	
0807	.469		1 - 07	.469		4 - 07	.469		5 - 07	.484	1_/
0808	.531	.094	1 - 08	.531	.062	4 - 08	.531		5 - 08	.547	
0809	.594	.156	1 - 09	.594	.125	4 - 09	.594	.062	5 - 09	.609	
0810	.656	.219	1 - 10	.656	.188	4 - 10	.656	.125	5 - 10	.672	.094
0811	.719	.281	1 - 11	.719	.250	4 - 11	.719	.188	5 - 11	.734	.156
0812	.781	.344	1 - 12	.781	.312	4 - 12	.781	.250	5 - 12	.797	.219
0813	.844	.406	1 - 13	.844	.375	4 - 13	.844	.312	5 - 13	.859	.281
0814	.906	.469	1 - 14	.906	.438	4 - 14	.906	.375	5 - 14	.922	.344
0815	.969	.531	1 - 15	.969	.500	4 - 15	.969	.438	5 - 15	.984	.406
0816	1.031	.594	1 - 16	1.031	.563	4 - 16	1.031	.500	5 - 16	1.047	.469
0817	1.094	.656	1 - 17	1.094	.625	4 - 17	1.094	.563	5 - 17	1.109	.531
0818	1.156	.719	1 - 18	1.156	.688	4 - 18	1.156	.625	5 - 18	1.172	.594
0819	1.219	.781	1 - 19	1.219	.750	4 - 19	1.219	.688	5 - 19	1.234	.656
0820	1.281	.844	1 - 20	1.281	.813	4 - 20	1.281	.750	5 - 20	1.297	.719
0821	1.344	.906	1 - 21	1.344	.875	4 - 21	1.344	.813	5 - 21	1.359	.781
0822	1.406	.969	1 - 22	1.406	.938	4 - 22	1.406	.875	5 - 22	1.422	.844
0823	1.469	1.031	1 - 23	1.469	1.000	4 - 23	1.469	.938	5 - 23	1.484	.906
0824	1.531	1.094	1 - 24	1.531	1.062	4 - 24	1.531	1.000	5 - 24	1.547	.969
0825	1.594	1.156	1 - 25	1.594	1.125	4 - 25	1.594	1.062	5 - 25	1.609	1.031
0826	1.656	1.219	1 - 26	1.656	1.188	4 - 26	1.656	1.125	5 - 26	1.672	1.094
0827	1.719	1.281	1 - 27	1.719	1.250	4 - 27	1.719	1.188	5 - 27	1.734	1.156
0828	1.781	1.344	1 - 28	1.781	1.312	4 - 28	1.781	1.250	5 - 28	1.797	1.219
0829	1.844	1.406	1 - 29	1.844	1.375	4 - 29	1.844	1.312	5 - 29	1.859	1.281
0830	1.906	1.469	1 - 30	1.906	1.438	4 - 30	1.906	1.375	5 - 30	1.922	1.344
0831	1.969	1.531	1 - 31	1.969	1.500	4 - 31	1.969	1.438	5 - 31	1.984	1.406
0832	2.031	1.594	1 - 32	2.031	1.563	4 - 32	2.031	1.500	5 - 32	2.047	1.469
0833	2.094	1.656	1 - 33	2.094	1.625	4 - 33	2.094	1.563	5 - 33	2.109	1.531
0834	2.156	1.719	1 - 34	2.156	1.688	4 - 34	2.156	1.625	5 - 34	2.172	1.594
0835	2.219	1.781	1 - 35	2.219	1.750	4 - 35	2 219	1.688	5 - 35	2.234	1.656
0836	2.281	1.844	1 - 36	2.281	1.813	4 - 36	2.281	1.750	5 - 36	2.297	1.719
0837	2.344	1.906	1 - 37	2.344	1.875	4 - 37	2.344	1.813	5 - 37	2.359	1.781
0838	2.406	1.969	1 - 38	2.406	1.938	4 - 38	2.406	1.875	5 - 38	2.422	1.844
			1 - 39	2.469	2.000	4 - 39	2.469	1.938	5 - 39	2.484	1.906
			1 - 40	2.531	2.062	4 - 40	2.531	2.000	5 - 40	2.547	1.969
			1 - 41	2.594	2.125	4 - 41	2.594	2.062	5 - 41	2.609	2.031
			1 - 42	2.656	2.188	4 - 42	2.656	2.125	5 - 42	2.672	2.094
			1 - 43	2.719	2.250	4 - 43	2.719	2.188	5 - 43	2.734	2.156
			1 - 44	2.781	2.312	4 - 44	2.781	2.250	5 - 44	2.797	2.219
			1 - 45	2.844	2.375	4 - 45	2.844	2.312	5 - 45	2.859	2.281
			1 - 46	2.906	2.438	4 - 46	2.906	2.375	5 - 46	2.922	2.344
			1 - 47	2.969	2.500	4 - 47	2.969	2.438	5 - 47	2.984	2.406
			1 - 48	3.031	2.563	4 - 48	3.031	2.500	5 - 48	3.047	2.469
			1 - 49	3.094	2.626						
			1 - 50	3.156	2.688						
			1 - 51	3.219	2.751						
			1 - 52	3.281	2.813						
			1 - 53	3.344	2.876						
			1 - 54	3.406	2.938						
			1 - 55	3.469	3.000						
			1 - 56	3.531	3.063						

Downloaded from http://www.everyspec.com

1_/ Short screws listed above lines shall be threaded to within .032 $^{+.032}_{-.000}$ of the head.

Table III. Dash Numbers and Dimensions. - continued

Thread								
.375-24 UNF-3A			.4375-20 UNF-3A			.500-20 UNF-3A		
Dash No	Length	Grip	Dash No	Length	Grip	Dash No	Length	Grip
6 - 05	.406							
6 - 06	.469		7 - 06	.453		8 - 06	.453	
6 - 07	.531		7 - 07	.516		8 - 07	.516	
6 - 08	. 594	1_/	7 - 08	.578	1_/	8 - 08	.578	1_/
6 - 09	.656		7 - 09	.641		8 - 09	.641	
6 - 10	.719		7 - 10	.703		8 - 10	.703	
6 - 11	.781	.094	7 - 11	.766	.062	8 - 11	.766	
6 - 12	.844	.156	7 - 12	.828	.125	8 - 12	.828	
6 - 13	.906	.219	7 - 13	.891	.188	8 - 13	.891	.062
6 - 14	.969	.281	7 - 14	.953	.250	8 - 14	.953	.125
6 - 15	1.031	.344	7 - 15	1.016	.312	8 - 15	1.016	.188
6 - 16	1.094	.406	7 - 16	1.078	.375	8 - 16	1.078	.250
6 - 17	1.156	.469	7 - 17	1.141	.438	8 - 17	1.141	.312
6 - 18	1.219	.531	7 - 18	1.203	.500	8 - 18	1.203	.375
6 - 19	1.281`	.594	7 - 19	1.266	.563	8 - 19	1.266	.438
6 - 20	1.344	.656	7 - 20	1.328	.625	8 - 20	1.328	.500
6 - 21	1.406	.719	7 - 21	1.391	.688	8 - 21	1.391	.563
6 - 22	1.469	.781	7 - 22	1.453	.750	8 - 22	1.453	.625
6 - 23	1.531	.844	7 - 23	1.516	.813	8 - 23	1.516	.688
6 - 24	1.594	.906	7 - 24	1.578	.875	8 - 24	1.578	.750
6 - 25	1.656	.969	7 - 25	1.641	.938	8 - 25	1.641	.813
6 - 26	1.719	1.031	7 - 26	1.703	1.000	8 - 26	1.703	.875
6 - 27	1.781	1.094	7 - 27	1.766	1.062	8 - 27	1.766	.938
6 - 28	1.844	1.156	7 - 28	1.828	1.125	8 - 28	1.828	1.000
6 - 29	1.906	1.219	7 - 29	1.891	1.188	8 - 29	1.891	1.062
6 - 30	1.969	1.281	7 - 30	1.953	1.250	8 - 30	1.953	1.125
6 - 31	2.031	1.344	7 - 31	2.016	1.312	8 - 31	2.016	1.188
6 - 32	2.094	1.406	7 - 32	2.078	1.375	8 - 32	2.078	1.250
6 - 33	2.156	1.469	7 - 33	2.141	1.438	8 - 33	2.141	1.312
6 - 34	2.219	1.531	7 - 34	2.203	1.500	8 - 34	2.203	1.375
6 - 35	2.281	1.594	7 - 35	2.266	1.563	8 - 35	2.266	1.438
6 - 36	2.344	1.656	7 - 36	2.328	1.625	8 - 36	2.328	1.500
6 - 37	2.406	1.719	7 - 37	2.391	1.688	8 - 37	2.391	1.563
6 - 38	2.469	1.781	7 - 38	2.453	1.750	8 - 38	2.453	1.625
6 - 39	2.531	1.844	7 - 39	2.516	1.813	8 - 39	2.516	1.688
6 - 40	2.594	1.906	7 - 40	2.578	1.875	8 - 40	2.578	1.750
6 - 41	2.656	1.969	7 - 41	2.641	1.938	8 - 41	2.641	1.813
6 - 42	2.719	2.031	7 - 42	2.703	2.000	8 - 42	2.703	1.875
6 - 43	2.781	2.094	7 - 43	2.766	2.062	8 - 43	2.766	1.938
6 - 44	2.844	2.156	7 - 44	2.828	2.125	8 - 44	2.828	2.000
6 - 45	2.906	2.219	7 - 45	2.891	2.188	8 - 45	2.891	2.062
6 - 46	2.969	2.281	7 - 46	2.953	2.250	8 - 46	2.953	2.125
6 - 47	3.031	2.344	7 - 47	3.016	2.312	8 - 47	3.016	2.188
6 - 48	3.094	2.406	7 - 48	3.078	2.375	8 - 48	3.078	2.250

1_/ Short screws listed above lines shall be threaded to within .032 $^{+.032}_{-.000}$ of the head.

Downloaded from http://www.everyspec.com

Custodians:
Army - AR
Navy - AS
Air Force - 99

Review activities:
Army - AV, ME, MI
Air Force - 82
NA

Preparing activity:
DLA - IS

(Project 5305-2112)