FED. SUP CLASS
6210

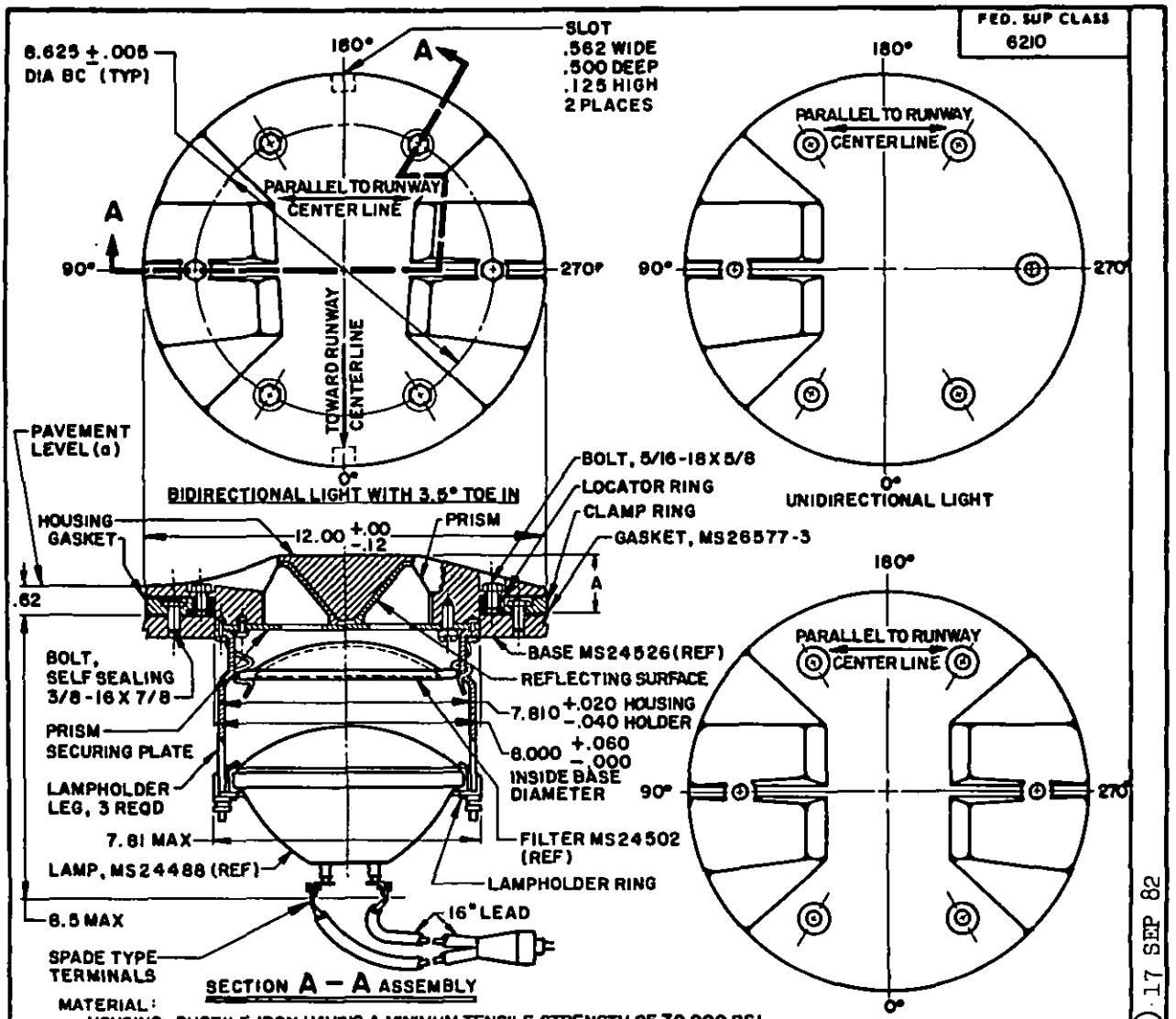

MATERIAL:
HOUSING; DUCTILE IRON HAVING A MINIMUM TENSILE STRENGTH OF 70,000 PSI A MINIMUM YIELD STRENGTH OF 50,000 PSI, A MINIMUM ELONGATION OF 12% AND A BRINELL HARDNESS OF NOT LESS THAN 166, OR FORGED STEEL NO. 4130 IN ACCORDANCE WITH ASTM A-304 HEAT TREATED TO 180,000 PSI ULTIMATE TENSILE STRENGTH WITH MINIMUM ELONGATION OF 6%, OR CAST STAINLESS STEEL IN ACCORDANCE WITH AERONAUTICAL MATERIALS SPECIFICATION 5344.
LOCATOR AND CLAMP RING; MALLEABLE IRON OR STEEL.
ALL OTHER PARTS; ALLOY STEEL-CHROME 18-20%, NICKEL 8-12%, CARBON .08% MAX.

CHARACTERISTICS (WITH MS24488-1 LAMP)					
LIGHT WITHOUT FILTER				BEAM	
DASH NO.	CLASS	TYPE	A MAX (INCHES	TOE IN ANGLE(DEGREES)	ELEVATION ANGLE(DEGREES)
-BB45	BB45	BIDIRECTIONAL	1.12	0	1.5
-BB55	BB55	UNIDIRECTIONAL	1.12	0	1.5
- B15	B15	BIDIRECTIONAL	1.62	3.5	4.5
- B25	B25	UNIDIRECTIONAL	1.62	0	4.5
-BB25	BB25	UNIDIRECTIONAL	1.12	0	3.0

(a) SEE PROJECTION TABLE ON SHEET 3.
DIMENSIONS IN INCHES. UNLESS OTHERWISE SPECIFIED, TOLERANCES: DECIMALS ±.016, ANGLES ±1°.
FOR DESIGN FEATURE PURPOSES, THIS STANDARD TAKES PRECEDENCE OVER PROCUREMENT DOCUMENTS REFERENCED HEREIN.
REFERENCED DOCUMENTS SHALL BE OF THE ISSUE IN EFFECT ON DATE OF INVITATION FOR BID.

APPROVED 18 DEC 64 REVISED (A) 21 DEC 66 (B) 17 SEP 82

User activities:
Review activities: DLA-CS

P.A. AIR FORCE - 82 (B)
Other Cust AIR FORCE - 99 NAVY - AS

TITLE LIGHTS, MARKER, AIRPORT, SEMIFLUSH, BASE MOUNTED, BIDIRECTIONAL AND UNIDIRECTIONAL

MILITARY STANDARD
MS26578

PROCUREMENT SPECIFICATION MIL-L-26202

SUPERSEDES:

SHEET 1 OF 3

DD FORM 1 SEP 67 672-1 Limited Coordination

PREVIOUS EDITIONS OF THIS FORM ARE OBSOLETE.

PROJECT NUMBER 6210-0542

FED. SUP CLASS
6210

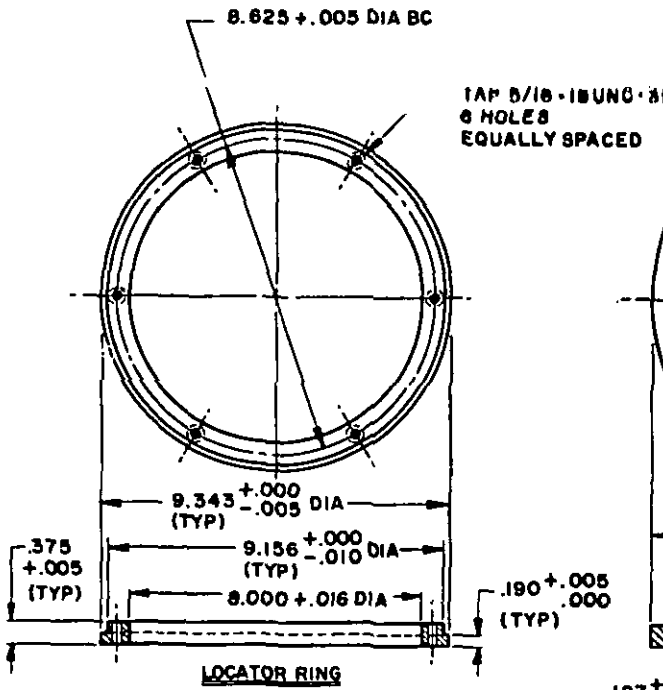

LOCATOR RING

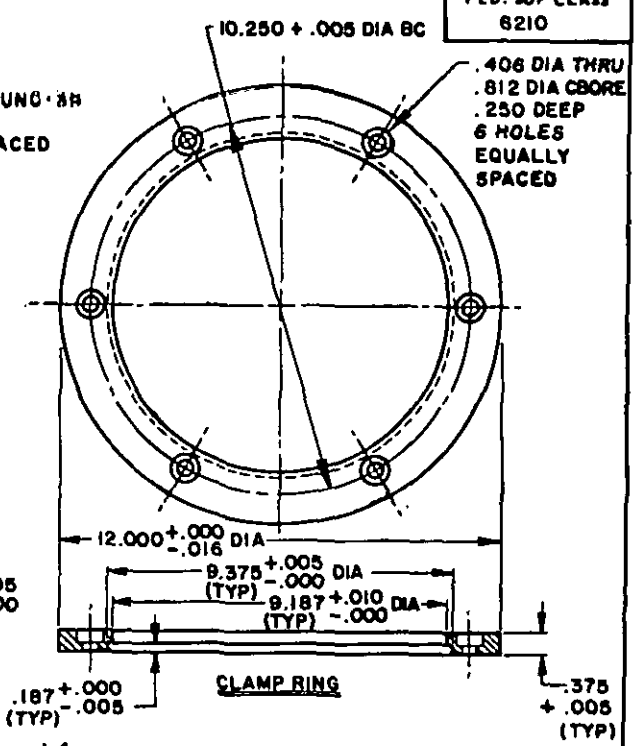

CLAMP RING

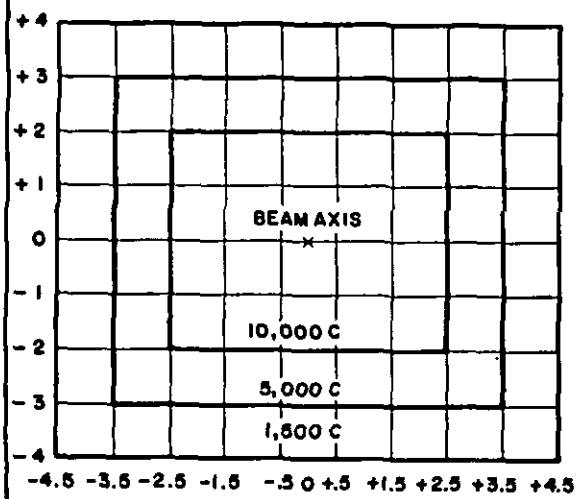

CLASS B LIGHTS

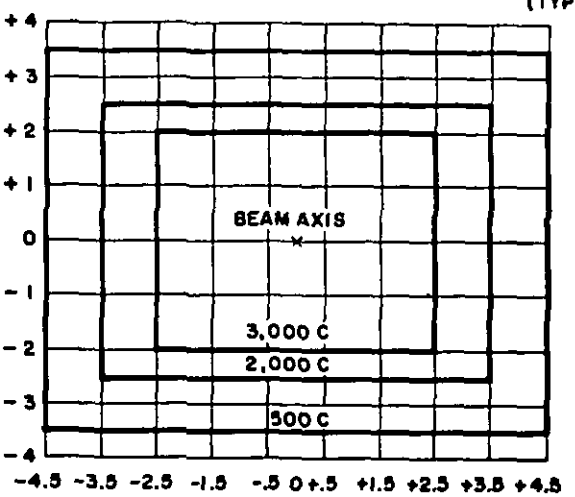

CLASS BB LIGHTS

THE ISOCANDELA DISTRIBUTIONS FOR THE LIGHTS ARE DESIGN GOAL MINIMUMS. A LIGHT SHALL BE CONSIDERED SATISFACTORY IF THE BEAM IS ESSENTIALLY ELLIPTICAL IN SHAPE, AND BEAM DIMENSIONS IN THE HORIZONTAL AND VERTICAL PLANES THROUGH THE BEAM AXIS ARE EQUAL OR EXCEED THE SPECIFIED DESIGN GOAL MINIMUMS. A MAXIMUM TOLERANCE OF ±1/2 DEGREE SHALL BE ALLOWED FROM THE SPECIFIED LOCATION OF THE BEAM AXIS AFTER NECESSARY CORRECTIONS HAVE BEEN APPLIED FOR ERRORS IN THE LAMP UTILIZED FOR TEST OF THE LIGHT. ABOVE TESTS MADE WITH 200 W, 6.6 AMP LAMP MS24488-6.

INTENSITY DISTRIBUTION

APPROVED 18 DEC 64 REVISED (B) FOR CHANGES SEE SHEETS 1, 2 & 3.

User activities:

Review activities:
DLA-CS

P.A. AIR FORCE-82 (B) Other Cust NAVY-AS AIR FORCE-99	TITLE LIGHTS, MARKER, AIRPORT, SEMIFLUSH, BASE MOUNTED, BIDIRECTIONAL AND UNIDIRECTIONAL	MILITARY STANDARD MS26578
PROCUREMENT SPECIFICATION MIL-L-26202	SUPERSEDES:	SHEET 2 OF 3

DD FORM 1 SEP 67 672-1 Limited Coordination

PREVIOUS EDITIONS OF THIS FORM ARE OBSOLETE.

LOCATION OF BEAM AXIS				
	BEAM		BEAM 2	
LIGHT TYPE	(a) AZIMUTH	(b) ELEVATION	(a) AZIMUTH	(b) ELEVATION
BB45	90.0	1.5	270	1.5
BB55	90	1.5	—	—
B15	86.5	4.5	273.5	4.5
B25	90.0	4.5	—	—
BB25	90.0	3.0	—	—

(a) AZIMUTH IS MEASURED AS SHOWN ON SHEET 1.
(b) ELEVATION IS MEASURED WITH RESPECT TO THE PLANE OF THE TOP OF THE BASE.

THE BEAM AXIS IS DETERMINED FROM THE HORIZONTAL AND VERTICAL INTENSITY DISTRIBUTIONS. ITS ANGLE IS THAT MIDWAY BETWEEN THE TWO ANGLES OF 50% MAXIMUM INTENSITY.

PROJECTION VALUES			
CLASS OF LIGHT	MAX HEIGHT ABOVE PAVEMENT (INCHES)	MAX SLOPE OF PROJECTING PART OF LIGHT IN VERTICAL PLANES PARALLEL TO RUNWAY (DEGREES)	MAX SLOPE OF PROJECTING PART OF LIGHT IN ALL OTHER VERTICAL PLANES (DEGREES)
B	1	15	20
BB	½	7-½	10

APPROVED 18 DEC 64 REVISED (B) FOR CHANGES SEE SHEETS 1, 2 & 3.

User activities:

Review activities: DLA-CS

P.A. AIRFORCE-82 (B)
Other Cust
NAVY-AS
AIR FORCE-99

PROCUREMENT SPECIFICATION
MIL-L-26202

TITLE LIGHTS, MARKER, AIRPORT, SEMIFLUSH, BASE MOUNTED, BIDIRECTIONAL AND UNIDIRECTIONAL

SUPERSEDES:

MILITARY STANDARD
MS26578
SHEET 3 OF 3

DD FORM 672-1 Limited Coordination

PREVIOUS EDITIONS OF THIS FORM ARE OBSOLETE.