FED. SUP CLASS
5945

INACTIVE FOR NEW DESIGN AFTER 5 JUN 87
NO SUPERSEDING STANDARD
(FOR NEW DESIGN USE MIL-R-6106/38)

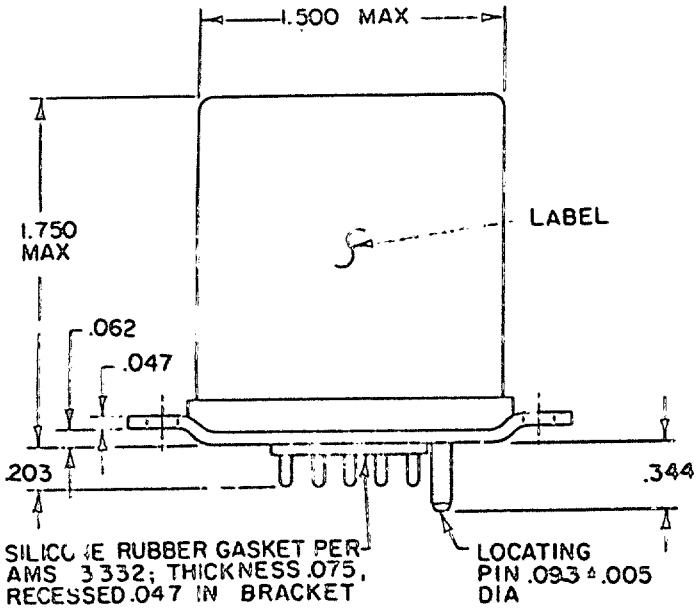

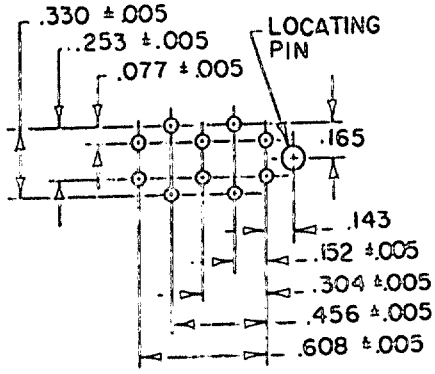

PIN LAYOUT

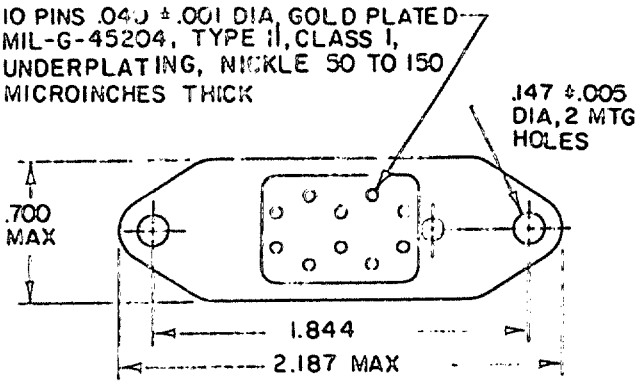

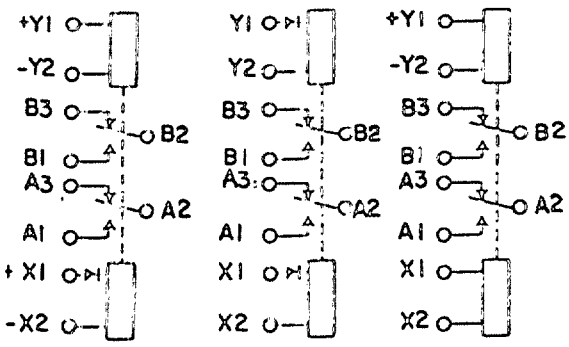

CIRCUIT DI (NOTE 7) | CIRCUIT AI (NOTE 5) | CIRCUIT ADI (NOTES 5, 7)

(G) denotes changes

APPROVED 1 Nov 60 REVISED (G) 20 Jan 1989

P A AF - 85 Other Cust Navy - AS	International interest	TITLE RELAYS, ELECTROMAGNETIC, 5 AMPERES, 2 POT, TYPE I, MAGNETIC LATCH, SOCKET MOUNTED, HERMETICALLY SEALED	MILITARY STANDARD MS25455
Procurement Specification MIL-R-6106		SUPERSEDES:	PAGE 1 OF 5

FORM 672 (Coordinated) PREVIOUS EDITIONS OF THIS FORM ARE OBSOLETE 5945-0791-01

DISTRIBUTION STATEMENT A. - Approved for public release; distribution is unlimited.

Inches	mm	Inches	mm
.001	0.03	.165	4.19
.005	0.13	.203	5.16
.010	0.25	.253	6.43
.040	1.02	.304	7.72
.047	1.19	.330	8.38
.062	1.57	.344	8.74
.075	1.91	.456	11.58
.077	1.96	.608	15.44
.093	2.36	.700	17.78
.143	3.63	1.500	38.10
.147	3.73	1.750	44.45
.152	3.86	1.844	46.84
		2.187	55.55

NOTES:
1. Dimensions are in inches.
2. Metric equivalents are given for general information only.
3. Unless otherwise specified, tolerances are ±.010 (0.25 mm).
4. Terminal numbers need not appear on relay headers provided there is affixed to the relay a suitable legible circuit diagram that permanently and positively identifies each terminal location specified herein.
5. The use of diodes on ac relays is optional. Actual application must be shown on label.
6. Pins to be perpendicular to header surface within 1 degree.
7. Relay is magnetically latched in both positions. Caution note to observe polarity must appear on relays with dc coils.
8. Shock, vibration, and acceleration requirements applicable with coils de-energized.
9. In the event of a conflict between the text of this standard and the references cited herein, the text of this standard shall take precedence.
10. Referenced Government documents of the issue listed in that issue of the Department of Defense Index of Specifications and Standards (DODISS) specified in the solicitation form a part of this standard to the extent specified herein.

TABLE I. Dash numbers and characteristics.

Dash number MS25455-	Type	Coil	Terminal type	Max weight in pounds
D1	I	dc	Plug in	0.21
A1	I	ac	Plug in	0.23
AD1	I	ac-dc	Plug in	0.23

For changes see page 5

APPROVED 1 Nov 1960 REVISED (G)

TABLE II. Operating characteristics.

MS part no. MS25455-	Coil data											Time - (milliseconds maximum)				
	Coil	Nominal			Max		Max pick-up voltage			Operate 3/	Release 4/	Contact bounce				
												Main		Aux		
		Volts 1/	Freq. Hz	Res Ω	Volts	Amperes	Normal 2/	High temp test	Cont current test			NO	NC	NO	NC	
D1	X1, X2 Y1, Y2	28	dc	N/A	29	0.12	18	18	19.8	25	N/A	2	2			
A1	X1, X2 Y1, Y2	115	400 5/	N/A	122	0.06	90	90	95	25	N/A	2	2			
AD1	X1, X2	115	400 5/	N/A	122	0.06	90	90	95	25	N/A	2	2			
	Y1, Y2	28	dc	N/A	29	0.12	18	18	19.8	25	N/A	2	2			

1/ CAUTION: Use of any coil voltage less than nominal coil voltage will compromise the operation of the relay.
2/ Over the temperature range.
3/ With nominal coil voltage.
4/ From nominal coil voltage.
5/ MS25455-A1 and -AD1 ac coils may be used on 60 Hz if maximum ambient temperature is limited to +85°C (coil current: 0.066 ampere maximum).

TABLE III. Rated contact load (amperes per pole) (case grounded).

Type of load	Life operating cycles X 10^3	28 V dc				115 V ac, 1 phase				115/200 V ac, 3 phase 1/				See appropriate notes
		Main		Aux		Main		Aux		Main		Aux		
		NO	NC	NO	NC	400 Hz	60 Hz	400 Hz	60 Hz	400 Hz	60 Hz	400 Hz	60 Hz	
Resistive	100	5	5			5	4							
Inductive	100													
Inductive	20	3	3			3	2							
Motor	100	1.5	1.5			1.5	1							
Lamp	100	0.8	0.8			0.8	0.6							
Transfer load														2/
Mechanical life reduced current	400	1.25	1.25			1.25	1							
Intmd current	Applicable per specification													

1/ Absence of value indicates relay is not rated for 3-phase applications.
2/ Transfer load indicates relay suitable for transfer between unsynchronized ac power supplies at rating indicated.

Review activities: Army - Navy - EC Air Force - 11

User activities: Army - Navy - Air Force -

Environmental characteristics

Temperature range	-70°C to +125°C
Max altitude rating	80,000 ft
Shock G-level	50 G
Duration	11 ms
Max duration contact opening	10 µs
Vibration - sinusoidal	
G-level	10 G
Frequency range	5 - 1500 Hz
Acceleration	15 G

Electrical characteristics

Insulation resistance, initial	100 megohms
After life or environmental tests	50 megohms

Dielectric strength (sea level)

	Initial	After life tests
Coil to case	1,000 V rms	1,000 V rms
Aux contacts		
All other points	1,000 V rms	1,000 V rms

Dielectric strength (altitude)	(When mounted in mating socket) 80,000 ft
Coil to case	500 V rms
Aux contacts	
All other points	500 V rms

Max contact drop initial	0.150 volt
After life test	0.175 volt
Overload current	20 amperes
Rupture current	25 amperes
Duty rating	Continuous
RFI specification	MIL-STD-461

(Applicable to coil circuits of ac operated relays)

Quality conformance inspection

Performance of groups B and C inspections are not applicable.

(G) Group A acceptance reports shall be submitted to the preparing activity on a yearly basis in order to retain qualification for this military standard sheet.

P.A AF - 85
Other Cust Navy - AS
International Interest
Procurement Specification MIL-R-6106
SUPERSEDES:
TITLE RELAYS, ELECTROMAGNETIC, 5 AMPERES, 2 PDT, TYPE I, MAGNETIC LATCH, SOCKET MOUNTED, HERMETICALLY SEALED
MILITARY STANDARD
MS25455
FED. SUP CLASS 5945
APPROVED 1 Nov 1960 REVISED (G) For changes see page 5