FED. SUP CLASS
5940

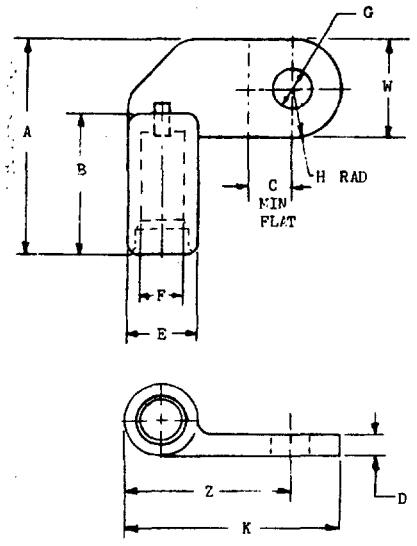

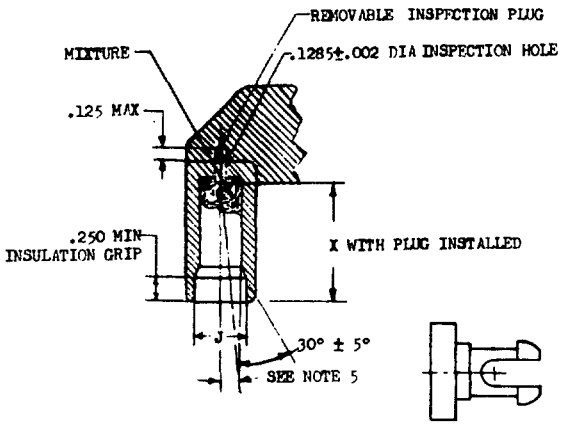

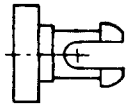

INSPECTION PLUG (TYP)

DASH NO.	CABLE SIZE	STUD SIZE	A ±.032	B ±.025	C ±.020	D ±.015	E ±.020	F ±.003	G DIA MAX	G DIA MIN	H ±.008	K ±.035	J DIA ±.010	W ±.016	Z ±.024	X ±.020
-1	8	NO. 10	1.617	1.067	.372	.096	.355	.167	.203	.193	.344	1.095	.250	.688	.751	.880
-2		1/4							.235	.260						
-3		5/16	1.808		.466				.343	.320	.437	1.342		.875	.905	
-4		3/8							.410	.385						
-5	6	NO. 10	1.742	1.192	.372	.112	.413	.219	.203	.193	.344	1.230	.313	.688	.886	1.005
-6		1/4							.235	.260						
-7		5/16	1.935		.466				.343	.320	.437	1.400		.875	.963	
-8		3/8							.410	.385						
-9	4	NO. 10	1.867	1.317	.372	.128	.510	.273	.203	.193	.344	1.250	.375	.688	.906	1.130
-10		1/4							.235	.260						
-11		5/16	2.055						.343	.320	.437	1.500		.875	1.063	
-12		3/8			.466				.410	.385						
-13	2	1/4	2.196	1.458		.143	.601	.342	.235	.260		1.600	.469		1.163	1.271
-14		5/16							.343	.320						
-15		3/8							.410	.385						
-16		1/2	2.508		.622				.535	.510	.593	1.900		1.187	1.307	
-17	1	1/4	2.196		.466		.633	.376	.235	.260	.437	1.615	.516	.875	1.178	
-18		5/16							.343	.320						
-19		3/8							.410	.385						
-20		1/2	2.508		.622				.535	.510	.593	1.935		1.187	1.342	
-21	0	1/4	2.240	1.520	.466	.159	.699	.425	.235	.260	.437	1.710	.563	.875	1.273	1.333
-22		5/16							.343	.320						
-23		3/8							.410	.385						
-24		1/2	2.570		.622				.535	.510	.593	2.015		1.187	1.422	
-25	00	5/16	2.323	1.582	.466	.190	.789	.485	.343	.320	.437	1.795	.625	.875	1.358	1.395
-26		3/8							.410	.385						
-27		1/2	2.632		.622				.535	.510	.593	2.105		1.187	1.512	
-28	000	3/8	2.505	1.645	.551		.836	.547	.410	.385	.500	1.994	.703	1.000	1.494	1.458
-29		1/2	2.695		.622				.535	.510	.593	2.145		1.187	1.552	
-30	0000	3/8	2.663	1.801	.551	.206	.947	.594	.410	.385	.500	2.103	.766	1.000	1.603	1.614
-31		1/2	2.851		.622				.535	.510	.593	2.265		1.187	1.672	

NOTES:
1. MATERIAL: WROUGHT ALUMINUM, MINIMUM CONDUCTIVITY 57% IACS.
2. TONGUE HARDNESS
   MAXIMUM ROCKWELL H-95
   MINIMUM ROCKWELL H-65
   BARREL HARDNESS
   MAXIMUM ROCKWELL H-35
3. TONGUE SURFACES PARALLEL WITHIN .005 INCHES. TONGUE SURFACE FINISH TO BE 63 MICROINCHES MAXIMUM BEFORE PLATING.
4. TERMINAL SHALL BE OF ONE PIECE CONSTRUCTION.
5. A MAXIMUM OF 5° PERMITTED IN UNCRIMPED TERMINALS. AFTER CRIMPING, THE CENTER LINE OF THE BARREL SHALL BE PARALLEL WITHIN ±1° WITH THE FLAT OF THE TONGUE.
6. (A) FINISH: TIN PLATE - ELECTRODEPOSITED .0003 INCH MINIMUM.
7. (A) DIMENSIONS IN INCHES.

FOR DESIGN FEATURE PURPOSES, THIS STANDARD TAKES PRECEDENCE OVER PROCUREMENT DOCUMENTS REFERENCED HEREIN. REFERENCED DOCUMENTS SHALL BE OF THE ISSUE IN EFFECT ON DATE OF INVITATIONS FOR BID.

User: None
Reviewer: USAF - 11, 85
Navy - Mcps
Army - EL

APPROVED 25 Jan 60 REVISED (A) 15 May 64

This military standard is approved by the Department of Defense and is mandatory on all activities. Selection for all new engineering and design applications and for repetitive use shall be made from this document.

P.A. Navy-WEFS (A) Other Cust USAF-11 ARMY-EL	TITLE TERMINAL-LUG, CRIMP STYLE, RIGHT ANGLE TYPE, FOR ALUMINUM AIRCRAFT WIRE, CLASS 1	MILITARY STANDARD MS25438
PROCUREMENT SPECIFICATION MIL-T-7099	SUPERSEDES:	SHEET 1 OF 1

DD FORM 1 SEP 67 672-1 (Limited coordination) PREVIOUS EDITIONS OF THIS FORM ARE OBSOLETE.