INCH-POUND

MS25272J
27 November 2003
SUPERSEDING
MS25272H
20 January 1989

DETAIL SPECIFICATION SHEET

RELAYS, ELECTROMAGNETIC, 10 AMPERES, 4 PDT, TYPE I, POTTED LEAD, HERMETICALLY SEALED

INACTIVE FOR NEW DESIGN AFTER 5 JUNE 1987.
NO SUPERSEDING SPECIFICATION.

This specification is approved for use by all Departments and Agencies of the Department of Defense.

The requirements for acquiring the relay described herein shall consist of this specification and the latest issue of MIL-PRF-6106

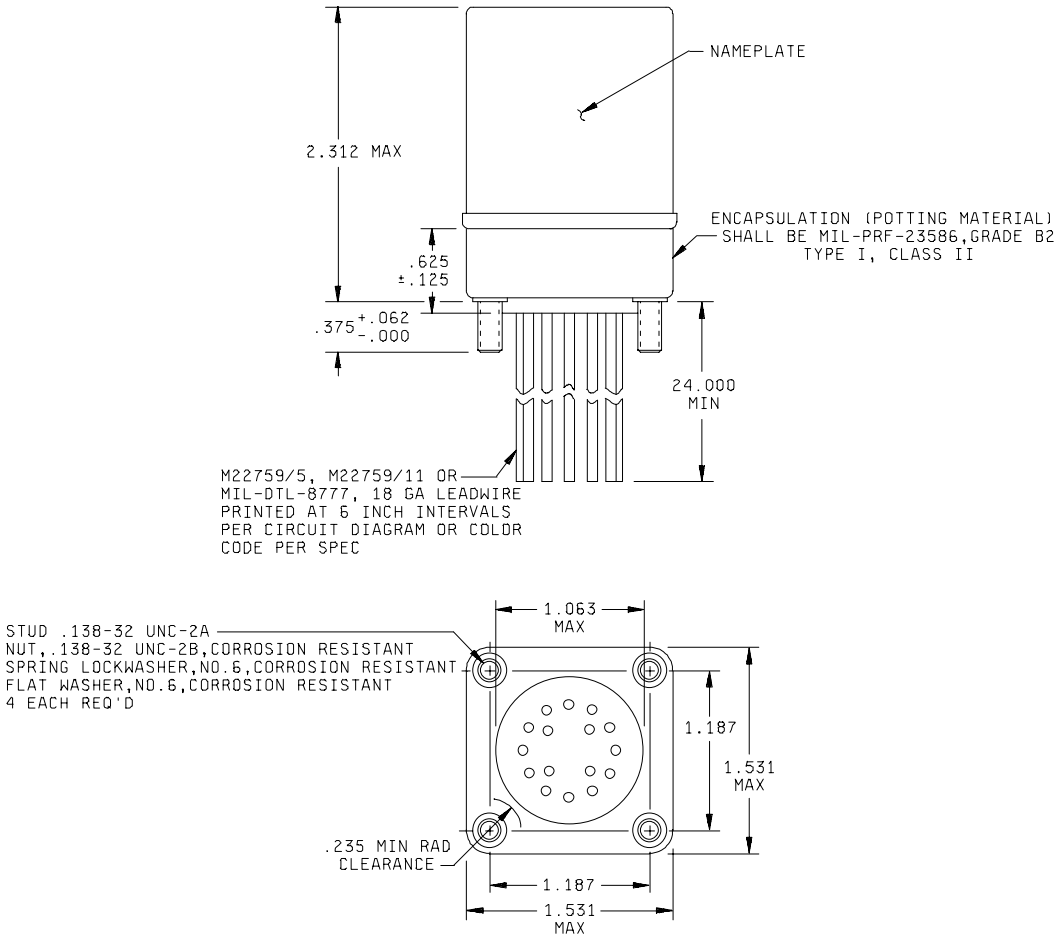

FIGURE 1. Dimensions and configurations.

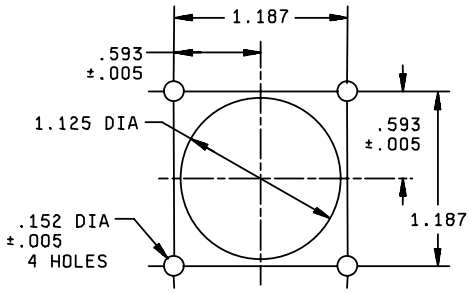

MOUNTING HOLE LAYOUT

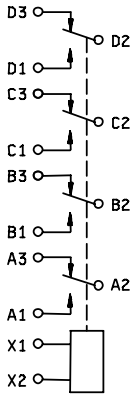

CIRCUIT DIAGRAM
SEE NOTE 5

NOTES:

1/ Dimensions are in inches.
2/ Metric equivalents are given for general information only.
3/ Unless otherwise specified, tolerance is ±.010 (0.25 mm).
4/ Terminal numbers need not appear on relay header provided there is affixed to the relay a suitable legible circuit diagram that permanently and positively identifies each terminal location specified herein.
5/ The use of diodes on ac relays is optional. Actual application must be shown on label.
6/ In the event of conflict between the text of this specification and the references cited herein, the text of this specification shall take precedence.
7/ Referenced Government documents of the issue listed in that issue of the Department of Defense Index of Specifications and Standards (DoDISS) specified in the solicitation forms a part of this specification to the extent specified herein.

Inches	mm
.005	0.13
.062	1.57
.125	3.18
.152	3.86
.235	5.97
.375	9.53
.593	15.06
.625	15.88
1.100	27.94
1.187	30.15
1.531	38.89
2.187	55.55
24.00	609.60

FIGURE 1. Dimensions and configurations – Continued.

TABLE I. Dash numbers and characteristics.

Dash number MS25272-	Type	Coil	Terminal type	Mounting	Max weight in pounds
D1	I	dc	Lead	Stud	.77
A1	I	ac	Lead	Stud	.77

TABLE II. Operating characteristics.

PIN MS25272-	Coil data												Time - milliseconds max					
	Coil	Rated			Max		1/ Max pick-up voltage			Hold voltage 2/	Drop out voltage 2/	Operate 3/	Release 4/	Contact Bounce				
														Main		Aux		
		Volts 1/	Freq Hz	Ω Res ±10%	Volts	Amp	Normal 2/	High temp test	Cont current test					NO	NC	NO	NC	
D1	X1, X2	28	dc	N/A	29	0.30	18	19.5	22.5	7.0	1.5	20	20	2	2	N/A	N/A	
A1	X1, X2	115	400 5/	N/A	122	0.073	90	95	103	30	5.0	25	50	2	2	N/A	N/A	

1/ CAUTION: Use of any coil voltage less than rated coil voltage will compromise the operation of the relay.
2/ Over the temperature range.
3/ With nominal coil voltage.
4/ From nominal coil voltage.
5/ MS25272-A1 may be used on 60 Hz if maximum ambient temperature is +85°C (maximum coil current shall be 0.0777 ampere).

TABLE III. Rated contact load (amperes per pole) (case grounded).

Type of load	Life operating cycles x 10^3	28 V dc				115 V ac, 1 phase				115/200 V ac, 3 phase 1/				See appropriate notes
		Main		Aux		Main		Aux		Main		Aux		
		NO	NC	NO	NC	400 Hz	60 Hz	400 Hz	60 Hz	400 Hz	60 Hz	400 Hz	60 Hz	
Resistive	100	10	10			10	6			10	6			
Inductive	100													
Inductive	20	6	6			6	4			6	4			
Motor	100	4	4			4	3			4	3			
Lamp	100	2	2			2	1.5			2	1.5			
Transfer load														2/
Mechanical life reduced current	400	2.5	2.5			2.5	2			2.5	2			
Mixed loads	Applicable per specification													

1/ Absence of value indicates relay is not rated for 3-phase applications.
2/ Transfer load indicates relay is suitable for transfer between unsynchronized ac power supplies at rating indicated.

Environmental characteristics.

Temperature range	-70°C to +125°C
Max altitude rating	80,000 ft
Shock G-level	50 g's
Duration	11 ms
Max duration contact opening	10 μs
Vibration - sinusoidal	
G-level	10 g's
Frequency range	5 - 1,500 Hz

Vibration - random	
Applicable specification	N/A
Power spectral density	N/A
RMS G min	N/A
Frequency range	N/A
Curve	N/A
High shock	N/A
Acceleration	15 g's

Electrical characteristics.

Insulation resistance, initial	100 megohms.
After life or environmental tests	50 megohms.

Dielectric strength (sea level).

	Initial	After life tests
Coil to case	1,050 V rms	1,000 V rms
Aux contacts		
All other points	1,500 V rms	1,125 V rms

Dielectric strength (altitude).

	80,000 ft
Coil to case	1,000 V rms
Aux contacts	
All other points	1,000 V rms

Max contact drop initial	0.150 volt.
After life test	0.175 volt.
Overload current	40 amperes dc, 60 amperes ac.
Rupture current	50 amperes, 80 amperes.
Duty rating	Continuous.
RFI specification	MIL-STD-461

(Applicable to coil circuits of ac operated relays).

Conformance inspection.

Group A acceptance reports shall be submitted to the preparing activity on a yearly basis in order to retain qualification for this military specification sheet.

Performance of groups B and C tests are not applicable.

Qualification by similarity: See MIL-PRF-6106.

NOTES

Referenced documents. In addition to MIL-PRF-6106, this specification sheet references the following documents. (Government documents are available on line at http://assist.daps.dla.mil/quicksearch or www.dodssp.daps.mil or from the Standardization Document Order Desk, 700 Robbins Avenue, Building 4D, Philadelphia, PA 19111-5094).

SPECIFICATIONS

Department of Defense

MIL-DTL-8777 - Wire, Electrical, Silicone-Insulated, Copper, 600-Volt, 200 Deg. C
MIL-PRF-23586 - Sealing Compound (with Accelerator), Silicone Rubber, Electrical
MIL-W-22759/5 - Wire, Electrical, Fluoropolymer-Insulated, Abrasion Resistant Extruded PTFE, Silver-Coated Copper Conductor, 600 Volt
MIL-W-22759/11- Wire, Electric, Fluoropolymer-Insulated, Extruded TFE, Silver-Coated Copper Conductor, 600-Volt

STANDARDS

Department of Defense

MIL-STD-461 - Requirements for the Control of Electromagnetic Interference Characteristics of Subsystems and Equipment

Custodians:
Navy - AS
Air Force - 11
DLA - CC

Review activities:
Navy - EC

Preparing activity:
DLA - CC

(Project 5945-1214-09)

NOTE: The activities listed above were interested in this document as of the date of this document. Since organizations and responsibilities can change, you should verify the currency of the information above using ASSIST Online database at www.dodssp.daps.mil.