INCH-POUND

MS25269L
27 November 2003
SUPERSEDING
MS25269KJ
12 June 1995

DETAIL SPECIFICATION SHEET

RELAYS, ELECTROMAGNETIC, 5 AMPERES, 6 PDT, TYPE I, HERMETICALLY SEALED

INACTIVE FOR NEW DESIGN AFTER 15 OCTOBER 1999. NO SUPERSEDING SPECIFICATION.

This specification is approved for use by all Departments and Agencies of the Department of Defense.

The requirements for acquiring the relay described herein shall consist of this specification and the latest issue of MIL-PRF-6106.

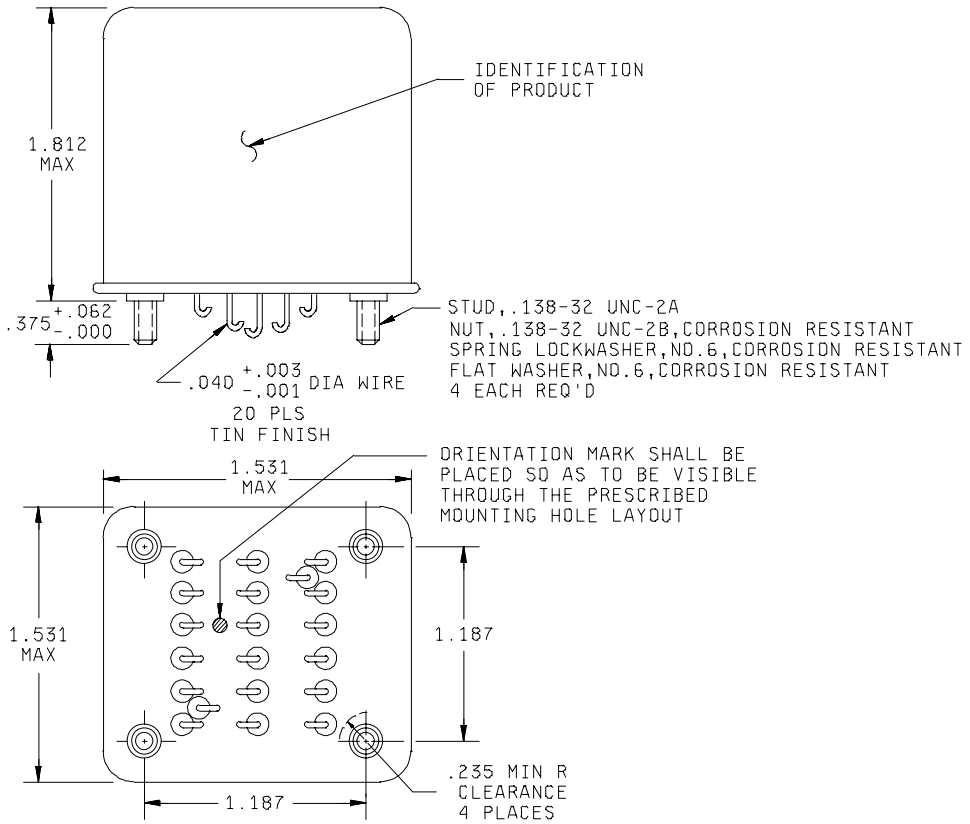

FIGURE 1. Dimensions and configuration.

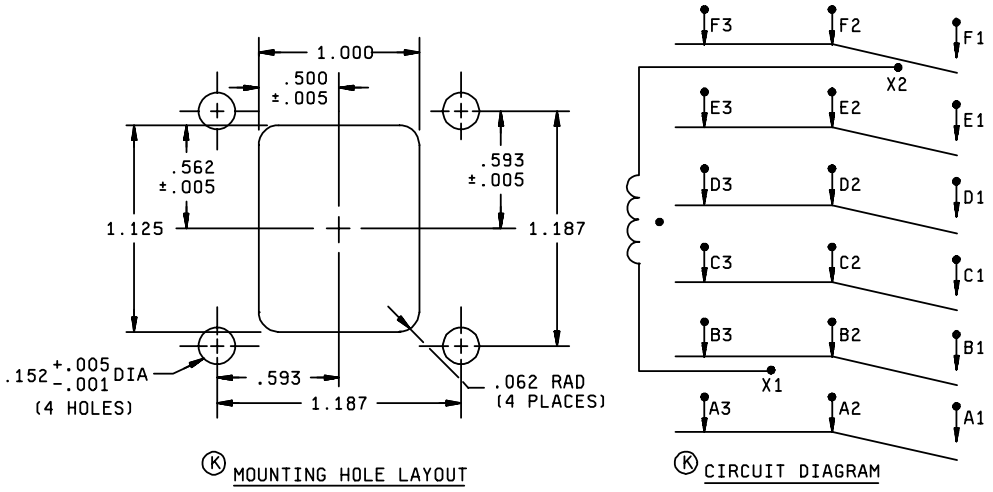

Inches	mm	Inches	mm
.001	0.03	.450	11.43
.003	0.08	.562	14.27
.005	0.13	.593	15.06
.040	1.02	.900	22.86
.062	1.57	1.125	28.58
.138	3.51	1.187	30.15
.152	3.86	1.531	38.89
.235	5.97	1.812	46.02
.375	9.53		

NOTES:

1. Dimensions are in inches.
2. Metric equivalents are given for general information only.
3. Unless otherwise specified, tolerance is ±.010 (0.25 mm).
4. In the event of a conflict between the text of this standard and the references cited herein, the text of this standard shall take precedence.
5. Referenced Government documents of the issue listed in that issue of the Department of Defense Index of Specifications and Standards (DODISS) specified in the solicitation form a part of this standard to the extent specified herein.
6. Terminal numbers shall not appear on the relay header. There shall be affixed to the relay a legible circuit diagram that identifies each terminal location specified.

FIGURE 1. Dimensions and configuration - Continued.

REQUIREMENTS:

Dimensions and configuration: See figure 1.

Part or Identifying Numbers (PIN's) and general characteristics: See table I.

Contact data:

Load ratings: See table II.

Maximum contact drop, initial: 0.150 V.

After life test: 0.175 V.

Overload current: 20 amperes.

Rupture current: 25 amperes.

Coil data: See table III.

Duty rating: Continuous.

RFI specification: MIL-STD-461 (applicable to coil of ac operated relays).

Electrical data:

Minimum insulation resistance:

Initial: 100 megohms.

After life or environmental test: 50 megohms.

Dielectric strength (sea level)

	Initial	After life tests
Coil to case	1,000 V rms	1,000 V rms
Aux contacts	N/A	N/A
All other points	1,000 V rms	1,000 V rms

Dielectric strength (altitude)

	80,000 ft
Coil to case	250 V rms
Aux contacts	N/A
All other points	250 V rms

Environmental characteristics:

Temperature range: -70ºC to +120ºC.

Maximum altitude rating: 80,000 feet.

Shock, g-level: 50 g's.

Duration: 6-9 ms.

Maximum duration contact opening: 10 μs.

Vibration - sinusoidal:

G-level: 10 g's.

Frequency range: 5 - 1,500 Hz.

Vibration - random:

Applicable specification: Not applicable.

Power spectral density: Not applicable.

RMS G-minimum: Not applicable.

Frequency range: Not applicable.

Curve: Not applicable.

High shock: Not applicable.

Acceleration: 15 g's.

Qualification by similarity: See MIL-PRF-6106.

Group B and C inspections may be suspended at the discretion of the qualifying activity.

PIN: MS25269- (plus applicable dash number from table I).

TABLE I. PIN's and general characteristics.

PIN MS25269-	Type	Coil	Terminal type	Mounting type	Maximum weight (pounds)
D1	I	dc	Solder hook	Stud	0.35
A1	I	ac	Solder hook	Stud	0.35

TABLE II. Rated contact load (amperes per pole) case grounded.

Type of load	Life operating cycles x 10^3	28 V dc				115 V ac, 1 phase				115/200 V ac, 3 phase 1/			
		Main		Aux		Main		Aux		Main		Aux	
		NO	NC	NO	NC	400 Hz	60 Hz	400 Hz	60 Hz	400 Hz	60 Hz	400 Hz	60 Hz
Resistive	100 3/	5	5			5	4						
Inductive	100 3/												
Inductive	20 3/	3	3			3	2						
Motor	100 3/	1.5	1.5			1.5	1						
Lamp	100 3/	0.8	0.8			0.8	0.6						
Transfer load 2/													
Mechanical life (reduced current)	400 3/	1.25	1.25			1.25	1						
Mixed loads		Applicable in accordance with MIL-PRF-6106											

1/ Absence of value indicates the relay is not rated for 3 phase application.
2/ Transfer load indicates the relay is suitable for transfer between unsynchronized ac power supplies at the rating indicated.
3/ MS25269-A1 is rated for 50,000 cycles, except that inductive is 10,000 cycles and mechanical life is 200,000 cycles.

TABLE III. Operating characteristics.

PIN MS25269-	Coil data											Time - (milliseconds maximum)					
	Coil	Rated			Max		Max pick-up voltage			Hold voltage 2/	Drop-out voltage 2/	Operate 3/	Release 4/	Bounce			
		Volts 1/	Freq. (Hz)	Res (Ω)	Volts	Amperes	Normal 2/	High temp test	Cont current test					Main		Aux	
														NO	NC	NO	NC
D1	X1,X2	28	dc		29	0.18	18	19.8	22.5	7.0	1.5	20	20	2	2		
A1	X1,X2	115	400 5/		122	0.04	90	95	103	30	5.0	25	50	2	2		

1/ CAUTION: Use of any coil voltage less than rated coil voltage will compromise the operation of the relay.
2/ Over the temperature range.
3/ With rated coil voltage.
4/ From rated coil voltage.
5/ MS25269-A1 may be used on 60 Hz if ambient temperature is limited to 850C maximum and current is limited to 0.044 ampere maximum.

NOTES

Referenced documents. In addition to MIL-PRF-6106, this specification sheet references the following documents. (Government documents are available on line at http://assist.daps.dla.mil/quicksearch or www.dodssp.daps.mil or from the Standardization Document Order Desk, 700 Robbins Avenue, Building 4D, Philadelphia, PA 19111-5094).

STANDARDS

Department of Defense

MIL-STD-461 - Requirements for the Control of Electromagnetic Interference Characteristics of Subsystems and Equipment

Custodians:
Navy - AS
Air Force - 11
DLA - CC

Preparing activity:
DLA - CC

(Project 5945-1214-06)

Review activities:
Navy - EC

NOTE: The activities listed above were interested in this document as of the date of this document. Since organizations and responsibilities can change, you should verify the currency of the information above using ASSIST Online database at www.dodssp.daps.mil.