Downloaded from http://www.everyspec.com

INCH-POUND
MS25081L
15 August 2011
SUPERSEDING
MS25081K
2 February 2004

DETAIL SPECIFICATION SHEET

WASHER, KEY

Reactivated after 2 February 2004 and may be used for new and existing designs and acquisitions.

This specification sheet is approved for use by all Departments and Agencies of the Department of Defense.

The requirements for acquiring the product described herein shall consist of this specification sheet.

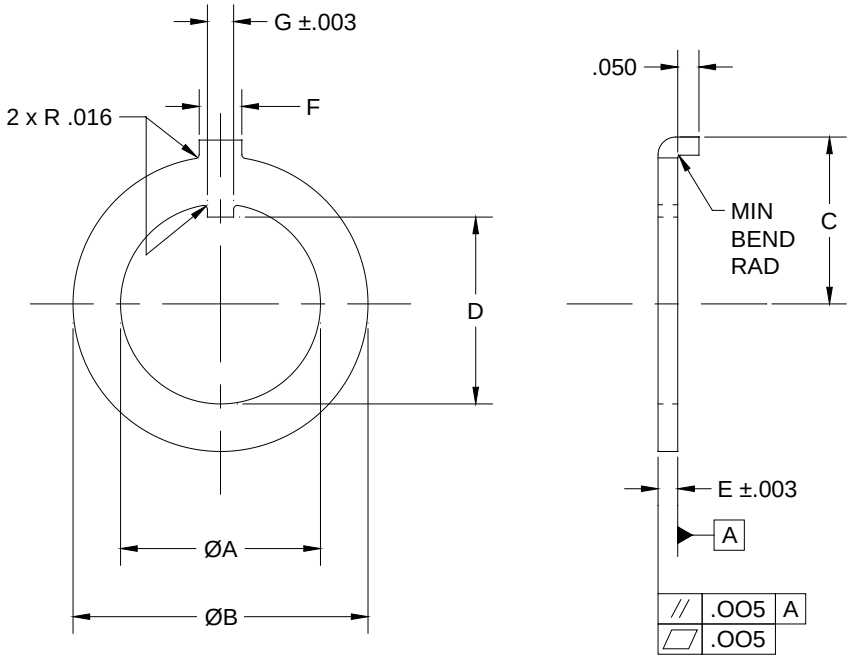

FIGURE 1. Washer, Key.

Downloaded from http://www.everyspec.com

TABLE I. Dash numbers and dimensions.

DASH NO		∅A	∅B	C	D		E	F	G
STEEL	CRES		±.015		MAX	MIN			
-0	C0	.255	.398	.263	.223	.220	.030	.062	.046
-4	C4	.475	.719	.392	.440	.433	.040	.110	.062
-5	C5	.631	.875	.517	.597	.589			
-6	C6	.652		.470	.605	.591			
-7	C7	.752	.984	.528	.707	.693			
-8	C8	1.010	1.250	.705	.965	.951			

REQUIREMENTS:

1. Marking: The washer shall be marked in accordance with MIL-STD-130.

2. Material: Carbon steel in accordance with QQ-S-698.
   Corrosion resistant steel (CRES), 304 (UNS S30400) in accordance with SAE-AIR4127.

3. Finish: Carbon steel, cadmium plate in accordance with SAE-AMS-QQ-P-416, type II, class 3.
   CRES, passivate in accordance with SAE-AMS2700.

4. Tolerances: Unless otherwise specified, tolerances: .XXX ± .005.

5. Example of part number: MS25081-4 = Washer, cadmium plated carbon steel.
   MS25081C4 = Washer, corrosion resistant steel

NOTES:

1. Dimensions in inches.

2. Break sharp edges and remove all burrs.

3. Interpret drawing in accordance with ASME Y14.5M.

4. In the event of a conflict between the text of this document and the references cited herein the text of this document takes precedence.

5. Unless otherwise specified, issues of referenced documents are those in effect at the time of solicitation.

6. Changes from previous issue. Marginal notations are not used in this revision to identify changes with respect to the previous issue due to the extent of the changes.

Downloaded from http://www.everyspec.com

MILITARY INTEREST

Custodians:
Army – CR4
Navy - AS
Air Force – 99

Preparing activity:
DLA - IS

(Project 5310-2011-009)

NOTE: The activities listed above were interested in this document as of the date of this document. Since organizations and responsibilities can change, you should verify the currency of the information above using the ASSIST Online database at https://assist.daps.dla.mil