DISTRIBUTION STATEMENT A. Approved for public release; distribution is unlimited.

NOTICE: When Government drawings, specifications, or other data are used for any purpose other than in connection with a definitely related Government procurement operation, the United States Government thereby incurs no responsibility, nor any obligation whatsoever; and the fact that the Government may have formulated, furnished, or in any way supplied the said drawings, specifications, or other data is not to be regarded by implication or otherwise as in any manner licensing the holder or any other person or corporation, or conveying any rights or permission to manufacture, use, or sell any patented invention that may in any way be related thereto.

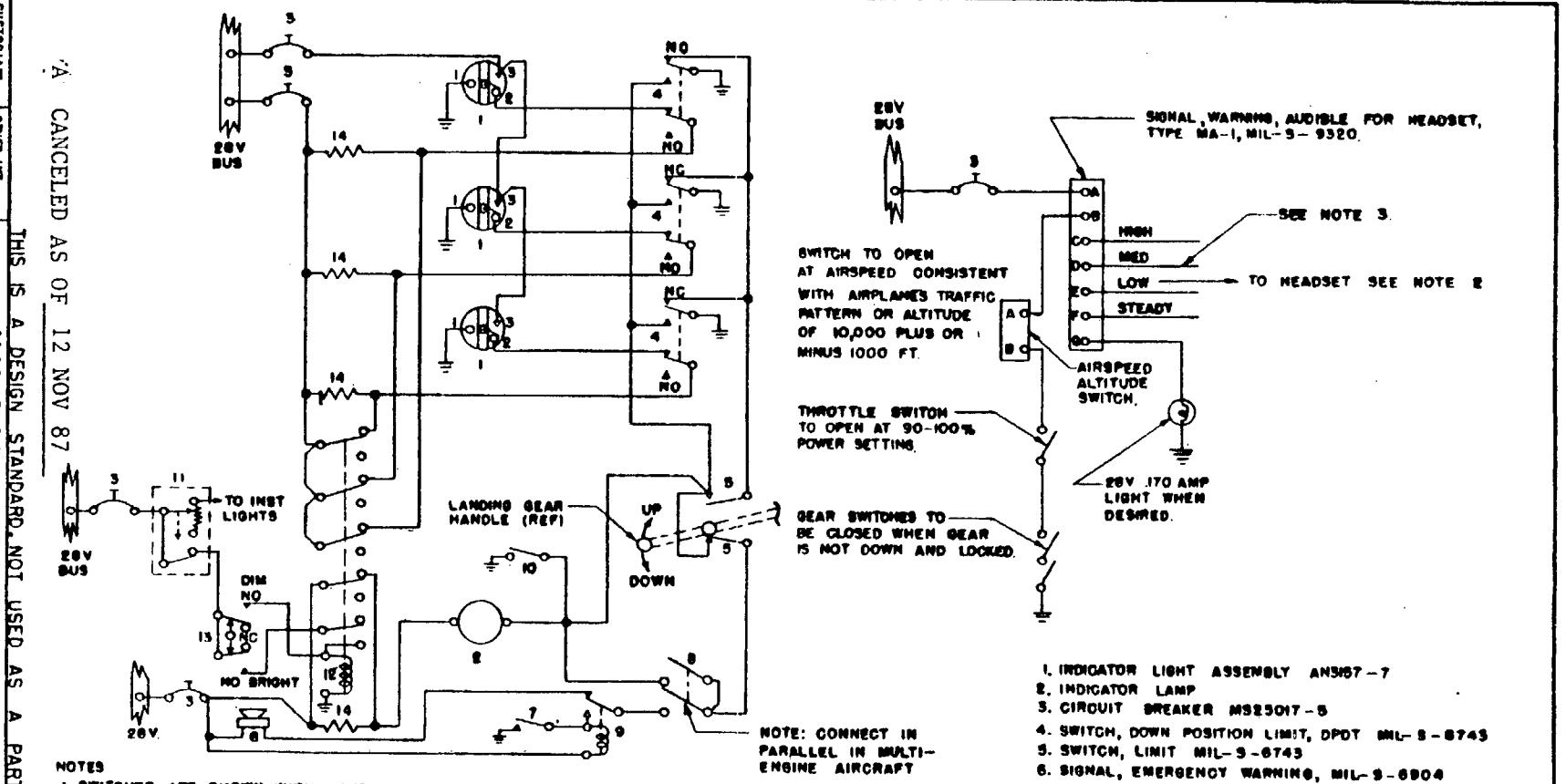

NOTES

1 SWITCHES ARE SHOWN WITH LANDING GEAR IN DOWN AND LOCKED POSITION.

2 IN AIRCRAFT UTILIZING HEADSETS HS-33 OR HS-38 CONNECT TO HIGH SIDE. IN AIRCRAFT EQUIPPED WITH AN/AIC-10 INTERPHONE SYSTEMS CONNECT AS FOLLOWS ACCORDING TO INSTALLED COMPONENTS:

A ON INTERPHONE CONTROL C-823/AIC-10 TO PIN C ON PLUG AN3106-20-27S

B ON CONTROL PANEL C-824/AIC-10 TO PIN J ON PLUG AN3106-22-14S

C ON AUDIO FREQUENCY AMPLIFIER AN-845/AIC-10 TO PIN U ON THE PLUG WHICH IS PART OF THE MOUNTING BASE.

3 MEDIUM OUTPUT PIN D OF SIGNAL WILL BE SATISFACTORY FOR MOST INSTALLATIONS.

4 THIS DIAGRAM IS INTENDED AS A GENERAL FUNCTIONAL GUIDE ONLY. THE GREEN LIGHTS SHALL INDICATE THE DOWN AND LOCKED POSITION OF EACH UNIT OF THE LANDING GEAR SYSTEM THE RED WARNING LIGHT SHALL INDICATE ANY POSITION OF THE GEAR NOT CONSISTENT WITH CONTROL, THROTTLE, OR ALTITUDE AIRSPEED SETTINGS. NO INDICATION OF UP AND LOCKED POSITION IS REQUIRED.

1. INDICATOR LIGHT ASSEMBLY AN5167-7
2. INDICATOR LAMP
3. CIRCUIT BREAKER MS25017-5
4. SWITCH, DOWN POSITION LIMIT, DPDT MIL-S-6743
5. SWITCH, LIMIT MIL-S-6743
6. SIGNAL, EMERGENCY WARNING, MIL-S-6904
7. SWITCH, HORN SILENCING, AN3022-8
8. SWITCH, THROTTLE LIMIT, MIL-S-6743
9. RELAY, HORN SILENCING, AN3314-1
10. SWITCH, LIGHT TESTING, AN3022-8
11. OFF POSITION RHEOSTAT WITH SNAP SWITCH (REF)
12. DIMMING RELAY
13. SWITCH AN3238-2
14. DIMMING RESISTOR

APPROVED 13 FEB 57 REVISED (A) 12Nov87

FED. SUP. CLASS. 1630

CANCELED AS OF 12 NOV 87

THIS IS A DESIGN STANDARD NOT USED AS A PART NUMBER.

CUSTODIANS: Air Force 11

OTHER INT.

PROCUREMENT SPECIFICATION: NONE

SUPERSEDES: USAF DRAWING 49B7565

MILITARY STANDARD

WIRING DIAGRAM LANDING GEAR INDICATOR AND WARNING SYSTEM, SCHEMATIC

MS24453 (USAF)

SHEET 1 OF 1

DD FORM 672-1 1 OCT 52

Project 1630-F337

Downloaded from http://www.everyspec.com