INCH-POUND

MS24179N
15 April 2003
SUPERSEDING
MS24179M
13 October 1994

DETAIL SPECIFICATION SHEET

RELAYS, ELECTROMAGNETIC, 400 AMPERES, 1 PST (N. O.), TYPE III, NON-HERMETICALLY SEALED

The requirements for acquiring the relay described herein shall consist of this specification and the latest issue of MIL-PRF-6106.

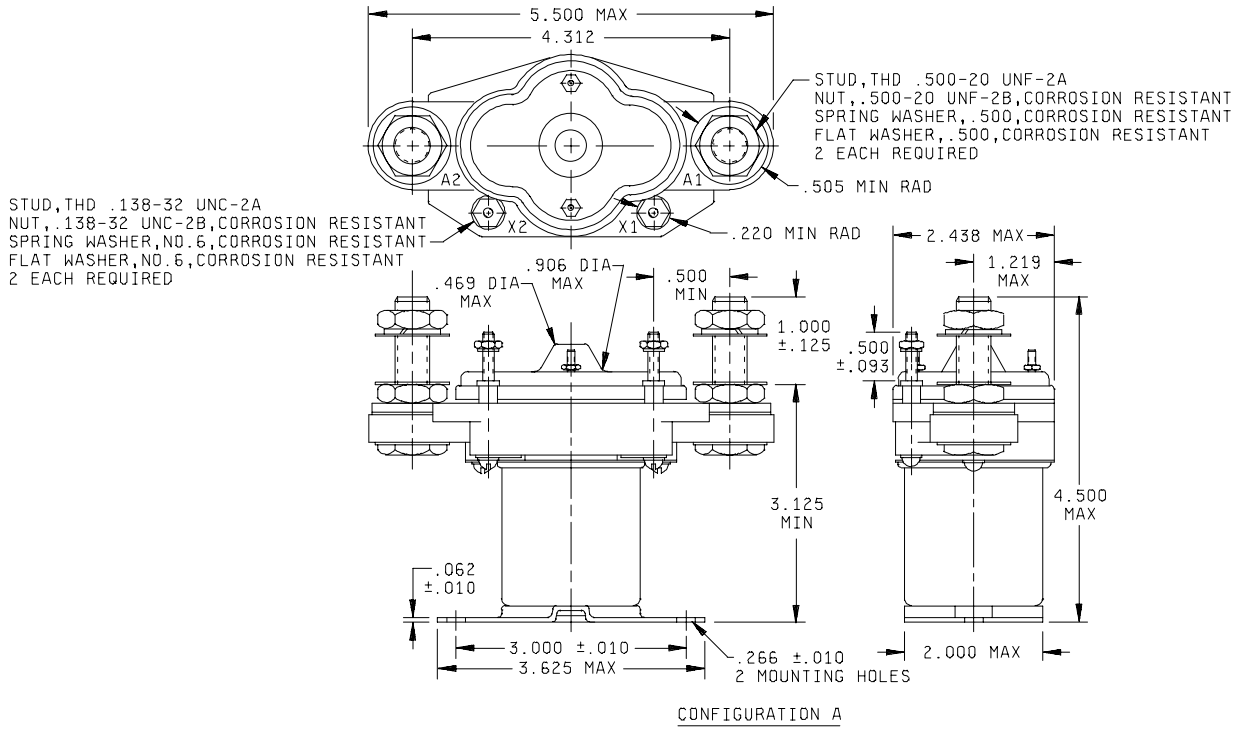

FIGURE 1. Dimensions and configurations

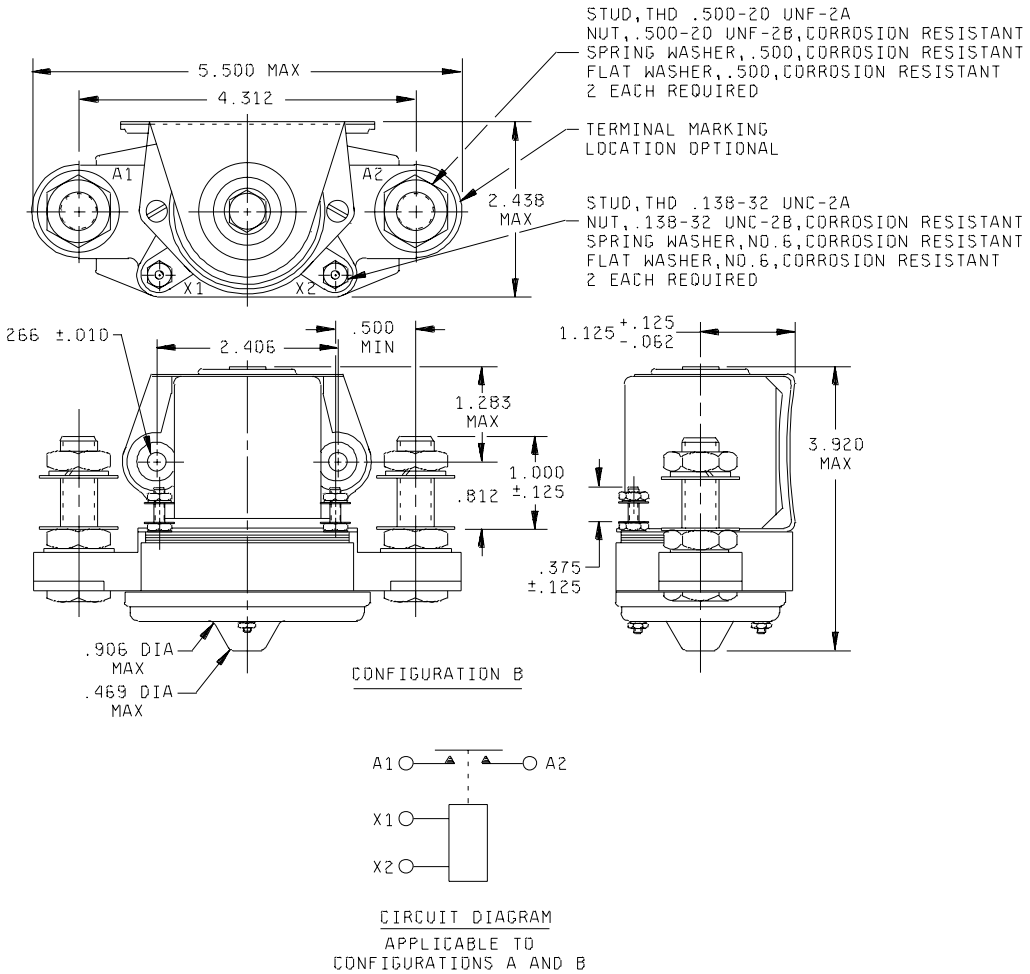

Inches	mm	Inches	mm	Inches	mm	Inches	mm
.010	0.25	.375	9.53	1.219	30.96	3.635	92.33
.062	1.57	.500	12.70	1.273	32.33	3.920	99.57
.125	2.36	.505	12.83	2.000	50.80	4.312	109.52
.146	3.71	.812	20.62	2.406	61.11	4.500	114.30
.157	3.99	.936	23.77	2.438	61.92	5.500	139.70
.220	5.59	1.000	25.40	3.000	76.20		
.266	6.76	1.125	28.58	3.356	85.24		

FIGURE 1. Dimensions and configurations - Continued.

NOTES:

1. Dimensions are in inches.
2. Metric equivalents are given for general information only.
3. Unless otherwise specified, tolerance is ±.062 (1.57 mm).
4. Additional flat washer may be used for terminal seat.
5. Terminal temperature rise under continuous current conditions shall be 95°C. Mixed loads shall be conducted at 71°C.
6. In the event of a conflict between the text of this document and the references cited herein, the text of this document shall take precedence.
7. Referenced Government documents of the issue listed in that issue of the Department of Defense Index of Specifications and Standards (DODISS) specified in the solicitation form a part of this document to the extent specified herein.
8. Shape of relay is optional within the envelope dimensions shown.
9. Cadmium or cadmium compounds are prohibited on external hardware. A transition period to non-cadmium hardware is authorized for up to 1 year from the date of this revision.
10. Spring washer on drawing is a spring lock washer.

FIGURE 1. Dimensions and configurations - Continued.

REQUIREMENTS:

Dimensions and configurations: See figure 1.

Dash number and general characteristics: See table I.

Contact data:

Load ratings: See table II.

Maximum contact drop, initial: 0.175 V.

After life test: 0.200 V.

Overload current (N.O.): 3,200 amperes.

Rupture current (N.O.): 4,000 amperes.

Coil data: See table III.

Duty rating: Intermittent.

Electrical data:

Minimum insulation resistance:

Initial: 100 megohms.

After life or environmental test: 50 megohms.

Dielectric strength

Sea level, 2-5 seconds:

	Initial		After life tests	
	28 V dc	115 V ac	28 V dc	115 V ac
Coil to case	1,250 V rms	N/A	1,000 V rms	N/A
Aux contacts	1,250 V rms	N/A	1,000 V rms	N/A
All other points	1,250 V rms	N/A	1,000 V rms	N/A

Altitude, 1 minute:

	28 V dc	115 V ac
Coil to case	500	N/A
Aux contacts	500	N/A
All other points	500	N/A

Environmental characteristics:

Temperature range: -55°C to +71°C.

Maximum altitude rating: 50,000 feet.

Shock, g-level: 25 g's.

Duration: 6-9 ms.

Maximum duration contact opening: 2 ms.

Vibration, sinusoidal: See table IV.

Vibration, random: N/A.

Acceleration: 10 g's.

Part or Identifying Number (PIN): MS24179- (plus applicable dash number from table I).

TABLE I. Dash numbers and general characteristics.

Dash number MS24179-	Type	Coil	Terminal type	Mounting or mating socket	Max weight (pounds)
D1	III	dc	Stud	Bracket - bottom	2.6
D2	III	dc	Stud	Bracket - side	2.6

TABLE II. Rated contact load (amperes per pole) case grounded. 1/

Type of load	Life operating cycles x 10^3	28 V dc				115 V ac, 1 phase				115/200 V ac, 3 phase				See appropriate notes
		Main		Aux		Main		Aux		Main		Aux		
		NO	NC	NO	NC	400 Hz	60 Hz	400 Hz	60 Hz	400 Hz	60 Hz	400 Hz	60 Hz	
Resistive	50	400												
Inductive	10	100												
Motor	50	400												
Lamp														
Transfer load														2/
Mechanical life reduced current	100	100												
Mixed loads														

1/ Absence of value indicates parameter is not applicable to this specification.
2/ Transfer load indicates relay is suitable for transfer between unsynchronized ac power supplies at the rating indicated.

TABLE III. Operating characteristics.

PIN MS24179-	Coil data											Time (milliseconds - maximum)					
	Coil	Rated			Max		Max pick-up voltage			Hold volt-age 2/	Drop out voltage 2/	Operate 3/	Release 4/	Bounce			
														Main		Aux	
		Volts 1/	Freq Hz	ResΩ +15% -10%	Volts	Amperes	Normal 2/	High temp test	Cont current test					NO	NC	NO	NC
D1	X1,X2	28	dc	9.6	29	3.4	7.5	8.75	9.4	3.0	0.5	20	15	5			
D2	X1,X2	28	dc	9.6	29	3.4	7.5	8.75	9.4	3.0	0.5	20	15	5			

1/ CAUTION: Use of any coil voltage less than rated coil voltage will compromise the operation of the relay.
2/ Over the temperature range.
3/ With rated coil voltage.
4/ From rated coil voltage.

TABLE IV. Vibration levels (sinusoidal).

5-10 Hz	10-55 Hz	55-250 Hz	250-500 Hz
.08	.06 DA	2 g's	2 g's

Qualification by similarity: See table V.

Supersession data: See table VI.

TABLE VI. Supersession data.

Canceled PIN	Superseding PIN
AN3381-1	MS24179-D2
AN3381-2	MS24179-D1

Custodians:
Navy - AS
Air Force - 11
DLA - CC

Review activities:
Navy - EC
Air Force - 99

Preparing activity:
DLA - CC

(Project 5945-1206-15)