Downloaded from http://www.everyspec.com

FSC 1680

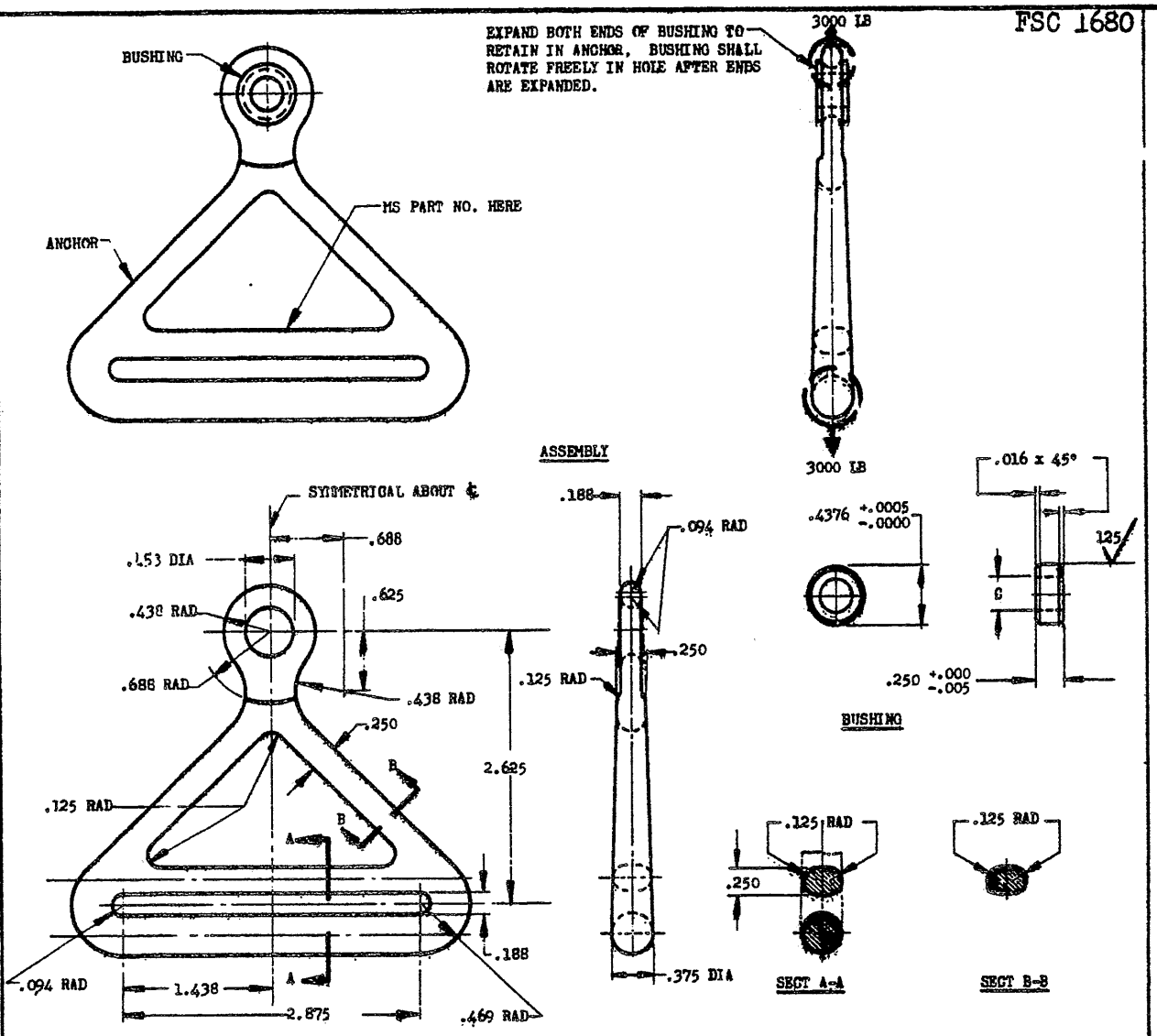

MS ASSY NO.	CLEVIS BOLT SIZE	BUSHING HOLE C DIA +.002 -.000
MS22010-1	.250	.249
MS22010-2	.312	.312

MATERIAL: ANCHOR, STEEL, SPECIFICATION MIL-S-5626 OR SPECIFICATION MIL-S-6049
BUSHING, STEEL, SPECIFICATION MIL-S-5626, MIL-S-6049, MIL-S-6758, MIL-S-6050, MIL-T-6736, TYPE I OR MIL-T-6732, TYPE I.

METHOD OF FORMING: ANCHOR, HOT FORGE.

HEAT TREATMENT: IN ACCORDANCE WITH SPECIFICATION MIL-H-6875,
ANCHOR: 170,000 TO 190,000 LB/SQ IN. TENSILE STRENGTH.
BUSHING: 90,000 TO 120,000 LB/SQ IN. TENSILE STRENGTH.
DECARBURIZATION SHALL NOT EXCEED .010.

FINISH: CADMIUM PLATE, SPECIFICATION QQ-P-416, TYPE I, CLASS A AFTER ASSEMBLY.

FOR SURFACE ROUGHNESS, SEE STANDARD MIL-STD-10.

ANCHOR SHALL BE SMOOTH AND FREE FROM FINS AND PITS.

DIMENSIONS IN INCHES. UNLESS OTHERWISE SPECIFIED, TOLERANCES: DECIMALS ±.016, ANGLES ±5°.

ANCHOR ASSEMBLY SHALL BE SUBJECTED TO THE PROOF LOADS SPECIFIED HEREON, AS INDICATED BY THE ARROWS.

PROOF LOAD TO BE APPLIED AT THE RATE OF 30,000 LB PER SQ IN. PER MINUTE, IN ACCORDANCE WITH SPECIFICATION QQ-M-151.

APPROVED 16 Apr 53 REVISED

NOTICE: When Government drawings, specifications, or other data are used for any purpose other than in connection with a definitely related Government procurement operation, the United States Government thereby incurs no responsibility, nor any obligation whatsoever; and the fact that the Government may have formulated, furnished, or in any way supplied the said drawings, specifications, or other data is not to be regarded by implication or otherwise as in any manner licensing the holder or any other person or corporation, or conveying any rights or permission to manufacture, use, or sell any patented invention that may in any way be related thereto.

CUSTODIANS	OTHER INT.
Navy - BuAer	A -
Air Force	N -
Army - T	AF -

MILITARY STANDARD

ANCHOR - LAP SAFETY BELT

MS22010