FED. SUP CLASS
6115

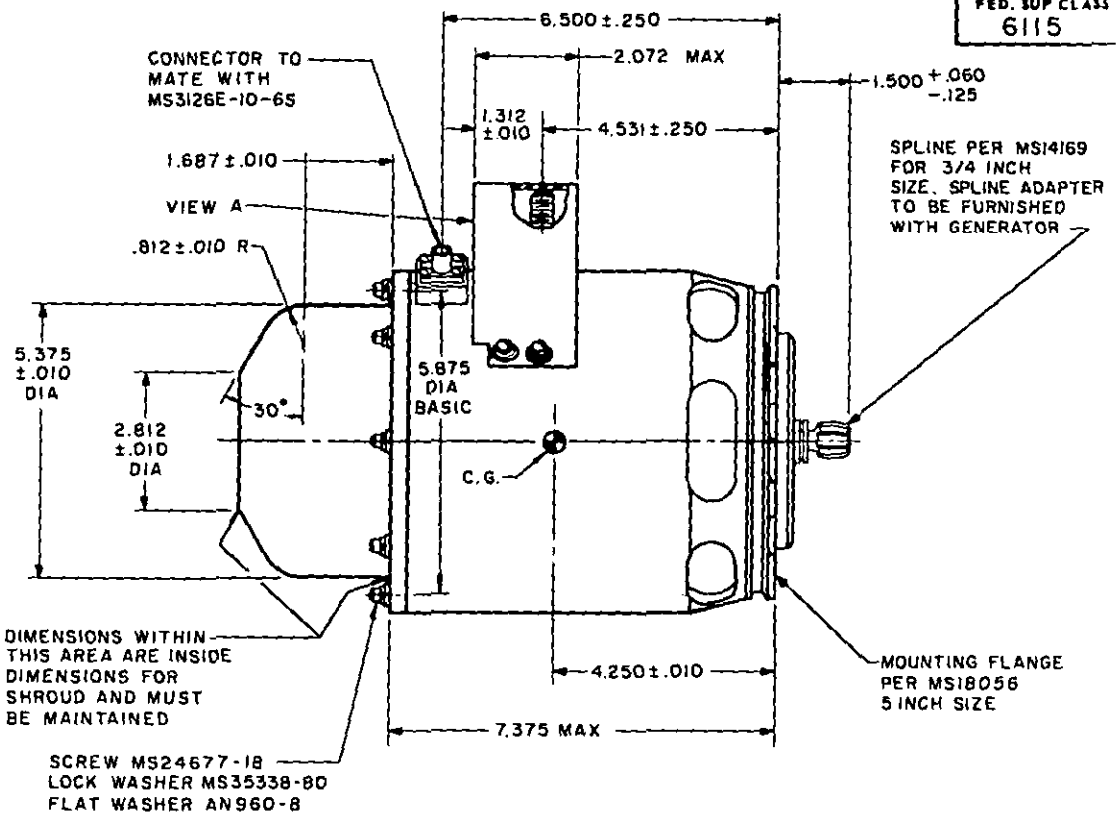

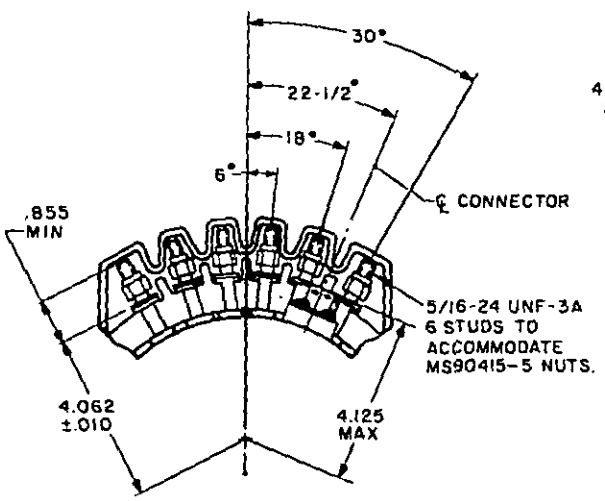

VIEW A

GENERATOR
P/N MS21970-1

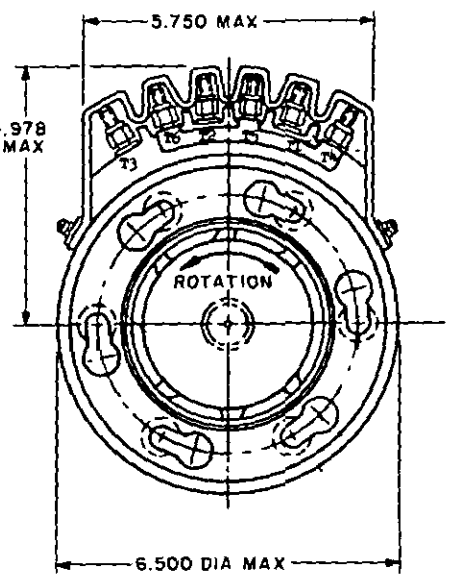

MOUNTING END

APPROVED 18 JULY 196 ... SEC SH. 3, REV ... 27 SEPT 1970 ⓐ 10 Feb 1976

ⓐ ENTIRE STANDARD REVISED AND REDRAWN

P.A. NAVY – AS Other Cust	TITLE GENERATOR SYSTEM, 10 KVA, 400 HERTZ, ALTERNATING CURRENT, INTEGRALLY EXCITED, BRUSHLESS TYPE, A-4 AIRCRAFT	MILITARY STANDARD MS21970 (AS)
PROCUREMENT SPECIFICATION MIL-G-21480	SUPERSEDES:	SHEET 1 OF 6

DD FORM 1 MAR 72 672-1 (Limited coordination) PREVIOUS EDITIONS OF THIS FORM ARE OBSOLETE. PROJECT NO. 6115-N404 PLATE NO. 23071

FED. SUP CLASS 6115

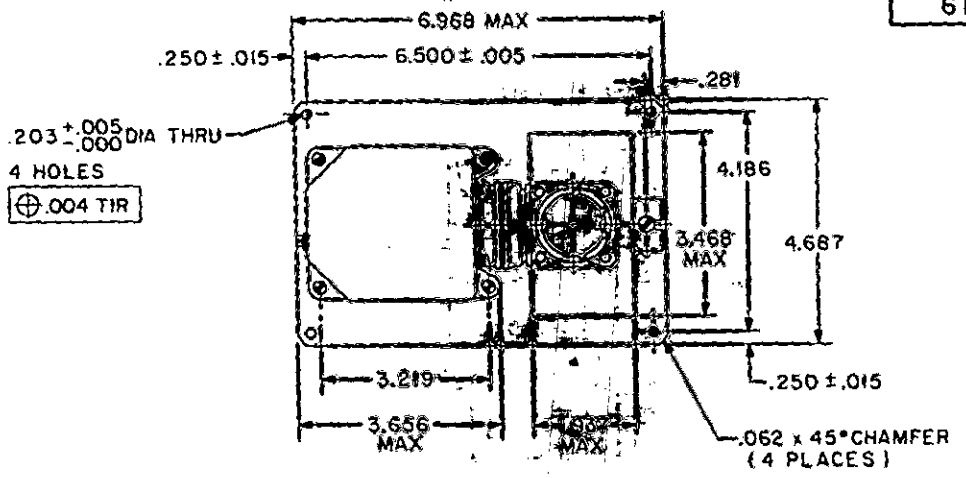

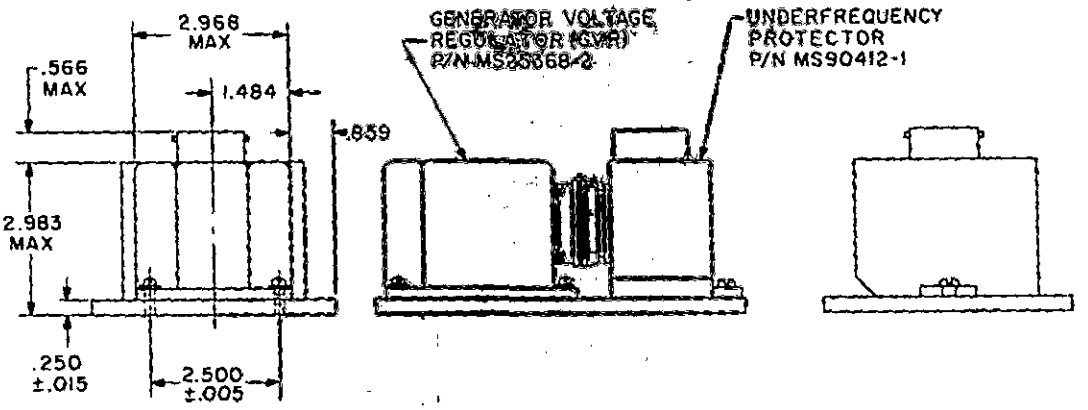

CONTROL COMPONENTS

GENERATOR DATA	
RATED VOLTAGE	120/208 V
RATED OUTPUT	10 KVA
PHASE	3
RATED POWER FACTOR	0.75 LAG TO 1.0
FREQUENCY RANGE	380/480 HZ
SPEED RANGE	7600/8400 RPM
MAX SPEED FOR REGULATION	10000 RPM
OVERSPEED	11000 RPM
MIN EFFICIENCY AT RATED LOAD	80%
MAX WEIGHT	34 LBS
MAX OVERHUNG MOMENT	150 IN-LBS
SHEAR	690 IN-LBS
FLEXIBLE DRIVE	REQUIRED

APPROVED 18 JULY 1961 REVISED (8) FOR CHANGES SEE SHEETS 1 THRU 6

This military standard is approved by NAVAL AIR SYSTEMS COMMAND, Department of the Navy and shall be used by that activity. All other military activities are required to employ this standard where suitable.

P.A. NAVY - AS Other Cust	TITLE GENERATOR SYSTEM, 10 KVA, 400 HERTZ, ALTERNATING CURRENT, INTEGRALLY EXCITED, BRUSHLESS TYPE, A-4 AIRCRAFT	MILITARY STANDARD MS21970 (AS)
PROCUREMENT SPECIFICATION MIL-G-21480	SUPERSEDES:	SHEET 2 OF 6

DD FORM 1 MAR 72 672-1 (Limited coordination) PREVIOUS EDITION OF THIS FORM ARE OBSOLETE. PLATE NO. 23871

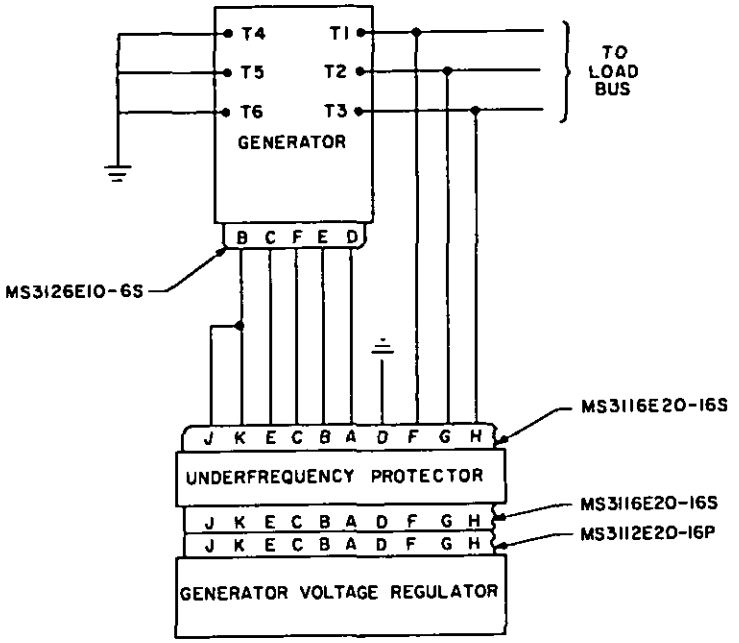

TEST CIRCUIT

REQUIREMENTS:

1 THE AIRCRAFT MANUFACTURER SHALL PROVIDE CONNECTING LEADS SHOWN.

2. THE REQUIREMENTS OF MIL-G-21480 PERTAIN WITH THE FOLLOWING EXCEPTIONS:

DELETE THE FOLLOWING PARAGRAPHS:

3.4.2.1 THROUGH 3.4.2.8, 3.4.6, 3.4.7, 3.5.7.2, 3.5.7.3, 3.5.7.5 THROUGH 3.5.7.7, 4.5.16, 4.5.20, 4.5.22.1 THROUGH 4.5.22.3, 4.5.22.3.1 THROUGH 4.5.22.3.4, 4.5.24.1, 4.5.24.2, 4.5.24.2.1 THROUGH 4.5.24.2.5, 4.5.24.3, 4.5.24.3.1 THROUGH 4.5.24.3.4, 4.5.25.1, 4.5.25.2, 4.5.25.2.1.

3.4.2 DELETE AND ADD: ENVIRONMENTAL REQUIREMENTS - THE SYSTEM SHALL MEET THE REQUIREMENTS OF MIL-E-81910 WITH THE FOLLOWING EXCEPTIONS. THE GENERATOR SHALL BE CAPABLE OF CONTINUOUS 10 KVA OUTPUT AT SEA LEVEL WHEN OPERATED UNDER SELF-COOLED CONDITIONS. FOR GENERATOR VIBRATION TESTING, THE AMPLITUDE OF VIBRATION MONITORED AT THE ANTI-DRIVE END OF THE GENERATOR DURING THE MAIN BENDING MODE SHALL BE LIMITED TO 20G'S BUT THE VIBRATION INPUT SHALL NOT BE LOWERED BELOW 5G'S.

3.4.8 CHANGE "FIGURE 3" TO "FIGURE 1" OF THIS SPECIFICATION.

3.4.9.6.1 ADD: AN INTEGRAL FAN SHALL BE PROVIDED FOR SELF COOLING.

3.4.9.6.1.1 CHANGE "10,000 HOUR LIFE" TO "1000 HOUR LIFE".

3.4.10 NOT APPLICABLE FOR MS90412-1 UNDERFREQUENCY PROTECTOR.

3.4.13.2 NOT APPLICABLE FOR MS90412-1 UNDERFREQUENCY PROTECTOR.

3.4.17 ADD: THE SYSTEM SHALL HAVE A MINIMUM ELAPSED TIME OF 2000 HOURS BETWEEN MAINTENANCE ACTIONS.

APPROVED 18 JULY 1961 REVISED (B) FOR CHANGES SEE SHEETS 1 THRU 6

3.5.1 CHANGE "FIGURE 3" TO "FIGURE 1" OF THIS SPECIFICATION.

3.5.4 DELETE AND ADD: MAXIMUM - THE CREST FACTOR FOR EACH PHASE VOLTAGE WAVEFORM SHALL BE 1.41 ± 10%. NO SINGLE HARMONIC SHALL EXCEED 3% OF THE FUNDAMENTAL. THE TOTAL HARMONIC CONTENT SHALL NOT EXCEED 5% FOR ALL NORMAL OPERATING CONDITIONS OF THE SYSTEM.

3.5.5 ADD: THE PERMANENT MAGNET GENERATOR USED FOR INTEGRAL CONTROL POWER SHALL RECOVER TO NORMAL VOLTAGE AFTER A SHORT CIRCUIT UNLESS IT CAN BE REMAGNETIZED WITHOUT DISASSEMBLY OF THE GENERATOR. NO LOAD PMG VOLTAGE SHALL BE 39 TO 41 VOLTS AT 800 HZ.

3.5.7.4 DELETE AND ADD: UNDERFREQUENCY - THE UNDERFREQUENCY PROTECTOR SHALL PROVIDE MEANS OF PREVENTING A FREQUENCY OF LESS THAN 362.5 HZ BEING IMPRESSED ON THE LOAD BUS FOR A PERIOD IN EXCESS OF 0.1 SECOND. THE DEVICE SHALL HAVE A MAXIMUM PICK-UP OF 387.5 HZ.

3.5.8 DELETE AND ADD: ELECTROMAGNETIC INTERFERENCE - THE SYSTEM SHALL MEET THE REQUIREMENTS OF MIL-E-81910, CLASS NO. XIII FOR THE GENERATORS AND CONTROL EQUIPMENT, EXCEPT THE TEN MICROFARAD FEED-THROUGH CAPACITOR SHALL BE REMOVED.

4.4.2.1 ADD: QUALIFICATION TESTS SHALL BE SUPPLEMENTED WITH A MINIMUM 100 HOUR FAILURE FREE FLIGHT TEST BEFORE CONSIDERATION IS GIVEN TO INCORPORATING THE ITEM ON THE QUALIFIED PRODUCTS LIST.

4.4.1.2.1 DELETE AND ADD: AIR COOLED GENERATORS - THE GENERATOR INLET AIR TEMPERATURE SHALL BE KEPT WITHIN 5°C OF THE TEMPERATURE SPECIFIED BY THE INDIVIDUAL TESTS. THE GENERATOR SHALL BE SELF COOLING, NO EXTERNAL BLAST AIR PROVIDED.

4.4.2.3.1 DELETE AND ADD: AIR COOLED GENERATORS - THE GENERATOR SHALL BE SELF COOLING, NO EXTERNAL BLAST AIR PROVIDED.

4.5.3.1 CHANGE "FIGURE 3" TO "FIGURE 1" OF THIS SPECIFICATION.

4.5.3.2 CHANGE "FIGURE 3" TO "FIGURE 1" OF THIS SPECIFICATION.

4.5.9 DELETE ALL AFTER (D) AND ADD:

(D) AT MINIMUM, MAXIMUM, AND AVERAGE RATED GENERATOR RPM. THE EFFICIENCY AT FULL LOAD SHALL NOT BE LESS THAN 80%.

4.5.12 DELETE AND ADD: ELECTROMAGNETIC INTERFERENCE - THE GENERATOR, GVR, AND UNDERFREQUENCY PROTECTOR SHALL BE SUBJECTED TO AN ELECTROMAGNETIC INTERFERENCE TEST IN ACCORDANCE WITH MIL-E-81910, EXCEPT THE 10 MICROFARAD FEED-THROUGH CAPACITOR SHALL BE REMOVED.

4.5.13 DELETE PART (C) AND ADD:

(C) CONDITIONS (A) AND (B) SHALL BE REPEATED AT AVERAGE AND MAXIMUM RATED SPEEDS. THE LINE-NEUTRAL CREST FACTOR OBTAINED BY THE ABOVE TEST SHALL BE 1.41 ± 10%. THE VALUE OF ANY SINGLE HARMONIC DURING THE ABOVE TEST SHALL NOT EXCEED 3% OF THE FUNDAMENTAL. THE TOTAL HARMONIC CONTENT SHALL NOT EXCEED 5%.

4.5.20.1 DELETE AND ADD: SALT FOG, CONTROL COMPONENTS - THE GVR AND UNDER-FREQUENCY PROTECTOR SHALL BE SUBJECTED TO A SALT FOG TEST IN ACCORDANCE WITH MIL-E-81910. AT THE COMPLETION OF THIS TEST THE UNIT SHALL SUCCESSFULLY DEMONSTRATE ITS BUILD-UP CHARACTERISTICS, THE EFFECTS OF APPLICATION AND REMOVAL OF RATED AND 200% LOAD, AND PROTECTIVE FUNCTIONS.

4.5.20.2 DELETE AND ADD: OIL-SALT WATER IMMERSION, GENERATORS - THE GENERATOR SHALL BE SUBJECTED TO AN OIL-SALT WATER IMMERSION TEST IN ACCORDANCE WITH MIL-E-81910. AT THE COMPLETION OF THIS TEST THE UNIT SHALL SUCCESSFULLY DEMONSTRATE ITS BUILD-UP CHARACTERISTICS AND THE EFFECTS OF APPLICATION AND REMOVAL OF RATED AND 200% LOAD.

4.5.21 DELETE AND ADD: FUNGUS RESISTANCE - THE GENERATOR, GVR, AND UNDER-FREQUENCY PROTECTOR SHALL BE SUBJECTED TO A FUNGUS TEST IN ACCORDANCE WITH MIL-E-81910, WITH THE INSTALLATION INSTRUCTIONS AND MOUNTING NUTS (AS REQUIRED BY PARAGRAPH 4.3.1) ATTACHED. AT THE COMPLETION OF THIS TEST THE UNIT SHALL SUCCESSFULLY DEMONSTRATE ITS BUILD-UP CHARACTERISTICS, THE EFFECT OF APPLICATION AND REMOVAL OF RATED AND 200% LOAD, AND PROTECTIVE FUNCTIONS. MOUNTING NUTS ARE TO BE UNAFFECTED AND THE PACKAGE HOLDING THE NUTS SUITABLE FOR SHIPMENT. INSTRUCTIONS ARE TO BE LEGIBLE.

4.5.22 DELETE AND ADD: SAND AND DUST - THE GENERATOR SHALL BE SUBJECTED TO A SAND AND DUST TEST IN ACCORDANCE WITH MIL-E-81910. AT THE COMPLETION OF THIS TEST THE UNIT SHALL SUCCESSFULLY DEMONSTRATE ITS BUILD-UP CHARACTERISTICS AND THE EFFECT OF APPLICATION AND REMOVAL OF RATED AND 200% LOAD.

APPROVED 18 JULY 1961 REVISED (B) FOR CHANGES SEE SHEETS 1 THRU 6

4.5.23.1.1 DELETE AND ADD: VIBRATION, GENERATOR - THE GENERATOR SHALL BE SUBJECTED TO A VIBRATION TEST IN ACCORDANCE WITH MIL-E-81910, EXCEPT THAT THE AMPLITUDE OF VIBRATION MONITORED AT THE ANTIDRIVE END OF THE GENERATOR DURING THE MAIN BENDING MODE SHALL BE LIMITED TO 20 G'S, BUT THE VIBRATION INPUT SHALL NOT BE LOWERED BELOW 5 G'S. AT THE COMPLETION OF THIS TEST THE UNIT SHALL SUCCESSFULLY DEMONSTRATE ITS BUILDUP CHARACTERISTICS AND THE EFFECT OF APPLICATION AND REMOVAL OF RATED AND 200% LOAD.

4.5.23.1.2 DELETE AND ADD: VIBRATION, CONTROL COMPONENTS - THE GVR AND UNDERFREQUENCY PROTECTOR SHALL BE SUBJECTED TO A VIBRATION TEST IN ACCORDANCE WITH MIL-E-81910. AT THE COMPLETION OF THIS TEST THE UNIT SHALL SUCCESSFULLY DEMONSTRATE ITS BUILD-UP CHARACTERISTICS, THE EFFECT OF APPLICATION AND REMOVAL OF RATED AND 200% LOAD, AND PROTECTIVE FUNCTIONS.

4.5.24 DELETE AND ADD: SHOCK - THE GENERATOR, GVR, AND UNDERFREQUENCY PROTECTOR SHALL BE SUBJECTED TO A SHOCK TEST IN ACCORDANCE WITH MIL-E-81910. AT THE COMPLETION OF PROCEDURE I, THE UNIT SHALL SUCCESSFULLY DEMONSTRATE ITS BUILD-UP CHARACTERISTICS, THE EFFECT OF APPLICATION AND REMOVAL OF RATED AND 200% LOAD, AND PROTECTIVE FUNCTIONS. THERE SHALL BE NO FAILURE OF THE MOUNTING ATTACHMENTS, AND THE TEST ITEM SHALL REMAIN IN PLACE AND NOT CREATE A HAZARD DURING PROCEDURE III.

4.5.25 DELETE AND ADD: HUMIDITY - THE GENERATOR, GVR, AND UNDERFREQUENCY PROTECTOR, EXCEPT THOSE TESTED UNDER PARAGRAPH 4.5.20.2, SHALL BE SUBJECTED TO A HUMIDITY TEST IN ACCORDANCE WITH MIL-E-81910. AT THE COMPLETION OF THIS TEST THE UNIT SHALL SUCCESSFULLY DEMONSTRATE ITS BUILD-UP CHARACTERISTICS, THE EFFECT OF APPLICATION AND REMOVAL OF RATED AND 200% LOAD, AND PROTECTIVE FUNCTIONS.

4.5.30 DELETE FIRST SENTENCE AND ADD: ALL SYSTEM COMPONENTS EXCEPT THE GENERATOR SHALL BE SUBJECTED TO THE ACCELERATION TEST OF MIL-E-81910. AT THE COMPLETION OF THIS TEST THE UNIT SHALL SUCCESSFULLY DEMONSTRATE ITS BUILD-UP CHARACTERISTICS, THE EFFECT OF APPLICATION AND REMOVAL OF RATED AND 200% LOAD, AND PROTECTIVE FUNCTIONS.

NOTES:

1. DIMENSIONS IN INCHES. UNLESS OTHERWISE SPECIFIED, TOLERANCES: DECIMALS ± .031, ANGLES ± 1°.
2. ALL OUTLINE DIMENSIONS ARE LIMITING DIMENSIONS ONLY.
3. FOR DESIGN FEATURE PURPOSES, THIS DOCUMENT TAKES PRECEDENCE OVER PROCUREMENT DOCUMENTS REFERENCED HEREIN. REFERENCE DOCUMENTS SHALL BE OF THE ISSUE IN EFFECT ON DATE OF INVITATION FOR BIDS.

ITEM	PART NUMBER
COMPLETE SYSTEM (CONSISTS OF ONE GENERATOR, ONE GENERATOR VOLTAGE REGULATOR, AND ONE UNDERFREQUENCY PROTECTOR)	MS21970-10
GENERATOR	MS21970-1
GENERATOR VOLTAGE REGULATOR	MS25368-2
UNDERFREQUENCY PROTECTOR	MS90412-1

APPROVED 18 JULY 1961 REVISED (B) FOR CHANGES SEE SHEETS 1 THRU 6

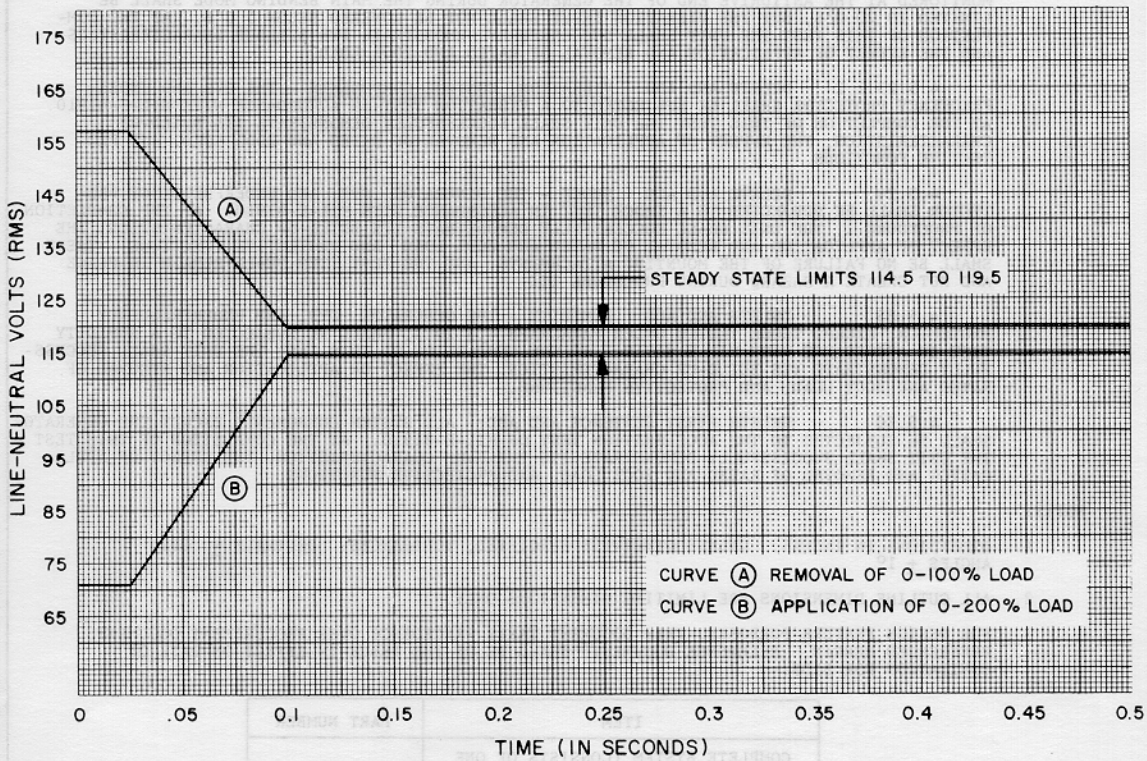

FIGURE 1. SYSTEM VOLTAGE LIMITS

APPROVED 18 JULY 1961 REVISED (B) FOR CHANGES SEE SHEETS 1 THRU 6

This military standard is approved by NAVAL AIR SYSTEMS COMMAND, Department of the Navy and shall be used by that activity. All other military activities are required to employ this standard where suitable.

P.A. NAVY - AS Other Cust	TITLE GENERATOR SYSTEM, 10 KVA, 400 HERTZ, ALTERNATING CURRENT, INTEGRALLY EXCITED, BRUSHLESS TYPE, A-4 AIRCRAFT	MILITARY STANDARD MS21970 (AS)
PROCUREMENT SPECIFICATION MIL-G-21480	SUPERSEDES:	SHEET 6 OF 6

☆U.S. GOVERNMENT PRINTING OFFICE: 1978 — 703-122/1237