Downloaded from http://www.everyspec.com

INCH-POUND

MS21254V
w/AMENDMENT 1
17 February 2009
SUPERSEDING
MS21254V
12 October 2007

DETAIL SPECIFICATION SHEET

# EYE END, TURNBUCKLE, CLIP LOCKING

This specification is approved for use by all Departments and Agencies of the Department of Defense.

The requirements for acquiring the product described herein shall consist of this specification sheet, MIL-DTL-8878, and QPL-8878.

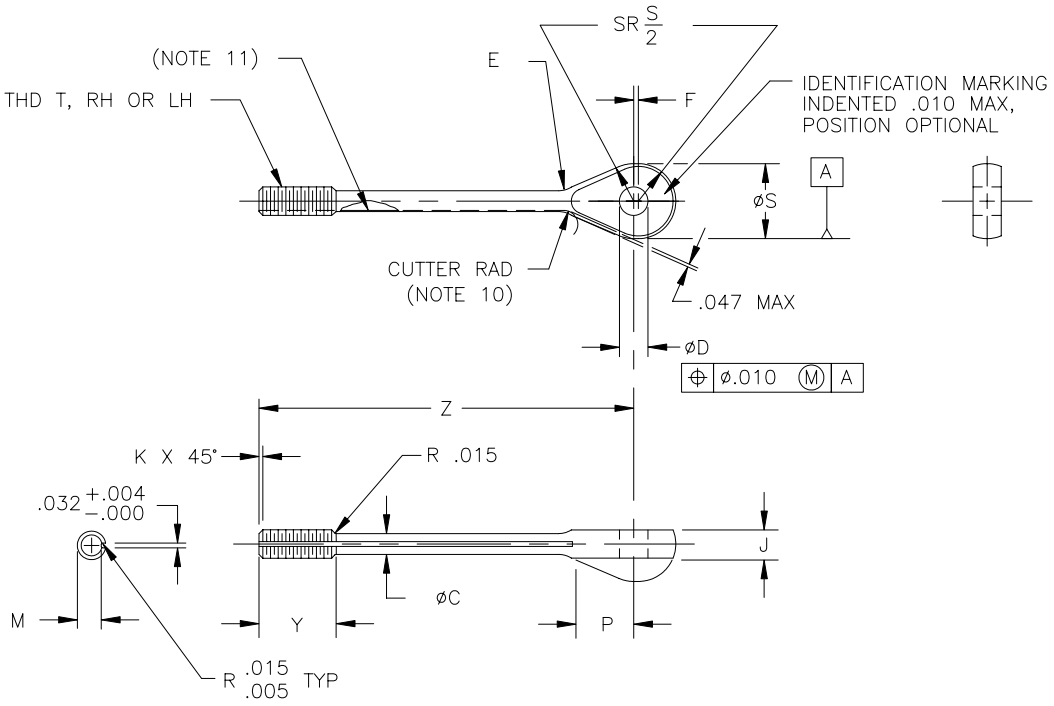


FIGURE 1. Eye end, turnbuckle, clip locking.

Downloaded from http://www.everyspec.com



TABLE I. Dash numbers and dimensions.

| Dash number | | Wire rope diameter | | Minimum breaking strength lbs. | Thread T UNF-3A | ∅C +0.006 -0.000 | ∅D +0.002 -0.000 | E ±0.031 radius | F +0.010 -0.000 | J ±0.005 |
|---|---|---|---|---|---|---|---|---|---|---|
| Direction of thread | | | | | | | | | | |
| RH | LH | Nominal reference | Minimum | | | | | | | |
| -2RS | -2LS | 1/16 | 0.062 | 800 | 0.1380 (#6)-40 | 0.094 | 0.190 | 0.125 | 0.031 | 0.125 |
| -2RL | -2LL | | | | | | | | | |
| -3RS | -3LS | 3/32 | 0.093 | 1,600 | 0.190 (#10)-32 | 0.133 | | 0.156 | | 0.188 |
| -3RL | -3LL | | | | | | | | | |
| -5RS | -5LS | 5/32 1/ | 0.156 | 3,200 | 0.250 (1/4)-28 | 0.189 | 0.250 | 0.219 | 0.047 | 0.219 |
| -5RL | -5LL | | | | | | | | | |
| -6RS | -6LS | 3/16 | 0.187 | 4,600 | 0.3125 (5/16)-24 | 0.243 | 0.313 | 0.250 | | 0.281 |
| -6RL | -6LL | | | | | | | | | |
| -8RL | -8LL | 1/4 | 0.250 | 8,000 | 0.3750 (3/8)-24 | 0.306 | 0.375 | 0.281 | 0.063 | 0.328 |
| -9RL | -9LL | 9/32 | 0.281 | 12,500 | 0.4375 (7/16)-20 | 0.362 | 0.438 | 0.359 | 0.078 | 0.375 |
| -10RL | -10LL | 5/16 | 0.312 | 17,500 | 0.5000 (1/2)-20 | 0.425 | 0.500 | 0.406 | | 0.469 |

1/ See note 6.

TABLE I. Dash numbers and dimensions - Continued.

| Dash number | | Wire rope diameter | | K +0.000 -0.015 | M | | P ±0.031 | ∅S +0.025 -0.010 | Y ±0.047 2/ | Z +0.031 -0.015 |
|---|---|---|---|---|---|---|---|---|---|---|
| Direction of thread | | | | | | | | | | |
| RH | LH | Nominal reference | Minimum | | Maximum | Minimum | | | | |
| -2RS | -2LS | 1/16 | 0.062 | 0.031 | 0.1139 | 0.1094 | 0.325 | 0.375 | 0.375 | 1.500 |
| -2RL | -2LL | | | | | | | | | 2.375 |
| -3RS | -3LS | 3/32 | 0.093 | | 0.1638 | 0.1568 | 0.416 | 0.500 | 0.500 | 1.625 |
| -3RL | -3LL | | | | | | | | | 2.500 |
| -5RS | -5LS | 5/32 | 0.156 | | 0.2224 | 0.2152 | 0.512 | 0.625 | 0.625 | 1.750 |
| -5RL | -5LL | | | | | | | | | 2.625 |
| -6RS | -6LS | 3/16 | 0.187 | 0.047 | 0.2830 | 0.2754 | 0.527 | 0.688 | 0.750 | 1.875 |
| -6RL | -6LL | | | | | | | | | 2.750 |
| -8RL | -8LL | 1/4 | 0.250 | | 0.3454 | 0.3378 | 0.678 | 0.875 | 0.875 | 2.875 |
| -9RL | -9LL | 9/32 | 0.281 | | 0.4052 | 0.3972 | 0.831 | 1.063 | 1.000 | 3.375 |
| -10RL | -10LL | 5/16 | 0.312 | 0.063 | 0.4678 | 0.4597 | 0.900 | 1.188 | | 3.625 |

2/ Includes last full thread engagement.

REQUIREMENTS:

1. Material: Material shall be in accordance with MIL-DTL-8878.

2. Protective treatment: Protective treatment shall be in accordance with MIL-DTL-8878.

3. Heat treatment: Heat treatment shall be in accordance with MIL-DTL-8878.

4. Finish: Finish shall be in accordance with MIL-DTL-8878.

5. Threads: Threads shall be in accordance with FED-STD-H28/20.

6. Tolerances: Unless otherwise specified, tolerances: decimals ± 0.010, angles ± 0.5°.

7. Outside diameter (O.D.): O.D. of the "F" dimension may be a flat area.

Downloaded from http://www.everyspec.com



NOTES:

1. Part or identifying number (PIN): The part or identifying number (PIN) consists of the letters MS, the specification sheet number, and a dash number taken from table I. A "C" in lieu of dash indicates 17-4PH; a dash indicates carbon or alloy steel. The first letter following the dash number or letter C indicates direction of thread (left or right hand) and the second letter indicates length (short or long).

EXAMPLE: MS 21254 - 3RL

- 3RL — Dash number (see table I)
- - — Use C for 17-4PH or dash for carbon or alloy steel
- 21254 — Specification sheet number
- MS — MS prefix

MS21254C3LS Indicates - Eye, turnbuckle, 17-4PH, 0.1900 (#10)-32 left hand thread, short.
MS21254-3RL Indicates - Eye, turnbuckle, steel, 0.1900 (#10)-32 right hand thread, long.

2. Remove burrs and sharp edges. (See MIL-DTL-8878.)

3. Dimensions are in inches.

4. Interpret drawing in accordance with ASME Y14.5M.

5. MS21254 items can replace AN165 items of like thread size and material.

6. For 0.125 (1/8) inch diameter wire rope use -5 parts, minimum breaking strength 2,200 pounds (lbs.) (reference).

7. In the event of a conflict between the text of this document and the references cited herein, the text of this document takes precedence.

8. Unless otherwise specified, issues of referenced documents are those in effect at the time of solicitation.

9. For clip locking of turnbuckles, see MS33736 and MIL-DTL-8878.

10. Cutter radius mark, which is used as a clip slot alignment indicator, must be present on this surface.

11. Cutter radius marks are permitted on this surface and shall not be cause for rejection.

Downloaded from http://www.everyspec.com



12. The parts covered by dash numbers shown on AN165 are canceled after 10 December 1971. Steel, carbon and alloy MS21254 parts are inactive for new design. Use only 17-4 PH stainless steel parts for new design and replacement for comparable alloy and carbon steel MS21254 parts and AN165 parts. The canceled AN165 parts and alloy and carbon steel MS21254 parts cannot replace comparable 17-4 PH stainless parts and should be used until existing stock is depleted. Substitution shall be in accordance with table II.

TABLE II. Substitution table.

| PART NUMBERS | | |
|---|---|---|
| Canceled part AN165 | Inactive part MS21254 | 17.4 PH Stainless steel part |
| Dash number | Dash number | Dash number |
| 8LS | 2LS | C2LS |
| 8RS | 2RS | C2RS |
| None | 2LL | C2LL |
| None | 2RL | C2RL |
| 16LS | 3LS | C3LS |
| 16RS | 3RS | C3RS |
| 16LL | 3LL | C3LL |
| 16RL | 3RL | C3RL |
| 22LS | 5LS | C5LS |
| 22RS | 5RS | C5RS |
| 22LL | 5LL | C5LL |
| 22RL | 5RL | C5RL |
| 32LS | 5LS | C5LS |
| 32RS | 5RS | C5RS |
| 32LL | 5LL | C5LL |
| 32RL | 5RL | C5RL |
| 46LS | 6LS | C6LS |
| 46RS | 6RS | C6RS |
| 46LL | 6LL | C6LL |
| 46RL | 6RL | C6RL |
| 61LL | 8LL | C8LL |
| 61RL | 8RL | C8RL |
| 80LL | 8LL | C8LL |
| 80RL | 8RL | C8RL |
| 125LL | 9LL | C9LL |
| 125RL | 9RL | C9RL |
| 175LL | 10LL | C10LL |
| 175RL | 10RL | C10RL |

Downloaded from http://www.everyspec.com



AMENDMENT ANNOTATIONS: The margins of this specification are marked with vertical lines to indicate where modifications from this amendment were made. This was done as a convenience only and the Government assumes no liability whatsoever for any inaccuracies in these notations. Bidders and contractors are cautioned to evaluate the requirements of this document based on the entire content irrespective of the marginal notations.

Custodians:
Army - AV
Navy - AS
Air Force - 99

Review Activities:
Navy - MC
Air Force - 71

Preparing Activity:
DLA - GS5

(Project 1640-2009-002)

NOTE: The activities listed above were interested in this document as of the date of this document. Since organizations and responsibilities can change, you should verify the currency of the information above using the ASSIST database at http://assist.daps.dla.mil/.