FED. SUP CLASS
4730

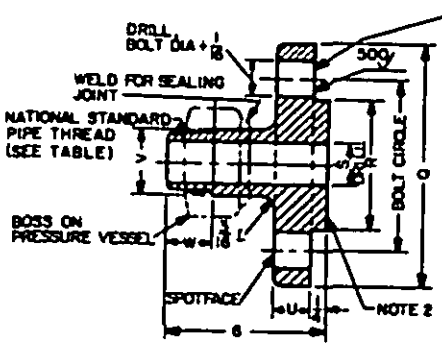

FLANGED NIPPLE

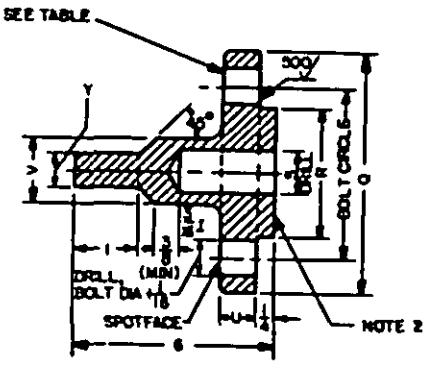

WELDING FLANGED NIPPLE

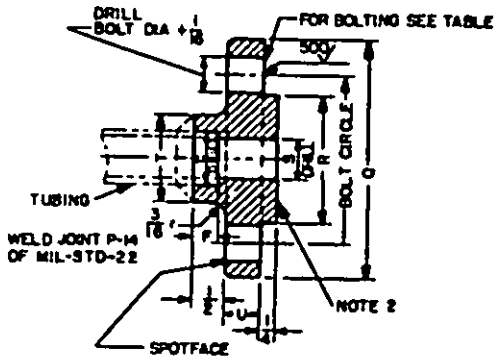

SOCKET WELDING FLANGE

APPROVED 18 June 1976 REVISED

This military standard is approved for use by the Naval Ship Engineering Center, Department of the Navy, and is available for use by all Departments and Agencies of the Department of Defense.

P.A. SH Other Cust	TITLE Alloy steel socket welding flanges and flanged nipples, 1/4 inch and 3/8 inch, 600 pounds per square inch at 850°F (maximum)	MILITARY STANDARD **MS18308(SH)**
Procurement Specification NONE	SUPERSEDES:	SHEET 1 OF 3

DD FORM 1 SEP 67 672N LIMITED COORDINATION PREVIOUS EDITIONS OF THIS FORM ARE OBSOLETE. 4730-N624

This military standard is approved for use by the Naval Ship Engineering Center, Department of the Navy, and is available for use by all Departments and Agencies of the Department of Defense.

Welding Flanges and Flanged Nipples																
Flange									Bolting				Pipe thread			
Nominal pipe size	O dia	R dia	C dia	S dia	T	F min	U	Y	No. of bolts	Bolt dia	Bolt circle	Pitch chord	V dia	Thd size	Thd per inch	W
1/4	3-3/8	1-5/8	0.555	0.364	1	3/8	1/2	0.239	4	1/2	2-1/4	1.59	0.675	3/8	18	0.65
3/8	3-3/4	2	.690	.493	1-3/8	3/8	9/16	.368	4	1/2	2-5/8	1.86	.840	1/2	14	.80

Service rating table			
Service	Size	Gage pressure max lb/in^2	Temperature max °F
All	All	600	850
All	All	750	425
All	All	800	360
All	All	900	100

P.A. SH
Other Cust

PROCUREMENT SPECIFICATION
NONE

SUPERSEDING

TITLE Alloy steel socket welding flanges and flanged nipples, 1/4 inch and 3/8 inch, 600 pounds per square inch at 850°F (maximum)

MILITARY STANDARD

MS18308(SH)

SHEET 2 OF 3

APPROVED 18 June 1976 REVISED

FED. SUP CLASS
4730

DD FORM 672N

FED. SUP CLASS
4730

REQUIREMENTS:

1. Flange material shall be chromium-molybdenum alloy steel, 1-1/4 chromium, 1/2 molybdenum in accordance with ASTM A182, grade F-11 or ASTM A217, grade WC-6.
2. Surface finishes shall be as follows:
   (a) Where indicated by 500 ✓ shall be in accordance with ANSI B46.1.
   (b) Mating surfaces of the flanges shall be either serrated-concentric or serrated-spiral having a roughness not exceeding 500 roughness height rating (RHR) produced by machining not less than 40 cuts of uniform depth per inch of face width.
3. Threads shall be in accordance with Handbook H-28.
4. After machining, flanges shall be cleaned to remove foreign particles. Burrs shall be blended.
5. Each flange shall be identified by casting, electro-chemical etch, vibro tool, or stamping with the following:
   (a) Manufacturer's name or trademark.
   (b) Pressure rating.
   (c) Material.
   (d) Size, ips.
6. Stamping shall be done with round bottom stamps.
7. Cast identification marking is allowed on the flange back provided placement is not subject to removal of the marking during machining.
8. Two flanges of each type and size, selected by the Government representative from the initial run, shall be tested to 1500 lb/in^2 hydrostatic pressure, in the presence of the Government representative. There shall be no leaks or weaknesses develop in the flanges during this test. The test shall be accepted as having established the strength of the flanges.

NOTES:

1. Dimensions are in inches.
2. Tolerances shall be as follows:
   (a) Unless otherwise specified herein, tolerances on fractions shall be ± 1/64 inch, on decimals shall be 0.010 inch.
   (b) Socket and flange bore shall be concentric within a tolerance of ± 0.030 inch.
   (c) The maximum allowable variation in the alinement of the flange bore and the socket bore axis shall be 1/16 inch in 1 foot.
3. Referenced documents shall be of the issue in effect on date of invitation for bids, or request for proposal, except that referenced adopted industry documents shall give the date of the issue adopted.
4. For design feature purposes, this standard takes precedence over procurement documents referenced herein.

APPROVED 18 June 1976 REVISED

This military standard is approved for use by the Naval Ship Engineering Center, Department of the Navy, and is available for use by all Departments and Agencies of the Department of Defense.

P.A. SH Other Cust Procurement Specification No.	TITLE Alloy steel socket welding flanges and flanged nipples, 1/4 inch and 3/8 inch, 600 pounds per square inch at 850°F (maximum) SUPERSEDES	MILITARY STANDARD MS18308(SH) SHEET 2 OF 3

DD FORM 672N

4730-N6