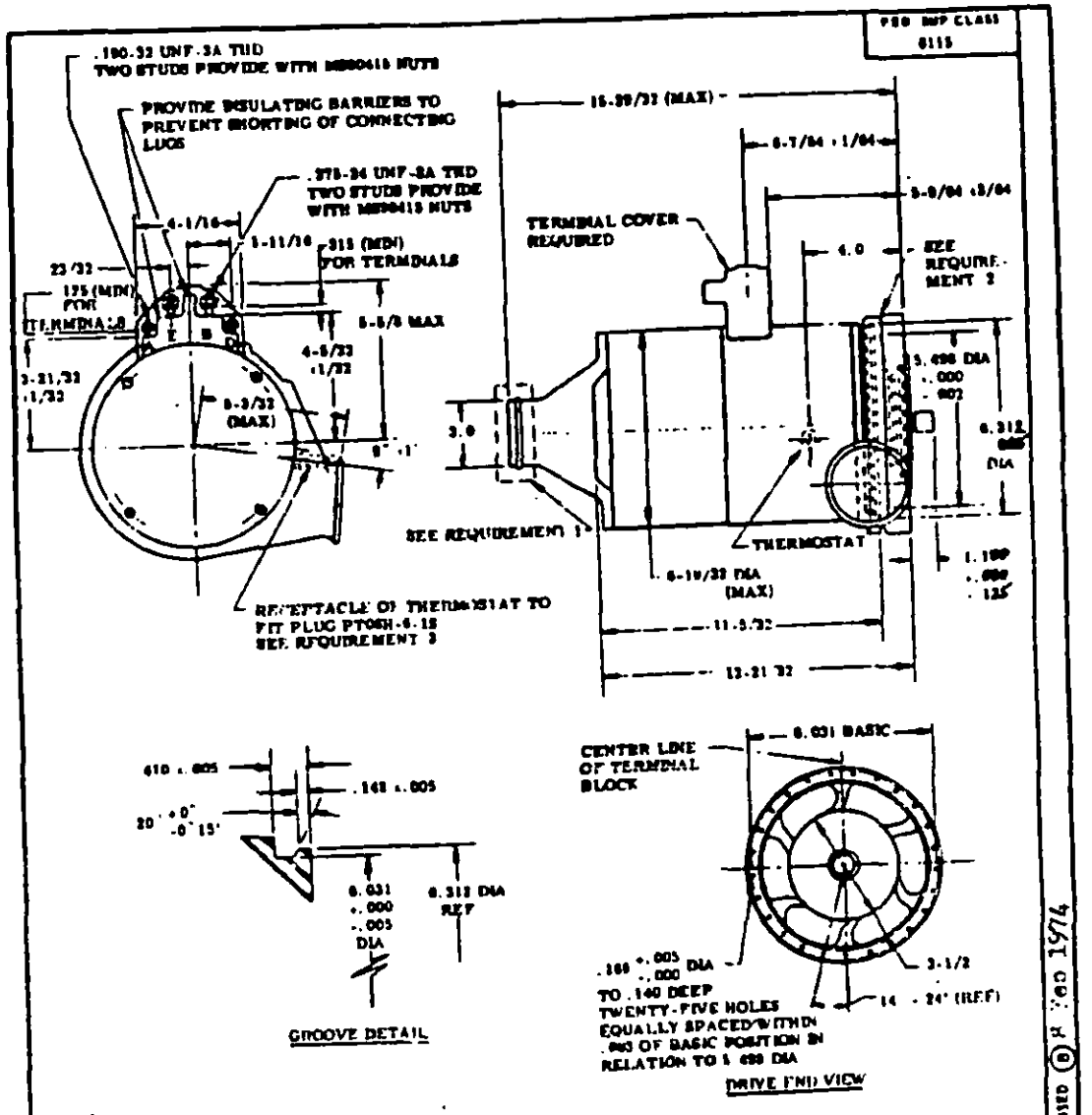

ASSEMBLY	GENERATOR	CONSISTS OF: GAD FLANGE & AIR OUTLET	DIRECTION OF ROTATION VIEWED FROM DRIVE END
MS 18104-1A	MS 18108-1	MS 18108-3	CW
MS 18108-7A	MS 18108-2	MS 18108-3	CW

(B) ENTIRE STANDARD REVISED AND REDRAWN

P.A. Navy - AS Other Cust	TITLE STARTER-GENERATOR, DIRECT CURRENT, 300 AMPERE, 30 VOLT, WIDE SPEED RANGE, CLASS A, TYPE 3	MILITARY STANDARD MS18108(AS)
PROCUREMENT SPECIFICATION MIL-G-6162	SUPERSEDES	SHEET 1 OF 5

DD FORM 672-1 (Limited coordination)

REVISED (B) 1 Dec 1974

APPROVED 19 OCT 64

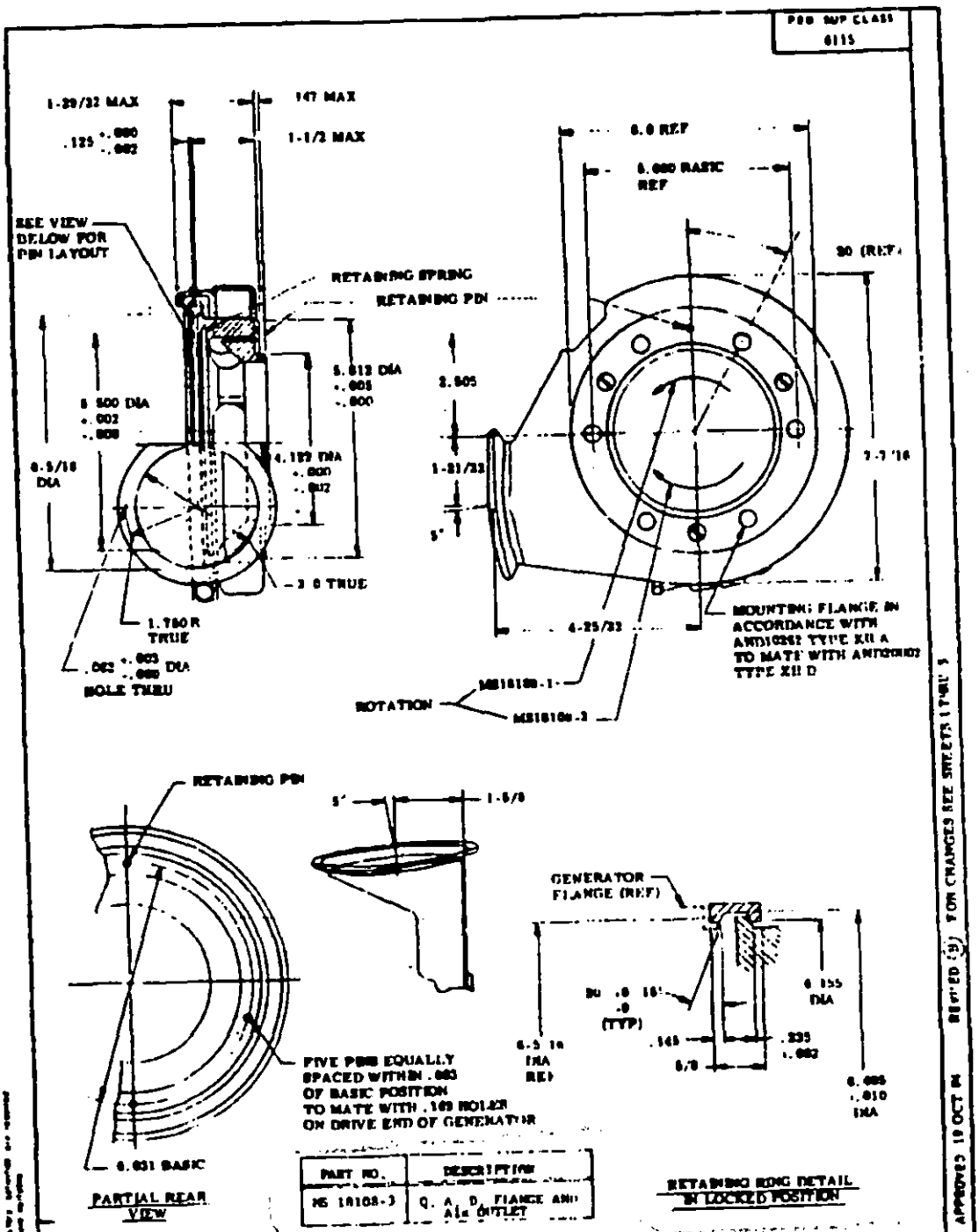

P.A. NAVY - AS Other Cont	TITLE STARTER GENERATOR, DIRECT CURRENT, 300 AMPERE, 30 VOLT, WIDE SPEED RANGE, CLASS A, TYPE 3	MILITARY STANDARD MS18108(AS)
PROCUREMENT SPECIFICATION MIL-G-6162	SUPERSEDES	SHEET 2 OF 5

DD FORM 1 JAN 64 672-1 (SUPERSEDES DD FORM 672 WHICH IS OBSOLETE)

GENERATOR CHARACTERISTICS	
RATED VOLTS	30
RATED CURRENT (NOMINAL AMPS)	800
RATED SPEED (RPM)	3000-8000
MINIMUM SPEED FOR REGULATION (RPM)	2500
MAXIMUM SPEED FOR REGULATION (RPM)	10,000
OVERSPEED (RPM)	11,000
REGULATED FIELD CURRENT (MAXIMUM AMPS)	6
POWER DISSIPATED BY REGULATOR (MAX WATTS)	60
WEIGHT (MAXIMUM POUNDS)	96
MOMENT OF OVERHANG (MAXIMUM INCH-POUNDS)	290
MINIMUM NATURAL FREQUENCY (CPS)	240
BLAST COVER (SEE NOTES)	143
SHEAR (POUNDS PER INCH)	1510, 2[illegible]
EFFICIENCY MINIMUM 70% TO 100% LOAD	70%

REQUIREMENTS:

1. 3" AXIAL SPOUT END PER MS35159
2. O.A.D. FLANGE AND AIR OUTLET PER SHEET 2
3. THERMOSTAT (SETTING 155° C ± 5°C) USED WITH -1 ONLY.
4. THE AIRCRAFT MANUFACTURER SHALL ALLOW CONNECTION LEAD LENGTH FOR THE LIMITING GENERATOR DIMENSIONS SHOWN ON THIS DRAWING.
5. THE AIRCRAFT MANUFACTURER SHALL ALLOW ADEQUATE CLEARANCE FOR INSTALLING AND REMOVING THE GENERATOR.
6. INTERNAL FAN REQUIRED FOR SELFCOOLING.
7. DIMENSIONS IN INCHES. UNLESS OTHERWISE SPECIFIED, TOLERANCES: FRACTIONS ±1/32, DECIMALS ±.030
8. GENERATOR SHALL BE FINISHED IN A COLOR CONFORMING TO MILITARY STANDARD 595 (SAMPLE NO. 17875). THE FINISH SHALL BE UNAFFECTED BY ENVIRONMENTAL CONDITIONS SPECIFIED IN REQ.
9. STARTER PERFORMANCE CRITERIA: STARTING PERFORMANCE CRITERIA IS BASED ON USE OF NAVY 1000 AMPERE, CONSTANT CURRENT ELECTRICAL POWER SYSTEM DESCRIBED IN MILITARY STANDARD MS17784 (WEP) OF FEBRUARY 1963.
10. STARTER CHARACTERISTICS: THE STARTER-GENERATOR WHILE OPERATING AS A STARTER, WITH 1.25 OHMS EXTERNAL RESISTANCE IN SHUNT FIELD CIRCUIT, SHALL BE CAPABLE OF DELIVERING THE FOLLOWING MINIMUM CRANKING TORQUE AT THE INDICATED DRIVE SPEED (RPM) WHEN POWERED BY THE INDICATED INPUT.

INPUT (AMPERES)	INPUT (VOLTS)	DRIVE SPEED (RPM)	DRIVE TORQUE (LB-FT)
1000	-	0	62
1000	-	700	63
-	33	1700	44
-	33	2500	[illegible]
-	20	1500	[illegible]

APPROVED EFFECTIVE AS REVISED FOR HANDS SEE SHEETS 1 THRU 5

P.A. NAVY - AS Other Cont	TITLE STARTER-GENERATOR, DIRECT CURRENT, 800 AMPERE, 30 VOLT, WIDE SPEED RANGE, CLASS A, TYPE I	MILITARY STANDARD MS18108(AS) SHEET 3 OF 3
PROCUREMENT SPECIFICATION MIL-G 6162	(SUPERSEDES)	

DD FORM 672-1 (REVISED SUPERSEDES)

11. ENDURANCE: (STARTER) THE STARTER-GENERATOR SHALL BE CAPABLE OF COMPLETING 1200 CYCLES OF OPERATION WHEN OPERATING AS A STARTER IN ACCORDANCE WITH THE FOLLOWING DUTY CYCLE WITH 1.25 OHMS EXTERNAL RESISTANCE IN SHUNT FIELD CIRCUIT. EXTERNAL COOLING MAY BE USED TO EXPEDITE TESTING AND TO PREVENT EXCESSIVE TEMPERATURE. MAXIMUM TIME BETWEEN CYCLES SHALL BE THREE MINUTES

TABLE I - ENDURANCE TEST - STARTER

FLYWHEEL POLAR MOMENT OF INERTIA LB-FT²	PHASE A ACCELERATION - FROM REST WITHIN TIME INDICATED			PHASE B STEADY STATE OPERATIONS WITH AUXILIARY TORQUE LOAD AS SPECIFIED				PHASE C ACCELERATION - RPM TO WHICH FLYWHEEL SHALL BE ACCELERATED WITHIN TIME INDICATED		
	FINAL RPM	INPUT MAX AMPS	MAX. SEC	MIN RPM	DRIVE TORQUE LB FT	MAX TERM VOLT	TIME SEC	FINAL RPM	TERM VOLT	MAX TIME SEC
91	850	1000	5	850	45 ± 2	24	10	2000	23	15

PHASE A — THIS PHASE SHALL CONSIST OF ACCELERATING THE SPECIFIED FLYWHEEL INERTIA LOAD FROM REST TO THE SPECIFIED SPEED WITHIN THE SPECIFIED TIME AND WITH THE INPUT CURRENT LIMITED TO SPECIFIED VALUE.

PHASE B — THIS PHASE SHALL CONSIST OF A 10 SECOND PERIOD OF STEADY STATE OPERATION AT THE SPECIFIED LOAD AND TERMINAL VOLTAGE.

PHASE C — AFTER COMPLETING PHASE B, THE TORQUE LOAD SHALL BE REMOVED AND THE STARTER PERMITTED TO ACCELERATE THE FLYWHEEL INERTIA LOAD TO THE SPECIFIED SPEED WITHIN THE SPECIFIED TIME.

NOTE: THE ACCELERATION SPECIFIED FOR PHASES A AND C ASSUMES A FRICTIONLESS SYSTEM AND DOES NOT CONSIDER TEST STAND LOSSES SUCH AS WINDAGE OR BEARING FRICTION. ACCORDINGLY, IN ORDER TO ENSURE THAT THE MINIMUM DRIVE SPEED SPECIFIED IN PHASE C IS ATTAINED, AN EXTERNAL ASSIST TORQUE MAY BE SUPPLIED OR THE FLYWHEEL INERTIA LOAD MAY BE REDUCED. IN ADDITION, PHASE C OPERATION MAY BE TERMINATED AT A DRIVE SPEED LESS THAN THE SPECIFIED VALUE PROVIDED THE TOTAL WORK-POWER-RECORD OUTPUT OF THE STARTER IS EQUIVALENT TO THAT WHICH WOULD BE REQUIRED TO ACCELERATE A FRICTIONLESS SYSTEM TO THE SPECIFIED CUT-OFF SPEED.

12. LOW TEMPERATURE: (STARTER) AFTER THE TEMPERATURE OF ALL COMPONENTS OF THE STARTER-GENERATOR HAS BEEN STABILIZED AT -65° F (53.8° C) FOR A MINIMUM OF 6 HOURS, THE STARTER-GENERATOR SHALL BE SUBJECTED TO FOUR CONSECUTIVE ENDURANCE TEST CYCLES AS DESCRIBED IN TABLE I. THE PERFORMANCE DEVELOPED DURING PHASE B OF EACH CYCLE SHALL NOT BE LESS THAN 90 PERCENT OF THE VALUES LISTED IN TABLE I.

13. HIGH TEMPERATURE: (STARTER) REPEAT THE SAME PROCEDURE AS FOR LOW TEMPERATURE EXCEPT THAT THE STABILIZED TEMPERATURE SHALL BE +160° F (71° C). SEPARATION OF STARTER AND GENERATOR TESTS IS NECESSARY SINCE AN EXTREMELY SOPHISTICATED TEST STAND WOULD BE REQUIRED TO PERMIT STARTING AND GENERATING OPERATION IN QUICK SUCCESSION. PERFORMANCE LOSS SHALL NOT EXCEED THAT ALLOWED IN THE LOW TEMPERATURE TEST.

14. CONSECUTIVE CYCLE: (STARTER) THE STARTER-GENERATOR SHALL BE CAPABLE OF PERFORMING FIVE CYCLES OF OPERATION AT 30 SECONDS INTERVALS. EACH CYCLE SHALL BE IN ACCORDANCE WITH DUTY CYCLE LISTED IN TABLE I. NO EXTERNAL COOLING SHALL BE PROVIDED DURING THIS TEST.

15. BRUSH MARKING: EACH BRUSH SHALL HAVE A DIAGONAL GROOVE IN THE ANTI-DRIVE SIDE, EXTENDING FROM THE BRUSH FACE TO A POINT AT THE BRUSH BACK OR FRONT, WHICH INDICATES 100 PERCENT OF ALLOWABLE WEAR.

APPROVED 19 OCT 64 REVISED (B) FOR CHANGES SEE SHEETS 1 THRU 5

P.A. NAVY - AS Other Cust	TITLE STARTER-GENERATOR, DIRECT CURRENT, 300 AMPERE, 30 VOLT, WIDE SPEED RANGE, CLASS A, TYPE 3	MILITARY STANDARD MS18108(AS)
PROCUREMENT SPECIFICATION MIL-G-6162	SUPERSEDES	SHEET 4 OF 5

DD FORM 1 JAN 61 672-1 (REVISED FOR PRINTING)

16 TERMINALS. THE INTERNAL WIRING OF THE STARTER-GENERATOR SHALL TERMINATE IN STAINLESS STEEL TERMINAL STUDS IN A TERMINAL BLOCK PROPERLY MARKED FOR EASY IDENTIFICATION. SUITABLE MS90413 NUTS SHALL BE PROVIDED WITH EACH TERMINAL STUD. INSULATING BARRIERS SHALL BE PROVIDED BETWEEN ADJACENT TERMINALS.

17 PROTECTIVE COVER. A PROTECTIVE COVER OF A FLEXIBLE FIRE RESISTANT AND AIRCRAFT FLUID RESISTANT MATERIAL SHALL BE PROVIDED FOR THE TERMINAL BLOCK. PROVISIONS SHALL BE MADE TO PERMIT INSERTING WIRES FROM THE TERMINAL BLOCK IN EITHER DIRECTION.

18. OVER-TEMPERATURE. A THERMALLY OPERATED OVER-TEMPERATURE INDICATING SWITCH SHALL BE PROVIDED WITH THE MINIMUM. THE THERMOSTAT SETTING SHALL BE 185 ± 3 C. THE DEVICE SHALL BE PROVIDED WITH A CONNECTOR.

19 BEARINGS. THE ARMATURE OF THE STARTER-GENERATOR SHALL BE SUPPORTED ON BOTH ENDS BY SEALED BEARINGS. THE BEARING SUPPORT ON THE DRIVE SHAFT END SHALL BE VENTED SO AS TO EQUALIZE PRESSURE ON BOTH SIDES OF THE BEARING. THE STARTER-GENERATOR HOUSING SHALL REMAIN INTACT IN THE EVENT OF PARTIAL OR TOTAL BEARING FAILURE.

20 HEATING. THE ABILITY OF THE GENERATOR TO DELIVER 100 AMPERES, 30 VOLT AT 9000 RPM, 300 AMPERES, 30 VOLT AT 3000 RPM AND 250 AMPERES AT 3000 RPM WITH 1.25 OHMS IN EXTERNAL FIELD CIRCUIT AT 40 DEGREE CENTIGRADE AIR IN AND 6.0 INCH H_2O AIR PRESSURE CONTINUOUSLY WITHOUT OVERHEATING SHALL BE DEMONSTRATED.

21 OVERLOAD CAPACITY. THE GENERATOR SHALL BE CAPABLE OF DELIVERING 200 PERCENT OF RATED CAPACITY FOR 5 SECONDS AND 150 PERCENT OF RATED CAPACITY FOR 2 MINUTES AT 6000 RPM.

22. EQUALIZING VOLTAGE: THE EQUALIZING VOLTAGE, UPON TEMPERATURE STABILIZATION, SHALL BE 2.1 ± 0.1 VOLTS MEASURED BETWEEN D AND E TERMINALS.

APPROVED 19 OCT 64 REVISED (B). FOR CHANGES SEE SHEETS 1 THRU 5

P.A. NAVY - AS Other Cust	TITLE STARTER-GENERATOR DIRECT CURRENT, 300 AMPERE, 30 VOLT, WIDE SPEED RANGE, CLASS A, TYPE 3	MILITARY STANDARD MS18108(AS)
PROCUREMENT SPECIFICATION MIL-G 6162	APPROVED	SHEET 5 OF 5

DD FORM 672-1 (Revised Jan 1961)