Downloaded from http://www.everyspec.com

FED. SUP CLASS
6240

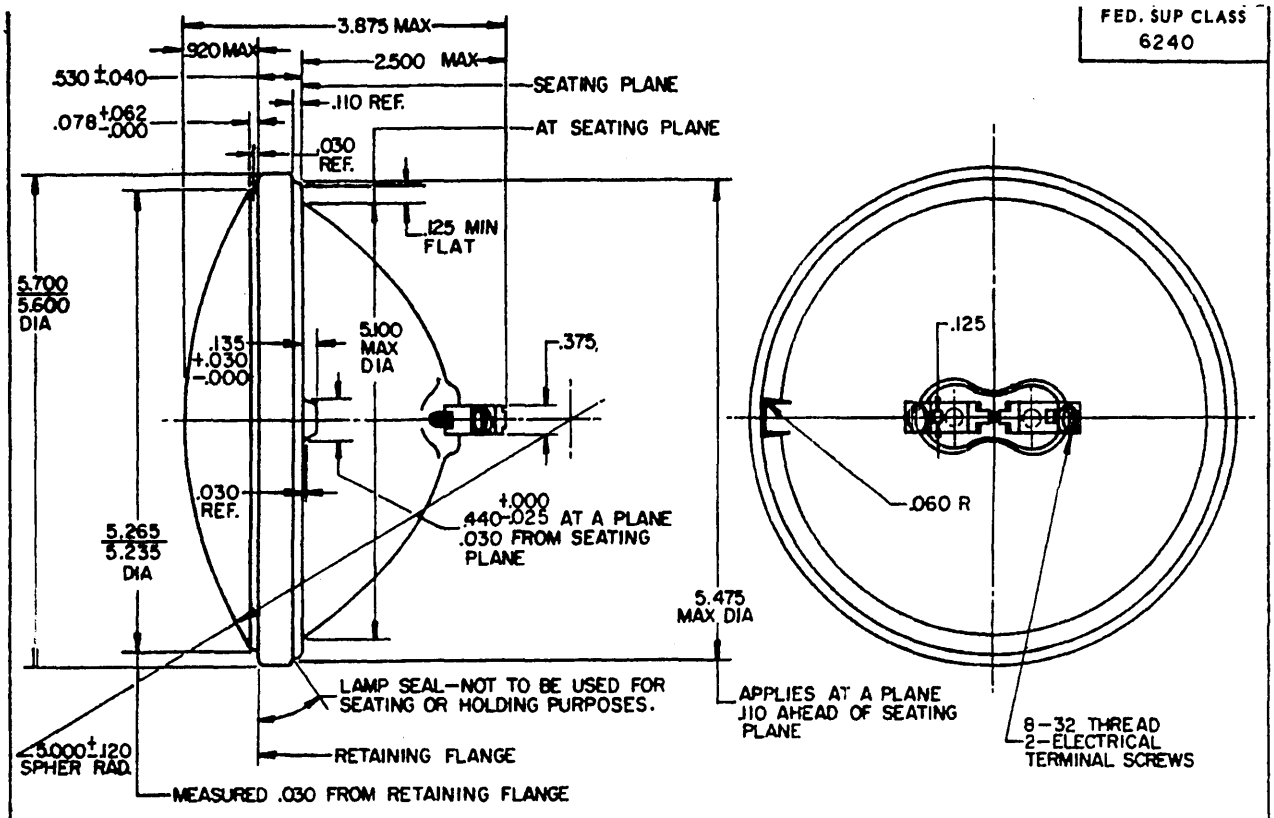

PHOTOMETRIC TEST POINTS
SEE TABLE I FOR TEST POINT VALUES

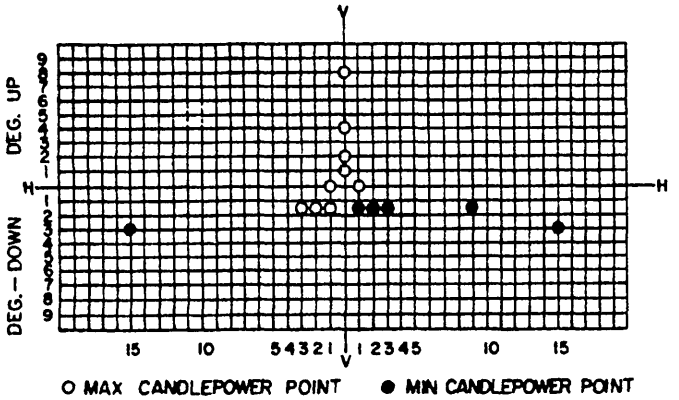

O MAX CANDLEPOWER POINT ● MIN CANDLEPOWER POINT

TABLE I
PHOTOMETRIC TEST POINT VALUES
MEASURED 60 FEET FROM LAMP

POSITION, DEG.	MAX C.P.	MIN C.P.
LINES 8U TO 90U	75	—
LINE — 4U	125	—
LINE — 2U	200	—
LINE — 1U	300	—
H-1L TO LEFT	500	—
H-1R TO RIGHT	1000	—
1-1/2D — 1L TO 3L	8000	—
1-1/2D — 1R TO 3R	—	2000
1-1/2D — 3R TO 9R	—	1000
3D — 15L TO 15R	—	1000

MS PART NO.	FORMER PART NO.	RATED VOLTS	RATED WATTS	DESIGN VOLTS	DESIGN AMPS	FILAMENT TYPE	RATED AVG. LAB LIFE	DESCRIPTION
MS 18004 —4012	ORD 193157	6	35	6.2	5.65	C—6	300 HRS	CLEAR GLASS LENS, PRISMATIC-FILAMENT SHIELD
MS 18004—4012A	ORD 193158	6	35	6.2	5.65	C—6	300 HRS	AMBER GLASS LENS, PRISMATIC-FILAMENT SHIELD

NOTES:

1. TYPE III (AUTOMOTIVE) OF PROCUREMENT SPECIFICATION.
2. LAMPS SHALL BE IN ACCORDANCE WITH SAE STANDARD ON FOG LAMPS, SAE J 583.
3. MS DASH NUMBERS CORRELATE WITH LAMP INDUSTRY TRADE NUMBERS.
4. UNLESS OTHERWISE SPECIFIED DIMENSIONS ARE IN INCHES. TOLERANCES, ± .010 ON DECIMALS.
5. MARKING SHALL CONSIST OF THE MS DASH NUMBER, VOLTAGE RATING AND MANUFACTURER'S IDENTIFICATION IN ACCORDANCE WITH MIL-STD-130.
6. THIS STANDARD IS NOT INTENDED TO LIMIT CONSTRUCTION TO FEATURES OTHER THAN AS SHOWN HEREON BY DIMENSIONS, NOTATIONS AND REFERENCED DOCUMENTS.
7. FOR DESIGN FEATURE PURPOSES THIS STANDARD TAKES PRECEDENCE OVER PROCUREMENT DOCUMENTS REFERENCED HEREIN.

APPROVED 23 NOVEMBER 1962 REVISED

P.A. MO Other Cust Navy—Ships AF—ASD	TITLE LAMP, INCANDESCENT — SEALED BEAM, PAR 46 FOG LAMP, 2 SCREW TERMINAL TYPE	MILITARY STANDARD MS 18004
PROCUREMENT SPECIFICATION W-L-50	SUPERSEDES: DLAX 3.1 (IN PART)	SHEET 1 OF 1

This military standard is approved by the Department of Defense and is mandatory on all activities. Selection for all new engineering and design applications and for repetitive use shall be made from this document.

NOTICE.—When Government drawings, specifications, or other data are used for any purpose other than in connection with a definitely related Government procurement operation, the United States Government thereby incurs no responsibility, nor any obligation whatsoever; and the fact that the Government may have formulated, furnished, or in any way supplied the said drawings, specifications, or other data is not to be regarded by implication or otherwise as in any manner licensing the holder or any other person or corporation, or conveying any rights or permission to manufacture, use, or sell any patented invention that may in any way be related thereto.