Downloaded from http://www.everyspec.com

FED. SUP CLASS
6685

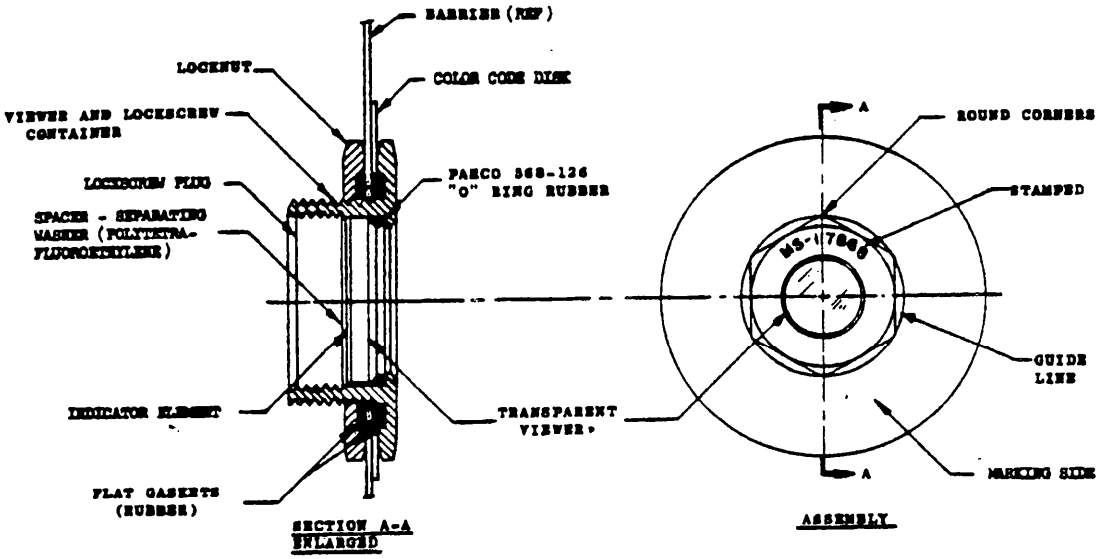

SECTION A-A ENLARGED

ASSEMBLY

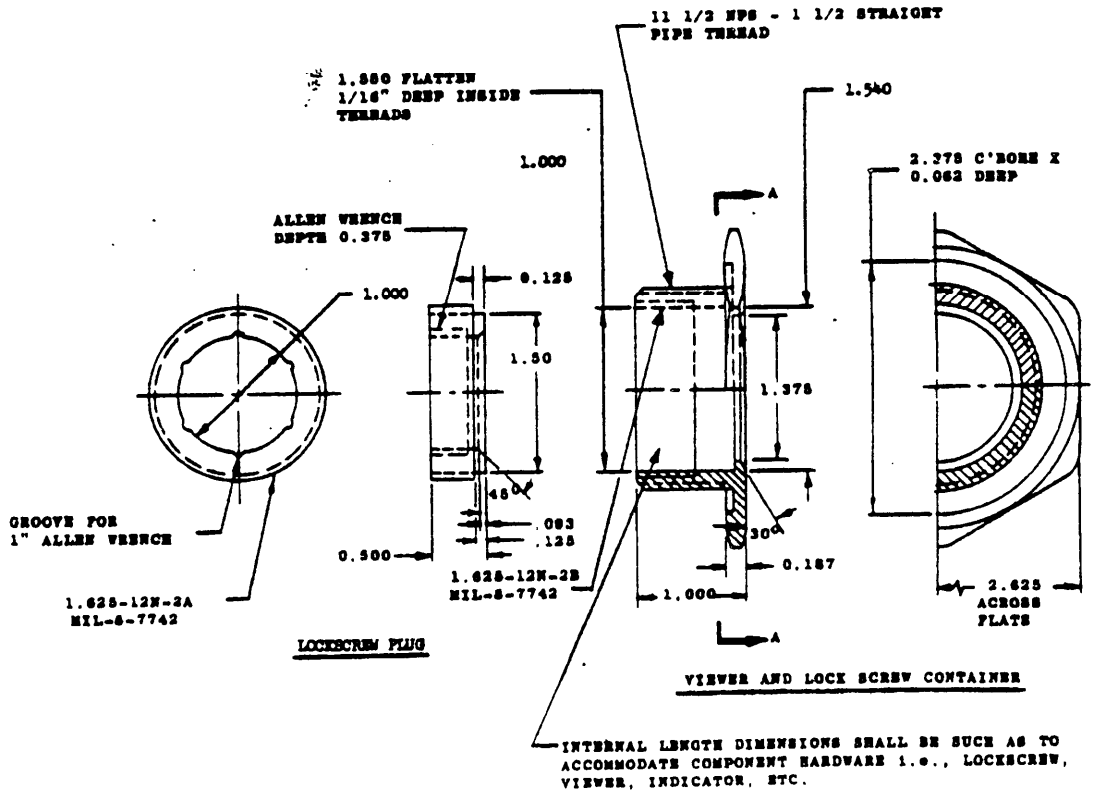

LOCKSCREW PLUG

VIEWER AND LOCK SCREW CONTAINER

INTERNAL LENGTH DIMENSIONS SHALL BE SUCH AS TO ACCOMMODATE COMPONENT HARDWARE i.e., LOCKSCREW, VIEWER, INDICATOR, ETC.

(A) REVISED AND REDRAWN

APPROVED 6 July 1962 REVISED (A) 9 June 1964

This standard has been approved by the BUREAU OF NAVAL WEAPONS Department of the NAVY and is mandatory for use by that activity. All other military activities are required to employ this standard when suitable.

P.A. NAVY-Weps Other Cust	TITLE INDICATOR, PROPELLANT LEAK, PLUG, COLOR CHANGE, FOR UNSYMMETRICAL DIMETHYLHYDRAZINE AND FUMING NITRIC ACID.	MILITARY STANDARD MS17868(Weps)
PROCUREMENT SPECIFICATION NONE	SUPERSEDES:	SHEET 1 OF 3

DD FORM 1 SEP 57 672-1 (Limited coordination)

PREVIOUS EDITIONS OF THIS FORM ARE OBSOLETE.

Downloaded from http://www.everyspec.com

FED. SUP CLASS
6685

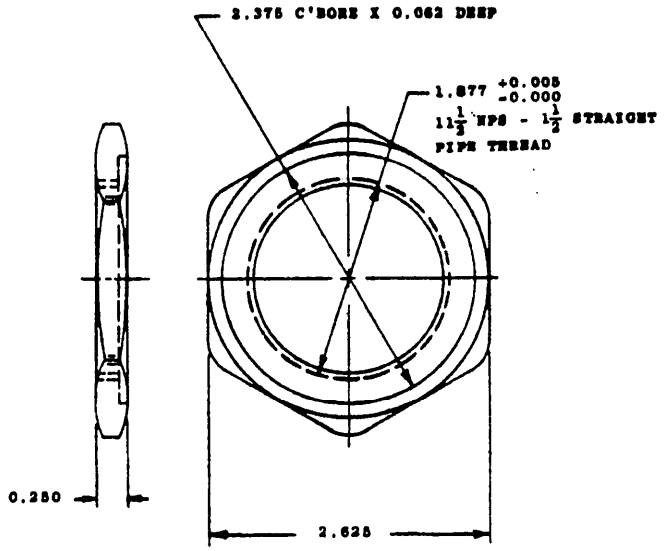

LOCKNUT

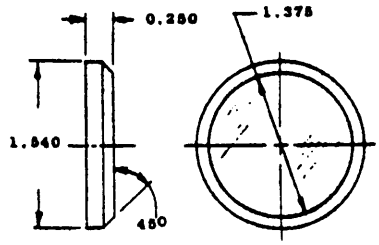

TRANSPARENT VIEWER

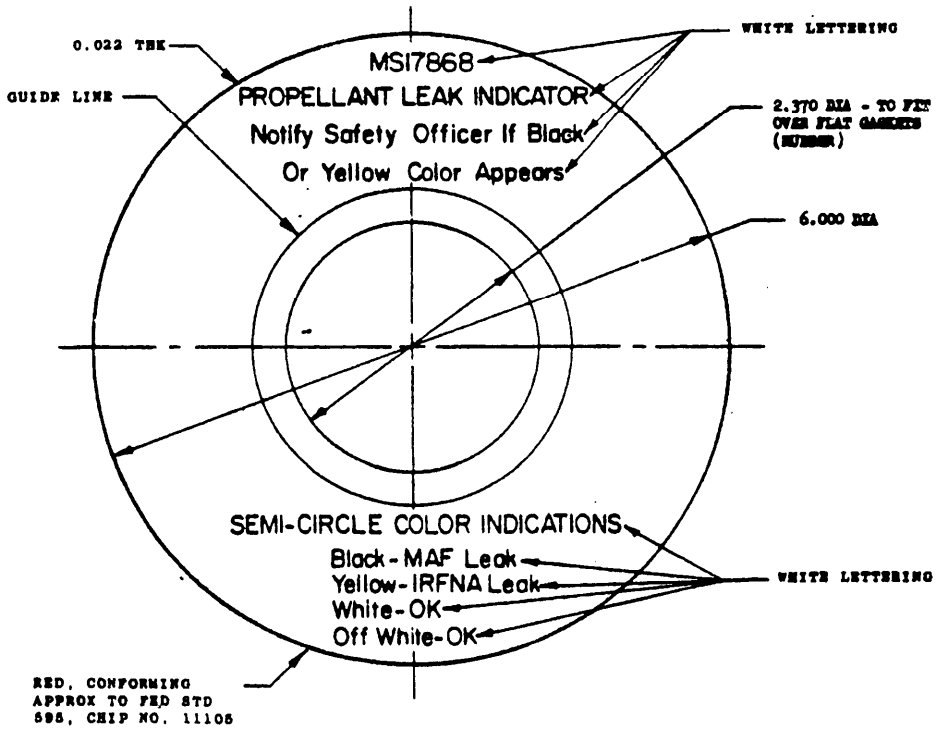

COLOR CODE DISK

APPROVED 6 July 1962 REVISED (A) 9 June 1964

This standard has been approved by the BUREAU OF NAVAL WEAPONS Department of the NAVY and is mandatory for use by the activity. All other military activities are required to employ this standard where suitable.

P.A. NAVY - Weps Other Cust	TITLE INDICATOR, PROPELLANT LEAK, PLUG, COLOR CHANGE, FOR UNSYMMETRICAL DIMETHYLHYDRAZINE AND FUMING NITRIC ACID.	MILITARY STANDARD MS17868(Weps)
PROCUREMENT SPECIFICATION NONE	SUPERSEDES:	SHEET 2 of 3

DD FORM 1 SEP 57 672-1 (Limited coordination)

PREVIOUS EDITIONS OF THIS FORM ARE OBSOLETE.

Downloaded from http://www.everyspec.com

FED. SUP CLASS
6685

NOTES:

1. MATERIAL: PLUGS, ALUMINUM ALLOY 6061, SPECIFICATION QQ-A-325.
INDICATING ELEMENT, BLOTTING PAPER, SPECIFICATION UU-P-63, GRADE B, .185 ±.0035 THICK. COLOR OF THE BLOTTING PAPER SHALL BE WHITE.
GASKETS, RUBBER, SPECIFICATION MIL-R-6855, CLASS II, GRADE 60.
SEPARATING WASHER (1.50 OD AND 1.25 ID, LOCATED BETWEEN THE PLUG AND INDICATING ELEMENT SHALL BE POLYTETRAFLUOROETHYLENE.
VIEWING SURFACE, CLEAR TRANSPARENT GLASS
COLOR CODE DISK, RED WEATHER RESISTANT PLASTIC, 20 ±3 MILS THICK. LETTERING ON THE COLOR CODE DISK SHALL BE 1/8 INCH HIGH AND SHALL BE PRINTED DIRECTLY ON THE DISK OR ON LABELS WHICH SHALL BE WATERPROOF AND WEATHER-PROOF. LETTERING SHALL NOT BE OBLITERATED BY NORMAL HANDLING OR IMMERSION IN WATER AND SHALL NOT FADE UPON EXPOSURE TO DIRECT SUNLIGHT.

2. FINISH: THE INDICATING ELEMENT SHALL CONSIST OF TWO SEMICIRCLES, ONE OF WHICH SHALL BE IMPREGNATED WITH ENOUGH N-PHENYLANTHRANILIC ACID TO TURN BRIGHT YELLOW WHEN EXPOSED TO FUMING NITRIC ACID. THE SECOND SHALL BE IMPREGNATED WITH ENOUGH MERCUROUS CHLORIDE TO TURN BLACK WHEN EXPOSED TO MAF-1 FUMES. THE INDICATING PAPER CONTAINING N-PHENYLANTHRANILIC ACID SHALL BE PREPARED BY DIPPING THE PAPER IN A SOLUTION OF 0.2% OR MORE BY WEIGHT OF N-PHENYLANTHRANILIC ACID IN METHYL ALCOHOL. THE INDICATING PAPER CONTAINING MERCUROUS CHLORIDE SHALL BE PREPARED BY ADDING SEVERAL DROPS OF A MIXTURE, CONTAINING 15% BY WEIGHT OF MERCUROUS CHLORIDE AND 1% BY WEIGHT OF CARBOXYMETHYLCELLULOSE IN WATER, TO THE PAPER.

3. INTERPRET DRAWING IN ACCORDANCE WITH STANDARDS PRESCRIBED BY SPECIFICATION MIL-D-70327.

4. THIS STANDARD TAKES PRECEDENCE OVER PROCUREMENT DOCUMENTS REFERENCED HEREIN.

5. REFERENCED DOCUMENTS SHALL BE OF THE ISSUE IN EFFECT ON DATE OF INVITATIONS FOR BID.

6. PREPARATION FOR DELIVERY: PLUGS SHALL BE INDIVIDUALLY SEALED IN TRANSPARENT BAGS CONFORMING TO SPECIFICATION MIL-B-22205, TYPE III, AND SNUGLY PACKAGED, TO PRECLUDE MOVEMENT OF THE ITEM, IN CARS CONFORMING TO SPECIFICATION PPP-C-96, TYPE V, CLASS 2. PACKING METHOD SHALL BE AS SPECIFIED IN THE APPENDIX OF SPECIFICATION PPP-C-96.

7. A GUIDE LINE SHALL BE USED TO CENTER THE DISK AT ASSEMBLY.

8. DIMENSIONS IN INCHES. UNLESS OTHERWISE SPECIFIED, TOLERANCES: DECIMALS ±.005 ANGLES ±1/2°.

APPROVED 6 JULY 1962 REVISED (A) 9 June 1964

P.A. NAVY-Wepe Other Cust	TITLE INDICATOR, PROPELLANT LEAK, PLUG, COLOR CHARGE, FOR UNSYMMETRICAL DIMETHYLHYDRAZINE AND FUMING NITRIC ACID	MILITARY STANDARD MS17868(Weps)
PROCUREMENT SPECIFICATION NONE	SUPERSEDES:	SHEET 3 OF 3

DD FORM 1 SEP 61 672-1 (Limited coordination) PREVIOUS EDITIONS OF THIS FORM ARE OBSOLETE

This standard has been approved by the BUREAU OF NAVAL WEAPONS Department of the NAVY and is mandatory for use by that activity. All other military activities are required to employ this standard where suitable.