Downloaded from http://www.everyspec.com

FED. SUP CLASS
6240

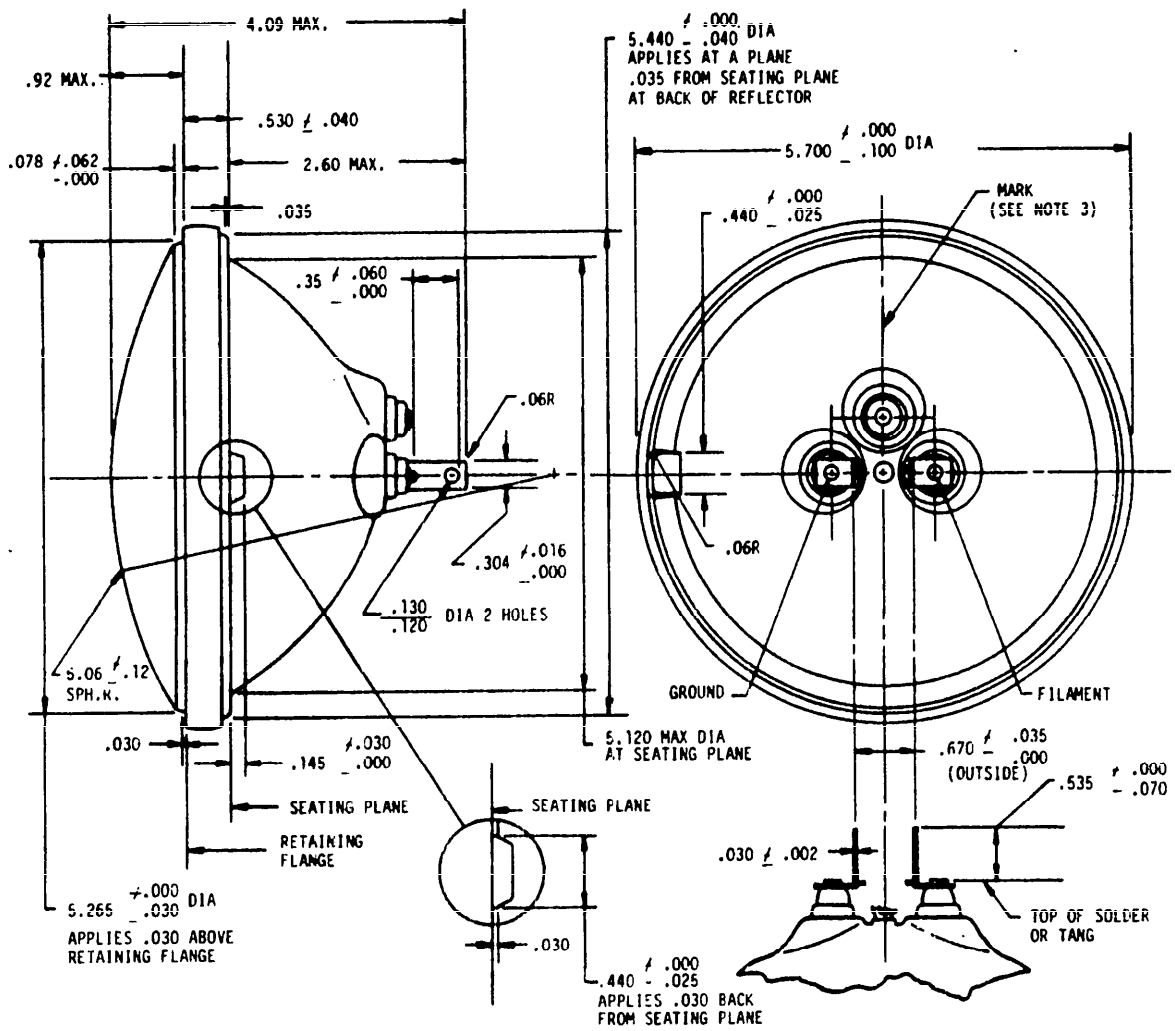

NOTE: INTERSECTION OF VERTICAL AND HORIZONTAL CENTERLINES THROUGH CONTACTS MUST FALL WITHIN .25 OF AXIS OF LAMP.

MS PART NO.	DESIGN		MAX. AMPS	INITIAL MAX. CP (APPROX.)	FIL. CONST.	BEAM SPREAD IN DEGREES (APPROX.)		HOURS LIFE (APPROX.)
	VOLTS	WATTS				HOR.	VERT.	
MS 17163-4478	13	60	4.9	1,600	2C-6 IN SERIES	55	30	800 AT 14V

NOTES:

1. ALL DIMENSIONS IN INCHES.
2. THE MS PART NUMBER CONSISTS OF THE MS NUMBER FOLLOWED BY A DASH NUMBER WHICH IS THE INDUSTRY TRADE NUMBER.
3. THE MS DASH NUMBER AND VOLTAGE SHALL BE PERMANENTLY MARKED ON REAR SURFACE OF LAMP.
4. THE TYPE OF SERVICE (FLOODLAMP) SHALL BE PERMANENTLY MARKED ON LENS.
5. (B) THE LAMP SHALL BE OF THE ALL-GLASS SEALED BEAM TYPE AND SHALL CONFORM TO S.A.E. J598 FOR SEALED LIGHTING UNIT FOR CONSTRUCTION AND INDUSTRIAL MACHINERY.
6. REFERENCED DOCUMENTS SHALL BE OF THE ISSUE IN EFFECT ON DATE OF INVITATION FOR BIDS.

APPROVED 20 JUNE 1960 REVISED (A) 31 JANUARY 1973 (B) 5 MARCH 1984

REVIEW ACTIVITIES : 82
USER ACTIVITIES : YD, MC

This military standard is approved for use by all Departments and Agencies of the Department of Defense. Selection for all new engineering and design applications and for repetitive use shall be made from this document.

P. A. ME	INTERNATIONAL INTEREST	TITLE	MILITARY STANDARD
Other Cust AS 99		LAMP, INCANDESCENT, PAR-46 12 VOLT FLOODLAMP 2 CONTACT LUGS	MS 17163
PROCUREMENT SPECIFICATION NONE	SUPERSEDES:		SHEET 1 OF 1

DD FORM 1 MAY 73 672-1 (COORDINATED)

PROJECT 6240-0342