INCH-POUND

MS16994F
27 June 2011
SUPERSEDING
MS16994E
5 February 2004

DETAIL SPECIFICATION SHEET

NUT, PLAIN, KNURLED

Reactivate after 5 February 2004 and may be used for new and existing designs and acquisitions.

This specification is approved for use by all Departments and Agencies of the Department of Defense.

The requirements for acquiring the product described herein shall consist of this specification sheet and FF-N-836.

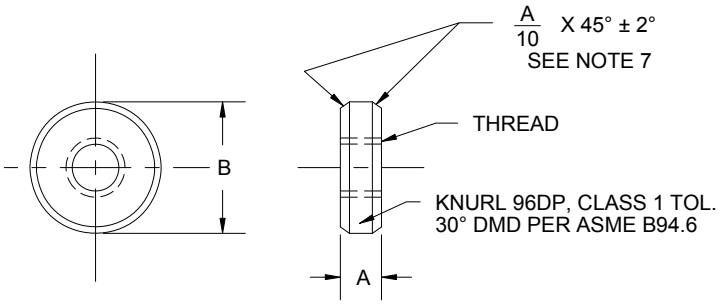

FIGURE 1. NUT.

TABLE I. DASH NUMBERS AND DIMENSIONS.

DASH NO.				THREAD	A	∅B
BRASS	CRES	CARBON STEEL	AL ALLOY			
1B*	1C*	1S*	1A*		.06	.56
2B*	2C	2S	2A		.09	.88
3B*	3C*	3S*	3A*	(N0. 4)	.12	.38
4B*	4C*	4S*	4A*	.112	.22	.31
5B	5C	5S	5A	40UNC-2B	.25	.38
6B	6C	6S	6A		.50	.38
7B*	7C*	7S*	7A*		.56	.38
8B*	8C*	8S*	8A*		.12	.50
9B*	9C*	9S*	9A*		.16	.56
10B	10C	10S	10A		.19	.50
11B*	11C*	11S*	11A*	(NO. 6)	.22	.33
12B	12C	12S	12A	.164	.25	.38
				32UNC-2B		
13B*	13C*	13S*	13A		.28	.41
14B*	14C*	14S*	14A*		.30	.62
15B	15C	15S	15A		.34	.50
16B*	16C*	16S*	16A*		.35	.62
17B	17C	17S	17A		.94	.88
18B*	18C*	18S*	18A*		.16	.50
19B	19C	19S	19A		.19	.50
20B*	20C*	20S*	20A*		.22	.44
21B	21C	21S	21A		.25	.75
22B	22C	22S	22A		.28	.50
				(NO. 8)		
23B*	23C*	23S*	23A*	.164	.31	.44
24B*	24C*	24S*	24A*	32UNC-2B	.34	.41
25B	25C	25S	25A		.38	.68
26B*	26C*	26S*	26A*		.41	.50
27B	27C	27S	27A		.47	.38
28B	28C	28S	28A		.50	.50
29B*	29C*	29S*	29A*		.56	.50
30B	30C	30S	30A		.62	.75

* INACTIVE FOR DESIGN AFTER 27 FEB 1976

TABLE I. DASH NUMBERS AND DIMENSIONS. (Continued)

DASH NO.				THREAD	A	∅B
BRASS	CRES	CARBON STEEL	AL ALLOY			
31B*	31C*	31S*	31A*		.18	.88
32B*	32C*	32S*	32A*		.19	.75
33B	33C	33S	33A		.25	1.00
34B*	34C*	34S*	34A*		.28	.75
35B	35C	35S	35A		.31	.50
				(NO. 10)		
36B	36C	36S	36A	.190	.33	.52
37B*	37C*	37S*	37A*	32UNF-2B	.38	.50
38B*	38C*	38S*	38A*		.41	.50
39B*	39C*	39S*	39A*		.44	.62
40B	40C	40S	40A		.50	.50
41B	41C	41S	41A		.56	.76
42B*	42C*	42S*	42A*		.12	.75
43B	43C	43S	43A		.23	.50
44B	44C	44S	44A		.25	.75
45B*	45C*	45S*	45A*	(NO. 10)	.31	.75
46B*	46C*	46S*	46A*	.190	.33	.50
				24UNC-2B		
47B*	47C*	47S*	47A*		.38	.75
48B	48C	48S	48A		.44	.75
49B	49C	49S	49A		.69	1.00
50B	50C	50S	50A		.12	.88
51B*	51C*	51S*	51A*		.25	1.00
52B	52C	52S	52A	(1/4)	.38	1.00
53B*	53C*	53S*	53A*	.25	.41	.62
54B	54C	54S	54A	28UNF-2B	.50	.50
55B	55C	55S	55A		.55	1.25
56B*	56C*	56S*	56A*		.56	.62
57B*	57C*	57S*	57A*		.12	.56
58B	58C	58S	58A		.19	.62
59B	59C	59S	59A		.25	.75
60B*	60C*	60S*	60A*	(1/4)	.38	.69
61B	61C	61S	61A	.25	.50	.75
				28UNF-2B		
62B	62C	62S	62A		.56	1.50
63B	63C	63S	63A		.65	.88
64B*	64C*	64S*	64A*		.69	.56
65B*	65C*	65S*	65A*		.75	1.50
66B	66C	66S	66A	(5/16)	.25	.88
67B	67C	67S	67A	.3125	.38	1.25
68B*	68C*	68S*	68A*	18UNC-2B	.38	.62
69B	69C	69S	69A		.56	.88
70B*	70C*	70S*	70A*		.12	.88
71B	71C	71S	71A		.25	.88
72B	72C	72S	72A	(5/16)	.31	1.00
73B*	73C*	73S*	73A*	.3125	.38	.44
74B*	74C*	74S*	74A*	24UNF-2B	.44	.56
75B	75C	75S	75A		.50	.75
76B*	76C*	76S*	76A*		.88	.75
77B	77C	77S	77A		.94	1.25
78B*	78C*	78S*	78A*		.09	.84
79B	79C	79S	79A		.12	.50
80B*	80C*	80S*	80A*		.12	.62
81B	81C	81S	81A		.16	.94
82B*	82C*	82S*	82A*	(3/8)	.19	.52
				.375		
83B	83C*	83S	83A	32UNEF-2B	.25	.69
84B	84C	84S	84A		.31	1.00
85B*	85C*	85S*	85A*		.38	.69
86B	86C	86S	86A		.75	.75
87B*	87C*	87S*	87A*		.88	.62

* INACTIVE FOR DESIGN AFTER 27 FEB 1976

TABLE I. DASH NUMBERS AND DIMENSIONS. (Continued)

DASH NO.				THREAD	A	∅B
BRASS	CRES	CARBON STEEL	AL ALLOY			
88B*	88C*	88S*	88A*		.09	.69
89B	89C	89S	89A		.12	.69
90B*	90C*	90S*	90A*		.19	.62
91B*	91C*	91S*	91A*	(3/8)	.22	.55
92B	92C	92S	92A	.375	.25	1.25
				24UNF-2B		
93B*	93C*	93S*	93A*		.38	.88
94B	94C	94S	94A		.50	.75
95B*	95C*	95S*	95A*		.77	.77
				(3/8)		
--	122C	--	--	.375	.50	1.25
				16UNC-2B		
96B*	96C*	96S*	96A*		.09	1.19
97B*	97C*	97S*	97A*		.12	1.00
98B*	98C*	98S*	98A*		.16	1.50
99B*	99C*	99S*	99A*	(7/16)	.31	.88
100B*	100C*	100S*	100A*	*.4375	.44	.88
				20UNF-2B		
101B*	101C*	101S*	101A*		.47	1.00
102B*	102C*	102S*	102A*		.75	1.50
103B*	103C*	103S*	103A*		.88	1.00
104B*	104C*	104S*	104A*		.09	1.00
105B	105C	105S	105A		.12	1.12
106B*	106C*	106S*	106A*		.19	1.75
107B	107C	107S	107A		.25	.75
108B	108C	108S	108A	(1/2)	.38	1.00
				.50		
109B*	109C*	109S*	109A*	20UNF-2B	.44	1.62
110B	110C	110S	110A		.47	1.50
111B*	111C*	111S*	111A*		.56	.97
112B	112C	112S	112A		.75	1.50
113B	113C	113S	113A		.88	2.50
114B	114C	114S	114A		1.25	1.25
115B*	115C*	115S*	115A*		.08	1.75
116B	116C	116S	116A		.12	1.72
117B*	117C*	117S*	117A*	(3/4)	.25	1.91
118B*	118C*	118S*	118A*	.75	.31	1.06
119B	119C	119S	119A	20UNEF-2B	.39	1.25
120B	120C	120S	120A		.44	1.88
121B	121C	121S	121A		.75	1.50

* INACTIVE FOR DESIGN AFTER 27 FEB 1976

REQUIREMENTS:

1. MATERIALS: Brass – Copper alloy 230, 240, 260, 268 per ASTM B36/B36M, H02 or alloy 342, 353 per ASTM B121/B121M, H02 or alloy 360 per ASTM B16/B16M, H02.
   Corrosion resisting steel (CRES) – 300 series per SAE-AIR4127.
   Carbon steel – AISI 1010 to 1020 per SAE-AIR4127.
   Aluminum alloy – 2024, temper T4, in accordance with SAE-AMS-QQ-A-225/6.

2. FINISH: Brass – Black chemical per MIL-F-495.
   CRES – Passivate in accordance with SAE-AMS2700.
   Steel - Cadmium plate, type II, class 3, in accordance with SAE-AMS-QQ-P-416.
   Aluminum alloy – Anodic coating in accordance with MIL-A-8625.

3. MAGNETIC PERMEABILITY: CRES fasteners shall have a magnetic permeability of 2.0 maximum (AIR=1.0) for a Field strength of H=200 Oersteds using magnetic indicator per ASTM A342/A342M.

4. THREADS: The threads shall be in accordance with FED-STD-H28/2.

5. DIMENSIONS: All dimensions are in inches unless otherwise specified.

6. TOLERANCE: XX ±.01.

7. Where A/10 is less than .025, chamfer by breaking sharp edges only.

8. PART NUMBER: The part number consists of the MS number plus the dash number from Table I.

   EXAMPLE: MS16994-1B

9. For design feature purposes, this standard takes precedence over procurement document referenced herein.

10. Changes from previous issue. Marginal notations are not used in this revision to identify changes with respect to the previous issue due to the extent of the changes.

Custodians:
Air Force - 99

Preparing activity:
DLA-IS

(Project 5310-2011-005)

.
NOTE: The activities listed above were interested in this document as of the date of this document. Since organizations and responsibilities can change, you should verify the currency of the information above using the ASSIST Online database at https://assist.daps.dla.mil .