Downloaded from http://www.everyspec.com

INCH-POUND

MS16633D
1 May 2012
SUPERSEDING
MS16633C
24 April 1990

DETAIL SPECIFICATION SHEET

RING, RETAINING, EXTERNAL, “E”
(REDUCED SECTION TYPE)

This specification is approved for use by all Departments and Agencies of the Department of Defense.

The requirements for acquiring the product described herein shall consist of this specification sheet and procurement specification MIL-R-21248.

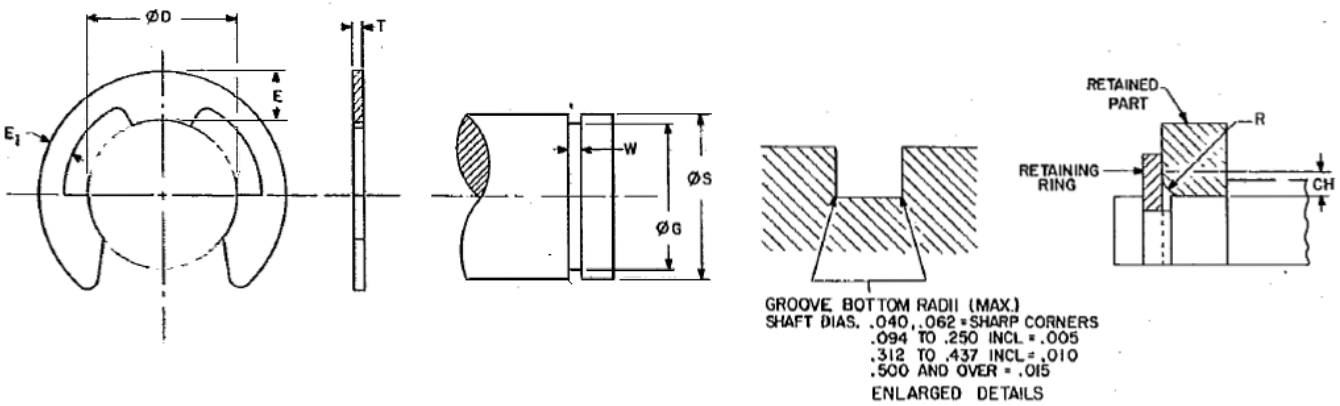

FIGURE 1. RING, RETAINING.

Downloaded from http://www.everyspec.com

TABLE 1 DIMENSIONS.

ØS SHAFT (REF)		ØD FREE		E LARGE HEIGHT	T 1/ THICKNESS		ØG RECOMMENDED GROOVE (REF)		W WIDTH RECOMMENDED GROOVE (REF)		R 3/ OF RETAINED PART (REF)	CH 3/ OF RETAINED PART (REF)	E_1 SMALL SECTION HEIGHT
INCH	MM	BASIC	TOL	(REF)	BASIC	TOL	BASIC	TOL	BASIC	TOL	MAX	MAX	(REF)
.040	1.0	.025		.027	.010	±.001	.026	+.002	.012		.015	.010	.012
.062	1.5	.051		.052	.010		.052	-.000	.014	+.002	.030	.020	.022
.094	2.4	.073		.057	.015		.074	.0015	.020	-.000	.040	.030	.022
.110	2.8	.076	+.001	.150	.015		.079	FIM 2/	.020		.080	.060	.060
.125	3.2	.094	-.003	.068	.015		.095		.020		.040	.030	.030
.140	3.6	.102		.084	.025		.105		.030		.060	.045	.038
.156	4.0	.114		.084	.025		.116	+.002	.030		.060	.045	.033
.172	4.3	.125		.094	.025	±.002	.127	-.000	.030		.060	.045	.040
.188	4.8	.145		.095	.025		.147	.002	.030		.060	.045	.035
.219	5.6	.185		.126	.025		.188	FIM 2/	.030		.060	.045	.045
.250	6.4	.207		.160	.025		.210		.030		.060	.045	.055
.312	7.9	.243		,128	.025		.250		.030	+.003	.060	.045	.047
.375	9.5	.300	+.002	,180	.035		.303		.040	-.000	.065	.050	.060
.438	11.1	.337	-.004	,175	.035		.343		.040		.065	.050	.062
.500	12.7	.392		.204	.042		.396		.047		.080	.060	.080
								+.003					
.625	15.9	.480		.230	.042		.485	-.000	.047		.080	.060	.090
.744	18.9	.616	+.003	.192	.050		.625	.004	.056		.080	.045	.078
.750	19.0	.574	-.005	.273	.050		.580	FIM 2/	.056		.085	.065	.110
.875	22.2	.688		.316	.050		.675		.056		.085	.065	.120
.984	25.0	.822		.339	.050		.835		.056		.085	.065	.130
								+.005					
1.188	30.2	1.066		.280	.062	±.003	1.079	-.000	.068		.090	.070	.130
1.375	34.9	1.213	+.006	.331	.062		1.230	.005	.068	+.004	.090	.070	.140
			-.010					FIM 2/		-.000			

1/ T - THICKNESS "T" APPLIES TO UNPLATED RINGS. FOR CORROSION RESISTANT STEEL AND PLATED RINGS, +.002 SHOULD BE ADDED TO THE MAXIMUM TOLERANCE, i.e. ±.002 SHOULD BE +.004/-.002.

2/ FIM - (FULL INDICATOR MOVEMENT) IS THE MAXIMUM ALLOWABLE DEVIATION OF CONCENTRICITY BETWEEN THE GROOVE AND THE SHAFT.

3/ R AND CH - RADII OR CHAMFERS ALLOWABLE ON PARTS TO BE RETAINED BY THE RINGS. ALLOWABLE THRUST LOADS FOR RINGS RETAINING PARTS WITH MAXIMUM CORNER RADII OR CHAMFERS, SEE NOTE (g) ON PAGE 7.

Downloaded from http://www.everyspec.com

REQUIREMENTS:

1. CLASSIFICATION: RETAINING RINGS FURNISHED UNDER THIS STANDARD SHALL BE TYPE I, CLASS 5 OF THE PROCUREMENT SPECIFICATION.

2. MATERIAL:

(a) CARBON SPRING STEEL, GRADE 1060 THRU 1095 (UNS G10600 THRU G10950) IN ACCORDANCE WITH ASTM A 568/A568M OR ASTM A684/A684M.
(b) CORROSION RESISTANT STEEL, IN ACCORDANCE WITH SAE AMS 5520 (UNS S15700).
(c) BERYLLIUM COPPER, ALLOY NUMBER 170 (UNS C17000) OR ALLOY NUMBER 172 (UNS C17200) IN ACCORDANCE WITH ASTM B194.

3. HARDNESS

TABLE II. HARDNESS.

ØSHAFT (REF)	CARBON STEEL	CORROSION RESISTANT STEEL	BERYLLIUM COPPER
.040			79-82 HR15N
.062 TO .125 INCL	84.5-87.0 HRI5N	82.5-86 HRI5N	79-82 HRI5N
.140 TO .312 INCL	66.5-71 HR30N	63-69.5 HR30N	56.5-68 HR30N
.375 TO 1.375 INCL	47-52 HRC	44-51 HRC	37-43 HRC

4. PROTECTIVE FINISH OR TREATMENT:

a. CARBON STEEL - SHALL BE AS SPECIFIED (SEE TABLE III OR IV)

1. CADMIUM PLATE IN ACCORDANCE WITH SAE AMS-QQ-P-416, TYPE II, CLASS 3 OR ASTM B 696, TYPE II, CLASS 5.
2. ZINC COAT IN ACCORDANCE WITH ASTM B633, TYPE II, CLASS Fe/Zn 5 or ASTM B 695, TYPE II, CLASS 5.
3. PHOSPHATE COAT IN ACCORDANCE WITH MIL-DTL-16232, TYPE Z, CLASS 2.

b. CORROSION RESISTANT STEEL - SHALL BE CLEANED, DESCALED AND PASSIVATED IN ACCORDANCE WITH SAE AMS2700.

5. PART NUMBER: THE BASIC MS PART NUMBER IS FOLLOWED BY A DASH NUMBER TAKEN FROM TABLE III OR IV.

EXAMPLE: MS16633-1118 IS THE PART NUMBER FOR A CARBON STEEL, CADMIUM PLATE, EXTERNAL, “E” RETAINING RING FOR USE ON A 1.118 SHAFT DIAMETER.

Downloaded from http://www.everyspec.com

TABLE III. DASH NUMBERS FOR MS16633.

Ø S SHAFT (REF)	1/ CARBON STEEL CADMIUM PLATE DASH NO	1/ CARBON STEEL ZINC COAT DASH NO	1/ CARBON STEEL PHOSPHATE COAT DASH NO	STEEL CORROSION RESISTANT DASH NO	1/ BERYLLIUM COPPER DASH NO
.040					-5004 2/
.062	-1006	-2006	-3006	-4006	-5006
.094	-1009	-2009	-3009	-4009	-5009
.110	-1011	-2011	-3011	-4011	-5011
.125	-1012	-2012	-3012	-4012	-5012
.140	-1014	-2014	-3014	-4014	-5014
.156	-1015	-2015	-3015	-4015	-5015
.172	-1017	-2017	-3017	-4017	-5017
.188	-1018	-2018	-3018	-4018	-5018
.219	-1021	-2021	-3021	-4021	-5021
.250	-1025	-2025	-3025	-4025	-5025
.312	-1031	-2031	-3031	-4031	-5031
.375	-1037	-2037	-3037	-4037	-5037
.438	-1043	-2043	-3043	-4043	-5043
.500	-1050	-2050	-3050	-4050	-5050
.625	-1062	-2062	-3062	-4062	-5062
.744	-1074	-2074	-3074	-4074	-5074
.750	-1075	-2075	-3075	-4075	-5075
.875	-1087	-2087	-3087	-4087	-5087
.984	-1098	-2098	-3098	-4098	-5098
1.188	-1118	-2118	-3118	-4118	-5118
1.375	-1137	-2137	-3137	-4137	-5137

1/ SUBSTITUTE CORROSION RESISTANT STEEL WHEN USED IN FOOD PROCESSING MACHINERY, OR IN FUEL OR LUBRICATION SYSTEMS, OR WHEN USED AT TEMPERATURES OVER 450°F (233°C).

2/ DASH NO. -5004 SUPERSEDES DASH NUMBER -4.

Downloaded from http://www.everyspec.com

TABLE IV. SUBSTITUTION TABLE, CROSS REFERENCE PART NUMBERS

Ø S SHAFT (REF)	INACTIVE CARBON STEEL MS16633	SUBSTITUTE 1/ CARBON STEEL CADMIUM PLATE MS16633	SUBSTITUTE 1/ CARBON STEEL ZINC COAT MS16633	SUBSTITUTE 1/ CARBON STEEL PHOSPHATE COAT MS16633
.062	-6	-1006	-2006	-3006
.094	-1	-1009	-2009	-3009
.110	-11	-1011	-2011	-3011
.125	-12	-1012	-2012	-3012
.140	-14	-1014	-2014	-3014
.156	-15	-1015	-2015	-3015
.172	-17	-1017	-2017	-3017
.188	-18	-1018	-2018	-3018
.219	-21	-1021	-2021	-3021
.250	-25	-1025	-2025	-3025
.312	-31	-1031	-2031	-3031
.375	-37	-1037	-2037	-3037
.438	-43	-1043	-2043	-3043
.500	-50	-1050	-2050	-3050
.625	-62	-1062	-2062	-3062
.744	-74	-1074	-2074	-3074
.750	-75	-1075	-2075	-3075
.875	-87	-1087	-2087	-3087
.984	-98	-1098	-2098	-3098
1.188	-118	-1118	-2118	-3118
1.375	-137	-1137	-2137	-3137

1/ SUBSTITUTE CORROSION RESISTANT STEEL WHEN USED IN FOOD PROCESSING MACHINERY, OR IN FUEL OR LUBRICATION SYSTEMS, OR WHEN USED AT TEMPERATURES OVER 450°F (233°C).

Downloaded from http://www.everyspec.com

NOTES:

1. UNLESS OTHERWISE SPECIFIED, ALL DIMENSIONS ARE IN INCHES.

2. IN THE EVENT OF A CONFLICT BETWEEN THE TEXT OF THIS STANDARD AND THE REFERENCES CITED HEREIN, THE TEXT OF THIS STANDARD SHALL TAKE PRECEDENCE.

3. RECOMMENDED DESIGN LIMITATIONS AND USAGE.

(a) INTENDED USE- TO PROVIDE UNUSUALLY LARGE SHOULDERS FOR POSITIONING AND MAINTAINING MACHINE COMPONENTS ON SHAFTS. THEY ARE APPLIED RADIALLY AND WITHSTAND CONSIDERABLE THRUST LOAD. THEY ARE OF ADVANTAGE WHERE AXIAL ASSEMBLY OF A RETAINING RING IS NOT POSSIBE AND WHERE FAST ASSEMBLY FOR MASS PRODUCTION LINES IS ESSENTIAL. THE USE OF THE FOLLOWING FORMULAS ARE BASED ON THE FACT THAT THE RING WILL NOT FAIL IN COMPRESSION.

LIMITATION ON USE- THE FOLLOWING FORMULAS ARE NOT TO BE USED FOR BRITTLE MATERIALS SUCH AS CAST IRON, ETC.

WARNING - RINGS SHOULD NOT BE OVER EXPANDED DURING INSTALLATION SINCE THIS WILL LEAD TO RING FAILURE. IF RING HAS PLAY BETWEEN THE GROOVE DIAMETER AND THE INSIDE RING DIAMETER THIS INDICATES THAT THE RING HAS BEEN OVER EXPANDED, (PROVIDING GROOVE HAS BEEN MACHINED TO RECOMMENDED DIMENSIONS).

FOR APPROXIMATE SAFETY RPM LIMITS SEE TABLE V.

TABLE V. APPROXIMATE SAFETY RPM LIMITS.

Ø SHAFT(INCHES)		.250	.500	1.000
STEEL	RPM LIMIT	25,000	14,000	8,500
BERYLLIUM COPPER	RPM LIMIT	16,000	9,000	4,000

(b) ALLOWABLE THRUST LOAD CAPACITY OF THE RINGS. ABUTTING COMPONENTS TO HAVE SHARP CORNERS=

$$P = \frac{\pi STX}{3F}$$

WHERE:
P = ALLOWABLE THRUST LOAD (POUNDS)
S = SHAFT DIAMETER (INCHES)
T = RING THICKNESS (INCHES)
X = ULTIMATE SHEAR STRENGTH OF THE RING MATERIAL (PSI) 1/
F = FACTOR OF SAFETY

A SAFETY FACTOR, F= 3, IS RECOMMENDED SINCE THE RING UNDER LOAD IS SUBJECTED NOT ONLY TO PURE SHEAR STRESSES, BUT ALSO TO BENDING STRESSES.

(c) ALLOWABLE LOAD CAPACITY OF GROOVE WALL

$$P = \frac{\pi GdY}{3F}$$

WHERE:
P = ALLOWABLE COMPRESSION LOAD (POUNDS)
G = GROOVE DIAMETER (INCHES)
d = GROOVE DEPTH (INCHES)
Y = YIELD STRENGTH IN COMPRESSION OF THE GROOVE MATERIAL (PSI)
F = FACTOR OF SAFETY

TO INSURE A SAFE WORKING LOAD, A SAFETY FACTOR, F= 2, IS RECOMMENDED.

(d) MINIMUM DISTANCE BETWEEN OUTER GROOVE WALL AND END OF SHAFT =

$$Z = 2d$$

WHERE:
Z = MINIMUM DISTANCE BETWEEN OUTER GROOVE AND END OF SHAFT (INCHES)
d = GROOVE DEPTH {INCHES)

1/ X = 100,000 PSI ULTIMATE SHEAR STRENGTH FOR STEEL RINGS .010 AND .015 THICK.
X = 120,000 PSI ULTIMATE SHEAR STRENGTH FOR STEEL RINGS .025 THICH.
X = 150,000 PSI ULTIMATE SHEAR STRENGTH FOR STEEL RINGS OVER .025 THICK.
X = 95,000 PSI ULTIMATE SHEAR STRENGTH FOR BERYLLIUM COPPER RINGS .010 THICK.

Downloaded from http://www.everyspec.com

(e) DIFFERENTIAL ROTATION =

THE CONDITIONS UNDER WHICH A RETAINING RING MAY BE USED WHEN ADJACENT PARTS ROTATE RELATIVE TO IT, FALL INTO TWO CATEGORIES:

1. WHERE NO THRUST IS EXERTED BY ADJACENT PART; IN THIS CASE, DIFFERENTIAL ROTATION OF RING AND ADJACENT PART CREATES NO ELEMENT OF RISK IN THE APPLICATION OF THE RINGS BECAUSE NO FUNCTIONAL TORQUE IS EXERTED BY THE MACHINE PART ON THE RING.

2. CONSIDERATION MUST BE GIVEN TO THE MAGNITUDE OF THE THRUST INVOLVED. THE FRICTION MOMENT MAY NOT EXCEED THE BENDING MOMENT, WHICH THE RING CAN TOLERATE WITHOUT RELEASING ITS PRESSURE AGAINST THE BOTIOM OF THE GROOVE, FORMULATED AS FOLLOWS:

$$fPN \leq \frac{STE_1^2}{18} \quad \text{OR} \quad P \leq \frac{STE_1^2}{f18N}$$

WHERE:
P = ALLOWABLE THRUST LOAD EXERTED BY ADJACENT PART (POUNDS)
f = COEFFICIENT OF FRICTION
s = WORKING STRESS OF RING UNDER MAXIMUM EXPANSION (PSI) 2/
T = RING THICKNESS (INCHES)
E_1 = LARGEST WIDTH SECTION OF RING (INCHES)
N = NEUTRAL RING DIAMETER (INCHES), FREE DIAMETER PLUS 1 1/2 E DIMENSION

IN SUCH CASES WHERE DIFFERENTIAL ROTATION OCCURS, THE CALCULATION SHOULD BE BASED ON THE MAXIMUM POSSIBLE VALUE OF THE COEFFICIENT OF FRICTION.

(f) IMPACT CAPACITY OF RING OR GROOVE WALL =

$I_R = \frac{PT}{2}$ - FOR THE RING (INCH POUNDS), ABUTTING COMPONENTS TO HAVE SHARP CORNERS.

$I_G = \frac{Pd}{2}$ - FOR THE GROOVE (INCH POUNDS)

WHERE:
P = ALLOWABLE THRUST LOAD OF RING OR GROOVE (POUNDS)
T = RING THICKNESS (INCHES)
I_G = IMPACT CAPACITY OF GROOVE WALL (INCH POUNDS)
d = GROOVE DEPTH (INCHES)
I_R = IMPACT CAPACITY OF RING (INCH POUNDS)

(g) LOAD CAPACITY, WITH THE RETAINED PART RADIUSED OR CHAMFERED.

THE ALLOWABLE THRUST LOADS, WHEN COMPUTED FROM THE FORMULAS ON PAGE 6, WILL NOT BE AFFECTED WHEN THE (E) RINGS ARE USED AGAINST PARTS HAVING CORNER RADII OR CHAMFERS UP TO THE LISTED MAXIMUM DIMENSIONS.

2/ S = 250,000 PSI WORKING STRESS FOR RINGS OF CARBON STEEL OR CORROSION RESISTANT STEEL.
S = 180,000 PSI WORKING STRESS FOR RINGS OF BERYLLIUM COPPER.

4. CHANGES FROM PREVIOUS ISSUE. MARGINAL NOTATIONS ARE NOT USED IN THIS REVISION TO IDENTIFY CHANGES WITH RESPECT TO THE PREVIOUS ISSUE DUE TO THE EXTENT OF THE CHANGES.

MILITARY INTEREST

Custodians:
Army - AR
Navy - OS
Air Force - 99

Review activities:
Army – AV, GL, MI

Preparing activity:
DLA - IS

(Project 5325-2012-007)

NOTE: The activities listed above were interested in this document as of the date of this document. Since organizations and responsibilities can change, you should verify the currency of the information above using the ASSIST Online database at https://assist.dla.mil.