Downloaded from http://www.everyspec.com

FSC TOP CLASS
2040

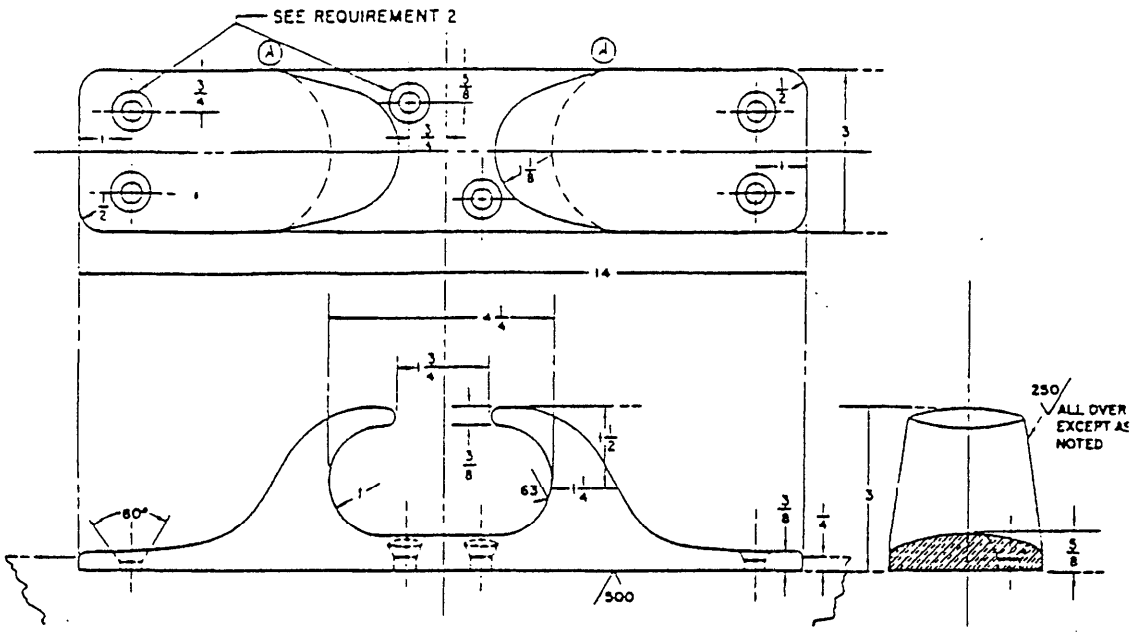

REQUIREMENTS

(A) 1. Chock shall be commercial bronze of tensile strength of not less than 30,000 p.s.i.

2. Holes 13/32 inch diameter countersink to suit 3/8 inch diameter flat head machine screws.

3. The allowable tolerances shall be plus or minus 1/8 inch.

4. Used on weather deck of boats for positioning and control of boat handling lines.

(B) CANCELED AFTER 4 MAY 1988.

NO SUPERSEDING STANDARD.

APPROVED 9 JUL 1952 REVISED (A) 2 JUN 1959 (B) 4 MAY 1988

(A) MS part number: MS15174-1		(A) FIIN: 266-9148
P.A. Ships Other Cust	TITLE (A) CHOCK, ROPE, OPEN, RAIL, 14-INCH, MARINE HARDWARE	MILITARY STANDARD MS 15174 (SHIPS)
PROCUREMENT SPECIFICATION: NONE	SUPERSEDES:	SHEET 1 OF 1

DD FORM 1 NOV 65 672-1 N LIMITED COORDINATION PREVIOUS EDITIONS OF THIS FORM ARE OBSOLETE. (Project 2040-N184)

NOTICE.—When Government drawings, specifications, or other data are used for any purpose other than in connection with a definitely related Government procurement operation, the United States Government thereby incurs no responsibility, nor any obligation whatsoever; and the fact that the Government may have formulated, furnished, or in any way supplied the said drawings, specifications, or other data is not to be regarded by implication or otherwise as in any manner licensing the holder or any other person or corporation, or conveying any rights or permission to manufacture, use, or sell any patented invention that may in any way be related thereto.

This standard has been approved by the Bureau of Ships, Department of the Navy, and is mandatory for use by that activity. All other military activities are required to employ this standard where suitable.

DISTRIBUTION STATEMENT A. Approved for public release; distribution is unlimit