Downloaded from http://www.everyspec.com

FED. SUP CLASS
4730

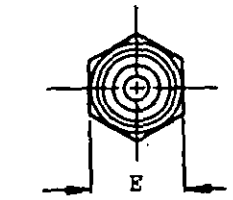

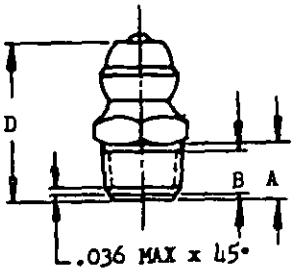

FIGURE 1

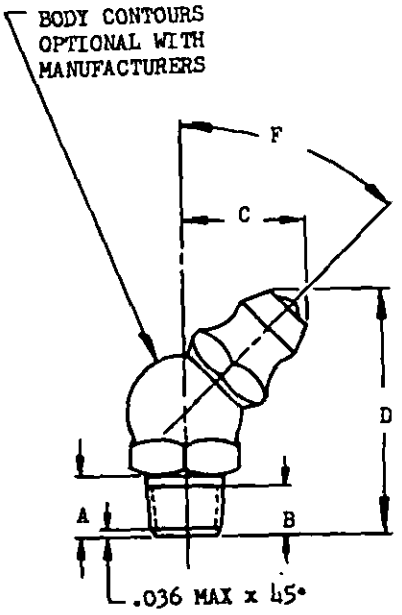

FIGURE 2

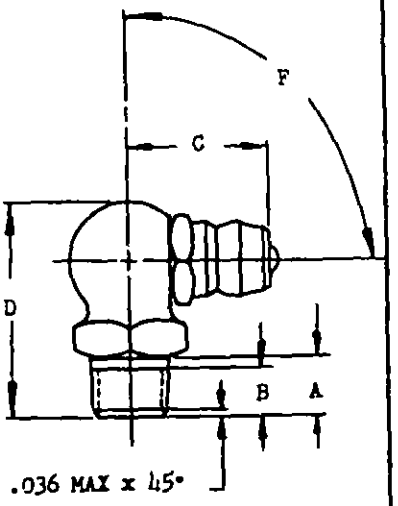

FIGURE 3

MS PART NO.	FIIN	FIG	(a) THREAD T	A ±.031 (A)	(b) B (A)	C MAX	D ±.062	E ±.003 (A)	F
MS15001-1		1	1/4-28 UNS-2A	.187	.109	--	.500	.312	--
MS15001-2				.625	.203		.937		
MS15001-3		2		.187	.109	.406	.812	.375	45°
MS15001-4		3				.531	.781		90°

(A) (a) 1/4-28 UNIFIED NATIONAL FORM OF THREAD WITH 3/4 INCH DIAMETRAL TAPER PER FOOT: BASIC PITCH DIA AT SMALL END OF THREAD EQUALS .2224 TO .2257. FITTINGS SHALL BE SUITABLE FOR INSTALLATION TIGHTLY INTO 1/4-28 UNF-3B THREADED HOLE.

(b) MINIMUM EFFECTIVE THREAD.

MATERIAL: STEEL, SEE PROCUREMENT SPECIFICATION.

(A) FINISH: CADMIUM PLATE OR ZINC PLATE, SEE PROCUREMENT SPECIFICATION.

DIMENSIONS IN INCHES. UNLESS OTHERWISE SPECIFIED, TOLERANCES: ANGLES ±5°.

(A) TIP DESIGN OPTIONAL IN ACCORDANCE MS15000.

THIS STANDARD TAKES PRECEDENCE OVER DOCUMENTS REFERENCED HEREIN.

REFERENCED DOCUMENTS SHALL BE OF THE ISSUE IN EFFECT ON DATE OF INVITATIONS FOR BID.

PROVISIONS OF THIS STANDARD ARE THE SUBJECT OF INTERNATIONAL STANDARDIZATION AGREEMENTS. WHEN REVISION OR CANCELLATION OF THIS STANDARD IS PROPOSED, THE DEPARTMENTAL CUSTODIANS WILL INFORM THEIR RESPECTIVE DEPARTMENTAL STANDARDIZATION OFFICE SO THAT APPROPRIATE ACTION MAY BE TAKEN RESPECTING THE INTERNATIONAL AGREEMENT CONCERNED.

APPROVED 12 Jul '51 REVISED (A) 27 Mar 59

P.A.	Other Interest	TITLE	MILITARY STANDARD
Navy-BuAer Other Cust Army Ord USAF	International	FITTINGS, LUBRICATION (HYDRAULIC) SURFACE CHECK, 1/4-28 TAPER THREADS, STEEL, TYPE I	MS15001
Procurement Specification MIL-F-3541		SUPERSEDES:	SHEET 1 OF 1

DD FORM (1 SEP 57) 672 (Coordinated) PREVIOUS EDITIONS OF THIS FORM ARE OBSOLETE.

NOTICE—When Government drawings, specifications, or other data are used for any purpose other than in connection with a definitely related Government procurement operation, the United States Government thereby incurs no responsibility, nor any obligation whatsoever; and the fact that the Government may have formulated, furnished, or in any way supplied the said drawings, specifications, or other data is not to be regarded by implication or otherwise as in any manner licensing the holder or any other person or corporation, or conveying any rights or permission to manufacture, use, or sell any patented invention that may in any way be related thereto.

This military standard is approved by the Department of Defense and is mandatory on all activities. Selection for all new engineering and design applications and for repetitive use shall be made from this document.