Downloaded from http://www.everyspec.com

REVIEW INTEREST: DCSC, 69
USER INTEREST: YD, ATAC

FED. SUP CLASS
2805

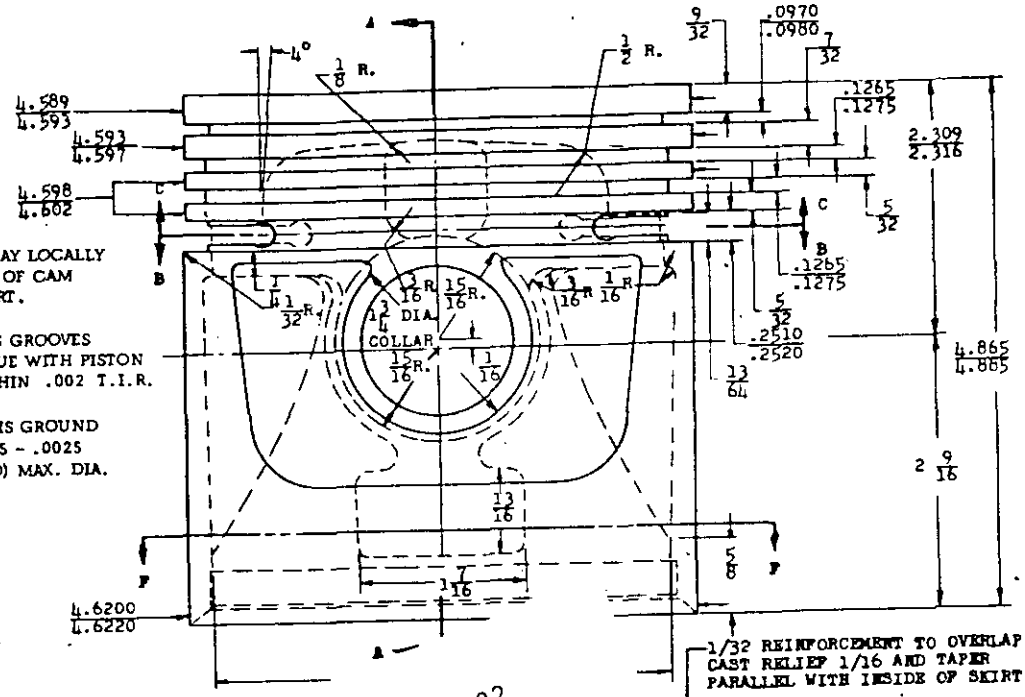

RING LANDS MAY LOCALLY SHOW EFFECT OF CAM GRINDING SKIRT.

SIDES OF RING GROOVES MUST RUN TRUE WITH PISTON PIN BORE WITHIN .002 T.I.R.

PISTON SKIRT IS GROUND TAPERED .0015 - .0025 (.002 DESIRED) MAX. DIA. AT BOTTOM.

1/32 REINFORCEMENT TO OVERLAP CAST RELIEF 1/16 AND TAPER PARALLEL WITH INSIDE OF SKIRT

JIGGING BOSSES OR NOTCHES PERMISSIBLE AS QUALIFIED.

(B) CANCELED AFTER 6 April 1982
NO SUPERSEDING STANDARD.

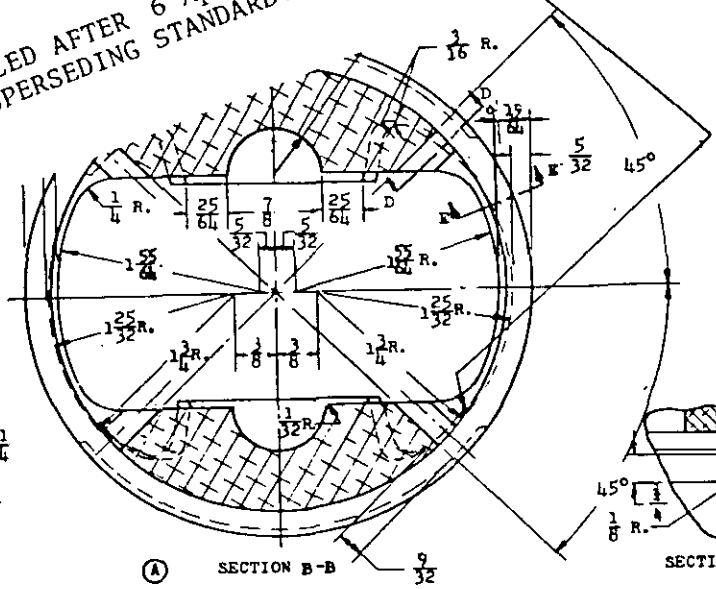

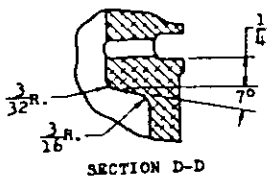

SECTION D-D

(A) SECTION B-B

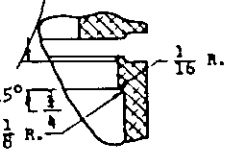

SECTION E-E

WEIGHT OF FINISHED PISTON 1381 ± 4 GRAMS.

(A) ENTIRE STANDARD REVISED

APPROVED 24 OCTOBER 1955 REVISED (A) 15 DEC 1965 (B) 6 APRIL 1982

P.A. MO (ERDL) Other Cust A.F. - 69 NAVY - YD	TITLE PISTON, INTERNAL COMBUSTION ENGINE: 4-5/8" x 4-7/8"	PART NO. MS 13887-1 MILITARY STANDARD MS 13887
PROCUREMENT SPECIFICATION MIL-E-11275	SUPERSEDES.	SHEET 1 OF 6

DD FORM 1 APR 57 672-1 (Combined)

This Military Standard has been approved by the Department of Defense and is mandatory for use by all Departments and Agencies of the Department of Defense. Selection for all new engineering and design applications and for repetitive use shall be made from this document.