Downloaded from http://www.everyspec.com

FED. SUP CLASS
5340

MS 122076 THRU MS 122115

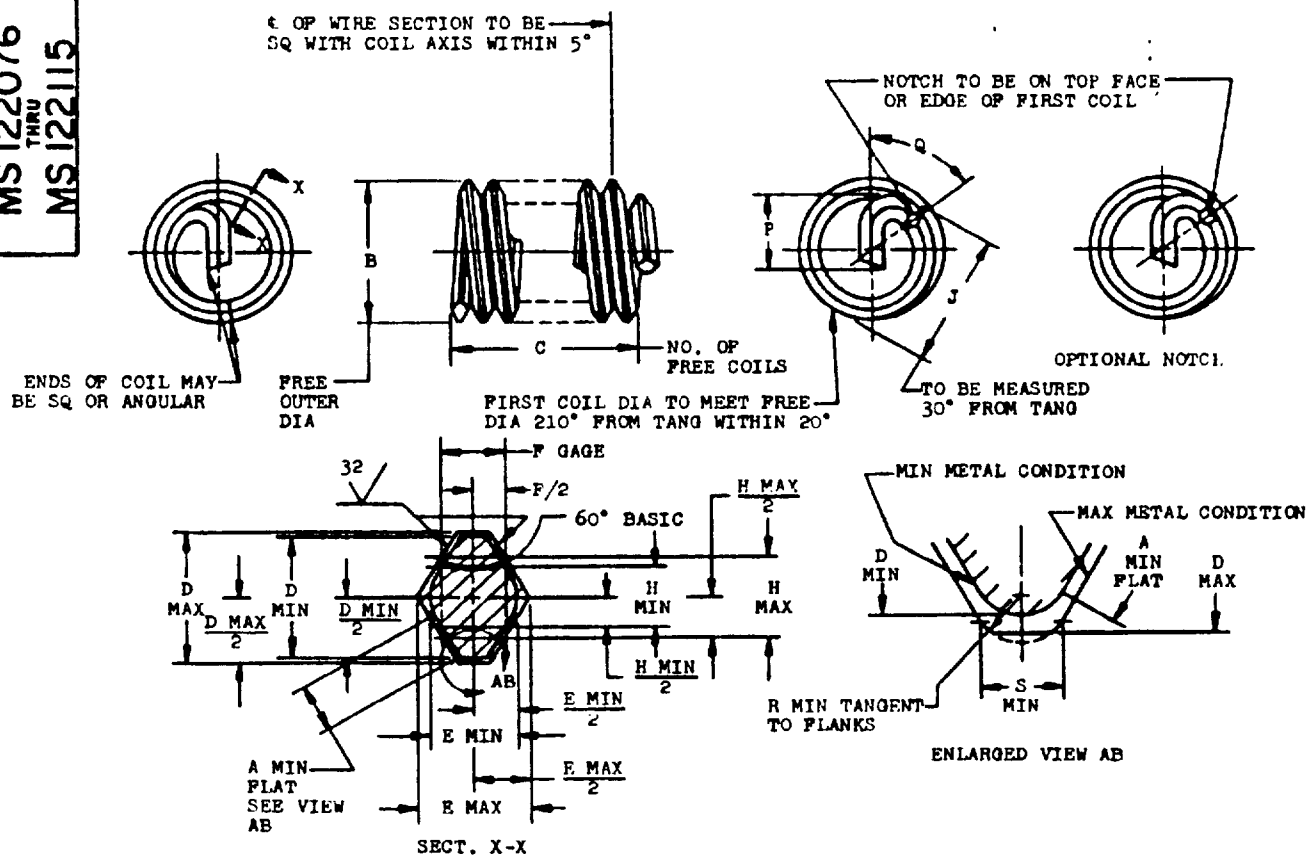

(D)

THREAD SIZE	** NOMINAL LENGTH	A MIN	B MIN	B MAX	C* ±.250 COIL	D MIN	D MAX	E MIN	E MAX	F GAGE	H MIN	H MAX
.086 -56	.086	.0027	.110	.119	3.000	.0163	.0193	.0126	.0156	.00893	.0112	.0116
.099 -48	.099	.0043	.128	.139	2.875	.0196	.0226	.0152	.0182	.01042	.01313	.01353
.112 -40	.112	.0068	.144	.159	2.750	.0241	.0271	.0189	.0219	.01250	.01584	.01624
.125 -40	.125	.0068	.158	.173	3.250	.0241	.0271	.0189	.0219	.01250	.01584	.01624
.138 -32	.138	.0076	.178	.193	2.750	.0295	.0338	.0233	.0273	.01563	.01985	.02030
.164 -32	.164	.0076	.205	.220	3.500	.0295	.0338	.0233	.0273	.01563	.01985	.02030
.190 -24	.190	.0120	.244	.259	2.875	.0410	.0449	.0305	.0365	.02083	.02656	.02706
.250 -20	.250	.0164	.310	.330	3.375	.0500	.0540	.0378	.0438	.02500	.03198	.03248
.3125-18	.312	.0176	.380	.400	4.000	.0560	.0600	.0416	.0486	.02778	.03558	.03608
.375 -16	.375	.0215	.452	.472	4.375	.0636	.0677	.0477	.0547	.03125	.04009	.04059
.4375-14	.438	.0267	.526	.551	4.500	.0730	.0770	.0545	.0625	.03571	.04589	.04639
.500 -13	.500	.0273	.597	.622	4.875	.0758	.0829	.0593	.0673	.03846	.04946	.04996
.5625-12	.562	.0334	.669	.694	5.125	.0861	.0900	.0649	.0729	.04167	.05363	.05413
.625 -11	.625	.0351	.742	.767	5.250	.0909	.0980	.0715	.0795	.04545	.05855	.05905
.750 -10	.750	.0402	.881	.906	5.875	.1007	.1079	.0795	.0875	.05000	.06445	.06495
.875 -9	.875	.0466	1.022	1.052	6.250	.1124	.1199	.0892	.0972	.05556	.07167	.07217
1.000 -8	1.000	.0544	1.166	1.196	6.375	.1264	.1350	.1004	.1094	.06250	.08069	.08119
1.125 -7	1.125	.0645	1.315	1.355	6.125	.1451	.1546	.1160	.1250	.07143	.09229	.09279
1.250 -7	1.250	.0645	1.443	1.483	7.000	.1451	.1546	.1160	.1250	.07143	.09229	.09279
1.375 -6	1.375	.0775	1.598	1.643	6.500	.1695	.1799	.1368	.1458	.08333	.10775	.10825
1.500 -6	1.500	.0775	1.727	1.772	7.250	.1695	.1799	.1368	.1458	.08333	.10775	.10825

(D) FOR CHANGES SEE SHEETS 1 AND 2.

THIS STANDARD WAS DEVELOPED COOPERATIVELY WITH THE MILITARY SERVICES BY THE SAE AEROSPACE PROPULSION DIVISION.

APPROVED 29 May 53 REVISED (A) 26 May 59 (B) 24 Oct 66 (C) 15 Oct 69 (D) 24 Feb 76

User: Army-EL, ME, MI, MU Navy-MC, OS Air Force-

Review activities: Navy- Air Force-82

This military standard is approved for use by all Departments and Agencies of the Department of Defense. Selection for all new engineering and design applications and for repetitive use shall be made from this document.

P.A.	USAF - 11	TITLE	MILITARY STANDARD
Other Cust	Army - AV Navy - AS	INSERT, CRES HELICAL COIL COARSE THREAD, 1 DIA NOMINAL LENGTH	MS 122076 THRU 122115
PROCUREMENT SPECIFICATION MIL-I-8846		SUPERSEDES: MS21208 IN PART	SHEET 1 OF 2

Project No. 5340-1199

Downloaded from http://www.everyspec.com

FED. SUP CLASS 5340

(D)

THREAD SIZE	J MIN	J MAX	P MIN	P MAX	Q	R MIN	S MIN	APPROX WEIGHT LB/100	PART NUMBERS NOTCHED	PART NUMBERS UNNOTCHED(a)
.086 -56	.103	.111	.062	.080	75°-150°	.0032	.0056	.0051	MS122095	
.099 -48	.120	.131	.070	.090	75°-150°	.0038	.0065	.0077	MS122115	
.112 -40			.070	.095	25°-100°	.0045	.0078	.0121	MS122076	MS122096
.125 -40			.078	.108	25°-100°	.0045	.0078	.0154	MS122077	MS122097
.138 -32			.091	.121	25°-100°	.0056	.0098	.0243	MS122078	MS122098
.164 -32			.118	.153	20°-100°	.0056	.0098	.0355	MS122079	MS122099
.190 -24			.141	.176	15°- 90°	.0075	.0130	.0573	MS122080	MS122100
.250 -20			.182	.233	20°- 80°	.0090	.0156	.145	MS122081	MS122101
.3125-18	.375	.390	.214	.286	20°- 80°	.0100	.0174	.232	MS122082	MS122102
.375 -16	.445	.462	.269	.348	20°- 80°	.0113	.0195	.391	MS122083	MS122103
.4375-14	.518	.536	.313	.411	20°- 80°	.0129	.0223	.667	MS122084	MS122104
.500 -13	.586	.606	.348	.458	20°- 80°	.0139	.0240	.794	MS122085	MS122105
.5625-12	.656	.676	.390	.520	20°- 80°	.0150	.0260	1.235	MS122086	MS122106
.625 -11	.727	.747	.421	.567	20°- 80°	.0164	.0284	1.515	MS122087	MS122107
.750 -10	.840	.885	.453	.640	60°-120°	.0180	.0312	2.778	MS122088	MS122108
.875 -9	.991	1.026	.500	.734	60°-120°	.0200	.0347	4.545	MS122089	MS122109
1.000 -8	1.135	1.170	.526	.781	60°-120°	.0226	.0391	5.882	MS122090	MS122110
1.125 -7	1.260	1.315	.557	.843	60°-120°	.0258	.0446	8.392	MS122091	MS122111
1.250 -7	1.366	1.416	.679	.937	60°-120°	.0258	.0446	10.487	MS122092	MS122112
1.375 -6	1.545	1.598	.689	1.093	60°-120°	.0301	.0521	14.505	MS122093	MS122113
1.500 -6	1.676	1.727	.811	1.187	60°-120°	.0301	.0521	17.563	MS122094	MS122114

** 1. NOMINAL LENGTH EQUALS BASIC THICKNESS OF PLATE FOR INSERT ASSEMBLY.
2. ASSEMBLED LENGTH OF INSERT TO BE AS SPECIFIED ON MS33537.
(D) 3. NUMBER OF FREE COILS TO BE COUNTED AND ASSEMBLED LENGTH OF INSERT TO BE MEASURED 90° FROM TANG.
4. MATERIAL: STEEL, CORROSION RESISTANT, AMS 7245 (MATERIAL AND MFG).
5. SURFACE TEXTURE: ANSI B46.1-1962.
6. INSERT, WHEN ASSEMBLED IN TAPPED HOLE AS SPECIFIED IN MS33537, SHALL PRODUCE A FINISHED THD MEETING ALL REQUIREMENTS OF MIL-S-7742 AND SHALL ACCEPT EXTERNAL MIL-S-8879 THREADS.
7. DIMENSIONS IN INCHES.
8. IDENTIFICATION: MARK PART NUMBER AND MANUFACTURER'S IDENTIFICATION ON CONTAINER.
9. DO NOT USE UNASSIGNED PART NUMBERS.
(a) UNNOTCHED INSERTS INACTIVE FOR DESIGN AFTER 15 OCT 1969. USE NOTCHED INSERTS. NOTCHED INSERTS CAN UNIVERSALLY REPLACE THE INACTIVATED INSERTS, BUT THE INACTIVATED INSERTS CANNOT REPLACE THE SUPERSEDING NOTCHED INSERTS.

AS & AMS ARE SOCIETY OF AUTOMOTIVE ENGINEERS, INC., PUBLICATIONS.
THIS STANDARD WAS DEVELOPED COOPERATIVELY WITH THE MILITARY SERVICES BY THE SAE AEROSPACE PROPULSION DIVISION.

APPROVED 24 May 64 REVISED (C) 26 May 64 (E) 24 Oct 66 (D) FOR CHANGES SEE SHEETS 1 AND 2.

P.A. USAF - 11 Other Cust Army - AV Navy - AS	TITLE INSERT, CRES HELICAL COIL COARSE THREAD, 1 DIA NOMINAL LENGTH.	MILITARY STANDARD MS 122076 THRU 122115
PROCUREMENT SPECIFICATION MIL-I-8846	SUPERSEDES: MS21298 IN PART	SHEET OF

This military standard is approved for use by all Departments and Agencies of the Department of Defense. Selection for all new engineering and design applications and for repetitive use shall be made from this document.
Review activities: Army - WC Navy - Air Force - 82
User: Army - EL, ME, MI, MU Navy - MC, OS Air Force -