Downloaded from http://www.everyspec.com

NOT MEASUREMENT SENSITIVE

MIL-STD-3026A
21 March 2017

SUPERSEDING
MIL-STD-3026
29 August 2008

DEPARTMENT OF DEFENSE STANDARD PRACTICE

CHEMICAL CLEANING OF SEWAGE COLLECTION PIPING SYSTEMS ON NAVY SURFACE SHIPS

AMSC N/A FSC 4630

DISTRIBUTION STATEMENT A. Approved for public release. Distribution is unlimited.

Downloaded from http://www.everyspec.com

FOREWORD

1. This standard is approved for use by all Departments and Agencies of the Department of Defense.

2. This standard covers the requirements for the use of chemical cleaning processes to remove scale accumulations from Navy surface ship sewage collection piping systems.

3. Comments, suggestions, or questions on this document should be addressed to: Commander, Naval Sea Systems Command, ATTN: SEA 05S, 1333 Isaac Hull Avenue, SE, Stop 5160, Washington Navy Yard DC 20376-5160 or emailed to CommandStandards@navy mil, with the subject line "Document Comment". Since contact information can change, you may want to verify the currency of this address information using the ASSIST Online database at https://assist.dla.mil.

Downloaded from http://www.everyspec.com

CONTENTS

PARAGRAPH PAGE
1. SCOPE....1
1.1 Scope. 1
1.2 Classification. 1
1.3 Applicability. 1
2. APPLICABLE DOCUMENTS 1
2.1 General....1
2.2 Government documents. 1
2.2.1 Specifications, standards, and handbooks. 1
2.3 Non-Government publications. 2
2.4 Order of precedence. 3
3. DEFINITIONS 3
3.1 Borescope. 3
3.2 Component. 3
3.3 Graywater. 3
3.4 High lift booster station. 3
3.5 Hydrogen sulfide. 3
3.6 Inorganic. 3
3.7 Organic. 3
3.8 Scale. 3
3.9 Sewage. 3
3.10 Sewage piping. 3
3.10.1 Type A sewage piping system. 3
3.10.2 Type B sewage piping system. 3
3.11 Trap. 3
3.12 Ultrasonic test. 3
3.13 Zone. 3
3.14 Abbreviations and acronyms. 3
4. GENERAL REQUIREMENTS 4
4.1 Toxic chemicals, hazardous substances, or ozone-depleting chemicals. 4
4.2 Recycled, recovered, environmentally preferable materials, or biobased materials. 4
4.3 Utilities. 4
4.4 Sewage piping cleanliness. 4
5. DETAILED REQUIREMENTS 5
5.1 Cleaning chemical. 5
5.1.1 Materials to be removed. 5
5.1.2 Sewage system deterioration. 5
5.2 Cleaning chemical product corrosion rates. 5
5.2.1 Corrosion testing. 5
5.2.2 Independent test laboratories. 5
5.3 Neutralizer. 6
5.4 Defoamer. 6
5.5 Equipment. 6
5.5.1 Personal protective equipment (PPE). 6
5.5.2 Auxiliary equipment. 6
5.5.3 Basic equipment. 6
5.5.4 Special interzone piping manifolds. 6
5.5.5 Test and monitoring equipment. 6
5.6 Personnel. 7
5.7 Safety and health precautions. 7
5.8 Areas to be cleaned. 8
5.9 Preliminary requirements. 8
5.9.1 Process accomplishment and control. 8
5.9.2 Operational requirement. 8

Downloaded from http://www.everyspec.com

PARAGRAPH PAGE

5.9.3 Ship survey. 8
5.9.4 Ship's force and contracting activity briefings. 9
5.9.5 Ship's force cooperation. 9
5.9.6 Safety data sheets (SDS). 9
5.9.7 Multiplex communication. 9
5.10 Job preparation. 9
5.10.1 Interference removal. 9
5.10.2 Lagging removal. 9
5.10.3 Securing sanitary spaces. 9
5.10.4 Securing graywater sources. 9
5.10.5 Sanitary system valve alignment and tag out. 9
5.10.6 Water flush and flow obstruction removal. 9
5.10.7 Locating and repairing water leaks. 9
5.10.8 Manual cleaning of components. 10
5.10.9 Electrical equipment tag out. 10
5.11 Sewage piping inspections and tests. 10
5.11.1 Visual inspections. 10
5.11.2 Borescope inspections. 10
5.11.3 UT measurements. 10
5.11.3.1 UT measurements for leaking piping. 10
5.11.3.2 UT measurements for non-leaking piping (optional). 11
5.11.4 Pre-chemical cleaning inspection. 11
5.11.4.1 Piping exterior inspection. 11
5.11.4.2 Piping leak repair. 11
5.11.4.3 Piping interior inspection. 11
5.11.4.4 UT measurements (background). 11
5.11.5 In-process chemical cleaning inspections. 11
5.11.5.1 Piping exterior inspection. 11
5.11.5.2 Piping interior inspection. 11
5.11.5.3 UT measurements (in-process). 12
5.11.6 Post-chemical cleaning inspection. 14
5.11.6.1 Piping interior inspection. 14
5.11.6.2 UT measurements (post-cleaning). 14
5.12 Equipment set-up. 14
5.12.1 Staging of material and equipment. 14
5.12.2 Ventilation verification and installation. 14
5.12.3 Supply pumping station set-up. 14
5.12.4 Return pumping station set-up. 14
5.12.4.1 Type A sewage piping systems. 15
5.12.4.2 Type B sewage piping systems. 15
5.12.5 Sanitary space set-up. 15
5.12.6 Interzone piping set-up. 15
5.12.7 Routing chemical cleaning hoses. 16
5.12.8 Covering susceptible equipment and deck drains. 16
5.13 Leakage handling. 16
5.13.1 Maintaining roving patrol. 16
5.13.2 Sewage/water leaks. 16
5.13.3 Chemical leaks. 16
5.13.4 Piping repair testing. 16
5.14 Establishing integrity of recirculation loop with water. 16
5.14.1 Recirculating with freshwater. 16
5.14.2 Isolating and repairing leaks. 16
5.15 Testing and renewing chemical cleaning solution. 16
5.15.1 Maximum strength. 16

Downloaded from http://www.everyspec.com

PARAGRAPH PAGE

5.15.2 Minimum strength. 17
5.15.3 Chemical solution sampling. 17
5.15.4 Chemical solution testing. 17
5.15.5 Renewing or replacing chemical solution. 17
5.16 Chemical cleaning procedures. 17
5.16.1 Preliminary. 17
5.16.2 Daily briefing. 17
5.16.3 Chemically cleaning piping system. 17
5.16.4 Evacuating partially spent cleaning solution. 18
5.16.5 Neutralizing and transferring cleaning solution. 18
5.16.6 Neutralizing sewage piping system. 18
5.16.7 Evacuating neutralizer solution. 18
5.16.8 Neutralizing and transferring neutralizer solution. 18
5.16.9 Piping system water flush. 18
5.16.10 Evacuating flush water solution. 18
5.16.11 Transferring flush water solution. 18
5.17 Post-chemical cleaning requirements. 18
5.17.1 Post-chemical cleaning inspection. 18
5.17.2 Disposing of wastewater. 18
5.17.3 Restoring sewage piping and sewage systems to operational condition. 18
5.17.3.1 Repairing/replacing valves and flanges. 18
5.17.3.2 Repairing/replacing temporary and deteriorated piping, and removing foreign objects. 19
5.17.3.3 Testing integrity of piping. 19
5.17.3.3.1 Type A system piping test. 19
5.17.3.3.2 Type B system piping test. 19
5.17.3.4 Cleaning and painting piping. 19
5.17.3.5 Replacing lagging. 19
5.17.3.6 Replacing interferences. 19
5.17.3.7 Uninstalling and removing supply pumping station. 19
5.17.3.8 Uninstalling and removing return pumping station. 19
5.17.3.8.1 Type A sewage piping systems. 19
5.17.3.8.2 Type B sewage piping systems. 20
5.17.3.9 Restoring sanitary and other affected spaces. 20
5.17.3.10 Opening graywater sources. 20
5.17.3.11 Removing chemical cleaning hoses. 20
5.17.3.12 Removing tags from electrical equipment. 20
5.17.3.13 Aligning and removing tags from sanitary system valves. 20
5.17.4 Conducting operational test of sewage system. 20
6. NOTES 20
6.1 Intended use. 20
6.2 Acquisition requirements. 20
6.3 Cleaning procedure briefing 21
6.4 Statement of wastewater disposal 21
6.5 Subject term (key word) listing. 21
6.6 Changes from previous issue. 21

Downloaded from http://www.everyspec.com

LIST OF FIGURES

FIGURE PAGE
1. Sequence of chemical cleaning inspections 13

LIST OF TABLES

TABLE PAGE
I. Metals to be exposed to corrosion tests 5
II. Maximum permissible corrosion rates for chemical cleaning products 5

Downloaded from http://www.everyspec.com

1. SCOPE

1.1 Scope. This standard covers the requirements for the use of chemical cleaning processes to remove scale accumulations from Navy surface ship sewage collection piping (hereinafter sewage piping unless otherwise indicated) systems.

1.2 Classification. Sewage piping systems requiring chemical cleaning are of the following types:

Type A – Non-vented, vacuum drain sewage piping system.

Type B – Vented gravity drain sewage piping system.

1.3 Applicability. Chemical cleaning processes covered by this standard are applicable to the sewage collection piping on surface ships.

2. APPLICABLE DOCUMENTS

2.1 General. The documents listed in this section are specified in sections 3, 4, or 5 of this standard. This section does not include documents cited in other sections of this standard or recommended for additional information or as examples. While every effort has been made to ensure the completeness of this list, document users are cautioned that they must meet all specified requirements of documents cited in sections 3, 4, or 5 of this standard, whether or not they are listed.

2.2 Government documents.

2.2.1 Specifications, standards, and handbooks. The following specifications, standards, and handbooks form a part of this document to the extent specified herein. Unless otherwise specified, the issues of these documents are those cited in the solicitation or contract.

DEPARTMENT OF DEFENSE SPECIFICATIONS

MIL-T-16420 - Tube, Copper-Nickel Alloy, Seamless, and Welded (Copper Alloy Numbers 715 and 706)

(Copies of this document are available online at http://quicksearch.dla.mil.)

2.2.2 Other Government documents, drawings, and publications. The following other Government documents, drawings, and publications form a part of this document to the extent specified herein. Unless otherwise specified, the issues of these documents are those cited in the solicitation or contract.

CODE OF FEDERAL REGULATIONS (CFR)

29 CFR 1915 - Occupational Safety and Health Standards for Shipyard Employment

(Copies of this document are available online at www.ecfr.gov.)

NAVAL SEA SYSTEMS COMMAND (NAVSEA) PUBLICATIONS

S9074-AR-GIB-010/278	-	Requirements for Fabrication Welding and Inspection, and Casting Inspection and Repair for Machinery, Piping, and Pressure Vessels
S9086-CH-STM-030/074	-	NSTM Chapter 074, Volume 3, Gas Free Engineering
S9086-KC-STM-010/300	-	NSTM Chapter 300, Electric Plant
S9086-RK-STM-010/505	-	NSTM Chapter 505, Piping Systems
S9086-T8-STM-010/593	-	NSTM Chapter 593, Pollution Control

Downloaded from http://www.everyspec.com

T9074-AS-GIB-010/271 - Requirements for Nondestructive Testing Methods

(Copies of these documents are available online via Technical Data Management Information System (TDMIS) at https://mercury.tdmis navy mil/ by searching for the document number without the suffix. Refer questions, inquiries, or problems to: DSN 296-0669, Commercial (805) 228-0669. These documents are available for ordering (hard copy) via the Naval Logistics Library at https://nll.ahf nmci.navy.mil. For questions regarding the NLL, contact the NLL Customer Service at nllhelpdesk@navy.mil, (866) 817-3130, or (215) 697-2626/DSN 442-2626.)

NAVAL SEA SYSTEMS COMMAND (NAVSEA) STANDARD ITEMS

NAVSEA Standard Item 009-01 - General Criteria; Accomplish

NAVSEA Standard Item 009-09 - Process Control Procedure (PCP); Provide and Accomplish

NAVSEA Standard Item 009-10 - Shipboard Asbestos-Containing Material (ACM); Control

NAVSEA Standard Item 009-11 - Insulation and Lagging Requirements; Accomplish

NAVSEA Standard Item 009-12 - Welding, Fabrication, and Inspection Requirements; Accomplish

NAVSEA Standard Item 009-23 - Interferences; Remove and Install

NAVSEA Standard Item 009-24 - Authorization, Control, Isolation, Blanking, and Tagging Requirements; Accomplish

NAVSEA Standard Item 009-32 - Cleaning and Painting Requirements; Accomplish

NAVSEA Standard Item 009-71 - Testing Requirements for Piping Systems; Accomplish

NAVSEA Standard Item 009-88 - Collection, Holding and Transfer (CHT) and Mogas Tanks, Spaces, and Piping, including Sewage or Mogas-Contaminated Tanks, Spaces, and Piping; Certify

(Copies of these documents are available from http://www.navsea.navy.mil/CNRMC/SERMC/SSRAC1/nsi/13nsi/13 htm.)

OPNAV INSTRUCTIONS

OPNAVINST 5100.23 - Navy Safety and Occupational Health Program Manual

(Copies of this document are available online at http://doni.documentservices.dla.mil/default.aspx.)

NOTE: Access to some websites in which certain government documents are available may be restricted to Government personnel. When this is the case, contact the Government activity sponsoring the chemical cleaning to obtain copies of the applicable documents.

2.3 Non-Government publications. The following documents form a part of this document to the extent specified herein. Unless otherwise specified, the issues of these documents are those cited in the solicitation or contract.

ASTM INTERNATIONAL

ASTM A312/A312M - Standard Specification for Seamless, Welded, and Heavily Cold Worked Austenitic Stainless Steel Pipes

ASTM B61 - Standard Specification for Steam or Valve Bronze Castings

ASTM E527 - Standard Practices for Numbering Metals and Alloys in the Unified Numbering System (UNS)

ASTM NACE/ASTM G31 - Standard Guide for Laboratory Immersion Corrosion Testing of Metals

Downloaded from http://www.everyspec.com

(Copies of these documents are available online at www.astm.org.)

NATIONAL FIRE PROTECTION ASSOCIATION (NFPA)

NFPA 306 - Standard for the Control of Gas Hazards on Vessels

(Copies of this document are available online at www.nfpa.org.)

2.4 Order of precedence. Unless otherwise noted herein or in the contract, in the event of a conflict between the text of this document and the references cited herein, the text of this document takes precedence. Nothing in this document, however, supersedes applicable laws and regulations unless a specific exemption has been obtained.

3. DEFINITIONS

3.1 Borescope. A device used to examine the interior of sewage piping consisting of a flexible tube with an eyepiece on one end and an objective lens on the other, linked together by a relay optical system in between.

3.2 Component. Items such as valves, fittings, traps, and anodes in the sewage and graywater systems.

3.3 Graywater. Discarded water from deck drains, lavatories, showers, dishwashers, laundries, galley, and medical facilities, but does not include industrial wastes, infectious wastes, and human body wastes.

3.4 High lift booster station. The high lift booster station provides for additional air to flush wastewater where the vertical lift is greater than recommended and the air admitted through the vacuum interface valve(s) or vacuum water closet(s) is not enough to lift the wastewater to the applicable main line.

3.5 Hydrogen sulfide. A flammable, poisonous gas that has an odor suggestive of rotten eggs.

3.6 Inorganic. A non-organic substance not arising from natural growth; mineral.

3.7 Organic. Any chemical compound containing carbon.

3.8 Scale. A dense, hard material that builds up in both freshwater- and seawater-serviced shipboard sewage drains that is composed predominantly of calcium and magnesium-based salts with traces of organic matter.

3.9 Sewage. Human body wastes and the wastes from toilets and other receptacles intended to receive or retain body wastes.

3.10 Sewage piping. Piping drains that serve water closets, urinals, and other fixtures that carry human waste.

3.10.1 Type A sewage piping system. A shipboard non-vented vacuum drain sewage piping system.

3.10.2 Type B sewage piping system. A shipboard vented gravity drain sewage piping system.

3.11 Trap. A P-type plumbing fitting installed for each plumbing fixture or for a group of not more than three fixtures that creates a water-seal to prevent odors from invading spaces served by associated drains.

3.12 Ultrasonic test. A test that uses high frequency sound energy to measure the wall thickness of sewage piping.

3.13 Zone. The portion of the sewage piping system designated for chemical cleaning.

3.14 Abbreviations and acronyms.

A2LA - American Association for Laboratory Accreditation

ASSIST - Acquisition Streamlining and Standardization Information System

AUTO - Automatic

C - Celsius

CFR - Code of Federal Regulations

Downloaded from http://www.everyspec.com

CHENG	-	Chief Engineer
Cu-Ni	-	Copper-Nickel
DLA	-	Defense Logistics Agency
DoD	-	Department of Defense
DOT	-	Department of Transportation
EPA	-	Environmental Protection Agency
GRP	-	Glass Reinforced Plastic
IDLH	-	Immediately Dangerous to Life and Health
NAVSEA	-	Naval Sea Systems Command
NFPA	-	National Fire Protection Agency
NSTM	-	Naval Ships' Technical Manual
OPNAV	-	Office of the Chief of Naval Operations
PPE	-	Personal Protective Equipment
SDS	-	Safety Data Sheets
UNS	-	Unified Numbering System
UT	-	Ultrasonic Thickness

4. GENERAL REQUIREMENTS

4.1 Toxic chemicals, hazardous substances, or ozone-depleting chemicals. The use of toxic chemicals, hazardous substances, or ozone-depleting chemicals shall be avoided, if feasible. See 5.1, 5.2, 5.3, and 5.4 for detailed requirements for chemicals used during the cleaning process.

4.2 Recycled, recovered, environmentally preferable materials, or biobased materials. Recycled, recovered, environmentally preferable, or biobased materials should be used to the maximum extent possible, provided that the material meets or exceeds the operational and maintenance requirements, and promotes economically advantageous life cycle costs.

4.3 Utilities. Unless otherwise specified (see 6.2), the following utilities needed for chemical cleaning shall be available at dockside for use:

a. Freshwater.
b. Seawater.
c. Compressed air at 90 to 100 pounds per square inch.
d. Electrical power.
e. Ventilation (supply and exhaust).

4.4 Sewage piping cleanliness. Sewage piping and components shall be considered clean when all foreign objects have been removed from the system and when there are only sporadic scale strips about 1/16 inch thick or less.

Downloaded from http://www.everyspec.com

5. DETAILED REQUIREMENTS

5.1 Cleaning chemical.

5.1.1 Materials to be removed. The chemical used in the cleaning shall be capable of removing materials that consist primarily of calcium carbonate, magnesium carbonate, and magnesium ammonium phosphate scale, and any other hard inorganic scale present in the sewage piping system.

5.1.2 Sewage system deterioration. The chemicals used in the cleaning (including cleaning chemicals, neutralizing compounds, and defoaming chemicals) shall not cause any significant detrimental effects to the sewage piping system or any other system components when used within the constraints established in this document and shall comply with the corrosion requirements of 5.2.

5.2 Cleaning chemical product corrosion rates. Permissible limits on the corrosion rates of the metals listed in table I shall be equal to or less than the rates listed in table II when tested in accordance with 5.2.1.

5.2.1 Corrosion testing. Corrosion rates shall be obtained by exposure of metal specimens to a solution of the cleaning chemical for a total period of at least 72 hours at 30±2 °C. The solution shall be tested at the most concentrated state anticipated for possible shipboard application. The corrosion analysis shall be performed by an independent laboratory (see 5.2.2) in accordance with ASTM NACE/ASTM G31. Permissible limits on the corrosion rates of the metals listed in table I shall be equal to or less than the rates listed in table II. Also, visual inspection of the specimens after exposure shall show no signs of cracking or pitting.

5.2.2 Independent test laboratories. All corrosion tests specified in this document shall be conducted by an independent testing laboratory that is accredited to ASTM NACE/ASTM G31. Accreditation shall be obtained from a recognized accreditation body such as American Association for Laboratory Accreditation (A2LA).

TABLE I. Metals to be exposed to corrosion tests.

Metal	UNS [1/] Number	Reference
90-10 CuNi [2/]	C70600	MIL-T-16420
70-30 CuNi	C71500	MIL-T-16420
90-10 CuNi welded with 70-30 CuNi	C70600	S9074-AR-GIB-010/278
Bronze	C92200	ASTM B61
304L stainless steel	S30403	ASTM A312/A312M

NOTES:

[1/] Unified Numbering System (in accordance with ASTM E527).

[2/] Copper-Nickel.

TABLE II. Maximum permissible corrosion rates for chemical cleaning products.

	90-10 CuNi	Welded 90-10 CuNi	70-30 CuNi	Bronze	304L Stainless
Mils/year	8	8	14	7	13

Downloaded from http://www.everyspec.com

5.3 Neutralizer. The neutralizing compound shall be capable of neutralizing the chemical cleaner specified (see 5.1). Neutralizer shall be prepared and provided at the supply pumping station in sufficient quantity to neutralize the volume of cleaning product prepared for the piping zone to be cleaned. A closed plastic container full of neutralizer (approximately 2 pounds of solid or 1 quart of concentrated liquid neutralizer) shall be placed in each sanitary space for the piping zone being cleaned and at the return pump station. A closed container of foam-forming neutralizer (soda ash, baking soda, etc.) shall also be placed at the location where the strength of the cleaning chemical is tested (see 5.15.4).

5.4 Defoamer. When the neutralizer is a foam-forming type (soda ash, baking soda, etc.), defoaming agents shall be used to control foaming caused by the reaction between the sewage piping scale and cleaning solution, and between the neutralizer and partially spent cleaning solution to be disposed of. Defoamer shall be located at the supply pumping station, at the sewage tank for Type A cleanings, and in all affected spaces where foaming can overflow.

5.5 Equipment. The following minimum equipment for chemical cleaning shall be provided.

5.5.1 Personal protective equipment (PPE). Personal protective equipment requirements are detailed in 5.7b, 5.7c, and 5.7s.

5.5.2 Auxiliary equipment. Auxiliary equipment shall include temporary ventilation equipment (see 5.7n) as required, auxiliary lighting as required, backflow preventer with cut-out valve if freshwater is used, multiplex communication equipment (independent of the shipboard communication system), spill clean-up and leak containment equipment (e.g., buckets, mops, rags, water hoses, wet/dry vacuum cleaner, polyethylene sheets, trash bags, rubber couplings, leak repair compound, overpack drums, spill pigs, etc.), assorted non-sparking tools (if necessary to remove pipe components and repair chemical cleaning equipment), and replacement consumable parts (flange gaskets, nuts and bolts, and anodes for Type A system tanks).

5.5.3 Basic equipment. The minimum basic equipment for chemical cleaning shall consist of supply pump, return pump, calibrated chemical tanks, mixing equipment, strainers, connecting hoses, valves, manifolds, gauges, regulators, and controls. A single recirculating pump may be used for supply and return of the chemical solutions. The recirculation pump(s) shall be capable of pumping the cleaning and neutralizer solutions to the height required by the set-up. A backup recirculating pump shall be available to immediately complete the flush process without over-exposing the system to cleaning or neutralizer solutions should the original return pump fail. The chemical tank(s) shall be of sufficient size to contain all chemical solution(s) to be introduced into the piping being cleaned.

5.5.4 Special interzone piping manifolds. In some Type B piping systems, certain sanitary fixtures are capable of draining to more than one piping zone or sewage tank via interzone piping. This interzone piping may run extended distances on the same side of the ship (forward/aft) or may cross over to the other side of the ship (port/starboard crossover). In addition, it may be capable of draining to more than one sewage tank. Special valved manifolds shall be temporarily installed in the ship's interzone piping to prevent cleaning chemical solution from flowing into the piping of a zone(s) not being cleaned or into an on-line sewage tank, and to allow for cleaning interzone and crossover piping. After completion of cleaning operations, these manifolds shall be removed and the interzone piping restored to its original configuration.

5.5.5 Test and monitoring equipment. At a minimum, the following test and monitoring equipment, calibrated as required, shall be provided:

a. Ultrasonic thickness (UT) test apparatus.

b. Flexible borescope with video recording equipment capable of inspecting the sewage piping system at least ten (10) feet and two (2) 90-degree elbows beyond the borescope entry point.

c. pH meter.

d. Chemical test kit for checking acid concentration.

e. Test equipment for confined space certification requirements.

Downloaded from http://www.everyspec.com

5.6 Personnel. Three or more qualified people shall be required to perform chemical cleaning evolutions. This is to ensure the safety of the personnel performing the cleaning and that of the ship's crew, visitors, shipyard workers, etc., as applicable. Monitoring of the following is required once chemicals have been introduced into the system:

a. Affected sanitary spaces.

b. Chemical reservoir(s) and other related equipment.

c. Chemical return pumping station.

d. Sewage piping being cleaned and the temporary recirculating loop apparatus (plastic fittings, manifolds, valves, hoses, etc.).

5.7 Safety and health precautions. The following safety and health precautions shall be met during chemical cleaning:

a. Sanitary and hygienic procedures of S9086-T8-STM-010/593 shall be accomplished.

b. Personnel shall use appropriate PPE for the eyes, face, extremities, torso, and respiratory system whenever working at or near a hazardous operation in accordance with OPNAVINST 5100.23 and 29 CFR 1915.

c. Personnel involved in chemical cleaning procedures shall wear long sleeve coveralls, chemical resistant safety goggles, and rubber gloves, as required. Safety shoes shall always be worn. Disposable rubber boots shall be worn if the person must step on spilled cleaning chemical or neutralizing compound when handling a spill. When handling a spill (e.g., overhead leak), personnel shall wear a face mask and a rain suit.

d. Personnel shall not eat, drink, or smoke during the chemical cleaning.

e. Personnel shall wash hands, exposed parts of arms, and face thoroughly with soap and water or full strength surgical detergent after finishing chemical cleaning operations and always before eating, drinking, or smoking.

f. Any personnel experiencing skin contact with cleaning chemical or neutralizing compound shall flush affected areas with plenty of freshwater. In the event of eye contact, flush with water for at least 15 minutes, lifting upper and lower eyelids, and seek immediate medical attention. Any other indications in the emergency and first aid procedures section of the chemical Safety Data Sheet (SDS) shall also be observed.

g. Neutralizing compound shall be kept in all affected sanitary spaces, and at the supply and return pumping stations in case of cleaning solution spills (see 5.3).

h. If cleaning solution or neutralizer are spilled, they may be vacuumed or swept up and reused during the cleaning process. Otherwise, they shall be swept up, neutralized, washed with water, and swept again until completely removed. The neutralized leakage shall be stored in a covered or sealed container for later disposal as a hazardous waste.

i. The chemical cleaning work shall be coordinated through the ship's Chief Engineer (CHENG) or his designated representative or the safety representative at the naval/industrial activity to ensure proper cleaning equipment set-up and provide adequate protection for personnel from chemical hazards.

j. Warning signs stating "NO WELDING", "NO EATING, DRINKING, OR SMOKING", and "NO BURNING" shall be posted at the chemical reservoir and any compartment where the cleaning chemical or the neutralizing compound are being used. These signs shall remain posted throughout the chemical cleaning evolution and until all traces of the cleaning chemical and neutralizing compound have been removed by neutralization and flushing with freshwater.

k. There shall be no welding or grounding of electric welding equipment on the affected sewage piping system during the chemical cleaning.

l. Non-sparking tools and safety spark-proof lights shall be used if it becomes necessary to work on the piping system before the cleaning chemical is neutralized. All cleaning chemical shall be drained from the piping before any work is done.

m. Hoses used in the chemical cleaning shall be inspected for damage and hydrostatically tested at their design pressure before use. A water-resistant sticker shall be affixed to each hose stipulating the test date and results. All hoses used in the cleaning shall be acid resistant.

Downloaded from http://www.everyspec.com

n. If chemicals are being openly handled inside the ship, negative pressure ventilation of at least 0.25 inch water gauge, either via the ship's ventilation system or temporary ventilation/exhaust ducts discharging to the weather, shall be maintained in the space where the chemicals are being handled. Negative pressure ventilation shall be maintained in the sewage pump rooms via the ship's ventilation system or temporary ventilation/exhaust ducts discharging to the weather if the sewage tank or any sewage system component containing cleaning solution/neutralizing compound is open to the sewage plant.

o. Sewage spills shall be flushed down a water closet not affected by the on-going chemical cleaning or stored in a closed container for later disposal in accordance with local regulations. A tag warning personnel of the contents of the container shall be placed on the container. The affected area shall be immediately cleaned and disinfected.

p. All other applicable safety and health precautions recommended by the manufacturer of the chemicals used in the cleaning, and those specified in the chemicals' SDSs shall be complied with.

q. Sewage system piping and holding tanks are considered Immediately Dangerous to Life and Health (IDLH) areas in accordance with 29 CFR 1915 and NFPA 306. Permission to open any sewage system tank or sewage piping shall be obtained from the ship's Commanding Officer, CHENG, or his designated representative in accordance with Navy IDLH requirements. Monitoring of sewage system tanks or piping shall be performed by an NFPA certified marine chemist in accordance with NAVSEA Standard Item 009-88. In special cases requiring gas free services from Ship's Force, monitoring shall be performed in accordance with S9086-CH-STM-030/074 and S9086-T8-STM-010/593.

r. While sewage system tanks or piping are open and until they are certified clean in accordance with 5.7s, the affected area shall be monitored (see 5.7q) for satisfactory levels of oxygen (19.5 to 22 percent), explosive gases (less than 10 percent of lower explosive limit), and hydrogen sulfide (less than 10 parts per million).

s. When opening any sanitary system tank or piping, respiratory personal protective equipment, such as self-contained breathing apparatus (air respirator equipped with an auxiliary escape canister) or hose mask with blower, shall be worn until sewage tanks or sewage piping located below the highest point of the sewage tank overflow piping have been certified gas free by an NFPA certified marine chemist and a gas free certificate issued in accordance with NAVSEA Standard Item 009-88. Gas free certification by Ship's Force, when required, shall be performed in accordance with S9086-CH-STM-030/074 and S9086-T8-STM-010/593.

t. Equipment installation shall be made to ensure all chemical leakage is contained in accordance with local, state, and Federal requirements. This should be accomplished by using containment at piping joints and cofferdams/secondary containment under process tanks, waste collection containers, and pumps. No spilled chemical shall be discharged to deck or storm drains, sewer systems, dry dock drains, or overboard.

5.8 Areas to be cleaned. The components of the sewage piping system to be cleaned shall include the following:

a. All urinal and water closet sewage collection piping (including any manifolds and any vacuum accumulators, heavy object traps, and high lift booster lift station piping for Type A systems).

b. All urinal and water closet headers.

c. All urinal traps and all tailpieces.

d. All interzone collection piping, when applicable (see 5.5.4).

5.9 Preliminary requirements. All preliminary requirements as provided below shall be followed in preparation for the chemical cleaning.

5.9.1 Process accomplishment and control. All work necessary to accomplish and control the chemical cleaning shall comply with the general criteria and requirements of NAVSEA Standard Items 009-01 and 009-09.

5.9.2 Operational requirement. Whenever practical, at least one sewage system shall be maintained operational at all times throughout the cleaning if more than one system exists.

5.9.3 Ship survey. A preliminary ship survey shall be conducted to obtain information necessary for planning of the sewage piping system cleaning and review applicable ship's sewage system drawings and diagrams.

Downloaded from http://www.everyspec.com

5.9.4 Ship's force and contracting activity briefings. Prior to the start of the chemical cleaning, the ship's CHENG or his designated representative shall be briefed on the cleaning procedure as specified (see 6.2). After cleaning begins, daily briefings shall be as specified (see 5.16.2 and 6.2).

5.9.5 Ship's force cooperation. Ship's Force shall secure sewage tanks, valves, spaces, electrical controls, or equipment; perform valve lineups; attach system tags; apply lockwires, etc., for effluent (flush water) transfer operations, sewage pipe cleaning, and component isolation; and witness sewage system operation check. Ship's Force shall not be responsible for replacing removed or damaged components, providing tools or equipment to the contractor, or any other services other than those stated herein.

5.9.6 Safety data sheets (SDS). The contractor shall keep at their chemical pumping stations a copy of the SDS for all chemicals that will be used during the chemical cleaning .

5.9.7 Multiplex communication. Multiplex communication shall be established between the affected sanitary space(s), the chemical solution pumping stations, and any other location affected by the chemical cleaning.

5.10 Job preparation. Preparation for the chemical cleaning shall be as provided below.

5.10.1 Interference removal. Interferences that prevent accomplishment of the required work shall be removed in accordance with NAVSEA Standard Item 009-23.

5.10.2 Lagging removal. All lagging shall be removed from the sewage piping system to be cleaned in accordance with NAVSEA Standard Item 009-10.

5.10.3 Securing sanitary spaces. A sign shall be posted on the entrance(s) to the affected sanitary space(s) to be cleaned, stating: "SECURED FOR CHEMICAL CLEANING."

5.10.4 Securing graywater sources. All graywater sources (showers, service sinks, garbage grinders, washbasins, etc.) that drain into the sewage piping system being cleaned shall be secured.

5.10.5 Sanitary system valve alignment and tag out. It shall be verified that the affected sewage plant is aligned for the automatic in-port mode and it shall be requested that Ship's Force tag out all valves in the sewage piping system being cleaned to route flow to the sewage tank in accordance with NAVSEA Standard Item 009-24.

5.10.6 Water flush and flow obstruction removal. Prior to gas freeing or chemical cleaning, each water closet and each urinal serviced by fixture is clogged or inoperative. If flow obstruction is within the sanitary fixture(s), each plugged/inoperative the piping designated for cleaning in 5.8 shall be flushed at least five times. For each water closet that does not drain, the rubber elbow/coupling between the fixture and drain line shall be removed. For each urinal that does not drain, the rubber hose from urinal tailpiece shall be removed. In addition, for Type A urinals that do not drain, the rubber elbow/coupling between urinal vacuum interface valve and vacuum drain shall be removed. It shall be determined whether the drain line is plugged or the sanitary water closet and urinal that does not drain shall be identified and reported to the ship's CHENG or his designated representative during the daily briefing (see 5.16.2) for remedial action by Ship's Force. If the flow obstruction is due to an inoperative high lift booster station for Type A systems, it shall be identified and reported to the ship's CHENG or his designated representative during the daily briefing for remedial action by Ship's Force. If flow obstruction is within the drain line, each blocked line shall be unplugged. If a sewage drain is totally plugged with foreign matter (plastic bag, rag, etc.), the piping shall be isolated, opened in accordance with gas free requirements specified herein, and the blockage removed. If the total blockage is a result of scaling, a hole shall be bored through the blockage using a plumbing snake via an appropriate cleanout or other suitable access. As an alternative, scaled urinal and water closet headers may be removed and cleaned manually or with the chemical product in 5.1. Headers that were removed shall be replaced with new or clean piping after zone cleaning is complete. Water supply to all water closets and urinals shall be shut off after flushing and removal of any obstructions. The flushing effluent can be discharged to the pier sewage connection by means of the sewage discharge pump(s). The pump(s) shall be set to automatic (AUTO).

5.10.7 Locating and repairing water leaks. The entire sewage piping system to be cleaned shall be inspected for water leakage. Where leaks are present, repairs shall be made in accordance with 5.13.2. Any spilled fluids shall be vacuumed up or otherwise cleaned and shall be disposed of in accordance with 5.7o.

Downloaded from http://www.everyspec.com

5.10.8 Manual cleaning of components. While inspecting the sewage piping to be cleaned, it shall be ensured that any section of piping which cannot be completely chemically cleaned, neutralized, and flushed with fresh water shall be cleaned manually (i.e., clean outs, urinal gravity drain piping for Type A systems, etc.).

5.10.9 Electrical equipment tag out. It shall be requested that Ship's Force tag out all electrical equipment affected by the chemical cleaning in accordance with NAVSEA Standard Item 009-24 and S9086-KC-STM-010/300. This includes tag out of any high lift booster stations control panels for Type A systems, where applicable.

5.11 Sewage piping inspections and tests. Inspection and testing of the sewage piping system shall be conducted before, during, and after chemical cleaning. The interior of the piping shall be inspected visually or, if not visible from the pipe end, using a borescope as specified herein. When a leak occurs or when specified (see 6.2), the wall thickness of the sewage piping shall be measured ultrasonically (see 5.11.3).

5.11.1 Visual inspections. The sewage piping shall be visually inspected before, during, and after the chemical cleaning. Visual inspections of the exterior of the sewage piping shall be accomplished every 2 hours during cleaning to identify leaking and obviously deteriorated areas. Visual inspections of the interior of the piping at pipe openings (cleanouts, borescope entry points, etc.) shall be made to estimate the degree of scale buildup.

5.11.2 Borescope inspections. Visual inspections of the interior of the piping (see 5.11.1) shall be supplemented with borescope inspections to ascertain the amount of scale buildup of the sewage piping downstream of the visual inspection points. The applicable header(s) and downstream and upstream piping via cleanouts shall be inspected with a borescope to the point where piping from another sanitary space located on a lower level intersects or the main ends at the sewage tank. Borescope inspections shall be accomplished at least every 4 hours. Borescope inspections shall be conducted every 2 hours if the visual inspection indicates that the piping is clean to minimize contact time between cleaning chemical and the sewage piping.

5.11.3 UT measurements. UT readings in accordance with T9074-AS-GIB-010/271 shall be taken each time a leak occurs during chemical cleaning operations (see 5.11.3.1). Additional UT readings shall be taken at selected locations (see 5.11.3.2) when specified (see 6.2). Personnel taking UT readings shall be compliant with the training and certification requirements of T9074-AS-GIB-010/271. Equipment used to take UT readings shall conform to the requirements of T9074-AS-GIB-010/271.

5.11.3.1 UT measurements for leaking piping. Once a sewage or chemical leak is found, UT readings shall be taken before starting or resuming chemical cleaning and prior to installing temporary piping repairs (soft patches, spool pieces, etc.). UT readings shall be taken at two equidistant points from where the leak occurred and within 6 inches in each direction from the leak. Also, if the leak was from a weld or fitting, UT readings shall be taken within ½ inch of welds and at the mid-point on the bottom of the fittings, where accessible. If the UT readings indicate that the thickness of the piping is above the minimum required for safe operation dictated by S9086-RK-STM-010/505, a temporary repair shall be installed (see 5.13.2 for sewage leaks and 5.13.3 for chemical leaks) and then chemical cleaning shall start/resume. Otherwise, follow-up UT readings shall be performed at 1-foot intervals in each direction from the initial UT readings as necessary to locate all unsafe piping upstream and downstream of the leak. Upstream and downstream UT readings shall continue to be taken as necessary beyond the unsafe piping until piping is located that has a thickness of at least 25 percent of that of a nominal new pipe of the same size and specification. If this section of piping is less than 18 inches, this piping section shall be soft patched. Otherwise, this section of piping shall be removed and one of the following repair methods shall be used prior to starting/resuming chemical cleaning of the affected zone: install a temporary spool piece, bypass (jumper around) this section of piping, or replace this piping (see 5.17.3.2) between the 25 percent nominal thickness locations. In no cases shall chemicals be introduced into unsafe piping once this piping is found. If the unsafe piping is bypassed, it shall be replaced after completion of the chemical cleaning (see 5.17.3.2).

Downloaded from http://www.everyspec.com

5.11.3.2 UT measurements for non-leaking piping (optional). When specified (see 6.2), additional UT readings shall be taken at selected locations prior to the chemical cleaning (see 5.11.4.4), every 24 hours of contact time between the cleaning chemical and the sewage piping after start of the cleaning (see 5.11.5.3), or at the end of the chemical cleaning of every piping zone (see 5.11.6.2), whichever occurs sooner. These readings shall be taken at various points on the bottom of the horizontal runs of the sewage piping system main lines within ½ inch of welds and fittings, when accessible. If the UT readings indicate that the thickness of the piping is above the minimum required for safe operation dictated by S9086-RK-STM-010/505, chemical cleaning shall start/resume. Otherwise, follow-up UT readings shall be performed at 1-foot intervals in each direction away from the initial UT readings as necessary to locate all unsafe piping. Upstream and downstream UT readings shall continue to be taken as necessary beyond the unsafe piping until piping is located that has a thickness of at least 25 percent of that of a nominal new pipe of the same size and specification. If this section of piping is less than 18 inches, this piping section shall be soft patched. Otherwise, this section of piping shall be removed and one of the following repair methods shall be used prior to starting/resuming chemical cleaning of the affected zone: install a temporary spool piece, bypass (jumper around) this section of piping, or replace this piping (see 5.17.3.2) between the 25 percent nominal thickness locations. In no case shall chemical be introduced into unsafe piping once this piping is found. If the unsafe piping is bypassed, it shall be replaced after completion of the chemical cleaning (see 5.17.3.2). Recommended guidelines for taking additional UT readings are as follows:

a. Main lines greater than or equal to 80 feet long: take five UT readings at approximate equidistant points.

b. Main lines less than 80 feet long but greater than or equal to 60 feet long: take four UT readings at approximate equidistant points.

c. Main lines less than 60 feet long but greater than or equal to 40 feet long: take three UT readings at approximate equidistant points.

d. Main lines less than 40 feet long but greater than or equal to 20 feet: take two UT readings at approximate equidistant points.

e. Main lines less than 20 feet long: take one UT reading at a point near midway the line.

5.11.4 Pre-chemical cleaning inspection. Prior to chemical cleaning, a pre-chemical cleaning inspection of the sewage piping system shall be performed to assess its condition and support planning of the chemical cleaning (i.e., discover leaks, expected cleaning time, amount of chemicals that will be needed, etc.).

5.11.4.1 Piping exterior inspection. Immediately following the water flush (see 5.10.6), the exterior of the piping to be cleaned shall be inspected for any signs of sewage leakage and obviously deteriorated areas which require repair.

5.11.4.2 Piping leak repair. All leaks discovered shall be repaired in accordance with 5.13.2.

5.11.4.3 Piping interior inspection. Prior to chemical cleaning, a visual inspection of the piping to be cleaned shall be conducted in accordance with 5.11.1. All inspection points and any actions taken shall be identified.

5.11.4.4 UT measurements (background). UT readings (see 5.11.3) shall be obtained each time a sewage leak is found during the pre-chemical cleaning inspection (see 5.11.4 and 5.11.4.1). When specified (see 6.2), additional UT readings shall be obtained (see 5.11.3) prior to the cleaning to establish background conditions for the sewage piping. Based on the results of the UT readings, action shall be taken as described in 5.11.3.1 for leaking piping or 5.11.3.2 for non-leaking piping.

5.11.5 In-process chemical cleaning inspections. In-process chemical cleaning inspections shall be conducted until the sewage piping is designated as “clean” (see 4.4). Sequencing of in-process inspections is provided on figure 1.

5.11.5.1 Piping exterior inspection. A roving patrol shall be maintained to continuously monitor the exterior of the piping for leakage throughout the chemical cleaning (see 5.13.1).

5.11.5.2 Piping interior inspection. The piping being cleaned shall be inspected visually in accordance with 5.11.1 and with borescope as required by 5.11.2 until the piping is designated as “clean” (see 4.4).

Downloaded from http://www.everyspec.com

5.11.5.3 UT measurements (in-process). UT readings shall be obtained each time a leak occurs during chemical cleaning operations in accordance with 5.11.3 and 5.11.3.1. When specified (see 6.2), additional UT readings of non-leaking piping shall be obtained in accordance with 5.11.3 and 5.11.3.2 if cleaning duration has reached 24 hours to determine if the chemical cleaning is causing accelerated corrosion. Based on the results of the UT readings, action shall be taken as described in 5.11.3.1 for leaking piping or 5.11.3.2 for non-leaking piping.

Downloaded from http://www.everyspec.com

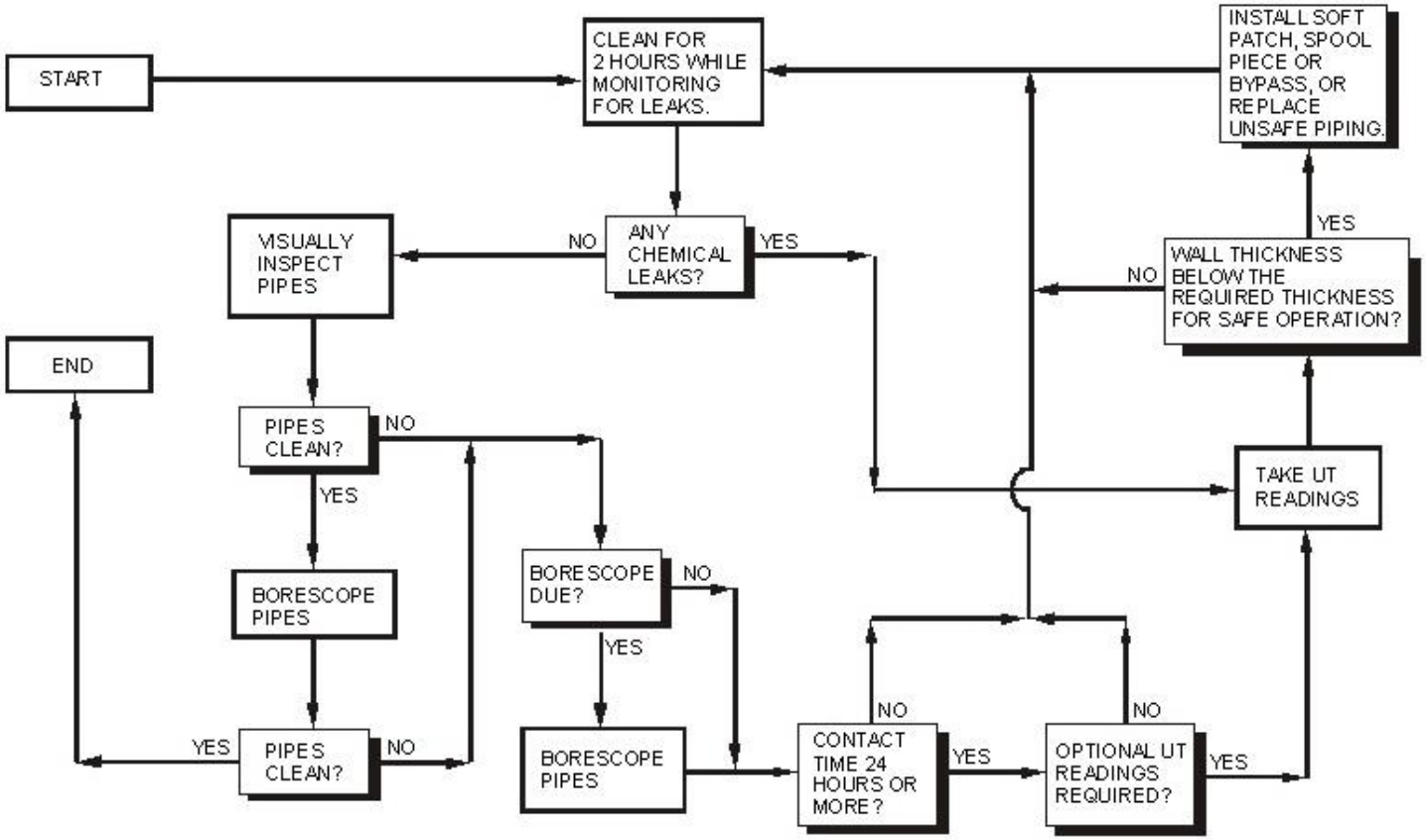

PIPE INSPECTION REQUIREMENTS:

1. VISUALLY INSPECT AT LEAST EVERY 2 HOURS
2. CONDUCT UT READINGS WHEN A CHEMICAL LEAK OCCURS AND EVERY 24 HOURS IF SPECIFIED BY CONTRACTING ACTIVITY
3. BORESCOPE EVERY 4 HOURS MINIMUM
4. BORESCOPE EVERY 2 HOURS WHEN VISUAL INSPECTION INDICATES CLEAN PIPE

FIGURE 1. Sequence of chemical cleaning inspections.

Downloaded from http://www.everyspec.com

5.11.6 Post-chemical cleaning inspection. Once the sewage piping system has been cleaned, neutralized, and water flushed, a post-chemical cleaning inspection of the piping shall be performed. The inspection shall be accomplished as soon as possible after the water flushing (see 5.16.9) so the piping system does not have to be reopened. The inspection shall be accomplished in the presence of the contracting activity representative and the CHENG or his designated representative. If the cleanliness of all sewage piping in the selected zone is acceptable (see 4.4), chemical cleaning of the sewage piping zone shall be considered complete.

5.11.6.1 Piping interior inspection. A visual and a borescopic inspection of the cleaned piping shall be conducted in accordance with 5.11.1 and 5.11.2, respectively. Video recording equipment shall be used to document the condition of selected sections of the sewage piping system. Inspection points shall include, in addition to any other specified by the contracting activity or the ship's CHENG or his authorized representative, the following:

a. One cleanout, where installed, in each urinal drain line.

b. Water closet cleanouts, where installed, downstream of the header in each applicable sanitary space.

c. At least one cleanout, where installed, in each line downstream of the intersection of the water closet and urinal drains.

d. All urinal headers.

e. At least one cleanout in each sewage main line.

f. Cleanout immediately downstream of upper and lower level check valves for each Type A high lift booster station.

g. Opening made available in vacuum distribution manifold (see 5.12.4.1e) for Type A systems.

h. Opening made available in sewage main closest to sewage tank (see 5.12.4.2b) for Type B systems (opening connected to return pump).

i. At least one opening made available in interzone piping (see 5.12.6), when applicable.

5.11.6.2 UT measurements (post-cleaning). When specified, after completing the chemical cleaning, UT readings (see 5.11.3) shall be obtained at the same locations where the previous readings were taken (see 6.2). These readings shall be used to determine if chemical cleaning has deteriorated other piping to an unsafe level besides the piping previously identified as unsafe during background (see 5.11.4.4) and in-process (see 5.11.5.3) inspections. If the UT measurements indicate that the thickness of the piping is below the required minimum for safe operation dictated in S9086-RK-STM-010/505, follow-up UT readings shall be performed at 1-foot intervals in each direction from the initial UT readings as necessary to locate all unsafe piping. Upstream and downstream UT readings shall continue to be taken beyond the unsafe piping until piping is located that has a thickness of at least 25 percent of that of a nominal new pipe of the same size and specification. The piping (see 5.17.3.2) between the 25 percent nominal thickness locations shall be replaced.

5.12 Equipment set-up. The following minimum equipment set-up requirements shall be followed.

5.12.1 Staging of material and equipment. The material and equipment (see 5.3, 5.4, and 5.5) required for cleaning the sewage piping system shall be staged.

5.12.2 Ventilation verification and installation. The ventilation system in the sewage pump room or space where return pump is to be located shall be operating properly (both mechanical supply and mechanical exhaust are functioning) and the compartment access open. Local exhaust ventilation to be used at system opening shall be installed.

5.12.3 Supply pumping station set-up. The supply pumping stations shall be set up, including the applicable basic equipment in 5.5.3, and all required temporary services in 4.3 shall be connected.

5.12.4 Return pumping station set-up. The return pumping stations shall be set up, including the applicable basic equipment in 5.5.3, and all required temporary services in 4.3 shall be connected. The return pump suction for Type A or Type B sewage piping systems shall be connected in accordance with 5.12.4.1 or 5.12.4.2, respectively.

Downloaded from http://www.everyspec.com

5.12.4.1 Type A sewage piping systems.

a. Any sewage tank constructed of aluminum or glass reinforced plastic (GRP) shall be isolated from the chemical cleaning process for Type A sewage piping cleanings. Otherwise, use of the sewage tank during chemical cleaning of Type A sewage piping systems is allowable provided the tank is a collection and holding tank and not part of a treatment system. For treatment systems, the sewage collection tank shall be isolated from the chemical cleaning process for sewage piping cleanings.

b. All safety precautions in S9086-T8-STM-010/593 shall be observed. Gas Free certification of the sewage tank shall be provided in accordance with NAVSEA Standard Item 009-88, or by Ship's Force when required in accordance with S9086-CH-STM-030/074 and S9086-T8-STM-010/593, sewage tank manway removed, and monitoring on tank opening immediately performed.

c. Sewage tank interior and all internal components shall be rinsed with freshwater. Residual fluids from bottom of the tank shall be vacuumed up or otherwise cleaned. Fluids may be flushed down a water closet not affected by the on-going chemical cleaning or stored in a closed container for later disposal in accordance with local regulations. A tag warning personnel of the contents of the container shall be placed on the container.

d. Sewage tank anodes and tank level sensors that are located below the bottom of the tank manway shall be removed. Level sensor opening(s) shall be sealed using either a blank flange or a suitable sealing device in accordance with the requirements of NAVSEA Standard Item 009-24.

e. Existing cleanout plug, discharge pump spool piece or suction valve, or other suitable fitting/valve located at the bottom of the sewage tank shall be removed. Suitable temporary valved hose assembly shall be connected between tank bottom opening and the return pump suction.

f. Isolation valve and components (check valve, ejector, etc.) between vacuum distribution manifold and tank or between vacuum distribution manifold and in-line vacuum pump suction shall be removed. For in-line systems, isolation valve and components (liquid seal tank, etc.) between vacuum pump discharge and tank shall also be removed. Suitable temporary valved hose assembly shall be connected between manifold and tank openings.

g. For Type A systems, the pressure sensing lines connected to the lower and upper level check valves for each high lift booster station shall be disconnected, check valves removed, and spool pieces installed in the openings. Also, the isolation valve on the air inlet assembly at the booster station's lower level shall be closed.

5.12.4.2 Type B sewage piping systems.

a. The sewage tank shall be isolated from the chemical cleaning process for Type B sewage piping cleanings.

b. All safety precautions in S9086-T8-STM-010/593 shall be observed and the sewage main isolation valve nearest the sewage tank through which all of the selected zone's piping drains shall be removed or the spectacle flange at the tank rotated to the closed position. Monitoring on sewage main openings shall be immediately performed and gas free certification provided in accordance with Standard Item 009-88 or by Ship's Force when required in accordance with S9086-CH-STM-030/074 and S9086-T8-STM-010/593. When applicable, the pipe opening nearest sewage tank shall be sealed using either a blank flange or a suitable sealing device in accordance with the requirements of NAVSEA Standard Item 009-24.

c. Suitable temporary valved hose assembly shall be connected between remaining pipe opening and the return pump suction.

5.12.5 Sanitary space set-up. All safety precautions in S9086-T8-STM-010/593 shall be observed for the removal of any component in the sewage piping system that is below the highest point of the sewage tank overflow piping. Gas free certification of this piping shall be provided in accordance with NAVSEA Standard Item 009-88 or by Ship's Force when required in accordance with S9086-CH-STM-030/074 and S9086-T8-STM-010/593. Temporary manifold(s), fittings, rigs, and assemblies shall be installed in all applicable sanitary spaces. Sanitary fixtures shall be disconnected or removed and urinal vacuum interface valves for Type A piping systems shall be removed as required. All sewage piping openings not being used for chemical cleaning shall be capped or plugged.

5.12.6 Interzone piping set-up. Temporary valved manifolds (see 5.5.4) shall be installed in suitable locations in each interzone piping main as required.

Downloaded from http://www.everyspec.com

5.12.7 Routing chemical cleaning hoses. Supply and return chemical cleaning hoses shall be routed between sanitary space manifolds and pumping stations as necessary to complete the chemical recirculation loop. Doors, hatches, and other openings through which the cleaning hose is routed shall be secured open.

5.12.8 Covering susceptible equipment and deck drains. Equipment within the areas of chemical cleaning shall be protected and covered. All urinals, water closets, wash basins, lockers, bunks, decks, electrical fixtures (excluding lighting fixtures), power panels, and other susceptible equipment shall be covered with polyethylene sheets, held in place with duct tape. Deck drains in all applicable sanitary spaces shall be covered with duct tape or any other suitable means to prevent any chemical spillage from entering the wastewater system.

5.13 Leakage handling. The contracting activity and the ship's CHENG or his authorized representative shall be informed of all leaks found during any phase of the cleaning.

5.13.1 Maintaining roving patrol. Once cleaning chemical solution or neutralizer is introduced into the sewage drain piping, a roving patrol shall be maintained to inspect for leakage throughout the cleaning process.

5.13.2 Sewage/water leaks. Any spilled fluids shall be vacuumed up or otherwise cleaned and shall be disposed of in accordance with 5.7o. In the event of a leak, UT readings and follow-on action in accordance with 5.11.3 and 5.11.3.1 shall be taken before installation of a temporary piping fix. If a minor leak (15 drops per minute or less) is discovered during the initial water flushing (see 5.10.6) or during the piping integrity tests (see 5.17.3.3), temporary repairs shall be made in accordance with S9086-RK-STM-010/505. In case of a larger leak (more than 15 drops per minute), the piping or joint shall be permanently repaired or replaced in accordance with S9086-RK-STM-010/505 (see 6.2), or by replacing the leaking section of piping with a chemical resistant spool piece, rubber couplings, and hose clamps. All welding and brazing shall be accomplished in accordance with the requirements of NAVSEA Standard Item 009-12. All temporarily fixed piping shall be permanently fixed or replaced after the chemical cleaning is finished.

5.13.3 Chemical leaks. In case of a chemical leak during cleaning or neutralization, chemical cleaning shall be immediately stopped, and liquid evacuated from the piping and then flushed with fresh water or seawater. Low pressure air or vacuum shall be used to completely evacuate any remaining liquid in the piping. UT readings and follow-on action in accordance with 5.11.3 and 5.11.3.1 shall then be taken. If a minor leak (15 drops per minute or less) is discovered, temporary repairs shall be made in accordance with S9086-RK-STM-010/505. In case of a larger leak (more than 15 drops per minute), temporary repairs shall be made to the piping or fitting in accordance with S9086-RK-STM-010/505 or it shall be replaced with a chemical resistant spool piece, rubber couplings, and hose clamps before proceeding. Any leakage shall be neutralized (if cleaning chemical is spilled liquid) and the waste stored in a covered or sealed container for later disposal as a hazardous waste. Mops and brooms shall be washed with fresh water and the washings collected as hazardous waste. A tag shall be placed warning personnel of the contents of the container. All leaking piping shall be permanently fixed or replaced after the cleaning is finished but prior to leaving the ship.

5.13.4 Piping repair testing. After repairing or replacing a leaking pipe or joint, the piping shall be tested in accordance with 5.17.3.3 to ensure the leak has been eliminated.

5.14 Establishing integrity of recirculation loop with water. When the chemical recirculation loop is completely assembled, it shall be demonstrated with freshwater that there are no leaks.

5.14.1 Recirculating with freshwater. The piping to be cleaned shall be filled with freshwater using the supply pump, noting the volume of water introduced into the sewage piping. The water shall be recirculated for a minimum of 10 minutes after return flow is steady.

5.14.2 Isolating and repairing leaks. The entire recirculation loop, including all sewage piping, pumps, hoses, and temporary fittings, manifolds, etc., shall be checked for leaks. All leaks shall be contained, cleaned up, and repaired in accordance with 5.7o. Piping repairs shall be tested in accordance with 5.17.3.3.

5.15 Testing and renewing chemical cleaning solution.

5.15.1 Maximum strength. During chemical cleaning operations, the cleaning chemical solution shall not be used at a strength greater than the strength at which acceptable corrosion test results were generated in accordance with 5.2.1.

Downloaded from http://www.everyspec.com

5.15.2 Minimum strength. During chemical cleaning operations, the chemical solution shall be maintained at a minimum strength based on the test results obtained in 5.15.4 and 5.15.5.

5.15.3 Chemical solution sampling. During in-process visual inspections (see 5.11.1) or after a leaking pipe has been water flushed and repaired, a portion of the cleaning chemical solution shall be sampled to determine its relative strength.

5.15.4 Chemical solution testing. When testing the strength of the cleaning solution (see 5.15), a small amount of foam-forming neutralizer (soda ash, baking soda, etc.) shall be added to a portion of the test sample. If an immediate reaction is observed, as evidenced by rapid foam formation, the strength of the cleaning solution is acceptable. If there is no observable reaction or the reaction is marginal, the chemical cleaning solution shall be tested and renewed or replaced in accordance with 5.15.5.

5.15.5 Renewing or replacing chemical solution. If the acid concentration of the chemical solution drops below the minimum acceptable strength (see 5.15.2), the degree of scaling in the partially cleaned sewage piping zone shall be assessed based on in-process inspection results (see 5.11.5). More cleaning chemical concentrate shall be added or a new batch prepared. In either case, the cleaning solution shall not exceed the maximum strength limitation in 5.15.1. If a new solution is prepared, the partially spent solution shall be neutralized and wastewater disposed of in accordance with 5.17.2.

5.16 Chemical cleaning procedures. Cleaning of the sewage piping system listed in 5.8 shall be accomplished using applicable ship's class drawings and hydroblast planning documents for guidance.

5.16.1 Preliminary. The following shall be performed prior to introducing chemicals into the sewage piping system to be cleaned:

a. Perform all preliminary requirements detailed in 5.9.

b. Brief the ship's CHENG or his designated representative on the cleaning procedure, and advise at least 1 day in advance which piping zones, spaces and equipment, or systems will need to be accessed, secured, or tagged out, and for how long, and the order in which the zones will be cleaned.

c. Prepare and water flush sewage piping to be cleaned in accordance with the requirements of 5.10.

d. Conduct a pre-cleaning inspection in accordance with 5.11.4.

e. Set up all required cleaning equipment and prepare applicable spaces in accordance with 5.12.

f. Establish the integrity of the recirculation loop with water for the sewage piping zone to be cleaned in accordance with 5.14.

g. Prepare the chemical cleaning solution in accordance with 5.15.1 and 5.15.2.

h. Begin the roving patrol and prepare for chemical leakage handling in accordance with 5.13.

5.16.2 Daily briefing. Daily briefings shall be provided to the contracting activity representative and the ship's CHENG or his designated representative as specified (see 6.2).

5.16.3 Chemically cleaning piping system. The following major steps shall be accomplished during the chemical cleaning. Supplemental steps may be added at the discretion of the contracting activity (see 6.2).

a. Fill the piping system with the cleaning chemical specified in 5.1.

b. Recirculate the cleaning solution continuously or intermittently (e.g., 30 minutes recirculation and 30 minutes stagnant soak) for a minimum of 2 hours. Visually inspect piping (see 5.11.1) and perform borescope inspection if piping appears clean (see 5.11.2). Continue cleaning until the piping is designated as clean (see 4.4) or until the piping is corroded to the degree that warrants discontinuing of the cleaning (see 5.11.5.3).

c. Conduct in-process inspections throughout the duration of the cleaning process in accordance with 5.11.5. Any foreign objects found during the inspection shall be removed from the piping if possible through inspection openings. If this is not possible, the location of all foreign objects still in the piping shall be noted and the foreign objects removed after completion of the cleaning process during system restoration (see 5.17.3.2).

Downloaded from http://www.everyspec.com

5.16.4 Evacuating partially spent cleaning solution. Any remaining cleaning chemical liquid in the piping and the sewage tank of Type A systems shall be completely evacuated. The remaining liquid in the piping shall be evacuated using low pressure air or vacuum. The re-usability of the cleaning chemical solution shall be determined. If the cleaning solution cannot be re-used, it shall be neutralized and disposed of in accordance with 5.16.5.

5.16.5 Neutralizing and transferring cleaning solution. The neutralizer specified in 5.3 shall be used to neutralize the partially spent chemical cleaning solution evacuated in 5.16.4. While neutralizing the cleaning solution, foaming in the neutralizer tank shall be monitored when a foam-forming neutralizer is used. Foaming shall be controlled using the defoaming agent specified in 5.4. The neutralized liquid shall be transferred to the receiving facility and disposed of in accordance with 5.17.2. Transfer operations must comply with all applicable local, state, and Federal regulations.

5.16.6 Neutralizing sewage piping system. While neutralizing the residual chemical cleaning solution in the sewage piping system, solution pH and foaming in the recirculation tank shall be monitored when a foam-forming neutralizer is used. Foaming shall be controlled using the defoaming agent specified in 5.4. The neutralizer solution shall be recirculated for a minimum of 10 minutes after the solution is neutral (pH between 6.0 and 8.0).

5.16.7 Evacuating neutralizer solution. The neutralizer solution shall be evacuated from the piping system and from the sewage tank when used for Type A systems. Any remaining liquid in the piping shall be completely evacuated using low pressure air or vacuum.

5.16.8 Neutralizing and transferring neutralizer solution. The chemical cleaner specified in 5.1 shall be used to neutralize the neutralizer solution evacuated in 5.16.7. The neutralized liquid shall be transferred to the receiving facility and disposed of in accordance with 5.17.2. Transfer operations must comply with all applicable local, state, and Federal regulations.

5.16.9 Piping system water flush. The sewage piping system shall be flushed by recirculating freshwater for a minimum of 10 minutes.

5.16.10 Evacuating flush water solution. The flush water solution shall be evacuated from the piping system and from the sewage tank when used for Type A systems. Any remaining liquid in the piping shall be completely evacuated using low pressure air or vacuum.

5.16.11 Transferring flush water solution. The flush water evacuated in 5.16.10 shall be transferred to the receiving facility and disposed of in accordance with 5.17.2. Transfer operations must comply with all applicable local, state, and Federal regulations.

5.17 Post-chemical cleaning requirements. The following shall be performed after chemical cleaning has been completed.

5.17.1 Post-chemical cleaning inspection. The post-chemical cleaning inspection shall be performed in accordance with 5.11.6.

5.17.2 Disposing of wastewater. When specified (see 6.2), a statement of wastewater disposal shall be provided.

5.17.3 Restoring sewage piping and sewage systems to operational condition. The sewage piping and sewage system shall be restored to operational condition after the chemical cleaning as indicated below.

5.17.3.1 Repairing/replacing valves and flanges. Isolation, check, or diverter valves found defective during the cleaning process shall be repaired or replaced in accordance with procedures approved by NAVSEA. All piping flanges exposed by removal of piping system components shall be cleaned, inspected, and repaired as required. Repairs shall be made by removing high spots, burrs, abrasions, and foreign matter, where removal can be accomplished by hand tools. Use new gaskets and fasteners if excessively degraded.

Downloaded from http://www.everyspec.com

5.17.3.2 Repairing/replacing temporary and deteriorated piping, and removing foreign objects. All temporary equipment, all temporary sewage drain piping fixes and bypasses (soft patches, spool pieces, and jumpers), and all deteriorated piping identified in 5.11.3.1, 5.11.3.2, and 5.11.6.2 shall be removed from the ship's sewage piping system. Deteriorated piping shall be replaced between the points where the upstream and downstream UT readings indicate that the pipe wall thickness is at least 25 percent of that of a nominal new pipe of the same size and specification (see 5.11.3.1 and 5.11.3.2). Sections of piping where foreign objects are still present (see 5.16.3c) shall also be removed and the objects removed. All openings (see 6.2) shall be hard plumbed in accordance with procedures approved by NAVSEA. All welding and brazing shall be accomplished in accordance with the requirements of NAVSEA Standard Item 009-12. To ensure leaking pipes or joints have been fixed, test repaired piping in accordance with 5.17.3.3.

5.17.3.3 Testing integrity of piping. The ship's sewage piping system shall be tested following cleaning and as required herein to determine the integrity of the piping for Type A or Type B systems in accordance with 5.17.3.3.1 or 5.17.3.3.2, respectively. Tests shall be performed in accordance with NAVSEA Standard Item 009-71.

5.17.3.3.1 Type A system piping test. A hydrostatic test of vacuum sewage piping shall be accomplished in accordance with the requirements of NAVSEA Standard Item 009-71. No leakage shall be allowed.

5.17.3.3.2 Type B system piping test. A "static" water test of sewage gravity drain piping shall be accomplished if vent piping and any piping common to waste drain piping can feasibly be isolated from the sewage drain piping. An "operational" test of sewage gravity drain piping shall be accomplished if vent piping and any piping common to waste drain piping cannot feasibly be isolated from the sewage drain piping. "Static" and "operational" tests shall be performed in accordance with the requirements of NAVSEA Standard Item 009-71. No leakage shall be allowed.

5.17.3.4 Cleaning and painting piping. Newly installed piping or fittings shall be cleaned and painted in accordance with the requirements of NAVSEA Standard Item 009-32.

5.17.3.5 Replacing lagging. All lagging that was removed prior to chemical cleaning shall be replaced in accordance with the requirements of NAVSEA Standard Item 009-11.

5.17.3.6 Replacing interferences. Any interferences that were removed to accomplish the required work shall be replaced in accordance with NAVSEA Standard Item 009-23.

5.17.3.7 Uninstalling and removing supply pumping station. The supply pumping station shall be uninstalled including removing all applicable basic equipment in 5.5.3 and disconnecting all required temporary services in 4.3.

5.17.3.8 Uninstalling and removing return pumping station. The return pumping stations shall be uninstalled including removing all applicable basic equipment in 5.5.3 and disconnecting all required temporary services in 4.3. The return pump suction for Type A or Type B sewage piping systems shall be disconnected in accordance with 5.17.3.8.1 or 5.17.3.8.2, respectively.

5.17.3.8.1 Type A sewage piping systems. When replacing sewage system components, new gaskets and fasteners shall be used if excessively degraded.

a. The temporary valved hose assembly between the vacuum distribution manifold and tank openings or between the vacuum distribution manifold and in-line vacuum pump suction shall be disconnected and removed. The isolation valve and components removed for cleaning (check valve, ejector, etc.) shall be replaced between the vacuum distribution manifold and tank or between the vacuum distribution manifold and in-line vacuum pump suction. For in-line systems, the isolation valve and components (liquid seal tank, etc.) between the vacuum pump discharge and tank shall also be replaced.

b. The lower and upper level check valves for each high lift booster station shall be reinstalled and the sensing lines reconnected. Also, the isolation valve on the air inlet assembly at the booster station's lower level shall be opened.

c. The temporary valved hose assembly between the tank bottom opening and the return pump suction shall be disconnected and removed. The cleanout plug, discharge pump spool piece or suction valve, or other fitting/valve located at the bottom of the sewage tank that was removed for cleaning shall be replaced.

Downloaded from http://www.everyspec.com

d. If sewage tank anodes are excessively degraded, new anodes shall be installed, and any tank level sensors that were removed prior to chemical cleaning shall be reinstalled.

e. The tank manway shall be reinstalled.

5.17.3.8.2 Type B sewage piping systems. The spectacle shall be rotated to the open position or the blank flange, or the other sealing device shall be removed from the pipe opening nearest the sewage tank. The temporary valved hose assembly between the sewage main and return pump shall be disconnected and removed. The sewage main isolation valve shall be reinstalled. New flange gaskets and fasteners shall be used if excessively degraded.

5.17.3.9 Restoring sanitary and other affected spaces. All temporary manifold(s), fittings, rigs, and assemblies shall be deinstalled and removed from all applicable sanitary spaces or other affected spaces. Water supply to all affected sanitary fixtures shall be reinstalled and restored, and tags from sanitary spaces shall be removed. Duct tape shall be removed from deck drains and coverings from the ship's equipment shall be removed in all applicable spaces.

5.17.3.10 Opening graywater sources. All graywater sources (showers, service sinks, garbage grinders, washbasins, etc.) previously secured for chemical cleaning shall be opened.

5.17.3.11 Removing chemical cleaning hoses. Chemical cleaning hoses connected to sanitary space manifolds and pumping stations shall be removed. Doors, hatches, and other openings shall be returned to original positions.

5.17.3.12 Removing tags from electrical equipment. It shall be requested that Ship's Force remove tags from all electrical equipment affected by the chemical cleaning in accordance with NAVSEA Standard Item 009-24 and S9086-KC-STM-010/300.

5.17.3.13 Aligning and removing tags from sanitary system valves. It shall be verified that the affected sewage plant is aligned for the automatic in-port mode and it shall be requested that Ship's Force remove tags from all valves in the sewage piping system just cleaned in accordance with NAVSEA Standard Item 009-24.

5.17.4 Conducting operational test of sewage system. An operational test shall be performed of all removed fixtures that were operational prior to the chemical cleaning. Discrepancies, if any, shall be corrected until the sewage system has been returned to proper operational condition or to its original operating condition.

6. NOTES

(This section contains information of a general or explanatory nature that may be helpful, but is not mandatory.)

6.1 Intended use. This standard practice is intended to be used to chemically remove scale accumulations from Navy surface ship sewage piping systems. Chemical cleaning is to be accomplished pierside and is not intended for use by Ship's Force. Deviations from this standard practice, whether based on extenuating circumstances or good engineering judgment, should be submitted to the contracting activity representative for approval prior to the start or continuation, if already started, of the chemical cleaning.

6.2 Acquisition requirements. Acquisition documents should specify the following:

a. Title, number, and date of this standard.

b. A process flow diagram of the chemical cleaning process submitted showing all inspection and UT measurement points, and quantitatively describing all ship interfaces and support services required.

c. Whether or not the shipyard/pier will furnish support services including electrical power, freshwater, seawater, low pressure compressed air, ventilation, crane services, etc. (see 4.3).

d. Cleaning procedure briefings (see 5.9.4, 5.16.2, and 6.3).

e. The minimum number of locations (see 5.11.3.2 and 5.11.4.4) that ultrasonic test measurements for sewage piping wall thickness should be taken, exclusive of those required after a leak has occurred (see 5.11 and 5.11.3). For background in-process and post-chemical cleaning UT readings, see 5.11.4.4, 5.11.5.3, and 5.11.6.2, respectively.

f. The minimum length of sewage piping and maximum number of fittings to be replaced (see 5.13.2 and 5.17.3.2).

Downloaded from http://www.everyspec.com

g. Supplemental steps required during the chemical cleaning (see 5.16.3).

h. Statement of wastewater disposal required (see 5.17.2 and 6.4).

i. Spill contingency plan.

6.3 Cleaning procedure briefing. The cleaning procedure should be prepared at least 24 hours in advance and should include what piping zones, spaces and equipment, or systems will need to be accessed, secured, or tagged out, and for how long, and the order in which the zones will be cleaned. Once cleaning has started, dialing briefings should be given (see 6.2).

6.4 Statement of wastewater disposal. All chemicals and chemical wastes used and generated during the chemical cleaning should be neutralized and disposed of according to applicable local, state, and Federal regulations. When required (see 6.2), a statement of wastewater disposal should be provided. The statement should describe the collection, neutralization, transport, and disposal of wastewater generated during the chemical cleaning. If a hazardous waste transporter or disposer was used, the name, address, phone number, and Environmental Protection Agency (EPA) and Department of Transportation (DOT) permit numbers of the transporter and disposer as well as a copy of all legal manifests should be included.

6.5 Subject term (key word) listing.

Corrosion

Graywater

Neutralizer

Scale

System, sanitary, waste

6.6 Changes from previous issue. Marginal notations are not used in this revision to identify changes with respect to the previous issue due to the extent of the changes.

Downloaded from http://www.everyspec.com

CONCLUDING MATERIAL

Custodians:
Army – AT
Navy – SH

Review activities:
Navy – YD
DLA – IS

Preparing activity:
Navy – SH
(Project 4630-2013-001)

NOTE: The activities listed above were interested in this document as of the date of this document. Since organizations and responsibilities can change, you should verify the currency of the information above using the ASSIST Online database at https://assist.dla.mil.