Downloaded from http://www.everyspec.com

NOT MEASUREMENT SENSITIVE

MI-STD-3001-7A(AS)
10 October 2014
SUPERSEDING
MIL-STD-3001-7(AS)
15 May 2001

DEPARTMENT OF DEFENSE STANDARD PRACTICE

DIGITAL TECHNICAL INFORMATION FOR MULTI-OUTPUT PRESENTATION OF TECHNICAL MANUALS

PERIODIC MAINTENANCE REQUIREMENTS
(PART 7 OF 8 PARTS)

AMSC AREA TMSS

DISTRIBUTION STATEMENT A. Approved for public release; distribution is unlimited.

Downloaded from http://www.everyspec.com

FOREWORD

1. This standard is approved for use by the Department of the Navy and is available for use by all Departments and Agencies of the Department of Defense.

2. This eight-part standard establishes the requirements needed to prepare digital technical information for multi-output presentation of NAVAIR work package (WP) Technical Manuals (TMs). The technical content and mandatory style and format requirements contained in this eight-part standard can be used to develop and assemble complete TMs for aircraft weapon systems, aeronautical equipment, airborne weapons/equipment, and support equipment WP TMs. The requirements are applicable for the output of printed paper and PDF screen displayed TMs. The requirements are also applicable for the display of Interactive Electronic Technical Manuals (IETMs) on any viewer that supports MIL-STD-3001-1.

3. MIL-STD-3001-7 is Part 7 of 8 parts and is incomplete without Parts 1 through 6 and Part 8. Part 7 establishes the technical content requirements for the preparation of periodic maintenance inspection requirements for aircraft weapon systems, quick engine change assemblies, powered aerial targets (missiles), support equipment, automatic test equipment, airborne armament equipment or special stores, powered surface targets, and aviation life support systems. This data can be used to develop TMs in a variety of output forms, including interactive screen presentations and page-based printed and PDF screen displayed TMs.

4. MIL-STD-3001-1 contains general preparation requirements for the multi-output presentation of NAVAIR WP TMs. MIL-STD-3001-2 through MIL-STD-3001-8 contain specific functional technical content requirements for the preparation of all NAVAIR WP TMs and revisions. Parts 1 through 8 are identified below:

MIL-STD-3001-1	Preparation of Digital Technical Information for Multi-output Presentation of Technical Manuals.
MIL-STD-3001-2	Description, Principles of Operation, and Operation Data.
MIL-STD-3001-3	Testing and Troubleshooting Procedures.
MIL-STD-3001-4	Maintenance Information with Illustrated Parts Breakdown (IPB).
MIL-STD-3001-5	Aircraft Wiring Information.
MIL-STD-3001-6	Structural Repair Information.
MIL-STD-3001-7	Periodic Maintenance Requirements.
MIL-STD-3001-8	Separate Illustrated Parts Breakdown (IPB).

5. Comments, suggestions, or questions on this document should be addressed to the Naval Air Systems Command (Commander, Naval Air Warfare Center Aircraft Division, Code 412000B120-3, Highway 547, Lakehurst, NJ 08733-5100) or emailed to michael.sikora@navy.mil. Since contact information can change, you may want to verify the currency of this address information using the ASSIST online database at https://assist.dla.mil.

Downloaded from http://www.everyspec.com

PARAGRAPH PAGE

FOREWORD ii
1. **SCOPE** 1
1.1 Scope 1
2. **APPLICABLE DOCUMENTS** 1
3. **DEFINITIONS** 1
4. **GENERAL REQUIREMENTS** 1
4.1 General 1
4.2 Selective application and tailoring 1
4.3 Preparation of digital data for electronic delivery 1
4.3.1 Use of the DTDs 2
4.4 Technical content 2
4.5 Style and format requirements 2
4.6 Standard tables and lists 2
4.7 Electrostatic discharge (ESD) sensitive equipment 2
4.8 Nuclear hardness 2
4.9 Ozone depleting substances (ODS) 2
4.10 Special processes 3
4.11 Illustrations and tables 3
5. **DETAILED REQUIREMENTS** 3
5.1 Preparation of periodic maintenance requirements <**pmrim**> 3
5.1.1 Aircraft card set <**acset**> 4
5.1.1.1 Periodic maintenance information card decks <**pmidk**> 4
5.1.1.2 Turnaround checklist <**turnchklst**> 4
5.1.1.3 Daily inspection card deck or daily inspection/servicing card deck <**dayinspdk**> 4
5.1.1.4 Special inspection card deck <**spinspdk**> 4
5.1.1.5 Preservation/depreservation card deck <**presdk**> 5
5.1.1.6 Conditional inspection card deck <**conddk**> 5
5.1.1.7 Phased maintenance card deck <**phmaintdk**> 6
5.1.1.7.1 Flight-hour inspections 6
5.1.1.7.2 Phase or calendar inspections 6
5.1.1.7.3 Phase inspection interval 6
5.1.1.7.4 Phase inspection structure 6
5.1.1.8 Zonal inspections 7
5.1.2 QECA card set <**qecaset**> 7
5.1.3 Airborne armament equipment (AAE)/special stores (SS) <**aaesset**> card set 7
5.1.3.1 Periodic maintenance information card deck <**pmidk**> 7
5.1.3.2 Daily/special cards<**dayinspdk**> 8
5.1.4 Support equipment (SE)/automatic test equipment (ATE) card set <**sseset**> 8
5.1.4.1 Preoperational checklist card deck (**for SE only**) <**preopdk**> 8
5.1.4.2 Daily inspection cards or daily inspection/servicing cards <**dayinspdk**> 8
5.1.4.3 Special inspection card deck <**spinspdk**> 9
5.1.4.4 Preservation/depreservation requirements card deck <**presdk**> 9
5.1.4.5 Conditional inspections card deck <**conddk**> 9
5.1.4.6 Calendar <**calendardk**> or start <**startdk**> maintenance requirements card decks 9
5.1.5 Powered aerial target (PAT) card set <**patset**> 10

Downloaded from http://www.everyspec.com

PARAGRAPH PAGE

5.1.5.1 Acceptance/initial buildup card deck <**acptbldupdk**>.....10
5.1.5.2 Prelaunch card deck <**prelnchdk**> 10
5.1.5.3 Postlaunch/servicing card deck <**postlnchdk**>.....10
5.1.6 Powered surface target (PST) card set <**pstset**>.....10
5.1.6.1 Preoperational checklist deck <**preopdk>**.....10
5.1.6.2 Periodic maintenance requirements card deck <**pmrdk**>.....10
5.1.7 Aviation life support systems (ALSS) card set <**alsset**> 11
5.1.7.1 Periodic maintenance requirements card deck <**pmrdk>**.....11
5.1.8 Airborne mine countermeasure (AMCM) equipment card set <**amcmset**>.....11
5.1.8.1 Periodic maintenance information card deck <**pmidk>** 11
5.1.8.2 Turnaround checklist **<turnchklst>** 11
5.1.8.3 Daily card deck **<dayinspdk>** 11
5.1.8.4 Special inspection card deck <**spinspdk**> 11
5.1.8.5 Preservation/Depreservation requirements card deck **<presdk>**.....12
5.1.8.6 Conditional inspections card deck <**conddk**> 12
5.1.8.7 Calendar <**calendardk**>, hour <**hourdk**>, or start <**startdk**> maintenance requirements card decks.....12
5.1.9 Unmanned aerial vehicle (UAV) card set **<uavset**>.....13
5.1.9.1 Periodic maintenance information card deck <**pmidk>** 13
5.1.9.2 Turnaround checklist **<turnchlst>** 13
5.1.9.3 Daily inspection card deck or daily inspection/servicing card deck **<dayinspdk>**.....13
5.1.9.4 Special inspection card deck <**spinspdk**> 14
5.1.9.5 Preservation/Depreservation requirements card deck **<presdk>**.....14
5.1.9.6 Conditional inspections card deck <**conddk**> 15
5.1.9.7 Calendar **<calendardk**>, hour <**hourdk**>, or start **<startdk**> maintenance requirements card decks.....15
5.2 Card types and arrangement.....15
5.2.1 Front matter cards <**fmcd**> 17
5.2.2 Introduction card <**introcd**> 17
5.2.2.1 Introduction card for periodic maintenance information card (PMIC) deck 17
5.2.2.2 Introduction card for AMCM or UAV PMIC decks.....18
5.2.3 Introduction and application statements card <**introaplcd**> 18
5.2.3.1 Turnaround checklist deck. 18
5.2.3.2 Preoperational checklist decks.....19
5.2.3.3 Aircraft daily card deck and special, preservation, and conditional card decks.....19
5.2.3.4 Calendar or phased maintenance requirements card deck 21
5.2.3.5 QECA maintenance requirements card deck 22
5.2.3.6 Airborne armament equipment or special stores daily/special card deck.....23
5.2.3.7 SE/ATE calendar or start/special/preservation/conditional card decks.....23
5.2.3.8 Aircraft peculiar support equipment (PSE) maintenance requirements card deck.....24
5.2.3.9 Powered aerial target (PAT) acceptance/initial buildup card deck.....24
5.2.3.10 Powered aerial target (PAT) prelaunch card deck 25
5.2.3.11 Powered aerial target (PAT) postlaunch card deck.....25
5.2.3.12 Powered surface target (PST) periodic card deck.....26
5.2.3.13 AMCM or UAV daily card deck.....26
5.2.3.14 AMCM or UAV calendar or start/special/preservation/conditional card decks.....27
5.2.3.15 ALSS maintenance requirements card deck <**alssintroaplcd**>.....27
5.2.3.15.1 ALSS maintenance requirements card applicable equipment list.....28

Downloaded from http://www.everyspec.com

PARAGRAPH PAGE

5.2.4 Definitions card <**defcd**> 28
5.2.5 Removal/replacement schedule and special tracking requirements card <**rrschtrkcd**> (**for periodic maintenance information card decks only**) 28
5.2.6 Inspection requirements index cards <**inspindcd**> (**for periodic maintenance information card decks only**) 29
5.2.7 Conditional inspection listing cards <**condinspcd**> (**for aircraft, AMCM, UAV periodic maintenance information card decks only**) 30
5.2.8 Phase change implementation card <**phchgcd**> (**for aircraft periodic maintenance information card decks only**) 30
5.2.9 Abbreviations and index cards <**abindxcd**> 30
5.2.10 Abbreviations, index, and checkflight requirements card <**abindxcd**> (**for phased maintenance card decks only**) 30
5.2.11 Special tools/support equipment list cards <**secd**> 31
5.2.12 Consumable maintenance material list cards <**consumcd**> 31
5.2.13 Replacement parts list cards <**rplcd**> 32
5.2.14 Work area <**wrkareacd**> cards or zone cards <**zonecd**> 32
5.2.15 Zone title and description cards <**zonetltcd**> (**for aircraft special/preservation/conditional and phased maintenance card decks only**) 32
5.2.16 Zonal inspection criteria card <**zoneinspcd**> (**for aircraft special/preservation/conditional and phased maintenance card decks only**) 33
5.2.17 Access panel cards <**accpnlcd**> 33
5.2.18 Antenna location cards <**antcd**> 33
5.2.19 Checklist task cards <**chklst**> 34
5.2.20 Phase sequence control cards <**phsccd**> (**for aircraft phased maintenance card decks only**) 34
5.2.21 QECA sequence control card(s) <**qecacd**> 34
5.2.22 Task cards <**tskcd**> 34
5.2.22.1 Preservation task card <**prestskcd**> requirements 36
5.2.22.2 Assist cards <**asstskcd**> 37
5.2.22.3 Lubrication task cards <**lubtskcd**> 37
5.2.23 Illustration cards <**illustcd**> 37
5.2.23.1 Lubrication illustration cards <**illustcd**> 38
5.2.24 QA cards <**qacd**> 38
5.2.25 Aircraft service period adjustment (ASPA) card <**aspacd**> (**Aircraft special inspection card deck only**) 39
5.3 Card forms and card field details 40
5.4 Card numbering 41
5.4.1 PMIC card decks 41
5.4.2 Turnaround and preoperational checklists 42
5.4.3 Daily, special, preservation, and conditional card decks 42
5.4.4 Phased maintenance requirements card deck 43
5.4.5 QECA deck 43
5.4.6 ALSS deck 43
5.4.7 Aircraft PSE deck 44
5.4.8 Added cards 44
5.4.9 Deleted cards 44
5.4.10 Renumbering 44

Downloaded from http://www.everyspec.com

PARAGRAPH PAGE

5.5 Changes and revisions 44
5.5.1 Changes 44
5.5.2 Revisions 44
6. **NOTES** 45

FIGURE PAGE

FIGURE 1. Example of prime and decimal card format. 46
FIGURE 2. Example of preface and illustration card format. 46
FIGURE 3. Example of an aircraft service period adjustment (ASPA) requirements card for aircraft 47
preparation. 47
FIGURE 4. Example of an aircraft service period adjustment (ASPA) requirement card for aircraft restoration. 47
FIGURE 5. Example of definitions card. 48
FIGURE 6. Example of a removal/replacement schedule and special tracking requirements card. 48
FIGURE 7. Example of an inspection requirement card. 50
FIGURE 8. Example of a conditional inspection listing card. 50
FIGURE 9. Example of a phase change implementation card. 51
FIGURE 10. Example of an abbreviations and index card for aircrew life support systems card deck. .. 51
FIGURE 11. Example of an abbreviations and index card for PSE card deck. 52
FIGURE 12. Example of an abbreviations, index, and checkflight requirement card for phased maintenance checklist. 52
FIGURE 13. Example of a special tools/support equipment card (or replacement parts card) for aircrew life support systems or QECA card deck. 53
FIGURE 14. Example of a special tools/support equipment card for support equipment card deck. 53
FIGURE 15. Example of a consumable maintenance material list card for aircrew life support systems or QECA card deck. 54
FIGURE 16. Example of a consumable maintenance material list card for aircraft phased maintenance requirements checklist. 54
FIGURE 17. Example of a consumable maintenance material list card for support equipment card deck. 55
FIGURE 18. Example of a replacement parts list card for phased maintenance checklist. 55
FIGURE 19. Example of a replacement parts list card for support equipment card decks. 56
FIGURE 20. Example of work area or zone cards. 56
FIGURE 21. Example of a zones card. 57
FIGURE 22. Example of a zone title and description card. 57

Downloaded from http://www.everyspec.com

FIGURE PAGE

FIGURE 23. Example of a zonal inspection criteria card. 58
FIGURE 24. Example of an access panel illustration card. 58
FIGURE 25. Example of an access panel matrix card..... 59
FIGURE 26. Example of an antenna location illustration card. 59
FIGURE 27. Example of a checklist task page..... 61
FIGURE 28. Example of a phase sequence control card..... 62
FIGURE 29. Example of a quick engine change assembly (QECA) sequence control card..... 62
FIGURE 30. Example of a task card. 63
FIGURE 31. Example of an assist card. 63
FIGURE 32. Example of a lubrication task card. 64
FIGURE 33. Example of a task card illustration. 64
FIGURE 34. Example of a lubrication illustration card. 65
FIGURE 35. Example of a lubrication symbols card. 65
FIGURE 36. Example of final and in-process quality assurance cards. 66

Downloaded from http://www.everyspec.com

1. **SCOPE**

1.1 Scope. This part of the standard establishes the technical content requirements for the preparation of periodic maintenance inspection requirements for aircraft weapon systems, quick engine change assemblies, powered aerial targets (missiles), support equipment, automatic test equipment, airborne armament equipment or special stores, powered surface targets, and aviation life support systems. This data can be used to develop periodic maintenance requirements card sets in a variety of output forms, including interactive screen presentations and printed maintenance work cards.

2. **APPLICABLE DOCUMENTS**.

2.1 The applicable documents in Section 2 of MIL-STD-3001-1 apply to this Part.

3. **DEFINITIONS**.

3.1 The definitions in Section 3 of MIL-STD-3001-1 apply to this Part.

4. **GENERAL REQUIREMENTS**.

4.1 General. Periodic maintenance requirements consist of a series of scheduled maintenance requirements that provide a basis for planning, scheduling, and execution of scheduled maintenance. The requirements shall be developed to provide general and specific instructions required to perform scheduled maintenance at the organizational and intermediate maintenance levels. Because these requirements are performed at specific intervals that are based upon calendar days, flight hours, operating hours, or other events that affect the equipment performance, the WP concept described in the other Parts of this standard does not apply. Periodic maintenance requirements shall be contained and subdivided into a series of periodic maintenance card sets.

4.2 Selective application and tailoring. This Part contains some requirements that may not be applicable to the preparation of all periodic maintenance cards sets. Selective application and tailoring of requirements contained in this Part shall be accomplished through the use of the TM Content Selection Matrixes contained in MIL-STD-3001-1, Appendix A. The applicability of some requirements is also designated by one of the following statements: unless specified otherwise by the requiring activity or as/when specified by the requiring activity.

4.3 Preparation of digital data for electronic delivery. Periodic maintenance requirements data prepared in maintenance task card format and delivered digitally in accordance with this standard shall be XML-tagged and assembled using the Document Type Definition (DTD). Refer to MIL-STD-3001-1 for information on obtaining or accessing this DTD. XML tags used in the DTD are noted throughout the text of this Part in bracketed, bold characters (e.g., **<acset>**) as a convenience for the TM author and to denote the appropriate tag to be used for this specific information when developing a document instance.

Downloaded from http://www.everyspec.com

4.3.1 Use of the DTDs. The modular DTDs referenced in this Part interpret the technical content and structure for the functional requirements contained in this Part and are mandatory for use.

4.4 Technical content. Technical content requirements contained in this Part are considered mandatory and are intended for compliance. The content structure for the technical data being developed shall conform to the associated modular Document Type Definition (DTD) for Periodic Maintenance Requirements.

4.5 Style and format requirements. For mandatory style and format requirements for the preparation of Periodic Maintenance Requirements maintenance card sets, refer to MIL-STD-3001-1, Appendix B. For style and format requirements for the on-screen display of IETMs, refer to NAVAIRINST 4120.11, Policy for Preparation and Standardization of NAVAIR Interactive Electronic Technical Manuals (IETMs).

4.6 Standard tables and lists. Standard tables and lists are noted throughout the text of this standard in bold and in parentheses (e.g., **(standard table)**, **(standard list)**). The structure and titles of the column headings for these standard tables and lists shall have no deviations.

4.7 Electrostatic discharge (ESD) sensitive equipment. If the electronic equipment to be handled, inspected, repaired, or assembled is ESD sensitive, the [ESD] icon (the acronym ESD enclosed in a box) and the symbol [ESD] shall be incorporated into the applicable tasks and procedures of the technical publications to ensure that ESD sensitive parts are not degraded during handling or operation. The [ESD] icon shall precede the procedure title. The specific step(s) in the procedure addressing handling or operation which could damage ESD sensitive parts shall be labeled by placing the symbol [ESD] between the step number and the text.

4.8 Nuclear hardness. If the weapon system/equipment to be operated, maintained or overhauled has nuclear survivability requirements (e.g., overpressure and burst, thermal radiation, electromagnetic pulse (EMP), or transient radiation effects on electronics (TREE)) applicable warnings and hardness critical processes (HCP) symbols shall be incorporated into the applicable tasks and procedures of the technical publications to ensure the hardness of the equipment is not degraded during handling or operation. Caution shall be taken not to include classified information in an unclassified publication. When entire paragraphs, including subparagraphs, are considered hardness critical, only major paragraphs shall be marked. The appropriate symbol [HCP], [HCI], [OCP], [OCI], [CSP], or [CSI] shall be placed between the paragraph number and title. When only certain processes/steps within a paragraph are hardness critical, only the applicable process/step shall be marked. The symbol [HCP], [HCI], [OCP], [OCI], [CSP], or [CSI] shall be placed between the step number and text. For definitions of the acronyms contained in this paragraph, refer to Section 3 of MIL-STD-3001-1.

4.9 Ozone depleting substances (ODS). The continued use of ODS has been prohibited by Executive Order 12856. Describing the use of ODS materials in NAVAIR manuals is prohibited. A list of these substances may be obtained from the requiring activity.

Downloaded from http://www.everyspec.com

4.10 Special processes. Information shall be included for any special process required under extreme environmental or operational conditions within the limits of the equipment.

4.11 Illustrations and tables. Illustrations and tables referenced in a task card shall be displayed on a separate card using the <**supportcd**> element.

5. DETAILED REQUIREMENTS

5.1 Preparation of periodic maintenance requirements <**pmrim**>. Periodic maintenance inspection requirements shall be developed and contained in sets of periodic maintenance information cards <**pmrcset**> to provide a basis for planning, scheduling, and execution of scheduled maintenance. Refer to 5.3 and see figures 1 and 2 for card forms and card field details; see figure 3 for a sample of a card form with completed fields. These cards shall be divided into the following specific card sets.

a. Aircraft <**acset**>.

b. Quick engine change assembly (QECA) <**qecaset**>.

c. Airborne armament equipment (AAE)/special stores (SS) <**aaesset**>.

d. Support equipment (SE)/automatic test equipment (ATE) <**sseset**>.

e. Powered aerial target (PAT) <**patset**>.

f. Powered surface target (PST) <**pstset**>.

g. Aviation life support systems (ALSS) <**alsset**>.

h. Airborne mine countermeasure (AMCM) equipment <**amcmset**>.

i. Unmanned aerial vehicle (UAV) <**uavset**>.

The Logistics Support Analysis (LSA) or the Logistics Management Information (LMI) is the overall systems engineering process for determining logistics support requirements for acquisition programs. An element of this process is maintenance planning and analysis (MPA) which develops, among other maintenance elements, preventive maintenance requirements. The contractor or preparing activity shall develop and document scheduled maintenance requirements from approved maintenance plans derived from the MPA process. Periodic maintenance requirements card sets for aircraft weapon systems, equipment, or support equipment not using the Reliability Centered Maintenance (RCM) concept shall be developed using existing data, such as 3M data, Naval Safety Center reports, engineering investigations, quality deficiency reports, etc.

Downloaded from http://www.everyspec.com

Note: In order to preclude inconsistencies between airframe and engine periodic maintenance requirements, coordination between the preparing activities shall be maintained throughout the life cycle of the airframe/engine.

5.1.1 Aircraft card set <**acset**>. The aircraft card set shall be subdivided into the specific types of information card decks described in 5.1.1.1 through 5.1.1.7.

5.1.1.1 Periodic maintenance information card decks <**pmidk**>. These periodic maintenance information card decks contain the introductory information relative to the aircraft's scheduled maintenance program. They include a schedule for items having an approved mandatory removal/replacement interval or special tracking requirements; a list, by system and card number, of the inspection requirements to be performed; a list, by system and card number, of those inspections which remain valid during Aircraft Battle Damage Repair (ABDR) reporting; and conditional inspection requirements to be accomplished after the occurrence of certain over-limit situations. The cards may also identify inspections necessary to avoid under inspection of critical systems during implementation of revised phased PMRC decks.

5.1.1.2 Turnaround checklist <**turnchklst**>. The cards for a turnaround checklist contain tasks consecutively numbered and sequentially arranged in a logical walkaround order. The requirements are those necessary to identify degradation that has occurred during flight. They consist of:

a. Inspections for obvious defects and integrity of the aircraft exterior and interior. Installed external airborne equipment and special stores shall be considered as part of the aircraft.

b. Checks to determine the need for servicing of fuels, oils, liquid oxygen, and the critical consumables expended during normal operation. Reference shall be made to the appropriate manual for servicing instructions. If servicing instructions are not available in another manual, they shall be included with the daily inspection cards and referenced. The title of the daily inspection cards shall be changed to read "Daily Inspection/Servicing Cards."

5.1.1.3 Daily inspection card deck or daily inspection/servicing card deck <**dayinspdk**>. The daily card deck shall contain the minimum daily maintenance requirements necessary to ensure the aircraft is safe for flight. The daily inspection card deck shall provide inspection requirements for defects at a greater depth than the turnaround checklist cards. The inspection shall be accomplished in a logical walkaround sequence (clockwise). If servicing instructions are not available in another manual, they shall be included with the daily inspection card deck. The title of the daily inspection card deck shall be changed to read “Daily Inspection/Servicing Cards.”

5.1.1.4 Special inspection card deck <**spinspdk**>. Requirements sensitive to the occurrence of a prescribed number of days, flight hours, operating hours, or cycles/events that are not compatible with phase inspection intervals shall appear on special inspection cards (e.g., 7, 14, or 21 days; 10, 35, or 75 hours; or 100 arrested landings). When assembling special cards, every effort shall be made to limit to eight hours elapsed maintenance time (EMT) the time required to perform any special inspection or combination of special inspections which, because of their intervals,

Downloaded from http://www.everyspec.com

become due simultaneously. Only one inspection cycle may be indicated in block 4, figure 1. The following detailed requirements apply:

a. Aviator's equipment/safety and survival systems. Certain aviator's equipment/safety and survival systems that require an ALSS card deck shall have only installation and removal requirements included in the special cards.

b. Corrosion inspection requirements. The corrosion inspection program for items that are predominantly calendar sensitive shall consist of special inspections based on a cumulative number of days. These requirements are to inspect corrosion-prone areas for degradation that may have occurred during the preceding inspection interval. Corrosion-prone area illustrations shall be provided where necessary for clarity. Corrosion inspection tasks shall be identified with the letter "C" in block 11, figure 1.

c. Engine removal/installation requirements. Engine removal/installation requirements (when required) shall be contained in the special cards by reference to the applicable maintenance manual (e.g., "remove engine in accordance with NAVAIR 01-XXX-X"). These cards shall list the total time required, consumable maintenance materials, and replacement parts needed to accomplish the removal or installation of the engine.

d. Engine bay area requirements. The inspection of equipment, components, and/or structures within the engine bay area that are practical only with the engine removed shall be programmed as special inspections at the same interval as the scheduled engine removal. The applicable cards shall contain the following: "NOTE: To be performed when the QECA is removed for scheduled inspection."

e. Installed engine requirements. All engine, propeller and quick engine change (QEC) maintenance requirements which are performed on the installed engine/QEC that do not have intervals compatible with those established in the phases shall be included as special inspections. All engine requirements included as special inspections shall be annotated in block 9 (see figure 1) with the word "engine" or "propeller," as applicable.

f. Aircraft service period adjustment (ASPA) requirements. When applicable, special inspection requirements shall be provided for preparation of the aircraft for ASPA evaluations and for restoration of the aircraft to a flight-ready condition upon completion of the inspection (see figures 3 and 4).

5.1.1.5 Preservation/depreservation card deck <**presdk**>. Preservation requirements shall be provided for the short term (six months maximum) preservation of aircraft. Preservation requirements for each aircraft system shall be addressed individually and shall include initial preservation procedures; scheduled maintenance is to be accomplished while each system is preserved. Depreservation procedures shall also be included (refer to 5.2.22.1).

5.1.1.6 Conditional inspection card deck <**conddk**>. Conditional inspections are those unscheduled inspections required to be accomplished because of the occurrence of a measurable

Downloaded from http://www.everyspec.com

abnormal operational event which exceeds the design limits of structural components or equipment and may compromise aircraft safety of flight. The exceeding of design limits shall be determined at the time of occurrence by predetermined measurement criteria (e.g., Gs, pressure, temperature, RPMs, weight, speed, or torque). The occurrence of defects to components or equipment while operating within designed operating parameters is not considered to be a candidate for conditional inspections. Precarrier/postcarrier inspection requirements are exceptions to these criteria and shall be listed as conditional inspections.

5.1.1.7 Phased maintenance card deck <**phmaintdk**>. The phased maintenance card deck is formulated by dividing the total applicable scheduled inspection requirements into phases which are performed at specified intervals and have approximately the same work content and elapsed maintenance time (EMT). This includes all QEC, propeller and engine requirements which are performed on the installed QECA. All QEC, propeller and engine requirements shall be identified in block 9, figure 1 with the word "Engine" or "Propeller" followed by the interval of the inspection. The number of phases is established after the scope of the total workload has been identified by maintenance engineering analysis. Through application of this concept, a portion of the total recurring inspection requirements is accomplished at each phase and the cycle shall be repeated after completion of the last phase.

5.1.1.7.1 Flight-hour inspections. If the majority of the scheduled maintenance requirements specified for a phase inspection cycle are flight-hour sensitive, the requirements shall be divided into phases based on flight hours.

5.1.1.7.2 Phase or calendar inspections. If the majority of the scheduled maintenance requirements specified for a phase inspection cycle are calendar sensitive, the requirements shall be divided into phases based on calendar time.

5.1.1.7.3 Phase inspection interval. Each phase shall be accomplished at equal flight-hour or calendar intervals. Scheduled flight-hour and calendar requirements shall not be intermixed in the same phase set of cards. Requirements not compatible with the phase interval shall be accomplished as special inspections.

5.1.1.7.4 Phase inspection structure. The following guidelines shall be followed in structuring each phase:

a. The amount of work to be accomplished by an inspection team shall be limited to eight hours or less of elapsed maintenance time (EMT).

b. When practical, divide each phase into approximately equal workloads.

c. Limit repetition of preparation requirements by giving special attention to equipment removal, access openings, use of support equipment (SE), engine operation, and check flight requirements.

d. Within time limitations, group requirements that are functionally related in the same phase.

Downloaded from http://www.everyspec.com

e. Group requirements so that they are compatible with the environment in which they should be performed (e.g., tasks requiring the aircraft to be on jacks) shall be put in the same phase.

f. When feasible, group requirements to be accomplished using external power sources.

g. Inspection requirements that are common to all phases shall be consolidated in one deck and shall be titled "Master deck." Inspection requirements that are performed on a specific phase only shall be titled "Supplemental deck." To perform the inspection, the master deck shall be issued along with the supplemental deck required for the specific phase.

5.1.1.8 Zonal inspections. Zonal inspections shall be a requirement of the daily/special/preservation/conditional and phased periodic maintenance requirements card decks (refer to 5.1.1.3 through 5.1.1.7) when the criteria of reliability centered maintenance (RCM) are met.

5.1.2 QECA card set <**qecaset**>. This card set shall contain all scheduled engine inspection requirements necessary to zero time the engine for inspection purposes. This includes requirements on the engine, Quick Engine Change Kit (QECK), Contractor Furnished Equipment (CFE), Government Furnished Equipment (GFE) and propellers, if applicable, for all aircraft models which utilize the particular engine mode. For multi-engine aircraft, the requirements applicable to a particular engine position are noted on the applicable card. Conditional inspections and zonal inspections shall not be a requirement of the QECA card set. As applied in this standard, the terms QEC, QECA, and QECK are defined as follows:

a. QEC (quick engine change). Requirements peculiar to a specific airframe for QECK items, GFE and CFE accessories, and for propellers, when applicable.

b. QECA (quick engine change assembly). A quick engine change kit completely assembled on a quick engine change stand with the engine and all GFE and CFE accessories installed, less the propeller.

c. QECK (quick engine change kit). A kit containing all items required for a QECA less GFE and CFE accessories, engine, and propeller.

5.1.3 Airborne armament equipment (AAE)/special stores (SS) <**aaesset**> card set. The airborne armament equipment/special stores card set shall be subdivided into the specific types of information card decks described in 5.1.3.1 and 5.1.3.2.

5.1.3.1 Periodic maintenance information card deck <**pmidk**>. The periodic maintenance information card deck contains the introductory information relative to the airborne armament equipment and special stores scheduled maintenance program. It includes a schedule for items having an approved mandatory removal/replacement interval and a list, by system and card number, of the inspection requirements to be performed.

Downloaded from http://www.everyspec.com

5.1.3.2 Daily/special cards<**dayinspdk**>. This card deck shall contain all scheduled maintenance requirements for airborne equipment or special stores that are not normally separated from the aircraft during flight. Items such as gun pods, multiple ejector racks/triple ejector racks, in-flight refueling stores, and electronic counter-measure pods fall into this category. The scheduled maintenance requirements are arranged in a logical sequence to ensure a thorough inspection of the equipment. The card deck contains the following:

a. Daily inspection. The daily inspection shall provide inspection requirements for uninstalled airborne armament equipment or special stores. The inspection shall be accomplished in a logical walkaround sequence. Inspections performed on installed airborne armament equipment or special stores shall be addressed in the applicable aircraft manual.

b. Special inspection. Special inspection requirements are tasks on installed or uninstalled airborne armament equipment or special stores which do not fit in the turnaround or daily requirements.

c. Operational checks. Justified operational checks shall not be included in this card set but shall be included in the appropriate aircraft manual.

d. Zonal inspection. Zonal inspections shall be a requirement of the daily/special card decks when the criterion of reliability centered maintenance (RCM) are met.

5.1.4 Support equipment (SE)/automatic test equipment (ATE) card set <**ssese**t>. The support equipment/automatic test equipment card set shall be subdivided into the specific types of information card decks described in 5.1.4.1 through 5.1.4.6. The requirements specified for this card set also apply to SE and ATE designated as peculiar support equipment (PSE), as applicable.

5.1.4.1 Preoperational checklist card deck (**for SE only**) <**preopdk**>. This card deck contains the inspection requirements necessary to identify defects that have occurred between or during SE use. They consist of examinations of the equipment exterior and interior surfaces, required servicing, and functional checks, as required. The cards and tasks are arranged in the most logical order for performing the required tasks. SE preoperational requirements shall be accomplished prior to each use. For SE, when there are numerous items covered in the preoperational checklist (e.g., adapters), a table may be included before the first inspection listing the nomenclature and part numbers of the items to be inspected. Preoperational checklists shall not be developed for automatic test equipment (ATE). ATE, as distinguished from SE, are those units which, being permanently situated at intermediate level maintenance activities, carry out predetermined programs of testing.

5.1.4.2 Daily inspection cards or daily inspection/servicing cards <**dayinspdk**>. The daily card deck shall contain the minimum daily maintenance requirements necessary to ensure the support equipment is ready for use. The daily inspection card deck shall provide inspection requirements for defects at a greater depth than the preoperational checklist. The inspection shall be accomplished in a logical sequence. If servicing instructions are not available in another manual,

Downloaded from http://www.everyspec.com

they shall be included with the daily inspection card deck. The title of the daily inspection card deck shall be changed to read "Daily Inspection/Servicing Cards."

5.1.4.3 Special inspection card deck <**spinspdk**>. Requirements sensitive to the occurrence of a prescribed number of days, operating hours, or cycles that are not compatible with inspection intervals shall appear in the special inspection card deck (e.g., 7, 14, or 21 days; 10, 35, or 75 hours). When assembling special cards, every effort shall be made to limit to eight hours elapsed maintenance time (EMT) the time required to perform any special inspection or combination of special inspections which, because of their intervals, become due simultaneously. Only one inspection cycle may be indicated in block 4, figure 1. The following detailed requirements apply:

a. Corrosion inspection requirements. The corrosion inspection program for items that are predominantly calendar sensitive shall consist of special inspections based on a cumulative number of days. These requirements are to inspect corrosion-prone areas for degradation that may have occurred during the preceding inspection interval. Corrosion-prone area illustrations shall be provided where necessary for clarity. Corrosion inspection tasks shall be identified by the letter "C" in block 11, figure 1.

b. Installed engine requirements. All engine and QEC maintenance requirements which are performed on the installed engine/QEC that do not have intervals compatible with those established in the phases shall be included as special inspections. All engine requirements included as special inspections shall be annotated in block 9, figure 1 with the word "engine."

5.1.4.4 Preservation/depreservation requirements card deck <**presdk**>. Preservation requirements shall be provided for short term (six months maximum) preservation. Preservation requirements shall include initial preservation procedures, scheduled maintenance to be accomplished while the SE or ATE is preserved. Depreservation procedures shall also be included (refer to 5.2.22.1).

5.1.4.5 Conditional inspections card deck <**conddk**>. Conditional inspections are those unscheduled inspections required to be accomplished because of the occurrence of a measurable abnormal operational event which exceeds the design limits of structural components or equipment and may compromise safety. The exceeding of design limits shall be determined at the time of occurrence by predetermined measurement criteria (e.g., pressure, temperature, RPMs, weight, speed, or torque). The occurrence of defects to components or equipment while operating within designed operating parameters is not considered to be a candidate for conditional inspections. Precarrier inspection requirements are exceptions to these criteria and shall be listed as conditional inspections.

5.1.4.6 Calendar <**calendardk**> or start <**startdk**> maintenance requirements card decks. These card decks contain the scheduled maintenance requirements necessary to maintain the support equipment. This includes checking, lubrication, servicing and inspection for degradation/corrosion. These cards shall contain requirements to ensure a thorough and searching examination of the equipment in both the static and functional states. They shall clearly establish

Downloaded from http://www.everyspec.com

inspection procedures that will detect material degradation that may have occurred during the preceding inspection interval. Clearances, pressures, tolerances, illustrations, support equipment required, and manual references are to be presented where pertinent. Periodicity shall be established to the occurrence of a prescribed number of days, starts, or cycles, as applicable. When functional checks of the equipment are required, only the applicable maintenance manual(s) shall be referenced. Each inspection shall be accomplished at equal hour or calendar day intervals. Requirements not compatible with the established interval shall be accomplished as special inspections. The following guidelines shall be used to determine if an inspection is a calendar or start inspection:

a. Calendar inspections. If the majority of the scheduled maintenance requirements specified for an inspection cycle are calendar sensitive, the requirements shall be based on calendar time (converted to days).

b. Start inspections. If the majority of the scheduled maintenance requirements specified for an inspection cycle are start sensitive, the requirements shall be based on starts.

5.1.5 Powered aerial target (PAT) card set <**patset**>. The powered aerial target card set shall be subdivided into the specific types of information card decks described in 5.1.5.1 through 5.1.5.3.

5.1.5.1 Acceptance/initial buildup card deck <**acptbldupdk**>. This card deck contains the acceptance inspections, buildup procedures, and testing and servicing requirements for newly issued targets. The cards are arranged in groups according to the rating or MOS required to perform the tasks.

5.1.5.2 Prelaunch card deck <**prelnchdk**>. This card deck contains the prelaunch requirements to inspect the target for defects, to verify servicing, and to ready it for launch. The cards and tasks are arranged in the most logical order for performing the required tasks. Prelaunch requirements shall be accomplished immediately prior to each use of the target.

5.1.5.3 Postlaunch/servicing card deck <**postlnchdk**>. This card deck contains the postlaunch maintenance and servicing requirements for the target. These requirements include procedures for decontamination, disassembly and buildup, inspection for degradation, and system servicing.

5.1.6 Powered surface target (PST) card set <**pstset**>. The powered surface target card set shall be subdivided into the specific types of information card decks described in 5.1.6.1 and 5.1.6.2.

5.1.6.1 Preoperational checklist deck <**preopdk>**. This checklist contains the inspection requirements arranged in the most logical order for performing the required tasks. Preoperational requirements shall be accomplished prior to each use of the target.

5.1.6.2 Periodic maintenance requirements card deck <**pmrdk**>. This card deck contains the scheduled maintenance requirements necessary to maintain powered surface targets. This includes servicing and inspection for degradation.

Downloaded from http://www.everyspec.com

5.1.7 Aviation life support systems (ALSS) card set <**alsset**>. The aviation life support systems card set contains the requirements necessary to inspect ALSS for degradation that has occurred since the previous inspection.

5.1.7.1 Periodic maintenance requirements card deck <**pmrdk**>. The cards shall address specific equipment within the scope of a given category of equipment. For example, the cards for the EMERGENCY PERSONAL PARACHUTES AND DROGUE SYSTEMS shall address the NES-12, A/P-28S-24, etc. The cards for the SEAT SURVIVAL KITS shall address the SKU-2/A, SKU-3/A, etc.

5.1.8 Airborne mine countermeasure (AMCM) equipment card set <**amcmset**>. The AMCM equipment card set shall be subdivided into the specific types of information card decks described in 5.1.8.1 through 5.1.8.7.

5.1.8.1 Periodic maintenance information card deck <**pmidk**>. This card deck contains the introductory information relative to the AMCM scheduled maintenance program. It includes a schedule for items having an approved mandatory removal/replacement interval or special tracking requirements; a list, by system and card number, of the inspection requirements to be performed; and conditional inspection requirements to be accomplished after the occurrence of certain over-limit situations.

5.1.8.2 Turnaround checklist **<turnchklst>**. The cards for the turnaround checklist contain tasks consecutively numbered and sequentially arranged in logical walkaround order. The requirements are those necessary to identify degradation that has occurred during flight. They consist of:

a. Inspections for obvious defects and integrity of the equipment exterior and interior.

b. Checks to determine the need for servicing fuel, oil, hydraulic fluid, and other critical consumables expended during normal operation.

5.1.8.3 Daily card deck **<dayinspdk>**. The daily card deck shall contain the minimum daily maintenance requirements and shall be arranged in a logical sequence of events. This includes servicing and inspections for degradation/corrosion. These requirements are to be in a greater depth than those contained in the turnaround checklist. If servicing instructions are not available in another manual, they shall be included with the daily inspection card deck. The title of the daily inspection card deck shall be changed to read "Daily Inspection/Servicing Cards."

5.1.8.4 Special inspection card deck <**spinspdk**>. Requirements sensitive to the occurrence of a prescribed number of days, operating hours, or cycles that are not compatible with inspection intervals shall appear in the special inspection card deck (e.g. 7, 14, or 21 days; 10, 35, or 75 hours). When assembling special cards, every effort shall be made to limit to eight hours elapsed maintenance time (EMT) the time required to perform any special inspection or combination of special inspections which, because of their intervals, become due simultaneously. Only one inspection cycle may be indicated in block 4, figure 1. The following detailed requirements apply:

Downloaded from http://www.everyspec.com

a. Corrosion inspection requirements. The corrosion inspection program for items that are predominantly calendar sensitive shall consist of special inspections based on a cumulative number of days. These requirements are to inspect corrosion-prone areas for degradation that may have occurred during the preceding inspection interval. Corrosion-prone area illustrations shall be provided where necessary for clarity. Corrosion inspection tasks shall be identified by the letter "C" in block 11, figure 1.

b. Engine removal/installation requirements. Engine removal/installation requirements (when required) shall be contained in the special cards by reference to the applicable maintenance manual (e.g., "remove engine in accordance with NAVAIR 01-XXX-X"). These cards shall list the total time required, consumable maintenance materials, and replacement parts needed to accomplish the removal or installation of the engine.

c. Engine bay area requirements. The inspection of equipment, components, and/or structures within the engine bay area that are practical only with the engine removed shall be programmed as specials at the same interval as the scheduled engine removal. The applicable cards shall contain the following: "NOTE: To be performed when the QECA is removed for scheduled inspection."

d. Installed engine requirements. All engine, propeller and QEC maintenance requirements which are performed on the installed engine/QEC that do not have intervals compatible with those established in the phases shall be included as specials. All engine requirements included as special inspections shall be annotated in block 9, figure 1 with the word "engine" or "propeller," as applicable.

5.1.8.5 Preservation/Depreservation requirements card deck **<presdk>**. Preservation requirements shall be provided for short term (six months maximum) preservation. Preservation requirements shall include initial preservation procedures, scheduled maintenance to be accomplished while the AMCM is preserved. Depreservation procedures shall also be included (refer to 5.2.22.1).

5.1.8.6 Conditional inspections card deck <**conddk**>. Conditional inspections are those unscheduled inspections required to be accomplished because of the occurrence of a measurable abnormal operational event which exceeds the design limits of structural components or equipment and may compromise safety. The exceeding of design limits shall be determined at the time of occurrence by predetermined measurement criteria (e.g., pressure, temperature, RPMs, weight, speed, or torque). The occurrence of defects to components or equipment while operating within designed operating parameters is not considered to be a candidate for conditional inspections.

5.1.8.7 Calendar <**calendardk**>, hour <**hourdk**>, or start <**startdk**> maintenance requirements card decks. These card decks contain the scheduled maintenance requirements necessary to maintain the equipment. This includes checks, lubrication, servicing and inspection for degradation/corrosion. These cards shall contain requirements to ensure a thorough and searching examination of the equipment in both the static and functional states. Coverage shall clearly

Downloaded from http://www.everyspec.com

establish inspection procedures that will detect material degradation that may have occurred during the preceding inspection interval. Clearances, pressures, tolerances, illustrations, support equipment required, and manual references are presented where pertinent. Periodicity shall be established to the occurrence of a prescribed number of days, starts, or cycles, as applicable. When functional checks of the equipment are required, only the applicable maintenance manual(s) shall be referenced. Each inspection shall be accomplished at equal hour or calendar day intervals. Requirements not compatible with the established interval shall be accomplished as special inspections. The following guidelines shall be used to determine if an inspection is a calendar, hour, or start inspection:

a. Calendar inspections. If the majority of the scheduled maintenance requirements specified for an inspection cycle are calendar sensitive, the requirements shall be based on calendar time (converted to days).

b. Hour inspection. If the majority of the scheduled maintenance requirements specified for an inspection cycle are hour sensitive, the requirements shall be based on hours.

c. Start inspections. If the majority of the scheduled maintenance requirements specified for an inspection cycle are start sensitive, the requirements shall be based on starts.

5.1.9 Unmanned aerial vehicle (UAV) card set <**uavset**>. The unmanned aerial vehicle (UAV) card set shall be subdivided into the specific types of information card decks described in 5.1.9.1 through 5.1.9.7.

5.1.9.1 Periodic maintenance information card deck <**pmidk**>. This card deck contains the introductory information relative to the UAV scheduled maintenance program. It includes a schedule for items having an approved mandatory removal/replacement interval or special tracking requirements; a list, by system and card number, of the inspection requirements to be performed; and conditional inspection requirements to be accomplished after the occurrence of certain over-limit situations.

5.1.9.2 Turnaround checklist <**turnchlst**>. The cards for the turnaround checklist contain tasks consecutively numbered and sequentially arranged in logical walkaround order. The requirements are those necessary to identify degradation that has occurred during flight. They consist of:

a. Inspections for obvious defects and integrity of the equipment exterior and interior.

b. Checks to determine the need for servicing fuel, oil, hydraulic fluid, and other critical consumables expended during normal operation.

5.1.9.3 Daily inspection card deck or daily inspection/servicing card deck <**dayinspdk**>. The daily card deck shall contain the minimum daily maintenance requirements necessary to ensure the equipment is ready for use. This includes servicing and inspections for degradation/corrosion. The daily card deck shall be arranged in a logical sequence of events. These requirements are to be in a greater depth than those contained in the turnaround checklist. If servicing instructions are

Downloaded from http://www.everyspec.com

not available in another manual, they shall be included with the daily inspection card deck. The title of the daily inspection card deck shall be changed to read "Daily Inspection/Servicing Cards."

5.1.9.4 Special inspection card deck <**spinspdk**>. Requirements sensitive to the occurrence of a prescribed number of days, operating hours, or cycles that are not compatible with inspection intervals shall appear in the special inspection card deck (e.g., 7, 14, or 21 days; 10, 35, or 75 hours). When assembling special cards, every effort should be made to limit to eight hours elapsed maintenance time (EMT) the time required to perform any special inspection or combination of special inspections which, because of their intervals, become due simultaneously. Only one inspection cycle may be indicated in block 4, figure 1. The following detailed requirements apply:

a. Corrosion inspection requirements. The corrosion inspection program for items that are predominantly calendar sensitive shall consist of special inspections based on a cumulative number of days. These requirements are to inspect corrosion-prone areas for degradation that may have occurred during the preceding inspection interval. Corrosion-prone area illustrations shall be provided where necessary for clarity. Corrosion inspection tasks shall be identified by the letter "C" in block 11, figure 1.

b. Engine removal/installation requirements. Engine removal/installation requirements (when required) shall be contained in the special cards by reference to the applicable maintenance manual (e.g., "remove engine in accordance with NAVAIR 01-XXX-X"). These cards shall list the total time required, consumable maintenance materials, and replacement parts needed to accomplish the removal or installation of the engine.

c. Engine bay area requirements. The inspection of equipment, components, and/or structures within the engine bay area that are practical only with the engine removed shall be programmed as specials at the same interval as the scheduled engine removal. The applicable cards shall contain the following: "NOTE: To be performed when the QECA is removed for scheduled inspection."

d. Installed engine requirements. All engine, propeller and QEC maintenance requirements which are performed on the installed engine/QEC that do not have intervals compatible with those established in the phases shall be included as specials. All engine requirements included as special inspections shall be annotated in block 9, figure 1 with the word "engine" or "propeller," as applicable.

5.1.9.5 Preservation/Depreservation requirements card deck **<presdk>**. Preservation requirements shall be provided for short term (six months maximum) preservation. Preservation requirements shall include initial preservation procedures; scheduled maintenance is to be accomplished while the UAV is preserved. Depreservation procedures shall also be included (refer to 5.2.22.1).

Downloaded from http://www.everyspec.com

5.1.9.6 Conditional inspections card deck <**conddk**>. Conditional inspections are those unscheduled inspections required to be accomplished because of the occurrence of a measurable abnormal operational event which exceeds the design limits of structural components or equipment and may compromise safety. The exceeding of design limits shall be determined at the time of occurrence by predetermined measurement criteria (e.g., pressure, temperature, RPMs, weight, speed, or torque). The occurrence of defects to components or equipment while operating within designed operating parameters is not considered to be a candidate for conditional inspections. Pre-shipboard inspection requirements are exceptions to these criteria and shall be listed as conditional inspections.

5.1.9.7 Calendar <**calendardk**>, hour <**hourdk**>, or start <**startdk**> maintenance requirements card decks. These card decks contain the scheduled maintenance requirements necessary to maintain the equipment. This includes checking lubrication, servicing and inspection for degradation/corrosion. These decks shall contain requirements to ensure a thorough and searching examination of the equipment in both the static and functional states. Coverage shall clearly establish inspection procedures that will detect material degradation that may have occurred during the preceding inspection interval. Clearances, pressures, tolerances, illustrations, support equipment required, and manual references are presented where pertinent. Periodicity shall be established to the occurrence of a prescribed number of days, starts, or cycles, as applicable. When functional checks of the equipment are required, only the applicable maintenance manual(s) shall be referenced. Each inspection shall be accomplished at equal hour or calendar day intervals. Requirements not compatible with the established interval shall be accomplished as special inspections. The following guidelines shall be used to determine if an inspection is a calendar, hour, or start inspection:

a. Calendar inspections. If the majority of the scheduled maintenance requirements specified for an inspection cycle are calendar sensitive, the requirements shall be based on calendar time (converted to days).

b. Hour inspection. If the majority of the scheduled maintenance requirements specified for an inspection cycle are hour sensitive, the requirements shall be based on hours.

c. Start inspections. If the majority of the scheduled maintenance requirements specified for an inspection cycle are start sensitive, the requirements shall be based on starts.

5.2 Card types and arrangement. The card sets described in 5.1.1 through 5.1.9 shall be made up of the specific types of cards arranged in the following order:

a. Front matter cards (refer to 5.2.1).
b. Introduction card (refer to 5.2.2).

c. Introduction and application statements card (refer to 5.2.3).

d. Definitions card (refer to 5.2.4).

Downloaded from http://www.everyspec.com

e. Removal/replacement schedule and special tracking requirements card (refer to 5.2.5).

f. Inspection requirements index cards (refer to 5.2.6).

g. Conditional inspection listing cards (refer to 5.2.7).

h. Phase change implementation card (refer to 5.2.8).

i. Abbreviations and index cards (refer to 5.2.9).

j. Abbreviations, index, and checkflight requirements card (refer to 5.2.10).

k. Special tools/support equipment list cards (refer to 5.2.11).

l. Consumable maintenance material list cards (refer to 5.2.12).

m. Replacement parts list cards (refer to 5.2.13).

n. Work area cards or zone cards (refer to 5.2.14).

o. Zone title and description cards (refer to 5.2.15).

p. Zonal inspection criteria card (refer to 5.2.16).

q. Access panel cards (refer to 5.2.17).

r. Antenna location cards (refer to 5.2.18).

s. Checklist task cards (refer to 5.2.19).

t. Phase sequence control cards (refer to 5.2.20).

u. QECA sequence control card(s) (refer to 5.2.21).

v. Task cards (refer to 5.2.22).

w. Illustration cards (refer to 5.2.23).

x. QA cards (refer to 5.2.24).

y. Phase packages (**Aircraft phased maintenance card deck only**).
   (1) Phase cover card (refer to 5.2.1).

   (2) Sequence control cards (**Master deck only**) (refer to 5.2.20).

Downloaded from http://www.everyspec.com

(3) Task cards (refer to 5.2.22).

(4) Illustration cards (refer to 5.2.23).

(5) QA cards (refer to 5.2.24).

5.2.1 Front matter cards <**fmcd**>. Card deck front matter cards shall consist of a title card, cover cards (if applicable), list of effective cards ("A" card), List of Technical Publications Deficiency Reports Incorporated card (TPDR card), and a warnings applicable to hazardous materials card (HMWS card). For detailed requirements and content of the front matter cards, refer to MIL-STD-3001-1, Appendix B.

5.2.2 Introduction card <**introcd**>. The introduction statement contains the purpose, scope, and arrangement of the periodic maintenance information card (PMIC) deck. The introduction shall also reference the comprehensive introduction contained in the maintenance manual for equipment.

5.2.2.1 Introduction card for periodic maintenance information card (PMIC) deck. The introduction statement shall be presented as follows:

"INTRODUCTION

This card deck contains introductory information necessary to ensure proper maintenance of the weapon system. It includes all items having an approved mandatory removal/ replacement interval and those items requiring Scheduled Removal Component (SRC) cards as required by COMNAVAIRFORINST 4790.2 ; the Inspection Requirements index which lists, by system and card number, those requirements to be performed; and the Conditional Inspection Listing for those requirements that shall be accomplished after the occurrence of an over-limit situation.

The Conditional Inspection requirements include a brief description of what is to be performed and a reference to the manual or directive containing detailed requirements.

The Phase Change Implementation card, if included, identifies additional inspection requirements made necessary by card deck update.

In instances where conflict exists between the requirements contained in this card deck and other maintenance directives bearing prior dates, this card deck shall take precedence.

A comprehensive introduction for this equipment is contained in (*insert the publication number of the manual containing the complete introduction for the end item*)."

Downloaded from http://www.everyspec.com

5.2.2.2 Introduction card for AMCM or UAV PMIC decks. The introduction statement shall be presented as follows:

"INTRODUCTION

This card deck contains introductory information necessary to ensure proper maintenance of the weapons system. It includes all items having an approved mandatory removal/replacement interval and those items requiring scheduled removal component (SRC) cards, assembly service record (ASR) cards, equipment history record (EHR) cards, and module service record (MSR) cards as required by COMNAVAIRFORINST 4790.2; the inspection requirements index which lists, by system and card number, those requirements to be performed; and the conditional inspection listing for those requirements that shall be accomplished after occurrences of an over-limit situation.

The conditional inspection requirements include a brief description of what is to be performed and a reference to the manual or directive containing detailed requirements.

In instances where conflict exists between the requirements contained in this card deck and other maintenance directives bearing prior dates, this card deck shall take precedence.

A comprehensive introduction for this equipment is contained in (*insert the publication number of the manual containing the complete introduction for the end item*)."

5.2.3 Introduction and application statements card <**introaplcd**>. Each of the following card deck types shall have an introduction and application statement. The introduction statement contains the purpose, scope, and arrangement of the deck. The introduction shall also reference the comprehensive introduction contained in the maintenance manual for equipment. The application statement contains inspection interval applicability information.

When hazardous materials are referenced, the statement contained in the warnings applicable to hazardous materials card (HMWS card) shall be included. Refer to 5.2.1.

5.2.3.1 Turnaround checklist deck. The introduction and application statements may be presented as expressed below:

"INTRODUCTION

This checklist contains abbreviated inspection requirements necessary to ensure the integrity of the (*aircraft, equipment or vehicle*) for (*flight or use*) and to determine the need for servicing. Time required to perform these tasks is approximately (*insert number*) hours EMT. A comprehensive introduction for this

Downloaded from http://www.everyspec.com

equipment is contained in (*insert the publication number of the manual containing the complete introduction for the end item*)."

"APPLICATION

Turnaround maintenance requirements shall be accomplished between flights and are valid for the period established in COMNAVAIRFORINST 4790.2. The accomplishment of the Daily Inspection prior to flight does not satisfy the requirements of the Turnaround Inspection."

5.2.3.2 Preoperational checklist decks. The statements may be presented as expressed below. When hazardous materials are referenced in the manual, the following statement shall be added after the introduction:

"Warnings in this manual alert personnel to hazards associated with the use of hazardous materials. Additional information related to hazardous materials is provided in OPNAVINST 5100.23, Navy Safety and Occupational and Health (SOH) program manual; NAVSUPINST 5100.27, Navy Hazardous Material Control Program; and DoD 6050.5, Hazard Communication Program publications. For each hazardous material used within the Navy, a Material Safety Data Sheet (MSDS) must be provided and be available for review by users. Consult your local safety and health staff concerning any questions regarding hazardous materials, MSDS, personal protective equipment requirements, appropriate handling and emergency procedures, and disposal guidance."

"INTRODUCTION

This checklist contains inspection requirements necessary to ensure the integrity of the equipment for operation and to determine the need for servicing. Time required to perform these tasks is approximately (*insert number*) hours EMT. A comprehensive introduction for this equipment is contained in (*insert the publication number of the manual containing the complete introduction for the end item*)."

"APPLICATION

Preoperational checklist maintenance requirements shall be accomplished prior to each use."

5.2.3.3 Aircraft daily card deck and special, preservation, and conditional card decks. The introduction and application statements shall be presented as follows:

Daily Card Deck

"INTRODUCTION

Downloaded from http://www.everyspec.com

This card deck contains the minimum Daily requirements necessary to ensure the aircraft is safe for flight. Clearances, pressures, tolerances, illustrations, support equipment required and manual references are presented where pertinent. Daily requirements include inspections for defects and system degradation at a greater depth than the Turnaround Checklist.

A comprehensive introduction for this equipment is contained in (*insert the publication number of the manual containing the complete introduction for the end item*)."

"APPLICATION

Daily requirements are valid for the period established by COMNAVAIRFORINST 4790.2. The accomplishment of these requirements prior to flight shall not satisfy the requirements of a Turnaround inspection."

Special, Preservation, and Conditional Card Decks

"INTRODUCTION

This card deck contains the minimum Special/Preservation/Conditional and ASPA requirements necessary to ensure the aircraft is safe for flight. Clearances, pressures, tolerances, illustrations, support equipment required and manual references are presented where pertinent. These requirements are grouped in the following order:

Special requirements are developed from tasks which do not fit in the phased package due to conflicting interval requirements. Inspections performed during Turnaround or Daily inspections shall not be duplicated by Special Inspections. Preservation requirements provide short term preservation procedures, maintenance while preserved and depreservation procedures.

Conditional requirements are presented in this card deck when detailed requirements do not exist in an appropriate technical manual.

ASPA requirements provide special inspection requirements for preparation of the aircraft for ASPA evaluation and for restoration to a flight ready condition.
A comprehensive introduction for this equipment is contained in (*insert the publication number of the manual containing the complete introduction for the end item*)."

"APPLICATION

Special, Preservation, Conditional and ASPA requirements shall be accomplished at the interval or condition specified on the card.

Downloaded from http://www.everyspec.com

Level I Short Term Preservation shall be applied when the aircraft has been idle/non-flyable in excess of (*insert number*) days and is valid for up to 93 days."

5.2.3.4 Calendar or phased maintenance requirements card deck. The introduction and application statements shall be presented as follows:

"INTRODUCTION

This card deck contains the minimum calendar maintenance requirements to inspect the aircraft for degradation and to perform essential preventive maintenance. Clearances, pressures, tolerances, illustrations, support equipment required and manual references are presented where pertinent. The cards are arranged in groups according to the rating/MOS required to perform the tasks. A sequence control card(s) shall be used to program the accomplishment of the requirements in the proper sequence. These requirements provide (*insert number*) balanced inspection intervals which constitute a (*insert number*) day calendar inspection cycle. A comprehensive introduction for this equipment is contained in (*insert the publication number of the manual containing the complete introduction for the end item*)."

"APPLICATION

The maintenance requirements of each calendar inspection shall be accomplished at the expiration of *(insert number*) days following the completion of the prior calendar inspection. The calendar inspection cycle is repetitive for the service life of the aircraft."

or

"INTRODUCTION

This card deck contains the minimum phased maintenance requirements to inspect the aircraft for degradation and to perform essential preventive maintenance. Clearances, pressures, tolerances, illustrations, support equipment required and manual references are presented where pertinent. The cards are arranged in groups according to the rating/MOS required to perform the tasks. A sequence control card(s) shall be used to program the accomplishment of the requirements in the proper sequence. These requirements provide (*insert number*) balanced inspection intervals which constitute a (*insert number*) flight hour phased maintenance cycle. A comprehensive introduction for this equipment is contained in (*insert the publication number of the manual containing the complete introduction for the end item*)."

Downloaded from http://www.everyspec.com

"APPLICATION

The maintenance requirements of each phase interval inspection shall be accomplished at the expiration of (*insert number*) flight hours following the completion of the prior phase interval inspection. The phased maintenance cycle is repetitive for the service life of the aircraft."

5.2.3.5 QECA maintenance requirements card deck. The introduction statement and the appropriate application statement shall be presented as follows:

"INTRODUCTION

This card deck contains the minimum scheduled maintenance requirements to inspect the QECA for degradation and to perform essential preventive maintenance. Clearances, pressures, tolerances, illustrations, support equipment required and manual references are presented where pertinent. It includes all aircraft applications of the particular engine model. The cards are arranged in groups beginning with the engine requirements followed by separate QECA sections for each aircraft application. A sequence control card(s) shall be used to program the accomplishment of the requirements in the proper sequence. A comprehensive introduction for this equipment is contained in (*insert the publication number of the manual containing the complete introduction for the end item*)."

"APPLICATION

The QECA maintenance requirements shall be accomplished at the interval of (*insert number*) hours for the (*insert applicable engine type/model*). These requirements shall also be accomplished as required by COMNAVAIRFORINST 4790.2 when an engine is inducted into the Intermediate Maintenance Activity for repair."

or

"APPLICATION

The QECA maintenance requirements shall be accomplished as required by COMNAVAIRFORINST 4790.2 whenever an engine is inducted into the Intermediate Maintenance Activity for repair."

Downloaded from http://www.everyspec.com

5.2.3.6 Airborne armament equipment or special stores daily/special card deck. The introduction and application statement shall be presented as follows:

"INTRODUCTION

This card deck contains the minimum scheduled maintenance requirements for airborne armament equipment or special stores. The periodic maintenance requirements consist of daily and special inspections. The daily requirements include inspection for degradation that has occurred since the previous inspections. Clearances, pressures, tolerances, illustrations, support equipment required and manual references are presented where pertinent. Tasks presented thereon are sequentially arranged and consecutively numbered in the most logical order to perform the required tasks. Special requirements are scheduled to be performed as dictated by a cumulative number of days, hours, or events as applicable. A comprehensive introduction for this equipment is contained in (*insert the publication number of the manual containing the complete introduction for the end item*)."

"APPLICATION

The scheduled maintenance requirements set forth herein shall be accomplished at the intervals established on the abbreviation and index cards with the exception of the daily requirement. Daily requirements shall be accomplished upon initial installation of the equipment or special store(s) and when usage of the equipment or special store(s) is contemplated."

5.2.3.7 SE/ATE calendar or start/special/preservation/conditional card decks. The introduction and application statements shall be presented as follows:

"INTRODUCTION

This card deck contains the minimum Calendar or Start/Special/Preservation/ Conditional (if applicable) requirements necessary to ensure the SE or ATE is safe for operational use. Clearances, pressures, tolerances, illustrations, support equipment required and manual references are presented where pertinent. These requirements are grouped in the following order:

Calendar or Start requirements - include inspections for defects and material degradation at a greater depth than the preoperational checklist.

Special requirements - are scheduled to be performed on a particular day, or after a cumulative number of operating hours or starts.

Preservation requirements - provide short term preservation procedures, maintenance while preserved and depreservation procedures.

Downloaded from http://www.everyspec.com

Conditional requirements - are presented in this card deck when detailed requirements do not exist in an appropriate technical manual.

A comprehensive introduction for this equipment is contained in (*insert the publication number of the manual containing the complete introduction for the end item*)."

"APPLICATION

The maintenance requirements set forth herein shall be accomplished at the intervals listed on the abbreviation and index card. Level I Short Term Preservation shall be applied when the SE has been idle in excess of (*insert number*) days and is valid for up to 93 days."

5.2.3.8 Aircraft peculiar support equipment (PSE) maintenance requirements card deck. The introduction and application statement shall be presented as follows:

"INTRODUCTION

This card deck contains the minimum scheduled maintenance requirements necessary to inspect for equipment degradation and to perform essential preventive maintenance. Clearances, pressures, tolerances, illustrations, support equipment required, and manual references are presented where pertinent. It includes all PSE applicable to this model/type aircraft. The cards in this deck are arranged in the sequence listed on the Abbreviation and index card. QA requirements are provided at the end of each piece/group of equipment covered within. A comprehensive introduction for this equipment is contained in (*insert the publication number of the manual containing the complete introduction for the end item*)."

"APPLICATION

The maintenance requirements set forth herein shall be accomplished at the intervals listed on the Abbreviation and index cards. Level I Short Term preservation shall be applied when the PSE has been idle in excess of (*insert number*) days and is valid for up to 93 days."

5.2.3.9 Powered aerial target (PAT) acceptance/initial buildup card deck. The introduction and application statements shall be presented as follows:

"INTRODUCTION

This card deck contains the acceptance inspections, buildup procedures, and testing and servicing requirements for the newly issued target. Clearances, pressures, tolerances, illustrations, support equipment required and manual references are

Downloaded from http://www.everyspec.com

presented where pertinent. The cards in this deck are arranged in groups according to the rating/MOS required to perform the tasks. A comprehensive introduction for this equipment is contained in (*insert the publication number of the manual containing the complete introduction for the end item*)."

"APPLICATION

Acceptance/initial buildup requirements shall be accomplished upon issue and uncrating of the new target to prepare it for mission operation."

5.2.3.10 Powered aerial target (PAT) prelaunch card deck. The introduction and application statements shall be presented as follows:

"INTRODUCTION

This card deck contains the prelaunch maintenance requirements to inspect the target for defects, to verify servicing, and to ready it for launch. Clearances, pressures, tolerances, illustrations, support equipment required and manual references are presented where pertinent. The cards and tasks thereon are sequentially arranged and consecutively numbered in a logical order for performing the required tasks."

"APPLICATION

Prelaunch requirements shall be accomplished prior to each use of the target."

5.2.3.11 Powered aerial target (PAT) postlaunch card deck. The introduction and application statements shall be presented as follows:

"INTRODUCTION

This card deck contains the postlaunch maintenance requirements to decontaminate the target, inspect it for degradation, and to perform all maintenance and testing necessary to return it to an operationally ready condition. Clearances, pressures, tolerances, illustrations, support equipment required and manual references are presented where pertinent. The cards in this deck are arranged in groups according to the rating/MOS required to perform the tasks. The cards and tasks are arranged in the most logical order for performing the required tasks. A comprehensive introduction for this equipment is contained in (*insert the publication number of the manual containing the complete introduction for the end item*)."

"APPLICATION

Postlaunch requirements shall be accomplished after each recovery or retrieval of the target."

Downloaded from http://www.everyspec.com

5.2.3.12 Powered surface target (PST) periodic card deck. The introduction and application statements shall be presented as follows:

"INTRODUCTION

This card deck contains the minimum scheduled maintenance requirements to inspect for degradation that has occurred since the preceding inspection interval and to perform essential preventive maintenance. A comprehensive introduction for this equipment is contained in (*insert the publication number of the manual containing the complete introduction for the end item*)."

"APPLICATION

The maintenance requirements set forth herein shall be accomplished at the intervals listed on the abbreviation index card."

5.2.3.13 AMCM or UAV daily card deck. The introduction and application statements shall be presented as follows:

"INTRODUCTION

This card deck contains the minimum daily maintenance requirements. Daily requirements include inspections for defects at a greater depth than the turnaround checklist and inspection for system degradation. These inspections are designed to ensure the equipment is safe for operation. The daily card deck and tasks are sequentially arranged and consecutively numbered in the most logical order to perform the required tasks. A comprehensive introduction for this equipment is contained in (*insert the publication number of the manual containing the complete introduction for the end item*)."

"APPLICATION

Daily requirements are valid for the period established by COMNAVAIRFORINST 4790.2. The accomplishment of these requirements prior to flight shall not satisfy the requirements of a turnaround inspection."

Downloaded from http://www.everyspec.com

5.2.3.14 AMCM or UAV calendar or start/special/preservation/conditional card decks. The introduction and application statements shall be presented as follows:

"INTRODUCTION

This card deck contains the minimum Calendar or Start/Special/Preservation/ Conditional requirements necessary to ensure the equipment is safe for operation. Special requirements are scheduled to be performed on a particular day or after a cumulative number of operating hours or cycles/events. Preservation requirements provide short term preservation procedures, maintenance while preserved, and depreservation procedures. Conditional requirements are contained in this deck if no detailed requirements exist in an appropriate technical manual for references in the PMIC. The cards have been arranged in groups in this deck in the following order: Calendar or Start/Special/Preservation/Conditional. Each card defines the group to which the card belongs. Clearances, pressures, tolerances, illustrations, support equipment required, and manual references are presented where pertinent. A comprehensive introduction for this equipment is contained in (*insert the publication number of the manual containing the complete introduction for the end item*)."

"APPLICATION

Calendar or Start/Special/Preservation/Conditional (if applicable) requirements shall be accomplished at the interval or condition specified on the card. Level I short term preservation shall be applied when the equipment has been idle/nonoperational in excess of (*insert number*) days and is valid for up to 93 days."

Note: It is the Fleet Readiness Centers' responsibility to determine the maximum time the equipment may remain idle before short term (level I) preservation is required.

5.2.3.15 ALSS maintenance requirements card deck <**alssintroaplcd**>. The introduction and application statements shall be presented as follows:

"INTRODUCTION

This card deck contains the scheduled maintenance requirements to inspect for degradation and to perform essential preventive maintenance of the ALSS equipment identified in the Applicable Equipment List. Clearances, pressures, tolerances, illustrations, support equipment required and manual references are presented where pertinent. The cards in this deck are arranged in the sequence listed on the Abbreviations and Index card. QA requirements are provided at the end of each section. A comprehensive introduction for this equipment is contained in (*insert the publication number of the manual containing the complete introduction for the end item*)."APPLICATION

Downloaded from http://www.everyspec.com

The maintenance requirements set forth herein shall be accomplished at the intervals listed on the Abbreviations and Index card."

5.2.3.15.1 ALSS maintenance requirements card applicable equipment list. The applicable equipment list shall identify, by nomenclature and part number, each unit of equipment requiring inspection within the specified category of ALSS specified by the card deck.

5.2.4 Definitions card <**defcd**>. Definition cards (see figure 5) shall be developed for all card decks with the exception of the preoperational and turnaround checklists and the periodic maintenance information card decks.

5.2.5 Removal/replacement schedule and special tracking requirements card <**rrschtrkcd**> (**for periodic maintenance information card decks only**). With the exception of ALSS periodic maintenance information card decks, a removal/replacement schedule and special tracking requirements card (see figure 6) shall be developed. The prefacing statement contains the established criteria for removal and replacement of approved scheduled removal components (SRCs).

a. All items having an approved mandatory removal/replacement interval and those items requiring SRC cards, Assembly Service Record (ASR) cards, Equipment History Record (EHR) and Modular Service Record (MSR) cards required by COMNAVAIRFORINST 4790.2 shall be listed. Information shall be included for each aircraft and its critical components indicating their assigned structural life limits as required by NAVAIRINST 13120.1, Fixed Wing Aircraft Structural Life Limits or NAVAIRINST 13130.1, Rotary Wing Aircraft Structural Life Limits, as applicable. Items requiring a scheduled removal component card shall be preceded by an asterisk (*). All other requirements shall be identified by reference to notes which shall be provided within each system (e.g., airframe, power plant, electrical power system, landing gear, etc.). The information shall be presented and arranged in the sequence appearing in the work unit code manual index.

b. SRC items shall be grouped together within the applicable section of the PMIC, clearly indicating the tracking vehicle, all time/cycle requirements, and respective Fleet Readiness Centers if different from the aircraft, weapon system, or support equipment Fleet Readiness Centers. A note shall be added under the "Remarks" entry identifying all depot life limited items and stating these items do not require visual verification of component or assembly serial number during O and I level maintenance.

c. All ASR items shall be grouped together within the applicable section of the PMIC, clearly indicating the tracking vehicle. All internal ASR time/cycle sensitive items shall be listed under the respective ASR with their time/cycle requirements. A note shall be added under the "Remarks" entry identifying all depot life limited items and stating these items do not require visual verification of component or assembly serial number during O and I level maintenance.

d. MSR items shall be grouped together within the applicable section of the PMIC, clearly indicating the tracking vehicle. If time/cycle requirements are not applicable, it shall so state. A note shall be added under the "Remarks" entry identifying all depot life limited items and stating

Downloaded from http://www.everyspec.com

these items do not require visual verification of component or assembly serial number during O and I level maintenance.

e. EHR items shall be grouped together within the applicable section of the PMIC, clearly indicating the tracking vehicle and the respective CFA. If time/cycle requirements are not applicable, it shall so state.

(1) Nomenclature - the item nomenclature shall be in consonance with applicable source data and existing TMs. When conflict exists, the noun nomenclature presented in the illustrated parts breakdown (IPB) shall take precedence.

(2) Part/model number - the part number as shown in the IPB shall be listed. If the part number is not available, the approved model number shall be used.

(3) Disposition - action to be taken with the removed item shall be stated as either "turn in," "scrap," or "retire."

(4) Removal interval - the removal interval in calendar time, hours, cycles, or events shall be expressed.

(5) Remarks - provides notification of additional requirements or information concerning a particular component.

5.2.6 Inspection requirements index cards <**inspindcd**> (**for periodic maintenance information card decks only**). With the exception of the ALSS periodic maintenance information card deck, an inspection requirements index card (see figure 7) shall be developed. The card (s) shall be developed as follows:

a. The first card shall contain the following:

(1) The identification code of each type of inspection applicable to the aircraft under consideration (e.g., "D" for "daily," "S" for "special," etc.).

(2) The index by systems, listed in the sequence provided by the WUC manual index, and the identity of the PMIC card(s) which list the task cards for each system.

b. The second and succeeding cards of the index shall contain the following:

(1) A list (**standard list**) of the systems having inspection requirements arranged in the order appearing in the WUC manual index.

(2) A list, adjacent to each system, identifying all applicable prime task cards.

Downloaded from http://www.everyspec.com

5.2.7 Conditional inspection listing cards <**condinspcd**> (**for aircraft, AMCM, UAV periodic maintenance information card decks only**). These cards (see figure 8) contain the following information:

a. A list (**standard list**), by system, of conditional inspections required to be accomplished because of the occurrence of a measurable abnormal event which exceeds the design limits of the structural components or equipment and may compromise aircraft safety of flight.

b. A list of the task requirements including a brief description of what is to be performed and a reference to the publications containing the detailed inspection requirements.

5.2.8 Phase change implementation card <**phchgcd**> (**for aircraft periodic maintenance information card decks only**).

a. This card (see figure 9) is required only if during a revision of the phased maintenance card deck, specific inspection or maintenance requirements are re-sequenced among the phases, causing an unacceptable inspection of critical systems or components upon implementation of the revised card deck.

b. This card may convey special instructions applicable to implementation of the revised card deck.

5.2.9 Abbreviations and index cards <**abindxcd**>. Abbreviations and index cards (see figures 10 and 11) shall be developed for all card types with the exception of the preoperational and turnaround checklists, phased maintenance card decks, and the periodic maintenance information card decks.

a. The abbreviation list identifies each abbreviation and acronym used in the cards. The list is arranged in alphabetical order.

b. The index cards provide a list of the inspections contained in the cards and an inclusive listing of the cards applicable to each. The index for PSE provides a list, by part number and nomenclature, of the inspections contained in the cards and an inclusive listing of the cards applicable to each (see figure 11).

5.2.10 Abbreviations, index, and checkflight requirements card <**abindxcd**> (**for phased maintenance card decks only**).

a. The abbreviation list (see figure 12) identifies each abbreviation and acronym used in the cards. The list is arranged in alphabetical order.

b. The phased maintenance card index (see figure 12) provides:
(1) An inclusive listing of the cards applicable to each phase inspection.

Downloaded from http://www.everyspec.com

(2) A checkflight requirements list (see figure 12) which identifies the cards applicable to checkflight requirements. Checkflight requirements shall be determined utilizing the conditions set forth in COMNAVAIRFORINST 4790.2.

5.2.11 Special tools/support equipment list cards <**secd**>. Special tools/support equipment list cards (see figures 13 and 14) shall be developed for all card deck types with the exception of preoperational and turnaround checklists. These cards are also not required for periodic maintenance information card decks with the exception of the ALSS deck. The special tools/support equipment list cards shall contain the following information:

a. A list of special tools and support equipment required to accomplish the maintenance task requirements **<stsetable>** (**standard list**). The cards shall also reference the comprehensive listing contained in the maintenance manual for the equipment.

Note: If a Special Tools/Support Equipment Table needs to indicate configurations or phases (as in figure 13), then a Continuous Acquisition and Life-cycle Support (CALS) table <**table**> should be used instead of the <**stsetable**> (**standard list**).

b. Special tools and support equipment are listed alphabetically by noun nomenclature. The list includes the part number and type or model number. For tasks requiring the simultaneous use of two or more identical items, the quantity is also included.

c. Special adapters, jacks, slings, preoilers, hydraulic test stands, torque wrenches, spring scales, electrical power units, and bomb hoists are examples of items to be included in this list.

d. The list shall not include common hand tools such as screwdrivers, pliers, etc., which are normally found in the mechanic's tool box.

e. Special tools with several alternate part numbers and easily identified by noun nomenclature shall not be identified by part number (e.g., oil cans, grease guns, push/pull scales, torque wrenches, etc.).

5.2.12 Consumable maintenance material list cards <**consumcd**>. Consumable maintenance material list cards (see figures 15, 16, and 17) shall be developed for all card deck types with the exception of PAT prelaunch cards and preoperational and turnaround checklists. Also, these cards are not required for periodic maintenance information card decks with the exception of the ALSS deck. The consumable maintenance material list cards shall contain the following information:

a. An alphabetically itemized list **<consumtable>** (**standard table**), by noun nomenclature, of all consumable maintenance materials necessary to accomplish the tasks. Consumable maintenance materials are those supplies that are consumed through use or for which a definite fixed quantity cannot be specified for each task, such as oil, hydraulic fluid, paint, cleaning solvents, thread, leak detection compounds, dry film lubricant, preservation materials, and

Downloaded from http://www.everyspec.com

lockwire. The cards should also reference the comprehensive listing contained in the introduction of the maintenance manual for equipment.

b. HMWS index number, when applicable, shall be listed following the nomenclature for all hazardous materials used.

c. Materials shall be listed by government specification unless alternate identification is approved by the requiring activity. Manufacturer brand names are prohibited except where no manufacturer's part number, military specification, or federal specification is assigned to the desired material and the requiring activity has specifically authorized their use or application.

5.2.13 Replacement parts list cards <**rplcd**>. Replacement parts list cards (see figures 18 and 19) shall be developed for all card deck types with the exception of PAT prelaunch card deck and preoperational and turnaround checklists. These cards are also not required for periodic maintenance information card decks with the exception of the ALSS deck. The replacement parts list cards shall contain the following information:

a. An alphabetically itemized list **<rpltable>** (**standard table**), by noun nomenclature, of all mandatory replacement parts necessary to accomplish the tasks. Mandatory replacement parts are those items that are not intended for reuse, such as O-rings, gaskets, packing, inspection seals, and cotter pins.

Note: If a Replacement Parts List Table needs to indicate configurations or phases (as in figure 13), then a CALS table <**table**> should be used instead of the <**rpltable**> (**standard table**).

b. The part number and quantity required for each part listed.

5.2.14 Work area <**wrkareacd**> cards or zone cards <**zonecd**>. Work area or zone cards (see figures 20 and 21) shall be developed for all card deck types with the exception of periodic maintenance information card decks and preoperational and turnaround checklists. The work area and zone cards shall contain the following information:

a. Illustrations that clearly identify the location of the work areas or zones as identified in the applicable aircraft structural repair manual.

b. Numerically sequenced lists of the work area or zone titles as identified by the illustrations.

5.2.15 Zone title and description cards <**zonetltcd**> (**for aircraft special/preservation/conditional and phased maintenance card decks only**). The cards (see figure 22) shall provide a description of that portion of each work area or zone requiring a zonal inspection. The boundaries of the zonal inspection required are numbered, titled, and may be defined in detail. These cards are required only if a zonal inspection is necessary. The "zones" definition may be presented as expressed below:

Downloaded from http://www.everyspec.com

"ZONES

A work area or zone is a general area, such as "RH Outer Wing" or "Pilot Compartment." Each work area or zone is assigned a prime number in accordance with the aircraft structural manual. Work areas and zones are divided into smaller areas to facilitate accomplishment of zonal inspections. These smaller areas are zones within the prime numbered work area or zone and are assigned a decimal suffix of the prime number."

5.2.16 Zonal inspection criteria card <**zoneinspcd**> (**for aircraft special/preservation/conditional and phased maintenance card decks only**). These cards (see figure 23) are only required if a zonal inspection is necessary. They shall include zonal inspection criteria. The zonal inspection definition may be presented as expressed below:

"ZONAL INSPECTION

A zonal inspection is a general inspection of a specific area of the aircraft or support equipment where an existing scheduled inspection is being accomplished. These inspections are for obvious defects, such as leaks, frayed cables, cracks, corrosion or physical damage and do not require disassembly, special tools or test equipment. Zonal inspections are performed in conjunction with other scheduled maintenance tasks by the rating assigned. For example, an AQ assigned to perform an inspection on a radar antenna might also be assigned a zonal inspection of the entire compartment for obvious defects."

5.2.17 Access panel cards <**accpnlcd**>. Access panel cards (see figures 24 and 25) shall be developed for all card deck types with the exception of the preoperational and turnaround checklists and periodic maintenance information, QEC, and AAE decks. The access panel cards shall contain the following information:

a. Illustrations depicting the views of the aircraft showing the locations of all access panels required to be opened, removed, or inspected.

b. Access panel nomenclature, numbering, and location shall be the same as that used in related TMs.

c. For phase maintenance requirements cards, provide a consolidated numerical list of all access panels required to be opened or removed in order to accomplish the maintenance task requirements listed. Applicable phase cycle is to be annotated accordingly (see figure 25).

5.2.18 Antenna location cards <**antcd**>. Antenna location cards (see figure 26) shall be developed for all special, preservation, conditional, and phased card decks. Antenna location cards shall also be developed for daily SE/ATE card decks and periodic maintenance information card decks for PST. The antenna location cards shall contain the following information:

Downloaded from http://www.everyspec.com

a. Illustrations depicting the views of the aircraft showing the locations of all antennas to be inspected.

b. Antenna nomenclature and location shall be the same as that used in related TMs.

5.2.19 Checklist task cards <**chklst**>. Checklist task cards (see figure 27) shall be developed for aircraft, airborne mine countermeasures, unmanned aerial vehicle turnaround checklists, support equipment, automatic test equipment, and powered surface target preoperational checklists. The checklist task cards shall contain the inspection requirements necessary to inspect for integrity and to perform servicing checks prior to flight or operation. Tasks shall be consecutively numbered and sequentially arranged in logical walkaround order.

5.2.20 Phase sequence control cards <**phsccd**> (**for aircraft phased maintenance card decks only**). A sequence control card(s) (see figure 28) shall be provided for each phase in the phase card deck, which sequences the inspection requirements task cards to be performed. The sequence control card(s) shall be plotted from left to right, starting with the personnel rating and number entry, the prephase entry, and continuing horizontally into the inspection. The graph coordinate for time shall be divided into equal vertical increments of one hour each. Each hourly increment shall be subdivided into five equal parts. EMT shall be presented in multiples of not less than one-tenth hour. The electrical power, hydraulic power, and conditioned air requirements shall indicate ON when required to complete the applicable tasks; OFF when application of power or air would be dangerous to personnel or damaging to the equipment. The Not Applicable (NA) notation shall not be used on the sequence control card(s). Power or air ON or OFF requirements shall be sequenced and grouped whenever possible to avoid frequent changes.

5.2.21 QECA sequence control card(s) <**qecacd**>. A sequence control card(s) (see figure 29) shall be provided in the QECA deck, which sequences the QECA inspection requirements for all airframe applications. The upper portion of the first card only shall display the engine work areas/zones and engine illustration. The lower portion shall be divided into horizontal and vertical time graphs (as shown in the figure 29) to program the personnel requirements and the accomplishment of the QECA inspection requirements. The graph coordinate for time shall be divided into equal vertical increments of one hour each. Each hourly increment shall be subdivided into five equal parts. EMT shall be presented in multiples of not less than one-tenth hour.

5.2.22 Task cards <**tskcd**>. Tasks cards (see figure 30) shall be developed for all card decks with the exception of aircraft, airborne armament equipment, and unmanned aerial equipment periodic maintenance information decks and support equipment and powered surface target preoperational checklists. The task cards shall contain the maintenance requirements for each type of inspection. The task cards shall be prepared as follows:

a. When a task requires the use of one or more skilled assistants whose responsibilities are well defined, the prime card shall indicate which assistants are required and identify the assistant's card number(s) (e.g., "assisted by AMS No. 3, card 19"). When a task requires the use of one or more skilled assistants whose responsibilities are not well defined, the prime card shall

Downloaded from http://www.everyspec.com

include the rating of the assistants and the amount of assist time required (e.g., "Assisted by AMS No. 2 (0.3 hrs"). When a task requires the use of multiple assistants whose responsibilities are of an unskilled nature and not well defined, the prime card shall state, "assistance as required."

b. A list identifying the noun nomenclature and part, type, or specification number of special tools and support equipment required to accomplish all tasks shall precede the consumable/replacement parts list or in the absence of the consumable/replacement parts list, shall precede the first task of the prime card. However, special tools with several alternate part numbers which are easily identified by noun nomenclature do not require further identification by part number (e.g., oil cans, grease guns, torque wrenches, etc.). Common hand tools are not included in this list. If only one special tool or item of support equipment of a particular type is listed, then only its noun nomenclature shall appear in the task or step requiring it. An exception to this requirement is allowed in the QECA cards when due to the close similarity of certain items (such as spanner wrenches and bearing pullers), there is a distinct possibility that the wrong tool could be selected. When more than one special tool or item of support equipment with the same noun nomenclature is listed, each item shall be identified by part, type, or specification number in the tasks or steps to which they apply.

c. A list of consumables and replacement parts necessary to accomplish the task shall precede the first task of the prime card. When more than one consumable or replacement part with the same noun nomenclature is listed, the part, type, or specification number shall be specified in each applicable task or step. If, however, only one consumable or replacement part of a particular nomenclature is listed, then only the nomenclature shall be identified in the applicable task or step. An exception to this requirement is allowed in the QECA cards when, due to the close similarity of certain consumables and replacement parts, there is a distinct possibility that the wrong item could be selected and installed if not fully identified.

d. Inspection requirements, adjustments, checks, tests, and preventive maintenance that are to be performed on aircraft by an intermediate level of maintenance activity shall be sequenced in the appropriate location on the maintenance task and quality assurance cards.

e. Each task and its related steps shall be arranged in a logical sequence to provide a means of performing the requirements in the most accurate and efficient manner. Task cards may be grouped alphabetically by rating or numerically by MOS when more than one rating or MOS is applicable.

f. When two or more assemblies have identical task requirements, only the first assembly's task need be fully identified. Subsequent assemblies requirements shall state "repeat task (*insert number*) through task (*insert number*)."

g. Requirements appearing on each primary card and its associated decimal card(s) shall be limited to a single system, subsystem, assembly, or component. If, however, the requirements to be listed are not extensive enough to warrant individual primary cards, they may be grouped by rating or MOS group; one rating or MOS group per primary card.

Downloaded from http://www.everyspec.com

h. Except for illustration cards, the requirements for electrical power, hydraulic power and conditioned air shall be consistent throughout all maintenance requirements decimal cards as indicated on the prime card.

i. Group requirements by one work area or zone or, when necessary, to a limited number of work areas or zones.

j. Limit the EMT to two hours on the primary card and its associated decimal card(s) when possible.

k. Functions which require a QA inspector to observe the actual accomplishment of the maintenance task (e.g., torquing, assembly, etc.) shall have the following note placed immediately preceding the task to be observed:

"NOTE: QA (*card number*) shall witness (*task/step number*)."

l. Functions which require a QA inspection after accomplishment of the maintenance task shall have the following note placed immediately preceding it:

"NOTE: QA (*card number*) required after accomplishment of (*task/step number*)."

m. If the task is continued on additional card faces, the lower right-hand corner of each card face shall have the word "Continued" (see figures 28 and 30).

n. If the task is completed on one card face, the words "End of card" shall appear in the lower right-hand corner of the card face (see figures 29 and 31).

o. When a blank card face appears, the blank card face shall be assigned a number which shall appear on the preceding card face only (e.g., if card 9.1 is blank, card 9 shall have the notation "(card 9.1 Blank)" in the lower right-hand corner below the "End of card" notation) (see figures 31 and 34).

5.2.22.1 Preservation task card <**prestskcd**> requirements.

a. On preservation task cards, a note shall be added on each prime task card to identify the preservation card sequence.

b. The following note shall be added to the prime task card in the preservation deck listing all special inspection MRCs which must be complied with in conjunction with preservation MRCs:

"NOTE: The following special cards remain valid during short term preservation: (*list applicable cards*)."

Downloaded from http://www.everyspec.com

c. For each special inspection card which remains valid during preservation, the following note shall be added:

"NOTE: The requirements of this card remain valid when the aircraft is in a level I short term preservation status."

5.2.22.2 Assist cards <**asstskcd**>. To supplement the task card requirements described in 5.2.22, assist cards (see figure 31) shall be developed and contain the following information:

a. Step-by-step tasks for supporting the requirements of primary cards when assist responsibilities are well defined and close coordination is required.

b. The rating/MOS and card number of the related primary task shall be designated (e.g., "Assist AD No. 1, card A-16").

c. Separate assist cards shall not be prepared when a task requires the use of an assistant whose responsibilities are of an unskilled nature or are not well defined. The prime card shall include the rating of the assistant and time required in this case.

d. It is not necessary to provide an assist card for one or more assistants of the same RTG/MOS conducting the same task of the prime card.

5.2.22.3 Lubrication task cards <**lubtskcd**>. A lubrication illustration card (see figure 32) shall be used to clarify the lubrication task described on this card. The following information entries shall be included:

a. Item - designates the lubrication points as identified on the lubrication illustration card. Numbers are assigned in a clockwise fashion.

b. Nomenclature - identifies the item being lubricated. The item nomenclature shall be in consonance with applicable source data and existing TMs. When conflict exists, the noun nomenclature presented in the IPB shall take precedence.

c. No. of points - lists the number of lubrication points of each item.

d. Specification - identifies the type of lubrication to be applied to each point.

5.2.23 Illustration cards <**illustcd**>. Illustration cards (see figure 33) shall be developed as necessary to clarify the maintenance or lubrication task. With the exception of the ALSS, illustration cards are not required for periodic maintenance information cards or for turnaround and preoperational checklists. Illustrations, whenever possible, shall be on the same or adjacent card to the text to which they apply. They shall depict the affected area as it appears to the maintenance personnel conducting the associated maintenance task.

Downloaded from http://www.everyspec.com

5.2.23.1 Lubrication illustration cards <**illustcd**>.

a. Lubrication illustrations (see figures 34 and 35) shall include all scheduled lubrication requirements identified on the lubrication task card (refer to 5.2.22.3). Items shall be numerically sequenced in a clockwise fashion around the major assembly to which the lubrication task applies.

b. The lubrication application symbols, abbreviation lubrication specification numbers, and item numbers shall be depicted. The item number may designate more than one point of servicing. Dashed leader lines shall be utilized to designate lubrication points on the opposite side of the assembly.

c. The number of lubrication points listed on the task card shall be the same number as those shown on the illustration card.

d. When two or more assemblies have similar lubrication requirements, a note stating which assembly is shown and which assemblies are similar shall be required for the illustration card (e.g., "left side shown, right side similar").

e. A point of servicing which has been designated by a lubrication symbol in one view shall not be redesignated in another view.

f. Authorized lubrication symbols are illustrated in figure 35.

g. Special notes may appear when necessary to explain special circumstances not otherwise provided by the standard symbols.

5.2.24 QA cards <**qacd**>. With the exception of the ALSS and QECA, QA cards are not required for periodic maintenance information cards or for turnaround and preoperational checklists. QA cards (see figure 36) shall contain the following information:

a. Requirements to inspect systems and components whose integrity has been disturbed during scheduled maintenance and where maintenance, if improperly performed, could cause equipment failure or jeopardize the safety of personnel. QA inspections are performed as necessary either during or after task performance.

b. When a task is referenced to another TM and a QA task is included, there is no requirement for a QA task card when a QA task is called for in the TM.

c. The following note shall be used to refer the QA inspector to the task requiring the inspection:

"NOTE: Refer to task card (*insert card number/step number*)."

Downloaded from http://www.everyspec.com

d. Requirements on QA cards shall be limited to a single system, subsystem, assembly, or component.

e. Card sequencing shall be as follows:

(1) QA cards for the aircraft daily/special/preservation cards shall be sequenced immediately following the task card set for the respective inspection interval. For example, all QA cards required for the 28-day special inspection shall be sequenced behind the last 28-day special task card.

(2) QA cards for each aircraft phase inspection shall be sequenced in back of each phase card set.

(3) QA cards in the QECA cards shall follow their respective card sets (e.g., QA cards pertaining to the engine shall follow the engine task cards; QA cards pertaining to a particular QEC shall follow that QEC's task cards).

(4) QA cards for the airborne armament or special stores daily/special cards shall be sequenced immediately following the card set for the respective inspection interval. For example, all QA cards required for the 28-day special inspection shall be placed behind the last 28-day special task card.

(5) QA cards shall be sequenced in the back of the following cards:

(a) Support equipment periodic maintenance cards.

(b) Powered aerial target acceptance/initial buildup cards.

(c) Powered aerial target prelaunch cards.

(d) Powered aerial target postlaunch/servicing cards.

(e) Powered surface targets periodic maintenance cards.

(6) QA cards for the aviation life support systems periodic maintenance cards shall be sequenced in back of the task cards of each type of equipment covered by the cards.

(7) QA cards for the Peculiar Support Equipment (PSE) periodic maintenance cards shall be sequenced in back of the task cards of each piece/group of equipment covered by the cards.

5.2.25 Aircraft service period adjustment (ASPA) card <**aspacd**> (**Aircraft special inspection card deck only**). When applicable, special inspection requirements shall be provided for preparation of the aircraft for ASPA evaluations and for restoration of the aircraft to a flight-ready condition upon completion of the inspection (see figures 3 and 4).

Downloaded from http://www.everyspec.com

5.3 Card forms and card field details. Figures 1 and 2 illustrate the card fields for the two card forms authorized for periodic maintenance requirements card deck use. See figure 1 for prime and decimal cards and figure 2 for preface and illustration cards. Detailed requirements for each field are described below:

a. Card. Enter the assigned card number. Refer to 5.4 for details concerning card numbering (see block 1, figures 1 and 2).

b. Pub and date. This block shall identify the publication number assigned by the procuring activity. It shall also identify the basic issue or revision date of the cards directly under the publication number (see block 2, figures 1 and 2).

c. Change No. This block shall indicate the number of the most recent revision and shall be on the prime card and may also be on the decimal cards. The block is left blank on basic issue or revision cards (see block 3, figures 1 and 2).

d. Inspection type/interval. This block shall be used to designate the inspection type or interval such as special 7-day, daily, postlaunch, phase, engine (see block 4, figure 1).

e. Elec pwr, hyd pwr, and cond air. These blocks shall indicate the requirements for electrical power, hydraulic power, and conditioned air. Requirements shall indicate ON when required to complete the tasks; OFF when application would be dangerous to personnel or damaging to the equipment; and NA (not applicable) when power is not required and its application would not be dangerous to personnel or damaging to the equipment. The status of electrical power, hydraulic power and conditioned air on decimal cards shall be consistent with the requirements indicated on the prime card (see block 5, figure 1).

f. Time. This block shall be used to indicate the total EMT necessary to accomplish the requirements of the prime card and decimal card(s). Time to perform referenced requirements shall be included. EMT is expressed in hours and tenths of hours and shall be on the prime card and may also be on the decimal cards. The time required to obtain tools, equipment, parts or consumables, and time lost due to adverse working conditions or corrections of discrepancies shall not be included. If an assistant is required, his total time required shall be indicated in hours and tenths of hours in parenthesis in the upper right-hand corner following the assistant's rating as shown in figures 3 and 4 (also see figure 1, block 6).

g. RTG and NO (rating and number). This block shall be used to assign the Navy rating which is responsible for the task in accordance with NAVPERS 18068, Navy Enlisted Manpower and Personnel Classifications and Occupational Standards. When a plane captain, flight engineer, or quality assurance inspector is required, they shall be identified as PC, FE, or QA in accordance with COMNAVAIRFORINST 4790.2. In addition to the rate, a number shall be assigned to identify individuals within each of the rates required to complete the inspection.

Note: The number assigned identifying individuals required to accomplish specific tasks does not relate to skill levels. These numbers are used for task sequencing and workload control purposes. For inspection utilizing sequence control cards(s), the rate and number assigned to the

Downloaded from http://www.everyspec.com

task card(s) shall correspond with those listed on the sequence control card(s) (see figures 28 and 29). The block shall remain blank if the task does not apply to Navy equipment (see block 7, figure 1).

h. MOS and NO (Military Occupational Specialty and Number). Marine Corps MOS numbers shall be assigned in this block in accordance with MCO 1200.17 Military Occupational Specialties Manual (MOS Manual) to identify the general technical specialty responsible for accomplishing the task. When a plane captain, flight engineer, or quality assurance inspector is required, they shall be identified as PC, FE, or QA in accordance with COMNAVAIRFORINST 4790.2. In addition to the MOS, a number shall be assigned to identify individuals within each of the occupational specialties required to complete the inspection. These numbers are used for task sequencing and workload control purposes. For inspections utilizing sequence control cards(s), the MOS and number assigned on the task card(s) shall correspond with those listed on the sequence control card(s) (see figures 28 and 29). The block shall remain blank if the task does not apply to Marine Corps equipment (see block 8, figure 1).

i. Task. This block shall contain the descriptive title identifying the task(s) on the card. This block shall be left blank on daily cards (see block 9, figure 1).

j. Work area/zone field. This field shall identify the work area or zone assigned from the work area or zone illustration. When an inspection requirement affects more than one work area or zone, all work areas or zones so affected shall be identified (see block 10, figure 1).

k. Corrosion inspection field. Entries shall be provided in this field in all cards (except checklists and PMIC) to identify corrosion inspection requirements. These requirements shall be identified by the symbol "C" in this column (see block 11, figure 1).

l. Inspection requirements. This area shall provide the task description. Each task and its related steps shall be arranged in a logical sequence to ensure accurate and efficient accomplishment of the inspection requirement (refer to 5.2.22) (see block 12, figure 1).

m. Card title. This block shall provide the descriptive title of the preface, illustration, and PMIC cards (see block 13, figure 2).

n. Inspection information. This area shall provide preliminary maintenance information, illustrations, and PMIC information (see block 14, figure 2).

5.4 Card numbering.

5.4.1 PMIC card decks.

a. The title card shall not be numbered.

b. "A" cards shall be sequenced alphabetically using capitalized letters. Card A shall be printed on the back of the title card.

Downloaded from http://www.everyspec.com

c. List of Technical Publications Deficiency Reports Incorporated card (TPDR card) shall follow the "A" cards and be numbered TPDR-1, TPDR-2, etc.

d. The preface card (introduction card) shall be numbered using the lower case Roman numeral i.

e. When hazardous materials are addressed in the card, the cards shall be numbered using the prefix "AHMWS" followed by consecutive numbers (e.g., "AHMWS-1", "AHMWS-2", etc.). Refer to MIL-STD-3001-1, Appendix B.

f. All cards, except the title, "A" card, TPDR card and preface cards, shall be assigned consecutive Arabic numerals.

g. The addition of new cards to an existing manual shall be accomplished in accordance with 5.4.8.

5.4.2 Turnaround and preoperational checklists.

a. The title/introduction/application page shall not be numbered.

b. Task pages shall be assigned consecutive Arabic numerals as illustrated in figure 27.

5.4.3 Daily, special, preservation, and conditional card decks. These card decks shall be numbered as follows:

a. The title card shall not be numbered.

b. "A" cards shall be sequenced alphabetically using capitalized letters. Card A shall be printed on the back of the title card.

c. List of Technical Publication Deficiency Reports Incorporated card (TPDR card) shall follow the "A" cards and be numbered TPDR-1, TPDR-2, etc.

d. When hazardous materials are addressed in the manual, the cards shall be numbered using the prefix "AHMWS" followed by consecutive numbers (e.g., "AHMWS-1," "AHMWS-2," etc.). Refer to MIL-STD-3001-1, Appendix B.

e. Preface cards (does not include title card, "A" cards or TPDR cards) shall be consecutively numbered using lower case Roman numerals.

f. Task cards shall be assigned consecutive Arabic numerals. Prime cards shall be sequenced using integers (e.g., 1, 2, 3, 4, etc.). Decimal cards, when required, shall use decimal suffixes (e.g., 1.1, 1.2, or 2.1, 2.2, 2.3, etc.). The word "Continued" shall be printed in the lower right corner of the card to indicate that the task continues to a successive decimal card. The words "End of card" shall be located in the lower right corner of the card to indicate that the task

Downloaded from http://www.everyspec.com

requirements have been completed and that no decimal card follows. A prime card shall not be printed on the reverse side of a decimal card but shall be established on a new card. Blank card faces generated by this restriction shall not be numbered. The words "(card (card number) Blank)" shall be printed in the lower right corner of a card to indicate that the succeeding card face is blank. See figure 30 for an example of task card numbering.

5.4.4 Phased maintenance requirements card deck. This deck shall be numbered as follows:

a. The title card and phase cover cards shall not be numbered.

b. "A" cards shall be sequenced alphabetically using capitalized letters. Card A shall be printed on the back of the title card.

c. List of Technical Publications Deficiency Reports Incorporated card (TPDR card) shall follow the "A" cards and be numbered TPDR-1, TPDR-2, etc.

d. When hazardous materials are addressed in the manual, the cards shall be numbered using the prefix "AHMWS" followed by consecutive numbers (e.g., "AHMWS-1," "AHMWS-2," etc.). Refer to MIL-STD-3001-1, Appendix B.

e. Preface cards (does not include title card, "A" cards or TPDR card) shall be consecutively numbered using lower case Roman numerals.

f. Task cards within each phase shall be grouped alphabetically by rating or numerically by MOS. They shall be assigned consecutive Arabic numerals preceded by the appropriate phase designator (e.g., A-1, A-2 or B-1, B-1.1, B-1.2, etc.). Prime cards shall be sequenced using integers (e.g., A-1, A-2, A-3, etc.). Decimal cards, where required, shall use decimal suffixes (e.g., A-1.1, A-1.2 or B-2.1, B-2.2, B-2.3, etc.). The word "Continued" shall be printed in the lower right corner of the card to indicate that the task continues to a successive decimal card. The words "End of card" shall be printed in the lower right corner of the card to indicate that the task requirements have been completed and that no decimal card follows. A prime card shall not be printed on the reverse side of a decimal card but shall be established on a new card. Blank card faces generated by this restriction shall not be numbered. The words "(card (card number) Blank)" shall be printed in the lower right corner of a card to indicate that the succeeding card face is blank. See figure 30 for an example of phase task card numbering.

5.4.5 QECA deck. Engine cards shall be numbered as outlined in 5.4.3. Consecutive hundred series cards shall be assigned to each QEC required. If the engine cards are numbered 1 through 69, for example, the QEC cards applicable to the first airframe would be numbered starting with 101, the QEC cards applicable to the second airframe would be numbered starting with 201, etc.

5.4.6 ALSS deck. Cards shall be numbered as outlined in 5.4.3 with the following exception: Each type of equipment being inspected shall be assigned consecutive hundred series cards. For example, the LR-1 life raft would be assigned task card numbers 101-199; the LRU-12/A (MK-4) life raft would be assigned task card numbers 201-299, etc.

Downloaded from http://www.everyspec.com

5.4.7 Aircraft PSE deck. Cards shall be numbered as outlined in 5.4.3 with the following exception: Each piece or group of peculiar support equipment being inspected shall be assigned consecutive hundred series cards. For example, the AV 57-213, AV 57-214, and AV 57-217 wedges are a group of PSE and would be assigned task card numbers 101-199.

5.4.8 Added cards. When a new card is added to an existing Periodic Maintenance Requirements Manual (PMRM), the new card shall be identified by using the appropriate existing card number plus an alphabetical suffix. For example, new cards inserted between task cards 12.1 and 12.2 would be identified as 12.1A, 12.1B, 12.1C, etc. Similarly, a new primary card added between cards 15 and 16 would be identified as card 15A. When cards are added to preface cards (introduction), the added preface card(s) shall be identified by using the appropriate Roman numeral plus an alphabetical suffix.

5.4.9 Deleted cards. When card number continuity is broken by deletion of a card, a statement indicating the deletion shall be placed in the bottom margin of the preceding card (e.g., "all data on card (*insert card number*), including figure number (*insert figure number*) deleted"). This also applies when two back-to-back cards are deleted.

5.4.10 Renumbering. During a revision, all preface, task, and illustration cards shall be renumbered, as necessary, to eliminate card number alphabetic suffixes and to reestablish the correct card sequence.

5.5 Changes and revisions. PMRC sets covered herein shall be changed or revised to reflect all approved changes. Checklists shall always be revised, not changed.

5.5.1 Changes. A change is any alteration of the cards already in existence. It is accomplished by replacement, addition, or deletion of cards, including backup cards, but not sufficient in number to require a complete revision of the cards. Vertical change bars or the letter "R" shall be used to highlight changes. Change bars or symbols shall not be depicted on a complete revision.

5.5.2 Revisions. A PMRC deck shall be revised when the percentage of an anticipated change plus all previously incorporated changes affect a total of sixty percent of the card faces in the PMRM. The following criteria shall be used to determine the need for a revision:

a. A change is defined as any information that has been incorporated, deleted, or resequenced in a PMRC deck since the last revision.

b. Any change to a card face except for correction of typographical errors shall be counted as one card face.

c. Each card face affected shall be counted as one card change.

d. Arabic numbered cards only shall be counted for change purposes.

e. Percentage of change shall be computed utilizing the following formula:

Downloaded from http://www.everyspec.com

$$\frac{\text{Number of Arabic numbered card face changes}}{\text{Number of Arabic numbered cards}} \times 100 = \text{percent of change}$$

Example: number of Arabic numbered card face changes (200) divided by the total number of Arabic numbered cards in the manual (300) multiplied by 100 equals 66.66 percent change.

f. Each card added or deleted shall count as one card face change. For example, if 100 new cards are added while 100 cards are deleted, the total number of cards changed shall equal 200 cards.

g. Change symbols shall not be required for revised card decks.

6. NOTES

The notes in Section 6 of MIL-STD-3001-1 apply to this Part.

Downloaded from http://www.everyspec.com

CARD 1		Date 2		CHANGE NO. 3	4	
WORK AREA /ZONE	C R S N	TIME 6	RTG. NO. 7	MOS. NO. 8	9	ELEC PWR 5 HYD PWR 5 COND AIR 5
10	11	12				
						End of Card

(Card 1.1 Blank)

FIGURE 1. Example of prime and decimal card format.

CARD 1	Date 2	CHANGE NO. 3	13
14			
			End of Card

FIGURE 2. Example of preface and illustration card format.

Downloaded from http://www.everyspec.com

CARD 101.0		AG–500QA-MRC-000 DATE 1 OCTOBER 2002		CHANGE NO. 2	ASPA	
WORK AREA/ ZONE	CRSN	TIME 4.9	RTG. NO. AMS 1	MOS. NO. 6042 1	AIRCRAFT PREPARATION	ELEC PWR ON HYD PWR ON COND AIR ON
ALL		**Assisted by:** AMH No.1 (1.4 Hr); AD No.1 (4.9 Hr) PC NO.1 (3.6 Hr); AD No.2 (4.9 Hr) PC NO.2 (4.1 Hr); AO No.1 (1.7 Hr) PC NO.3 (4.1 Hr); AT No.1 (1.3 Hr) **SPECIAL TOOLS/SUPPORT EQUIPMENT REQUIRED** Cart, Air Conditioning — NR5C — - Lock, Speed Brake — A51S61800–3 — - Power Source, Electric — NC8A — - Power Source, Hydraulic — AHT-64 — - **CONSUMABLE MAINTENANCE MATERIAL LIST** Tape, Pressure Sensitive — MIL-T-22085 Type II 1. Aircraft service period adjustment inspection: a. Make aircraft safe for maintenance IAW NAVAIR 01–F14AAA-2–1, WP 020 00 AND WP 021 00. Continued				

FIGURE 3. Example of an aircraft service period adjustment (ASPA) requirements card for aircraft preparation.

CARD 1.0		AG–500QA-MRC-000 DATE 1 OCTOBER 2002		CHANGE NO. 2	ASPA	
WORK AREA/ ZONE	CRSN	TIME 4.7	RTG. NO. AMS 1	MOS. NO. 6042 1	AIRCRAFT RESTORATION	ELEC PWR ON HYD PWR ON COND AIR NA
ALL		**Assisted by:** AMH No.1 (2.5 Hr); PC No.1 (3.0 Hr) AT No.1 (2.1 Hr); AD No.1 (2.1 Hr) AD No.2 (4.5 Hr); AO No.2 (2.7 Hr) **SPECIAL TOOLS/SUPPORT EQUIPMENT REQUIRED** Power Source, Electric — NC8A — - Power Source, Hydraulic — AHT-64 — - **CONSUMABLE MAINTENANCE MATERIAL LIST** Cleaner, Lubricant/Preservative — MIL-L-63460 Compound, Corrosion Preventative — MIL-C-16173 Grade 4 Oil, Lubricating — VV-L-800 1. Completion of ASPA: a. Close nose radome. b. Install left forward fixed cowl 5212–1. Continued				

FIGURE 4. Example of an aircraft service period adjustment (ASPA) requirement card for aircraft restoration.

Downloaded from http://www.everyspec.com

CARD v	NAVAIR 17–600–117–6–2 DATE 1 OCTOBER 2002	CHANGE NO.	DEFINITIONS

DEFINITIONS

CAUTION	Indicates danger to the system. The caution precedes the item to which it refers.
DAMAGE	A harmful condition caused by an abnormal force or object
WARNING	Indicates danger to personnel. The warning precedes the item to which it refers.
EVIDENCE	An indication of an existing condition such as hydraulic fluid dripping from the lower wing surface is evidence of a leak.
NOTE	An information item. The note precedes or follows the item to which it refers.
OBVIOUS	Easily seen or understood, clear to the eye or mind, not to be doubted.
SECURITY	An item firmly, positively, and safely attached in the approved manner.
SPECIFIED	Refer to a definite amount, operation or limitation.
VISIBLE or EXPOSED	The term applied when inspection requires no further disassembly or movement of equipment and no removal of doors or panels other than that specifically detailed.
DAMAGE	A harmful condition caused by an abnormal force or object
WARNING	Indicates danger to personnel. The warning precedes the item to which it refers.

Continued

FIGURE 5. Example of definitions card.

CARD i	A1-AV8BB-MRC-200 DATE 1 OCTOBER 2002	CHANGE NO.	REMOVAL/REPLACEMENT SCHEDULE AND SCHEDULED REMOVAL COMPONENT (SRC) CARD REQUIREMENTS

Removal/replacement schedule and Scheduled Removal Component (SRC) card requirements items that have an approved mandatory removal/replacement interval and shall be removed and replaced with serviceable items at the specified interval. Except for pyrotechnics, cartridge, cartridge actuating devices, arresting gear, and landing gear, an allowance of plus or minus 10% of the maximum operating time is authorized. An allowance of plus or minus 10% is authorized for engines, engine components, and accessories unless otherwise noted in the remarks column. Pyrotechnics, cartridge, cartridge actuating devices, arresting gear, and landing gear, shall be removed at the designated removal interval. Replacement items are indicated in unit operating hours, calendar time cycles, or events, and arranged by aircraft/engine system. Items preceded by an asterisk (*) require a Scheduled Removal Component (SRC) card.

SAFETY AND SURVIVAL

NOMENCLATURE	PART/MODEL NUMBER	DISPOSITION	REMOVAL INTERVAL	REMARKS
Acceptor Assembly, Interconnect	819671-103	Retire	NAVAIR 11-100-1.1	(AV-8B) See Note [1]
*Acoustic Beacon, Underwater	DK120	Retire	72 months from date of manufacture.	
Battery SEAWARS (PHSRU)	852AS102	Retire	NAVAIR 13-1-6.2	

Continued

FIGURE 6. Example of a removal/replacement schedule and special tracking requirements card.

Downloaded from http://www.everyspec.com

CARD iii	A1-AV8BB-MRC-200 DATE 1 OCTOBER 2002	CHANGE NO.	REMOVAL/REPLACEMENT SCHEDULE AND SCHEDULED REMOVAL COMPONENT (SRC) CARD REQUIREMENTS

SAFETY AND SURVIVAL (CONT)

NOMENCLATURE	PART/MODEL NUMBER	DISPOSITION	REMOVAL INTERVAL	REMARKS
*Battery, Thermal (Emergency Landing Gear)	106930	Retire	180 months from date of manufacture.	See Note [8]
Cartridge, Impulse (2)	1092-20 (M647) (25017-1)	Retire	NAVAIR 11-100-1.1	

NOTES

1. Part of (819675) Assy, Actuator, Mechanical, ATU-96A 837AS120 (XW77).
2. Part of K819900-3 Kit Assembly (MG39).
3. Low Altitude Airspeed Sensor also installed in aft cockpit on TAV-8B aircraft.
4. Service life is based upon date that sensor tip is installed into Oxygen Monitor, not on date of installation of Oxygen Monitor in aircraft.
5. Component 819900-5 is usable on 161573 THRU 163519.
6. Component 51228-843 is usable on 161573 AND UP.

Continued

FIGURE 6. Example of removal/replacement schedule and special tracking requirements card - Continued.

CARD vii	A1-AV8BB-MRC-200 DATE 1 OCTOBER 2002	CHANGE NO.	MAINTENANCE REQUIREMENT SYSTEM INDEX

This index lists by system those requirements to be done by the operating activity. The right column indicates the maintenance requirement card number on which the requirement is listed. The code letters indicate the manual as follows:

T	Turnaround	PH	Phased
D	Daily	COND	Conditional
S[1]	Special	PSVTN	Preservation

1. The number immediately following "S" indicates the interval of inspection in days/flight hours, operational hours, cycles; events.

Index of Systems

System Codes	System	PMIC Card
11	Airframe	82
13	Landing Gear	83
14	Flight Controls	84
17	Fuselage Compartments	85
24	Auxiliary Power Plant (Airborne)	86

Continued

FIGURE 7. Example of an inspection requirement card.

Downloaded from http://www.everyspec.com

CARD viii	A1-AV8BB-MRC-200 DATE 1 OCTOBER 2002	CHANGE NO.	MAINTENANCE REQUIREMENT SYSTEM INDEX

Inspection Requirements by System

AIRFRAME (System 11)	Card
1. Access door, closure	PH-A-4, PH-B-4, PH-C-4, PH-D-4
2. Access door, opening	PH-A-3, PH-B-3, PH-C-3, PH-D-3
3. Aircraft cleaning	S14-15 thru 19, S14-22, PSVTN-136
4. Aircraft preservation	PSVTN-134 thru 146
5. Airframe	S28-28, S28-29, S56-42, S60-84, PH-A-8, PH-B-7, PH-C-7, PH-D-7, PSVTN-140
6. Aux Door Wedge Inspection	PH-A-34, PH-C-34
LANDING GEAR (System 13)	Card
1. Axle	PH-A-12, PH-A-27, PH-C-11, PH-C-29
2. Brake accumulator	D-2, D-10
3. Brakes	T-10
4. Landing gear assy	T-4, T-7, T-9, D-6 thru 8, D-10, S56-42, PSVTN-148, PSVTN-150, PH-B-42, PH-D-41

End of Card

FIGURE 7. Example of an inspection requirement index card - Continued.

CARD xiv	A1-AV8BB-MRC-200 DATE 1 OCTOBER 2002	CHANGE NO.	CONDITIONAL INSPECTION LISTING

Condition	Task Requirement
AIRFRAME (SYSTEM 11)	
1. When an excess G flight has been reported.	Inspect structure for damage. Refer to A1-AV8BB-GAI-400, WP004 00.
2. When an overweight condition has been reported.	Inspect structure for damage. Refer to A1-AV8BB-GAI-400, WP005 00.
3. When structural overtemperature has been reported.	Inspect structure for damage. Refer to A1-AV8BB-GAI-400, WP006 00.
4. When lighting strike/static discharge has been reported.	Inspect structure for damage. Refer to A1-AV8BB-GAI-400, WP007 00.
5. When an aerodynamic performance problem has been reported.	Inspect alignment of aircraft. Refer to A1-AV8BB-GAI-400, WP008 00.
6. When a wheels up landing has been reported.	Inspect aircraft for damage. Refer to A1-AV8BB-GAI-400, WP003 01.
7. When a violent departure from controlled flight has been reported.	Inspect structure for damage. Refer to A1-AV8BB-GAI-400, WP014 00.

Continued

FIGURE 8. Example of a conditional inspection listing card.

Downloaded from http://www.everyspec.com

CARD xvii	A1-AV8BB-MRC-200 DATE 1 OCTOBER 2002	CHANGE NO.	Phase Change Implementation

PHASE CHANGE IMPLEMENTATION CARD

To prevent under-inspection of critica systems during implementation of this publication, perform the additional tasks as listed in the tabe beow.

Use the table for one phase interval for each aircraft.

This card shal be removed from the manual and discarded after all aircraft have completed at least one phase inspection interval.

NOTE: This card implements the engine and QEC requirements into the phase inspection manual.

	PHASE					
	A	B	C	D	E	F
CARDS TO BE COMPLIED WITH	B-10, B-23, B-24, B-25	A-11, A-15, A-18, A-41	A-11, A-41, B-10, B-11	A-11, A-41, B-10, B-23	A-11, A-15, A-18, A-41	A-11, A-15, A-18, A-41

End of Card

FIGURE 9. Example of a phase change implementation card.

CARD ii	AG–500QA-MRC-000 DATE 1 OCTOBER 2002	CHANGE NO.	ABBREVIATIONS AND INDEX

ABBREVIATIONS

ABBREVIATION	DEFINITION
TSN	Time Since New
VAC	Volts Alternating Current
WORD	Wind Oriented Rocket Deployment

INDEX

Inspection Type	Card Numbers	Inspection Type	Card Numbers
Special (see NOTE) LR-1	101 — 115.1	Special 225 Day (cont)	401–420.1
Special 225 Day	201 — 207	LRU-13/A	501–516
LRU-7/P	301 — 313.3	LRU-14/A	601–609.2
LRU-12/A		LRU-15/A	

NOTE: Maintenance interval dependent on maintenance interval of Seat Survival Kit in which the LR-1 is installed. The following Seat Survival Kits are applicable:
SKU-2/A
SKU-3/A
SKU-4/A

End of Card (Card iii Blank)

FIGURE 10. Example of an abbreviations and index card for aircrew life support systems card deck.

Downloaded from http://www.everyspec.com

CARD vii	AG–500QA-MRC-000 DATE 1 OCTOBER 2002	CHANGE NO.	ABBREVIATIONS AND INDEX

ABBREVIATIONS

ABBREVIATION	DEFINITION
AESR	Aeronautical Equipment Service Record
AMMO	Ammunition
HAA	Height Adjustment Actuator
JOAP	Joint Oil Analysis Program

INDEX

Part No./Model No.	Nomenclature	Inspection Type	Card Numbers
AV 57–213, AV 57–214, AV 57–217	Wedges, 20, 30, and 10	364 Day	401–425
DMC 420, DMC 420A	Tool Kit, Connector Repair	364 Day	501–502
D7301	Plug, Drain Hose	364 Day	901–902

End of Card

FIGURE 11. Example of an abbreviations and index card for PSE card deck.

CARD ii	A1-AV8BB-MRC-300 DATE 15 September 2001	CHANGE NO.	ABBREVIATIONS/INDEX/CHECKFLIGHT REQUIREMENTS

ABBREVIATIONS

ABBREVIATION	DEFINITION
SLD	Short Lift Dry
TSHS	Time Since Hot Section
TSN	Time Since New
VAC	Volts Alternating Current
WORD	Wind Oriented Rocket Deployment
WP	Work Package
WRLG	Wing Retractable Landing Gear

PHASED MANUAL INDEX

Inspection	Application Cards	Checkflight Requirement Cards
PHASE A	A-1 through A-50	A-20
PHASE B	B-1 through B-58	B-7
PHASE C	C-1 through C-68	C-12

End of Card

FIGURE 12. Example of an abbreviations, index, and checkflight requirement card for phased maintenance checklist.

Downloaded from http://www.everyspec.com

CARD viii	AG–500QA-MRC-000 DATE 1 OCTOBER 2002	CHANGE NO.	SPECIAL TOOLS/SUPPORT EQUIPMENT REQUIRED

The following Special tools and Support Equipment are necessary to accomplish the requirements contained in this manual.

NOTE: Equipment configuration is identified under the Quantity Required column as follows:

A LRU-1
B LRU-7/P
C LRU-12/A
D LRU-13/A
E LRU-14/A

Nomenclature	Part No, Type or Model No	Quantity Required A	B	C	D	E
Air Source, Low Pressure Dry	—	1	1	1	1	1
Gage, Depth	GGG-C-105 Type III	1	0	1	1	0
Glass, Magnifying	GG-M-95	1	1	1	1	1
Kit, Contamination Analysis	57L414	1	1	2	2	3
Kit, Inflator, Assembly	MOO-8348/1–1	1	0	0	1	0
Light, High Intensity	—					

End of Card

FIGURE 13. Example of a special tools/support equipment card (or replacement parts card) for aircrew life support systems or QECA card deck.

CARD A-i	A1-AV8BB-MRC-300 DATE 15 September 2001	CHANGE NO. 3	SPECIAL TOOLS/SUPPORT EQUIPMENT LIST

SPECIAL TOOLS/SUPPORT EQUIPMENT REQUIRED

The following special tools and support equipment are necessary to accomplish the requirements contained in this manual.

Nomenclature	Part No, Type or Model No	Quantity Required
Cleaner, Vacuum		1
Compressor, Reciprocating	PD183 REV1	1
Compressor, Wash and Preservation Assembly	(PEC-9972) S3S13473000	1
Container, Clear Dry Glass,	1 Quart	1
Container, Oil Drain		1
Container, Transport		1
Container (4 oz. minimum capacity)		1
Control Assy, Height Adjustment Actuator	472P950E057-1	1
Cord Assembly, Electrical Communication	REDAR-B10135-1	1

End of Card

FIGURE 14. Example of a special tools/support equipment card for support equipment card deck.

Downloaded from http://www.everyspec.com

CARD ix	AG–500QA-MRC-000 DATE 1 OCTOBER 2002	CHANGE NO.	CONSUMABLE MAINTENANCE MATERIALS LIST

The following consumable maintenance materials are necessary to accomplish the requirements contained in this manual.

NOTE: Equipment configuration is identified under the Material Required column as follows:

A LRU-1 C LRU-12/A E LRU-14/A
B LRU-7/P D LRU-13/A

Nomenclature	Part No, Type or Model No	Material Required A	B	C	D	E	HMWS Index No.
Adhesive, Polychloroprene	MIL-A-5540	X	X	X	X	X	
Cord, Nylon, Type I	MIL-C-5040	X	X	X	X	X	
Ink, Drawing, Waterproof, Yellow	TT-I-531	X	X	X	X	X	
Ink, Laundry, Black	TT-I-542	X	X				
Soap Solution	—	X	X	X	X	X	

End of Card

FIGURE 15. Example of a consumable maintenance material list card for aircrew life support systems or QECA card deck.

CARD iii	A1-AV8BB-MRC-300 DATE 15 September 2001	CHANGE NO.	CONSUMABLE MAINTENANCE MATERIAL LIST

The following consumable maintenance materials are necessary to accomplish the requirements contained in this manual.

NOTE: Equipment configuration is identified under the Quantity Required column as follows:

Nomenclature	Part No, Type or Specification No	Required by Phase(s) A	B	C	D	E	F	HMWS Index No.
Barrier Material, Greaseproofed, Waterproofed	MIL-B-121	X	X	X	X	X	X	
Cloth, Disposable	—	X	X	X	X	X	X	
Compound, Corrosion Preventive	MIL-C-16173 Grade 1	X	X	X	X	X	X	
Compound, Corrosion Preventive	MIL-C-16173 Grade 4	X	X	X	X	X	X	
Compound, Sealing	MIL-S-8802 Class B	X	X	X	X	X	X	
Fluid, Hydraulic	MIL-H-83282	X	0	X	0	X	0	
Grease, General Purpose, Wide Temperature Range	MIL-G-81322	X	X	X	X	X	X	
Lockwire	MS20995C20	X	X	X	X	X	X	
Lockwire	MS20995C32	X	X	X	X	X	X	

End of Card

FIGURE 16. Example of a consumable maintenance material list card for aircraft phased maintenance requirements checklist.

Downloaded from http://www.everyspec.com

CARD A-ii	A1-AV8BB-MRC-300 DATE 15 September 2001	CHANGE NO. 2	CONSUMABLE MAINTENANCE MATERIAL LIST

CONSUMABLE MAINTENANCE MATERIAL LIST

The following consumable maintenance materials are necessary to accomplish the requirements contained in this manual.

Nomenclature	Part No, Type or Specification No	HMWS Index No.
Alcohol, Denatured Ethyl	OE760 S-738[1]	
Aliphatic Naphtha	TT-N-95, Type 2	
Bags, Plastic		
Brush, Aircraft Cleaning, Metal Brightening	MIL-B-23958, Type 4 Style 1	
Brush, Stiff Wire		
Cloth, Cheesecloth	CCC-C-440 Type 1 Class 1	
Cloth, Cleaning	CCC-C-46, Type 1, Class 4	
Cloth, Lint-Free		
Compound, Antiseize	51102	
Compound, Cleaning	MIL-C-85570	

Continued

FIGURE 17. Example of a consumable maintenance material list card for support equipment card deck.

CARD iv	A1-AV8BB-MRC-300 DATE 15 September 2001	CHANGE NO.	REPLACEMENT PARTS LIST

The following replacement parts are necessary to accomplish the requirements contained in this manual.

Nomenclature	Part No, Type or Specification No	Quantity Required A	B	C	D	E	F	HMWS Index No.
Element, Filter (Main Hydraulic)	AN6235–4A	0	2	0	2	0	2	
Element, Filter (Res Vent)	AN6237–1	1	0	1	0	1	0	
Gasket, Front Sump Strainer	23D63	2	2	2	2	2	2	
Gasket, Oil Strainer	149108	2	2	2	2	2	2	
Gasket, Rear Sump Strainer	23D51	2	2	2	2	2	2	
Gasket, Rocker Box Strainer	23D52	2	2	2	2	2	2	
Nuts, Castellated, Self-locking	MS17825–S	4	4	4	4	4	4	
Packing, "O" Ring	AN6227B19	2	0	2	0	2	0	
Packing, "O" Ring	MS28775–015	2	0	2	0	2	0	
Packing, "O" Ring	MS29513–018	0	2	0	2	0	2	

End of Card

FIGURE 18. Example of a replacement parts list card for phased maintenance checklist.

Downloaded from http://www.everyspec.com

CARD A-vi	A1-AV8BB-MRC-300 DATE 15 September 2001	CHANGE NO.	REPLACEMENT PARTS LIST

REPLACEMENT PARTS LIST

The following replacement parts are necessary to accomplish the requirements contained in this manual.

Nomenclature	Part No, Type or Specification No	Quantity Required
Canister, Desiccant - Heat Exchanger	TA641	1
Desiccants	TA433-100	1
Desiccant, Activated (50 lb.)	MIL-D-3464 Type 3	1
Gasket (Radar)	JW136766-2	1
Gasket (Radar)	7M564-16	1
Indicator, Humidity	MS20003-2	2
Lockwire	MS20995C32	
Metaseal	HTE 655-45-3052A	4
Nuts	F42NKE-054	4
Packing	AS43013-011	4
Pin, Cotter	MS24665-283	1

End of Card

FIGURE 19. Example of a replacement parts list card for support equipment card decks.

CARD xiii	AG–500QA-MRC-000 DATE 1 OCTOBER 2002	CHANGE NO.	WORK AREAS

WORK AREAS

1. Radome & Radar Compartment
2. Fwd Fuselage
3. Fwd Cockpit
4. Aft Cockpit
5. Upper RH Wing
6. Aft Fuselage & Empennage
7. RH Engine
8. LH Engine
9. Upper LH Wing
10. Center Fuselage
11. LH Intake Duct & Cavity

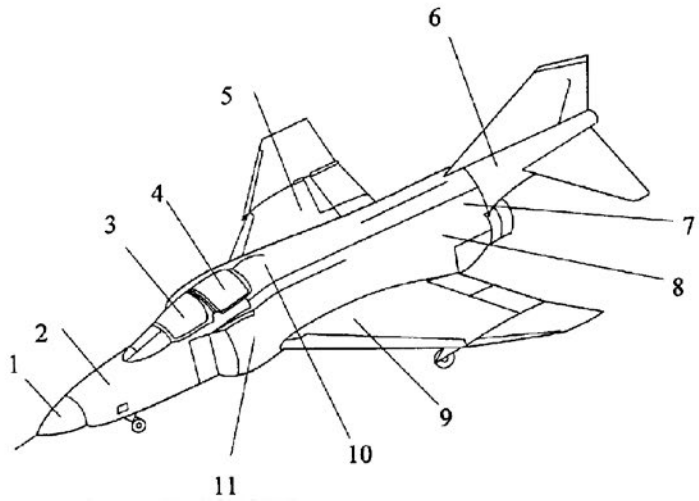

End of Card

FIGURE 20. Example of work area or zone cards.

Downloaded from http://www.everyspec.com

CARD xiii	AG–500QA-MRC-000 DATE 1 OCTOBER 2002	CHANGE NO.	ZONES

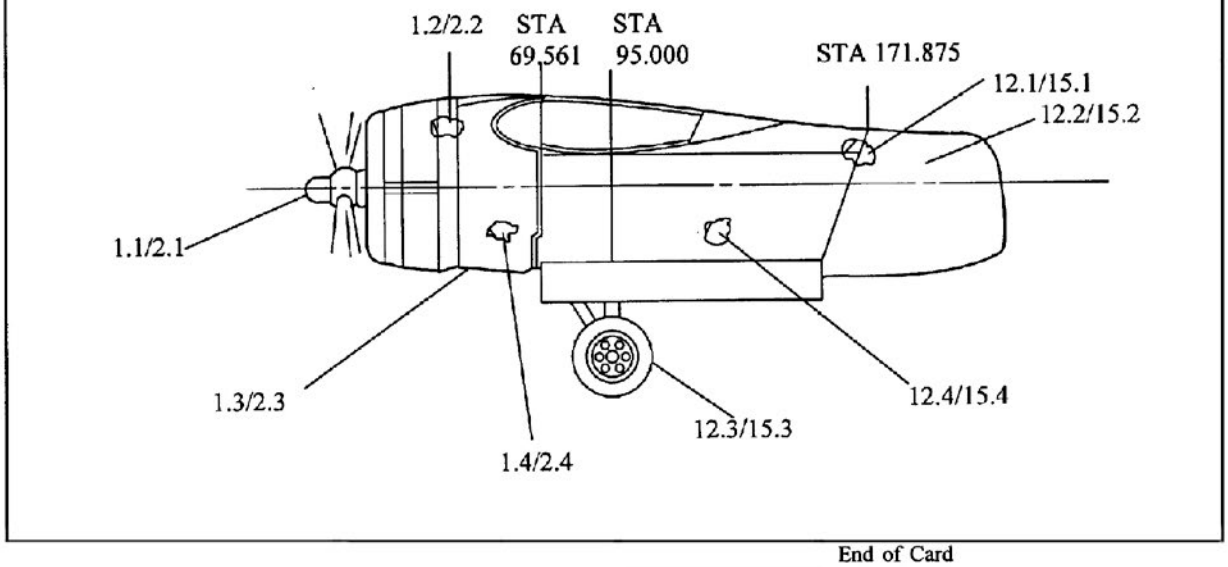

End of Card

FIGURE 21. Example of a zones card.

CARD A-vii	A1-AV8BB-MRC-300 DATE 15 September 2001	CHANGE NO.	ZONE TITLE AND DESCRIPTION

ZONES

A work area or zone is a general area, such as "RH Outer Wing" or "pilot compartment." Each work area or zone is assigned a prime number in accordance with the aircraft structural manual. Work areas and zones are divided into smaller areas to facilitate accomplishment of zonal inspections. These smaller areas are zones within the prime numbered work area or zone and are assigned a decimal suffix of the prime number.

ZONE, TITLE AND DESCRIPTION

9	Whatever zone 1 is	
9.1	Cooling Turbine Air–Conditioning Cavity	This zone is the cooling turbine/air--conditioning equipment cavity from approximately FS--143 to FS--227.25. It is defined by rigid internal structure.
4.10	Wing Flap Cavity	This zone consists of a flap cavity, skin, rivets, rubber seal and carriage brackets, between WS--293.0 and WS--65.0.

End of Card

FIGURE 22. Example of a zone title and description card.

Downloaded from http://www.everyspec.com

CARD A-viii	A1-AV8BB-MRC-300 DATE 15 September 2001	CHANGE NO.	ZONE INSPECTION CRITERIA

ZONAL INSPECTION DEFINITION

A zonal inspection is a general inspection of a specific area of aircraft or support equipment where an existing scheduled inspection is being accomplished. These inspections are for obvious defects, such as leaks, frayed cables, cracks, corrosion or physical damage and does not require disassembly, special tools or test equipment. Zonal inspections are performed in conjunction with other scheduled maintenance tasks by the rating assigned. For example, an AQ assigned to perform an inspection on a radar antenna might also be assigned a zonal inspection of the entire ompartment for obvious defects

ZONAL INSPECTION CRITERIA

STRUCTURAL : FASTENERS - loose or missing

SEAL/SEALANT - deterioration/softspots

FIBERGLASS - delamination

CONTROL CABLES - Shafts, Pressure Seals, Fairleads, Rub Strips, Pulley Fittings

CONDUITS - worn/frayed/misalignment.

MECHANICAL LINKAGES AND ACTUATING MECHANISMS - excessive wear, incorrect adjustment.

FASTENERS - loose, missing

CLAMPS - security, missing rubber inserts.

VIBRATION DAMPERS - Binding, loose attachment, deterioration.Binding, loose attachment, deterioration.

End of Card

FIGURE 23. Example of a zonal inspection criteria card.

CARD xiv	AG–500QA-MRC-000 DATE 1 OCTOBER 2002	CHANGE NO.	ACCESS DOORS AND PANELS

LH VIEW

3	Electronic Equipment, LH
4	APX 64 Coder
6L	Canopy Hinge, LH
8L	Upper Engine Accessory Compartment, LH
9	Brake Reservoir
12L	Engine Access, LH
16	Refrigeration Ducting
18	Canopy External Control

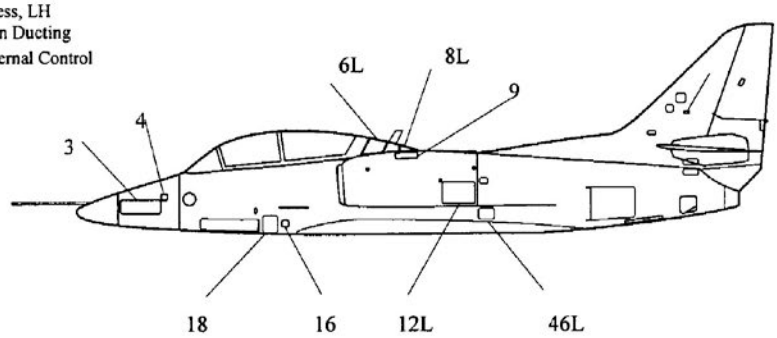

End of Card

FIGURE 24. Example of an access panel illustration card.

Downloaded from http://www.everyspec.com

CARD xii	NAVAIR 01-F14AAD-6-4 DATE: 31 October 1993	CHANGE NO.	ACCESS PANELS AND DOORS

ACCESS PANELS AND DOORS PHASE SCHEDULE

The following access panels and doors must be opened in order to accomplish the requirements contained in the phase cycles as listed (all access panels and doors are listed numerically):

Access Number	A	B	C	D	E	F	Access Number	A	B	C	D	E	F	Access Number	A	B	C	D	E	F
1122-2	X	-	X	-	X	-	2122-1	X	-	-	X	-	-	2222-3	X	X	-	X	X	-
1122-3	X	X	X	X	X	X	2122-3	X	-	-	-	-	-	3022-5	-	X	-	X	-	X
1122-4	-	X	-	X	-	X	2122-4	X	-	X	-	X	-	3023-4	X	-	-	X	-	-
1132-1	X	X	-	-	X	X	2132-1	X	-	X	-	X	-	3123-1	X	-	-	-	-	-
1132-1-1	X	X	X	-	X	X	2132-1-1	X	X	X	X	X	X	3213-3	X	-	-	X	-	-
1132-2	X	-	X	-	X	-	2132-2	-	-	-	X	-	-	4123-1	-	-	X	-	-	X
1132-3	-	X	-	X	-	X	2132-3	-	X	-	X	-	X	4213-3	X	X	X	X	X	X
1132-4	X	X	X	X	X	X	2132-4	X	-	-	X	-	-	5112-12	X	X	X	X	X	X
1132-5	-	-	-	-	X	-	2132-5	-	X	-	-	X	-	5113-2	X	X	-	X	X	-
1132-7	X	X	X	X	X	X	2132-7	X	X	X	X	X	X	5121-1	X	X	X	X	X	X
1132-8	-	-	X	-	-	X	2132-8	-	X	-	X	-	X	5121-2	-	-	X	-	-	X
1132-9	-	-	-	X	-	-	2132-10	X	-	X	-	X	-	5121-4	X	X	X	X	X	X
1133-2	X	X	X	X	X	X	2133-8	-	-	X	-	-	X	5122-1	X	-	X	-	X	-
1133-41	-	-	-	-	-	X	2133-41	X	X	-	-	X	X	5123-1	-	-	X	-	X	-
1232-31	X	-	-	X	-	-	2222-1	X	X	X	X	X	X	5133-1	X	-	X	-	X	-
1232-61	-	-	-	-	-	X	2222-2	-	X	-	X	-	X	5133-2	X	X	X	X	X	X

Continued

FIGURE 25. Example of an access panel matrix card.

CARD xv	AG–500QA-MRC-000 DATE 1 OCTOBER 2002	CHANGE NO.	ANTENNA LOCATIONS

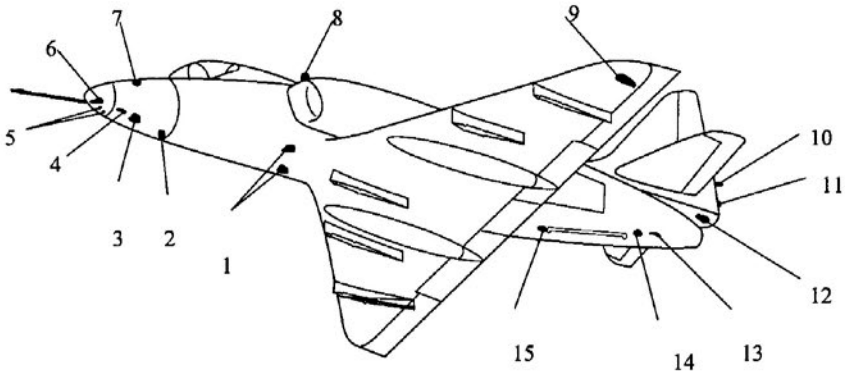

Continued

FIGURE 26. Example of an antenna location illustration card.

Downloaded from http://www.everyspec.com

CARD xii	NAVAIR 01-XXX-6-X DATE: 15 June 1975	CHANGE NO.	ANTENNA LOCATIONS

ANTENNA LOCATIONS

1. AN/ALQ-51/-100 (Fwd DECM)
2. AN/ARN-52 (Fwd Tacan)
3. AN/ARN-48 (UHF/ADF)
4. AN/APN-153 (Doppler)
5. AN/APR-25 (Fwd ECM)
6. AN/ALQ-51 (Fwd DECM)
7. AN/APX-64 (Fwd IFF)
8. AN/ARC-51A (UHF Comm)
9. AN/APN-141A (Radar Altimeter Fairing)
10. AN/ALQ-51/-100 (Aft DECM)
11. AN/ARN-52 (Aft Tacan)
12. AN/APR-25 (Aft ECM - 2 ea.)
13. AN/ALQ-51/-100 (Aft DECM)
14. AN/APX-64 (Aft IFF)
15. AN/ALQ-51/-100 (Aft DECM)

End of Card

FIGURE 26. Example of an antenna location illustration card - Continued.

Downloaded from http://www.everyspec.com

AG-F404A-POM-000

STATIC INSPECTION

1. Programming Harness Box:.....	
a. Exterior Surface.....	Damage/Integrity.
b. Connectors.....	Caps/Security /Straight Pins/ Damaged threads.
2. Vibration Amplifier Box:.....	
a. Exterior Surface.....	Damage/Integrity.
b. Connectors.....	Caps/Security /Straight Pins/ Damaged threads.
3. Cable Assemblies:.....	
a. Inspect for.....	Security.
b. Connectors.....	Damaged threads/Straight pins.
4. Hose assemblies:.....	
a. Inspect for.....	Damage/Cracks /Leakage.
5. Restraint Rod:.....	
a. Inspect for.....	Damaged threads/Cracks/ Proper thread engagement.

1

FIGURE 27. Example of a checklist task page.

Downloaded from http://www.everyspec.com

CARD B-xix	A1-AV8BB-MRC-300 DATE 15 September 2001	CHANGE NO.	PHASE SEQUENCE CONTROL CARD

RATE	NO	PREPHASE	HOURS 1	2	3	4
AMS	1	ACCOMPLISH PREPHASE CARDS 1 AND 2	3	5	7 8	12
AMS	2		3 5		7 9	10
AMH	1		5			
AMH	2					
AMH	3					
AMH	4					
AM	1		22		24	
AME	1		20 19			
AME	2		20			
AD	1		22	23	24	25 26 27
AD	2		22		24	
AC	1		3			
AE	1					
AE	2					
QA	1			31		32
COND	AIR		OFF			
ELECT	PWR		OFF			
HYD	PWR		OFF			

AHR712-18-1-058

End of Card

FIGURE 28. Example of a phase sequence control card.

CARD ii	A1-F402B-MRC-200 Date 1 October 2004	CHANGE NO. 1	SEQUENCE/AREA ZONE SEQUENCE CONTROL CARD

1 COMPRESSOR SECTION
2 COMBUSTION/TURBINE SECTION
3 EXHAUST SECTION

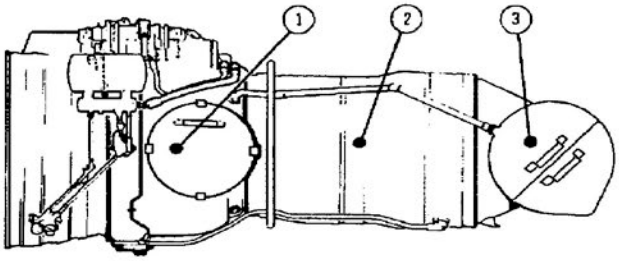

	HOURS 1	2	3	4
6222 1	1	2	3	4
6222 2	1 34		4	4
6222 3	1 34			
6023 1				
6023 2				
6033 1			35	
6432 1				
QA 1		3	4	

Continued

FIGURE 29. Example of a quick engine change assembly (QECA) sequence control card.

Downloaded from http://www.everyspec.com

CARD B-4.0		A1-AV8BB-MRC-300 DATE 15 September 2001		CHANGE NO.	PHASE A	
WORK AREA/ ZONE	CRSN	TIME 0.7	RTG. NO.	MOS. NO.	FLAP/AUXILIARY FLAP/AILERON LUBRICATION	ELEC PWR ON HYD PWR ON COND AIR NA
10		1. Connect electric power source. (Refer to A1-AV8BB-GAI-100.)				
6		2. Connect hydraulic power source. (Refer to A1-AV8BB-GAI-100.)				
		NOTE: All lubrication points and surfaces must be cleaned before application of lubricant, and wiped clean of excess lubricant upon completion.				
6,8		3. Lubricate flap and aileron items 1, 2, 3, 8, 9, and 10.				
		4. Rotate nozzles to down position.				
		5. Position flaps and ailerons down.				
		a. Apply electric power. (Refer to A1-AV8BB-GAI-100.)				
		b. Apply hydraulic power. (Refer to A1-AV8BB-GAI-100.)				
		c. On ground power panel assembly, set FWD EQP and COCKPIT switches to ON. Set AFT EQP switch to ALL.				
		d. On LDG GEAR/FLAPS panel assembly, set FLAPS-RESET/ON/OFF switch momentarily to RESET, then to ON				

Continued

FIGURE 30. Example of a task card.

CARD B-2.0		A1-AV8BB-MRC-300 DATE 15 September 2001		CHANGE NO.	PREPHASE A	
WORK AREA/ ZONE	CRSN	TIME 0.3	RTG. NO. AMS 1	MOS. NO. 6053 1	ORDNANCE SAFETY	ELEC PWR ON HYD PWR ON COND AIR NA
					Assisted by: AO #2 (0.3 Hr)	
		WARNING: Failure to remove cartridges or ammunition from bomb racks, dispenser, and gun can result in possible injury or death.				
		1. Remove cartridges and ammunition from the following. (Refer to A1-AV8BB-LWS-000.)				
		a. BRU-36/A				
		b. GAU-12/U gun				
					End of Card	

(Card B-2.1 Blank)

FIGURE 31. Example of an assist card.

Downloaded from http://www.everyspec.com

CARD A-3.0		A1-AV8BB-MRC-300 DATE 15 September 2001		CHANGE NO.	PHASE A	
WORK AREA/ ZONE	C R S N	TIME 0.7	RTG. NO.	MOS. NO.	FLAP/AUXILIARY FLAP/AILERON LUBRICATION	ELEC PWR ON HYD PWR ON COND AIR NA
10		1. Connect electric power source. (Refer to A1-AV8BB-GAI-100.)				
6		2. Connect hydraulic power source. (Refer to A1-AV8BB-GAI-100.)				
		NOTE: All lubrication points and surfaces must be cleaned before application of lubricant, and wiped clean of excess lubricant upon completion.				
6,8		3. Lubricate flap and aileron items 1, 2, 3, 8, 9, and 10.				
		4. Rotate nozzles to down position.				
		5. Position flaps and ailerons down.				
		a. Apply electric power. (Refer to A1-AV8BB-GAI-100.)				
		b. Apply hydraulic power. (Refer to A1-AV8BB-GAI-100.)				
		c. On ground power panel assembly, set FWD EQP and COCKPIT switches to ON. Set AFT EQP switch to ALL.				
		d. On LDG GEAR/FLAPS panel assembly, set FLAPS-RESET/ON/OFF switch momentarily to RESET, then to ON				

Continued

FIGURE 32. Example of a lubrication task card.

CARD 2.4	NAVAIR 17–600–117–6–2 DATE 1 OCTOBER 2002	CHANGE NO. 1	MAIN FUEL STRAINER

1. Screen Assembly
2. Cover Assembly
3. Retaining Ring
4. Wing Nut Assembly
5. Cover Assembly Lock
6. "O" Ring

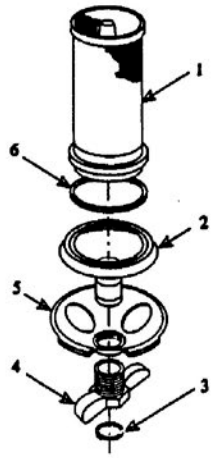

End of Card

FIGURE 33. Example of a task card illustration.

Downloaded from http://www.everyspec.com

CARD 2.4	NAVAIR 17–600–117–6–2 DATE 1 OCTOBER 2002	CHANGE NO. 1	MAIN LANDING GEAR LUBRICATION

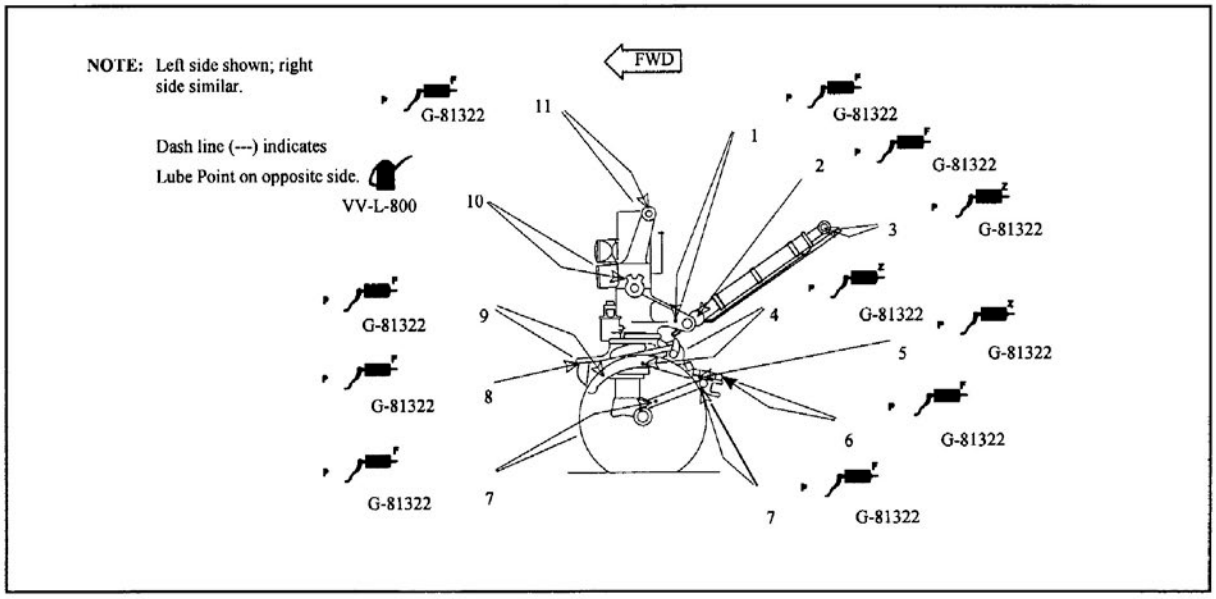

End of Card

FIGURE 34. Example of a lubrication illustration card.

CARD 2.4	NAVAIR 17–600–117–6–2 DATE 1 OCTOBER 2002	CHANGE NO. 1	LUBRICATION SYMBOLS

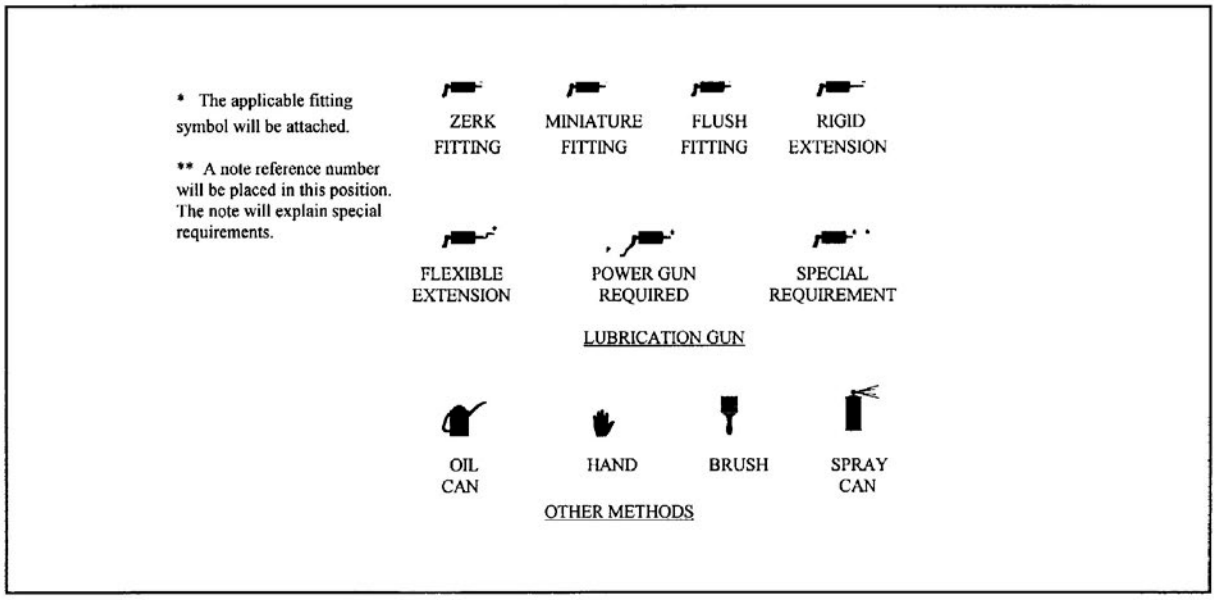

End of Card

FIGURE 35. Example of a lubrication symbols card.

Downloaded from http://www.everyspec.com

CARD B-60		A1-C3AAA-MRC-400 DATE 1 OCTOBER 2002		CHANGE NO.	PHASE B	
WORK AREA/ ZONE	CRSN	TIME 0.1	RTG. NO. QA 1	MOS. NO.	RUDDER TRIMMER LUBRICATION	ELEC PWR N/A HYD PWR N/A COND AIR NA
10.3		NOTE: Refer to Task Card B-33.1, Step No. 3. 1. Rudder trimmer mechanism for lubrication, hydraulic leaks and component installation.				

Final QA Inspection Card

CARD 31		NAVAIR 01-XXX-6-3 DATE 1 OCTOBER 2002		CHANGE NO.	ASPA	
WORK AREA/ ZONE	CRSN	TIME 0.1	RTG. NO. QA 1	MOS. NO.	FIRE EXTINGUISHERS	ELEC PWR OFF HYD PWR N/A COND AIR NA
12.4, 15.4		NOTE: Refer to Task Card 30.1 1. LH/RH fire extinguisher containers in main landing gear well: a. Witness torque (500-700 in lbs) of line assembly elbow nut to reducer fitting. b. Installation of flexible lines.				

In-process QA Inspection Card

Continued

FIGURE 36. Example of final and in-process quality assurance cards.

Downloaded from http://www.everyspec.com

CONCLUDING MATERIAL

Custodian:
Navy - AS

Preparing activity:
Navy - AS
(Project TMSS-2014-020)

NOTE: The activity listed above was interested in this document as of the date of this document. Since organizations and responsibilities can change, you should verify the currency of the information above using the ASSIST Online database at https://assist.dla.mil.