Downloaded from http://www.everyspec.com

NOT MEASUREMENT SENSITIVE

MIL-STD-3001-6A(AS)
10 October 2014
SUPERSEDING
MIL-STD-3001-6(AS)
15 May 2001

DEPARTMENT OF DEFENSE STANDARD PRACTICE

DIGITAL TECHNICAL INFORMATION FOR MULTI-OUTPUT PRESENTATION OF TECHNICAL MANUALS

STRUCTURAL REPAIR INFORMATION
(PART 6 OF 8 PARTS)

AMSC AREA TMSS

DISTRIBUTION STATEMENT A. Approved for public release; distribution is unlimited.

Downloaded from http://www.everyspec.com

FOREWORD

1. This standard is approved for use by the Department of the Navy and is available for use by all Departments and Agencies of the Department of Defense.

2. This eight-part standard establishes the requirements needed to prepare digital technical information for multi-output presentation of NAVAIR work package (WP) Technical Manuals (TMs). The technical content and mandatory style and format requirements contained in this eight-part standard can be used to develop and assemble complete TMs for aircraft weapon systems, aeronautical equipment, airborne weapons/equipment, and support equipment WP TMs. The requirements are applicable for the output of printed paper and PDF screen displayed TMs. The requirements are also applicable for the display of Interactive Electronic Technical Manuals (IETMs) on any viewer that supports MIL-STD-3001-1.

3. MIL-STD-3001-6 is Part 6 of 8 parts and is incomplete without Parts 1 through 5 and Parts 7 and 8. Part 6 establishes the technical content requirements for the preparation of information for the repair, corrosion control, and nondestructive inspection of aircraft structure and structural components at all levels of maintenance. This data can be used to develop TMs in a variety of output forms, including interactive screen presentations and page-based printed and PDF screen displayed TMs.

4. MIL-STD-3001-1 contains general preparation requirements for the multi-output presentation of NAVAIR WP TMs. MIL-STD-3001-2 through MIL-STD-3001-8 contain specific functional technical content requirements for the preparation of all NAVAIR WP TMs and revisions. Parts 1 through 8 are identified below:

MIL-STD-3001-1	Preparation of Digital Technical Information for Multi-output Presentation of Technical Manuals.
MIL-STD-3001-2	Description, Principles of Operation, and Operation Data.
MIL-STD-3001-3	Testing and Troubleshooting Procedures.
MIL-STD-3001-4	Maintenance Information with Illustrated Parts Breakdown (IPB).
MIL-STD-3001-5	Aircraft Wiring Information.
MIL-STD-3001-6	Structural Repair Information.
MIL-STD-3001-7	Periodic Maintenance Requirements.
MIL-STD-3001-8	Separate Illustrated Parts Breakdown (IPB).

5. Comments, suggestions, or questions on this document should be addressed to the Naval Air Systems Command (Commander, Naval Air Warfare Center Aircraft Division, Code 412000B120-3, Highway 547, Lakehurst, NJ 08733-5100) or emailed to michael.sikora@navy.mil. Since contact information can change, you may want to verify the currency of this address information using the ASSIST online database at https://assist.dla.mil.

Downloaded from http://www.everyspec.com

CONTENTS

PARAGRAPH PAGE

FOREWORD ii

1. **SCOPE** 1
   1.1 Scope 1
2. **APPLICABLE DOCUMENTS** 1
3. **DEFINITIONS** 1
4. **GENERAL REQUIREMENTS** 1
   4.1 General 1
   4.2 Maintenance level applicability 1
   4.3 Selective application and tailoring 1
   4.4 Preparation of digital data for electronic delivery 2
   4.4.1 Use of the DTDs 2
   4.5 Technical content 2
   4.5.1 Types of work packages 2
   4.5.2 Style and format requirements 2
   4.6 Standard tables and lists 2
   4.7 Damage classification 2
   4.8 Damage evaluation 3
   4.9 Structure repair classification and definition 4
   4.9.1 Typical repair 4
   4.9.2 Specific repair 4
   4.9.3 Temporary repair 4
   4.9.3.1 One-time-flight repair 4
   4.9.4 Permanent repair 4
   4.9.5 Critical and noncritical area repair 5
   4.9.6 Alternate repair 5
5. **DETAILED REQUIREMENTS** 5
   5.1 Preparation of structural repair information 5
   5.2 Work package content 5
   5.2.1 Title block **<titleblk>** 5
   5.2.2 Work package information **<wpinfo>** 5
   5.2.2.1 Reference material list **<reflist>** 6
   5.2.2.2 Record of Applicable Technical Directives **<ratd>** 6
   5.2.2.3 Support equipment required list **<selist>** 7
   5.2.2.4 Facilities required list <**faclist**> 8
   5.2.2.5 Materials required list **<matlist>** 8
   5.2.3 Required aircraft structural repair information 9
   5.2.3.1 Aircraft structure visual index work package <**repindxwp**> 9
   5.2.3.2 General aircraft structural information work package <**genstructwp**> 10
   5.2.3.2.1 Aircraft structural description <**structrepair**> 10
   5.2.3.2.1.1 Types of construction 10
   5.2.3.2.1.2 Principle dimensions 10
   5.2.3.2.1.3 Station location diagram 11
   5.2.3.2.1.4 New types of materials 11

Downloaded from http://www.everyspec.com

CONTENTS

PARAGRAPH PAGE

5.2.3.2.2 Aircraft leveling and aligning <**structrepair**> 11
5.2.3.2.3 Contour data <**structrepair**> 11
5.2.3.2.4 In-service tolerance <**structrepair**> 11
5.2.3.2.5 Common shop practices <**structrepair**> 11
5.2.3.2.6 Repair materials <**structrepair**> 12
5.2.3.2.7 Support of structure <**structrepair**> 12
5.2.3.2.8 Crash handling and shipping <**structrepair**> 12
5.2.3.3 Typical (common) repair data work package 13
5.2.3.3.1 Repair of new/peculiar structure 14
5.2.3.4 Specific repair data 14
5.2.3.4.1 Damage identification and evaluation data <**damage**> 15
5.2.3.4.2 Typical repair procedures <**typrepproc**> 15
5.2.3.4.3 Aircraft specific repair procedures <**specrepproc**> 15
5.2.3.4.3.1 Airframe sealing 15
5.2.3.4.3.2 Fuel tank sealing 16
5.2.3.4.3.3 Pressure testing 16
5.2.3.4.3.4 Control surface balancing 16
5.2.3.4.3.5 Removal and installation instructions 16
5.2.3.4.3.6 Local manufacturing or assembling 16
5.2.3.4.3.7 Repair procedure details 16
5.2.3.4.3.8 Illustrated parts breakdown data <**ipb-structdata**> 17
5.2.4 Required corrosion control repair information 17
5.2.4.1 Corrosion control materials requirements work package <**cormatwp**> 17
5.2.4.2 General information work package <**geninfowp**> 18
5.2.4.2.1 Protective covers 18
5.2.4.2.2 Corrosion prone areas 18
5.2.4.3 Corrosion control practices work packages 18
5.2.4.3.1 Typical corrosion control data work packages <**typcorwp**> 18
5.2.4.3.2 Inspection for corrosion work package <**corinspwp**> 18
5.2.4.3.3 Cleaning work packages <**corclnwp**> 19
5.2.4.3.4 Stripping work packages <**stripwp**> 19
5.2.4.3.5 Corrosion removal work packages <**corremwp**> 19
5.2.4.3.6 Chemical treatment of metal surfaces work packages <**chemtrtwp**> 19
5.2.4.3.7 Corrosion control seals and sealants work packages <**corsealwp**> 19
5.2.4.3.8 Paint systems work packages <**paintsyswp**> 19
5.2.4.3.8.1 Exterior marking 20
5.2.4.3.8.2 Interior markings 20
5.2.5 Required nondestructive inspection data requirements 20
5.2.5.1 Nondestructive inspection general information work package <**ndigeninfowp**> 20
5.2.5.2 Nondestructive inspection typical procedures work packages <**nditypwp**> 20
5.2.5.3 Nondestructive inspection index work package <**ndindxwp**> 20
5.2.5.4 Nondestructive inspection specific procedures work packages <**ndispecwp**> 21
5.2.5.4.1 Item nomenclature <**itemnom**> 22
5.2.5.4.2 Item description <**itemdesc**> 22
5.2.5.4.3 Defect description <**defdesc**> 22

Downloaded from http://www.everyspec.com

CONTENTS

PARAGRAPH PAGE

5.2.5.4.4 Primary NDI procedure <**priproc**>.....22
5.2.5.4.5 Backup NDI procedure <**bkupproc**> 22
5.2.5.5 Content of NDI procedures 23
5.2.5.5.1 Illustrations for NDI procedures 23
5.2.5.5.2 Local manufacturing of NDI support equipment 23
5.2.5.5.3 Frequency of NDI.....23
5.2.5.5.4 Preparation for NDI testing.....23
5.2.5.5.5 Acceptance/Rejection criteria 24
5.2.5.5.6 Post inspection cleaning and corrosion control 24
5.2.5.5.7 Specific NDI testing method minimum requirements.....24
5.2.5.5.7.1 Liquid penetrant method 24
5.2.5.5.7.2 Magnetic particle method.....24
5.2.5.5.7.3 Eddy current (electromagnetic) method.....25
5.2.5.5.7.4 Ultrasonic method 25
5.2.5.5.7.5 Radiographic method 26
5.2.6 Illustrated parts breakdown <**ipb-structdata**> 26
5.2.6.1 Technical content 27
6. **NOTES**.....27

FIGURE PAGE

FIGURE 1. Example of an aircraft structure index. 28
FIGURE 2. Example of a general aircraft structural information work package. 29
FIGURE 3. Example of a specific repair data work package. 31
FIGURE 4. Example of a structural group repair index. 35
FIGURE 5. Example of a typical corrosion control repair work package. 36
FIGURE 6. Example of a nondestructive inspection typical procedures work package. 39
FIGURE 7. Example of an NDI inspection index. 42
FIGURE 8. Example of a structural repair GAPL. 43

Downloaded from http://www.everyspec.com

1. SCOPE

1.1 Scope. This part of the standard establishes the technical content requirements for the preparation of information for the repair, corrosion control, and nondestructive inspection of aircraft structure and structural components at all levels of maintenance. This data can be used to develop TMs in a variety of output forms, including interactive screen presentations and page-based printed and screen displayed PDF TMs.

2. APPLICABLE DOCUMENTS

2.1 The applicable documents in Section 2 of MIL-STD-3001-1 apply to this Part.

3. DEFINITIONS

3.1 The definitions in Section 3 of MIL-STD-3001-1 apply to this Part.

4. GENERAL REQUIREMENTS

4.1 General. Aircraft structure repair coverage shall contain information and instructions required to determine the extent of damage to airframe structure and structural components and to repair the damage. The information and instructions shall cover repair of all repairable damage in any location. Repairs shall comply with all relevant design requirements. Wherever practical, only hand tools shall be used; however, use of jigs and power tools shall be specified when necessary. When applicable, instructions for one-time (ferry) flight repairs, temporary repairs, and critical area repairs shall include information on flight restrictions to be imposed until permanent repairs are completed.

4.2 Maintenance level applicability. Requirements contained in this Part are applicable to all types of maintenance levels of TMs unless specifically noted in bold and in parentheses (e.g., **Support Equipment Manuals only**, **Depot Level only**, etc.).

4.3 Selective application and tailoring. This Part contains some requirements that may not be applicable to the preparation of all TMs. Selective application and tailoring of requirements contained in this Part shall be accomplished through the use of the Technical Manual Content Selection Matrixes contained in MIL-STD-3001-1, Appendix A. The applicability of some requirements is also designated by one of the following statements: unless specified otherwise by the requiring activity or as/when specified by the requiring activity.

Downloaded from http://www.everyspec.com

4.4 Preparation of digital data for electronic delivery. TM data prepared and delivered digitally in accordance with this Part of the standard shall be XML-tagged and assembled using the modular Document Type Definition (DTD). Refer to MIL-STD-3001-1 for information on obtaining or accessing this modular DTD. XML tags used in the modular DTD are noted throughout the text of this Part in bracketed, bold characters (i.e., **<structim>**) as a convenience for the TM author and to denote the appropriate tag to be used for the specific information when developing a document instance.

4.4.1 Use of the DTDs. The modular DTDs referenced in this Part interpret the technical content and structure for the functional requirements contained in this Part and are mandatory for use.

4.5 Technical content. Technical content requirements contained in this Part are considered mandatory and are intended for compliance. The content structure for the technical data being developed shall conform to the associated modular Document Type Definition (DTD) for Structural Repair information.

4.5.1 Types of work packages. There are basically two types of WPs. The first type is an information-oriented WP. It provides information such as general information about the printed TM or the IETM and specific information about the weapon system/equipment, such as principles of operation and operating instructions. The second type of WP is task-oriented. Task-oriented WPs reflect all required maintenance tasks, including testing and troubleshooting, at the assigned level of maintenance. Task-oriented WPs also contain supporting information such as required materials and support equipment required for each defined task. WPs are written to reflect the engineering design, Logistics Support Analysis (LSA) or Logistics Management Information (LMI), Level of Repair Analysis (LORA), approved maintenance plan, and the established repair concept (SM&R Codes).

4.5.2 Style and format requirements. For mandatory style and format requirements for WP TMs intended for a printed, page-oriented presentation, refer to MIL-STD-3001-1, Appendix B. For mandatory style and format requirements for the on-screen display of an IETM, refer to NAVAIRINST 4120.11, Policy for Preparation and Standardization of the Naval Air Systems Command Interactive Electronic Technical Manuals (IETMs).

4.6 Standard tables and lists. Standard tables and lists are noted throughout the text of this standard in bold and in parentheses (i.e., **(standard table)**, **(standard list)**). The structure and titles of the column headings for these standard tables and lists shall have no deviations.

4.7 Damage classification. Damage to aircraft structure and to structural components shall be classified in one of the following categories.

a. Negligible damage. Damage or distortion which can be permitted to exist as is.

b. Repairable damage. Damage which can be permanently corrected by reworking the damaged structure or components with no adverse effects upon structural integrity, flight

Downloaded from http://www.everyspec.com

characteristics, or safety of the aircraft. This includes minor replacement of parts and correction by a simple procedure such as removing dents, stop-drilling cracks, or temporary patching without placing restrictions on flight.

c. Major damage. Damage which requires replacement of structural components and major assemblies or engineering evaluation to determine the feasibility of repair.

4.8 Damage evaluation. Criteria (acceptance/rejection) for evaluating corrosion and structural damage shall be defined. Damage evaluation data peculiar to vertical take off and landing (VTOL) aircraft and short take off and landing (STOL) aircraft shall be included when applicable. Limits shall be established and stated for assigning the appropriate damage classification defined in 4.7. Data shall be prepared, but not limited to, the following as required:

a. External inspection for skin deformation.

b. Detailed visual inspection for damage areas.

c. Inspection for fire damage by use of portable testers or as evidenced by discoloration.

d. Inspection for corrosion from residues of aircraft fire fighting chemical materials.

e. Alignment checks.

f. Hard landing and over-G inspections.

g. Pressure tests for leaks and for strength.

h. Inspection for damage from severe engine stalls.

i. Inspection for damage from landing gear failure.

j. Inspection for damage from abnormal drag chute deployment.

k. Inspection for damage from tire blowout.

1. Inspection for damage to composite structure.

m. Inspection for wear in excess of wear tolerance limits.

n. Detailed nondestructive inspection procedures for structurally significant items.

o. Inspection for damage from rotor blade or prop-rotor contacts.

p. Inspection for damage from drive train interferences or sudden stoppages.

Downloaded from http://www.everyspec.com

q. Inspection for damage from rotor system stresses.

4.9 Structure repair classification and definition. For various applications, repairs may be defined using the following terminology:

a. Typical repair.

b. Specific repair.

c. Temporary repair.

d. One-time-flight repair.

e. Permanent repair.

f. Critical and noncritical area repair.

g. Alternate repair.

4.9.1 Typical repair. A typical repair is a repair which is applicable to more than one structural group or component covered in the manual (normal means of permanent correction).

4.9.2 Specific repair. A specific repair is a repair which covers types of damage or types of structure which cannot be adequately repaired using typical or common repairs.

4.9.3 Temporary repair. A temporary repair is one which may be made to permit the aircraft to be flown until such time as a permanent repair can be made. A temporary repair normally restores full load carrying capabilities to the required member but may be deficient from the standpoint of interchangeability of parts, aerodynamically, or with respect to fatigue life. Normally, a temporary repair will be removed and a permanent repair installed at the earliest convenient time. Instructions for temporary repairs shall include any necessary information on flight restrictions which must be observed until permanent repairs have been completed. Temporary repairs shall be as simple and practical as possible. Procedures shall require use of the most basic tools practicable. Use of materials requiring unsophisticated fabrication techniques shall be stressed.

4.9.3.1 One-time-flight repair. A one-time-flight repair which is made to restore limited load-carrying requirements to allow an aircraft to be flown to a repair station for application of permanent repairs. Instructions for one-time-flight repair shall include all necessary information on flight restrictions which must be observed during the ferry flight.

4.9.4 Permanent repair. A permanent repair is one which may be expected to equal or exceed the original design life of the repaired structure or component with no adverse effects upon the structural integrity, fatigue life, safety, or flying characteristics of the aircraft.

Downloaded from http://www.everyspec.com

4.9.5 Critical and noncritical area repair. Critical area repairs are specific permanent repairs in areas which are highly stressed, fatigue critical, or corrosion prone in normal usage. Damage in these areas would affect safety of the aircraft. Information and instructions for critical area repairs shall include necessary flight restrictions required. For corrosion control purposes, structure and components of the aircraft shall be classified as critical or noncritical. An item shall be classified as critical when a single failure of the item during any operating condition could result in one of the following:

a. Significant injury to occupants of the aircraft.

b. Loss of aircraft or one of its major components.

c. Loss of control.

d. Unintentional release of or inability to release any armament store.

4.9.6 Alternate repair. Alternate repairs shall be included when practical. When a repair involves use of an extrusion, an alternate, using sheet, bar, or tubing, shall be presented. When new types of material are required, an alternate repair using more common, generally available material shall be included.

5. DETAILED REQUIREMENTS

5.1 Preparation of structural repair information. Aircraft structural repair information shall be developed and contained in Aircraft Structural Repair Information Modules **<structim>**. These information modules shall be logically subdivided into information- or task-oriented WPs.

5.2 Work package content. Each WP developed for aircraft structural repair information shall consist of the following:

a. Title block**.**

b. WP information.

c. Required aircraft structural repair information.

d. Required corrosion control repair information.

e. Required nondestructive inspection information.

5.2.1 Title block **<titleblk>**. For page-based TMs, refer to MIL-STD-3001-1, Appendix B for WP title block content requirements. For **IETMs**, refer to MIL-STD-3001-1, Appendix C.

5.2.2 Work package information **<wpinfo>**. Each WP developed for aircraft structural repair information shall begin with a reference material list, a record of applicable technical directives,

Downloaded from http://www.everyspec.com

a support equipment required list, a facilities required list and a materials required list, if applicable.

5.2.2.1 Reference material list **<reflist>**. Reference material required to complete a task or discussion within a WP shall be contained in a reference material list (**standard list**). If no reference material applies, the heading "Reference Material" shall be omitted from the WP. Guidelines for developing the reference material list are provided below:

a. Only those publications required for performance of the task covered by the WP shall be included in the reference material list.

b. Publications such as guides or standards which are not directly needed to accomplish the task (backup informational material or bibliography) shall not be listed in the reference material list even if cited in the WP text.

c. Each entry in the list shall consist of:

(1) A title. Reference publications within the WP by title. If the reference is to a specific WP, the WP title shall be listed below the related publication title.

(2) A number. The appropriate publication or WP number.

d. The maintenance level of publications listed is not required.

e. Referenced publications shall be presented by title in alphabetical order. The publication title, WP title and WP number shall also be identified. When two or more WPs are referenced in the same manual, they shall be listed in numerical sequence; repetition of the manual title and publication number is not required.

f. Additional WPs within the same manual that are required to complete the task or discussion shall be presented first in numerical sequence. The WP title and WP number shall also be identified. The publication number is not required.

g. Referenced publications not prepared in WP format shall be presented in numerical sequence. The title and publication number shall also be included.

5.2.2.2 Record of Applicable Technical Directives **<ratd>**. Technical directives applicable to a specific WP shall be listed in a record of applicable technical directives list (**standard list**). If no technical directives apply, the heading "Record of Applicable Technical Directives" shall be omitted from the WP. The record of technical directives shall be prepared in accordance with the following guidelines:

a. All issued technical directives having any impact on the WP shall be listed upon incorporation into the WP.

Downloaded from http://www.everyspec.com

b. Approved engineering change proposals (ECPs) that have no effect on retrofit of the end item shall not be listed in the record of applicable technical directives (e.g., "no technical directive will be issued").

c. All technical directives and related ECPs or rapid action minor engineering changes (RAMECs) shall be listed upon incorporation into the WP.

(1) "TD Type/No." - Enter the type and number of the technical directive, e.g., "F/A-18 AFC126" or "AVC 102." Note: The "TD Type/No." is identified on the Change Control Board (CCB) formal letter of ECP or RAMEC approval. Refer to NAVAIR 00-25-300, Naval Air Systems Command Technical Directives System.

(2) "TD Date" - Enter the date of issue of the technical directive. If the number of the technical directive has been assigned but the directive has not been issued, a dash (-) shall be entered.

(3) "Title and ECP/RAMEC No." - The title of the technical directive and the ECP number or RAMEC number, if applicable, shall be listed. If a technical directive listed is the direct result of an approved ECP or RAMEC, the acronym ECP or RAMEC and number shall be shown in parentheses following the technical directive title.

(4) "Date Inc." - The date the information affected by the technical directive or the ECP was incorporated into the WP.

(a) If the technical directive number has been assigned and the directive has not yet been issued (retrofit program), but the ECP that incorporates the change in the production program has been approved, the production ECP coverage shall be included, and the notation "Production coverage only" shall be entered under "Remarks."

(b) When the retrofit TD is approved and incorporated in a change or revision following the incorporation of the production ECP coverage, the TD date of issue shall be entered under "TD Date," the notation "Production coverage only" shall be removed from under "Remarks," and the date of retrofit coverage incorporation shall be listed under "Date Inc." (in lieu of the production ECP coverage incorporation date).

(5) "Remarks" - Enter any applicable remarks.

5.2.2.3 Support equipment required list **<selist>**. All support equipment (SE), including special tools required to perform operational type procedures, shall be listed (**standard list**) immediately following the record of applicable technical directive data. If no support equipment is required, the heading "Support Equipment Required" shall be omitted from the WP. Only those special tools (including torque wrenches) and equipment authorized for use at the level of maintenance covered shall be listed. Items shall be listed in alphabetical sequence by noun nomenclature. Standard hand tools shall not be listed. Illustrations shall not be prepared in support of such lists. When the manual is used by other services or commands that require usage restrictions, the item

Downloaded from http://www.everyspec.com

shall be identified by a symbol following the part number in parentheses. The usage of the symbol shall be explained in a notation (e.g., "(AF)=USAF only," "(NS)=NAVSEA only," "(MC)=MARINE CORPS only").

5.2.2.3.1 Each support equipment entry in the list shall be identified by "Nomenclature," "Part Number," and "CAGE Code." When more than one of the same item is required, the quantity shall follow the nomenclature in parentheses. If a “CAGE Code” is not available a dash shall be substituted for the “CAGE Code”.

5.2.2.3.2 If the WP contains multilevel maintenance procedures and any of the SE items are authorized for use at only certain level(s), the restrictive use shall be indicated by the use of an O, I, and/or D in parentheses following the item nomenclature.

5.2.2.4 Facilities required list <**faclist**>. All facilities needed to accomplish the maintenance procedures shall be listed (**standard list**) immediately following the support equipment required list. If no facilities are required, the heading "Facilities Required" shall be omitted from the WP. Each facilities entry in the list shall be identified by "Nomenclature," "Part Number," and "CAGE Code."

5.2.2.5 Materials required list **<matlist>**. All materials (consumable materials and/or expendable items) required to perform maintenance type procedures shall be listed (**standard list**). If no materials apply, the heading "Materials Required" shall be omitted from the WP. Items shall be listed in alphabetical sequence by noun nomenclature. The materials required list shall be prepared in accordance with the following guidelines:

a. Each material entry in the list shall be identified by "Nomenclature," "Specification/Part Number," and "HMWS Index Number," as applicable.

(1) Unless alternate identification is approved by the requiring activity, materials shall be listed by Government specification.

(2) If the WP contains multilevel maintenance procedures and any of the materials is authorized for use at only certain level(s), the restriction shall be indicated by the use of an O, I, and/or D in parentheses following the item nomenclature.

(3) When more than one of the same item is required, the quantity shall follow the nomenclature in parentheses.

b. Parts that require mandatory replacement (e.g., preformed packing) in the procedure shall be listed.

c. An appropriate notation shall follow the item to explain each restriction and/or quantity requirement.

Downloaded from http://www.everyspec.com

5.2.3 Required aircraft structural repair information. All aircraft structural repair WPs described in 5.2.3.1 through 5.2.3.4 may have an introduction <**intro**>, and shall be divided into the types of WPs presented below:

a. Aircraft structure visual index WP.

b. General aircraft structural information.

c. Typical (common) repair data.

d. Specific repair data.

(1) Temporary repair data.

(2) Permanent repair data.

5.2.3.1 Aircraft structure visual index work package <**repindxwp**>. The aircraft structure visual index WP shall consist of an illustration which visually identifies each of the aircraft's major structural groups. This index is used with the structural group repair index (refer to 5.2.3.4) to provide a quick reference to the repair data visually. This illustration shall include the following:

a. Views of the aircraft, exploded as necessary, to clearly show location of each major structural group covered by a technical content WP (see figure 1).

b. An index number assigned to each structural group.

c. A table. This table <**repindx**> (**standard table**) shall follow the illustration portion of the index and shall include the following data:

(1) Item Column. This column shall show all assigned index numbers in numerical order.

(2) Nomenclature Column. This column shall show the name by which each item is identified throughout the manual.

(3) WP/Volume Number Column. When repair instructions are in the same volume as the index illustration, this column shall show the number of the WP containing the structural group repair index illustration (refer to 5.2.3.4) for the listed item. When the structural group repair index illustration for the listed item is in a different volume, this column shall show the publication number and WP number containing the index for the item.

Downloaded from http://www.everyspec.com

5.2.3.2 General aircraft structural information work package <**genstructwp**>. General information relative to repair of aircraft structure and structural components shall be prepared and included in WPs (see figure 2). When repairs contained in general series manuals are acceptable for use, those procedures shall be referenced. General information shall include, but not necessarily be limited to, the following:

a. Aircraft structural description.

b. Aircraft leveling and alignment.

c. Contour data.

d. In-service tolerances.

e. Shop practices.

f. Repair materials.

g. Support of structure.

h. Crash handling and shipping.

5.2.3.2.1 Aircraft structural description <**structrepair**>. Descriptive material applicable to structural repair of the aircraft shall be developed. This shall include information of the following types plus any additional descriptive information pertinent to repair of the aircraft:

a. Types of construction used on the aircraft.

b. Principal dimensions.

c. Station location diagrams.

d. New materials used.

5.2.3.2.1.1 Types of construction. Brief descriptions and locations of principle types of construction used in the aircraft, supported by illustrations, as applicable, shall be included. This shall include such types as cantilever construction, stressed skin, tapered skin, plastics, and honeycomb.

5.2.3.2.1.2 Principal dimensions. An illustration showing principle dimensions of the aircraft shall be prepared. All significant dimensions required for structure repair shall be included.

Downloaded from http://www.everyspec.com

5.2.3.2.1.3 Station location diagram. A diagram showing location of significant stations on the aircraft shall be prepared. Reference points shall be identified as established in the engineering drawings for the aircraft.

5.2.3.2.1.4 New types of materials. Brief descriptions of relatively new or unfamiliar materials such as composite materials and high strength steels not covered in general series manuals shall be included.

5.2.3.2.2 Aircraft leveling and aligning <**structrepair**>. Information and procedures shall be included for leveling and aligning the aircraft. An illustration showing and identifying the points used in leveling the aircraft transversely and longitudinally shall be prepared. Leveling and aligning tools shall be identified and, if necessary, illustrated.

5.2.3.2.3 Contour data <**structrepair**>. Contour data and dimensions shall be defined for major structural components such as wings, vertical stabilizer, and horizontal stabilizer. This information may be presented on illustrations. Instructions shall include data necessary for construction of templates, support fixtures, and jigs for use in repairing components. Where applicable, the data shall include a list of contour drawings and master dimension drawings for the aircraft.

5.2.3.2.4 In-service tolerance <**structrepair**>. In-service tolerance information shall include the following:

a. Permissible wear tolerances in excess of manufacturing tolerances.

b. Permissible misalignment in excess of manufacturing tolerances.

c. Permissible step-gap and mismatch tolerances.

d. Aircraft surface critical contour tolerances.

e. Reaming and bushing tolerances.

f. Allowable clearances.

5.2.3.2.5 Common shop practices <**structrepair**>. Common shop practices peculiar to the aircraft shall be included when not covered in general series manuals. The following types of information are included in this category:

a. Sheet metal forming.

b. Working titanium alloys.

c. Substitution, removal, and installation of fasteners equal to or better than original equipment.

Downloaded from http://www.everyspec.com

d. Filling dimpled and countersunk holes.

e. Coin dimpling (including special tools required).

f. Repairing welds.

g. Substituting parts.

h. Local manufacturing of parts.

i. Working high strength steel.

j. Working composite materials.

5.2.3.2.6 Repair materials <**structrepair**>. Lists of all materials required to make repairs detailed in every repair WP shall be prepared. Wherever possible, Government standard parts shall be specified for repair or replacement of damaged structure. Extrusions shall be identified by material and die number or by source of supply. When practical, alternate repairs using sheet, bar, or tubing shall be included for repairs normally requiring extrusions. The following shall be shown for each item listed:

a. Nomenclature.

b. Government or commercial specification number.

c. Part number or procurement source.

d. Application.

5.2.3.2.7 Support of structure <**structrepair**>. Information and procedures for supporting the aircraft structure during each repair shall include the following as required:

a. Identification of all stressed plates or panels which require shoring or supporting of structure prior to removal.

b. Instructions for fabricating supports.

c. Instructions for using supports.

5.2.3.2.8 Crash handling and shipping <**structrepair**>. The following types of data shall be included to cover handling and shipping of crash damaged aircraft:

Downloaded from http://www.everyspec.com

a. Procedures and safety precautions for handling hazardous items such as batteries, fuel, oil, liquid oxygen, and explosive devices. The requirements of CFR 49, Occupational Safety and Health Administration (OSHA) regulations, and general series manuals shall be complied with.

b. Procedures for lifting the aircraft shall include identification of necessary handling equipment.

c. Procedures for moving the damaged aircraft from the crash site shall include identification of necessary handling equipment, securing the aircraft, required clearances after loading, and load weights.

d. References to corrosion control and preservation manuals for applicable corrosion prevention and preservation procedures.

e. Disassembly into structural groups or sections.

f. Weight and center of gravity of each component.

g. When applicable and not included in other available manuals, crating and shipping instructions shall be included. Instructions shall include, as applicable:

(1) Manufacturing of crates.

(2) Manufacturing of cradles.

(3) Installation of equipment in crates.

(4) Support points.

(5) Weight of each component.

(6) Weight and center of gravity of each crated component.

5.2.3.3 Typical (common) repair data work package. Typical repairs are those which are applicable to more than one structural group or component. To avoid unnecessary duplication, typical repairs shall be covered in separate WPs and referenced as needed. Typical repair WPs <**typrepwp**> shall include, but shall not be limited to, the following repair processes <**typrepproc**>:

a. Skin patch repair.

b. Transparent panel repair.

c. Honeycomb structure repair.

Downloaded from http://www.everyspec.com

d. Extrusion repair.

e. Sealed area repair.

f. Formed structure repair.

g. Plastic repair.

5.2.3.3.1 Repair of new/peculiar structure. Repair instructions and structurally significant or functionally significant information for new or peculiar structure such as tapered skins, sandwich material, honeycomb assemblies, reinforced plastics, and composite materials shall be included in separate typical repair WPs <**typrepwp**> or referenced to an existing TM, as applicable.

5.2.3.4 Specific repair data. Specific repairs shall be developed to cover types of aircraft structural damage which cannot be adequately covered using typical repairs alone. Specific repairs peculiar to vertical take off and landing (VTOL) aircraft and short take off and landing (STOL) aircraft shall be included when applicable. Specific repair WPs <**specrepwp**> (see figure 3) shall be prepared for each major structural group. The data in these WPs shall be presented in the following sequence for each structural group:

a. Damage identification and evaluation data.

b. Typical repair procedures when applicable.

c. Specific repair procedures.

d. Illustrated parts breakdown data.

In addition, a structural group repair visual index illustration WP <**repindxwp**> shall be developed for each major structural group. Each repair index illustration WP shall precede its applicable major structural group WPs. The following shall be included on each index illustration:

a. A view of the structural group (see figure 4). Exploded views may be required to show hidden components. Each component for which instructions are prepared shall be shown.

b. An index number assigned to each illustrated component.

c. A listing (**standard list**) shall begin on the first sheet or sheets of the illustration and shall contain the following entries:

(1) ITEM. This entry shall contain all assigned index numbers in numerical order.

(2) NOMENCLATURE. This entry shall contain the proper nomenclature by which each item is identified throughout the manual.

Downloaded from http://www.everyspec.com

(3) PART NUMBER. This entry shall list the part number for each item.

(4) WP NUMBER. This entry shall contain the number of the WP which contains the damage evaluation instructions.

5.2.3.4.1 Damage identification and evaluation data <**damage**>. Damage identification and evaluation data (refer to 4.7 and 4.8) shall be included for each component covered in the structural group repair WPs. Each applicable category of damage shall be clearly defined for each component. Examples shall be prepared when necessary. Damage evaluation data shall include the following to the extent necessary to guide a technician to the procedure required to repair the aircraft:

a. Material specifications (composition, gauge, temper).

b. Structurally significant/functionally significant information.

c. Identification of damage limits.

d. Wear tolerance charts.

e. Stress classification.

5.2.3.4.2 Typical repair procedures <**typrepproc**>. Typical repair procedures developed for each component shall be referenced, as applicable (refer to 5.2.3.3).

5.2.3.4.3 Aircraft specific repair procedures <**specrepproc**>. Information and procedures shall be included for repairing all major structural assemblies which are identified as repairable. Both temporary repair procedures (including one-time-flight repairs) and permanent repair procedures shall be included. At least one WP shall be prepared for each major assembly. Additional WPs shall be prepared as required because of complexity of the data necessary to thoroughly cover a given assembly. WPs shall be developed for the repair data described in 5.2.3.4.3.1 through 5.2.3.4.3.7.

5.2.3.4.3.1 Airframe sealing. A series of WPs shall be developed that include aircraft specific sealing information and procedures for all areas which require sealing for purposes other than corrosion control. Sealing for corrosion control purposes will be covered under corrosion control. The following shall be included in the airframe sealing WPs:

a. Identification of areas requiring sealing.

b. Type of sealant required in each area.

c. Sealing procedures.

Downloaded from http://www.everyspec.com

d. Precautions to be observed while working with sealing materials.

5.2.3.4.3.2 Fuel tank sealing. Fuel tank sealing shall be covered in a separate WP or WPs.

5.2.3.4.3.3 Pressure testing. WPs shall be developed containing information and procedures for pressure testing of sealed compartments when such testing is required to check for leakage or structural integrity after repair.

5.2.3.4.3.4 Control surface balancing. WPs shall be developed containing information and procedures for mass balancing and dynamic balancing of those hinged control surfaces which have balancing provisions included in their design. Mass balancing shall be covered using calculated methods and using improvised methods with allowable field tolerances.

5.2.3.4.3.5 Removal and installation instructions. WPs shall be developed containing procedures for removal and installation of all repairable structure that is not covered in the organizational level aircraft maintenance WPs.

5.2.3.4.3.6 Local manufacturing or assembling. WPs shall be developed containing information and procedures for local manufacture or assembly for items source coded for local manufacture or assembly when this data is not available from other manuals. In addition, information and procedures shall be included for manufacturing required items such as jigs, templates, supporting fixtures, and unique packing crates when these are not covered in other manuals. Manufacturing procedures shall include dimensions and material requirements.

5.2.3.4.3.7 Repair procedure details. The specific repair procedures covered in 5.2.3.4.3.1 through 5.2.3.4.3.6 shall reflect compliance with all relevant design requirements and include the following data:

a. Definite, positive statements regarding repair decisions to preclude misinterpretation and indecision concerning use of typical repairs.

b. Cautions prohibiting all unauthorized repairs and procedures including combinations which would weaken or over-stiffen structure beyond safe limits.

c. Where loads, material thickness, and margins of safety vary, the following data required to transfer design loads safely shall be included in a table or a series of tables:

(1) Location.

(2) Material thickness.

(3) Fastener size.

(4) Fastener pattern.

Downloaded from http://www.everyspec.com

(5) Fastener spacing.

(6) Doubler overlap.

(7) Bonding requirements.

(8) Reinforcements.

d. Where loads do not vary, identification of typical loads and minimum design tolerance in tension, compression, and shear.

e. Illustrations showing where various types of repairs are to be used.

f. Structurally significant/functionally significant information.

g. Rework tolerances including minimum skin thickness.

h. Contour data.

i. Procedures for constructing templates and repair jigs for use in repairing the assembly.

j. Precautions to be followed when working with toxic, corrosive, or combustible materials.

5.2.3.4.3.8 Illustrated parts breakdown data <**ipb-structdata**>. An illustrated parts breakdown and data applicable to the structure and structural components of the aircraft shall be included in the specific repair data WPs (see figure 3). Refer to 5.2.6 for detailed requirements.

5.2.4 Required corrosion control repair information. Corrosion control data shall contain information and procedures required to inhibit the onset of corrosion, to determine the location and extent of corrosion damage, to remove corrosion, and to apply necessary treatment to prevent further corrosion damage. When structure or components have been damaged by corrosion, applicable structure repair procedures shall be referenced to repair the damage (refer to 5.2.3). Applicable general corrosion control procedures covered in NAVAIR 01-1A-509, Aircraft Weapons Systems Cleaning and Corrosion Control, shall be referenced and not included in the aircraft specific corrosion control WPs. Specific corrosion control data peculiar to vertical takeoff and landing (VTOL) aircraft and short takeoff and landing (STOL) aircraft shall be included when applicable. Aircraft specific corrosion control data shall be divided into the types of WPs described in the following paragraphs. All WPs described in 5.2.4.1 through 5.2.4.3 may have an introduction **<intro>**.

5.2.4.1 Corrosion control materials requirements work package <**cormatwp**>. A separate WP containing lists <**cormatlist**> (**standard list**) of all materials required to complete the procedures detailed in the corrosion control WPs shall be prepared. The following entries shall be shown, as applicable, for each item listed:

Downloaded from http://www.everyspec.com

a. Nomenclature.

b. Government specification number or commercial identification.

c. Application.

5.2.4.2 General information work package <**geninfowp**>.

5.2.4.2.1 Protective covers. Protective covers required for corrosion control shall be identified, and procedures shall be included for installation on the aircraft. Illustrations shall be included as necessary.

5.2.4.2.2 Corrosion prone areas. Those areas on the aircraft which are particularly susceptible to corrosion shall be identified. Illustrations and tables shall be prepared as necessary to aid in locating and identifying corrosion prone areas. Informational charts, when necessary, shall be obtained from the Cognizant Field Activity (CFA).

5.2.4.3 Corrosion control practices work packages. Corrosion control in most cases consists of a method for interrupting the corrosion cycle. When NAVAIR 01-1A-509, Aircraft Weapons Systems Cleaning and Corrosion Control, adequately covers the theoretical aspects of conditions leading to corrosion, it shall be referenced. Specific data required to protect a particular aircraft from damage by corrosion shall be included. Informational charts obtainable from the CFA shall be used, when available, as supplemental source data. The corrosion control practices WPs described in 5.2.4.3.1 through 5.2.4.3.8 shall be prepared, as applicable.

5.2.4.3.1 Typical corrosion control data work packages <**typcorwp**>. Typical corrosion control data is required data applicable to more than one of the structural groups or components separately covered in the manual. To avoid unnecessary duplication, typical corrosion control data shall be presented in separate WPs and referenced as needed (see figure 5).

5.2.4.3.2 Inspection for corrosion work package <**corinspwp**>. Data, illustrated as necessary, shall be prepared for inspecting aircraft structure and components for corrosion and damage from corrosion. Inspection data shall include the following as applicable:

a. Cleaning procedures.

b. Inspection by methods appropriate to the area on the aircraft.

c. Reference to applicable nondestructive inspection manuals for appropriate procedures when required.

d. Criteria for recognizing and evaluating corrosion damage.

Downloaded from http://www.everyspec.com

5.2.4.3.3 Cleaning work packages <**corclnwp**>. A series of WPs shall be prepared containing data for cleaning the entire aircraft and for cleaning selected areas and components as necessary. Illustrations locating and identifying the materials of the exterior surface of the aircraft and areas exposed by movable surfaces shall be prepared. When cleaning requirements are peculiar to the aircraft or its components, detailed procedures shall be included.

5.2.4.3.4 Stripping work packages <**stripwp**>. Data for stripping paint and other protective coatings from the entire aircraft and for stripping selected areas and components as necessary shall be included in a series of WPs or contained in one WP, as applicable. Such data may be obtained from the CFA. When stripping instructions are peculiar to the aircraft or its components, detailed procedures shall be included. Detailed stripping procedures shall include instructions for protecting surrounding areas from contamination during stripping. All required precautions to be observed while handling or using stripping materials and equipment shall be specified.

5.2.4.3.5 Corrosion removal work packages <**corremwp**>. Data for removal of corrosion and corrosion products from aircraft structure and components shall be included in a series of WPs. Typical and specific procedures shall be prepared for all types of corrosion which could occur in each type of metal used on the aircraft.

5.2.4.3.6 Chemical treatment of metal surfaces work packages <**chemtrtwp**>. Data on types of chemical treatment applied during manufacturing and assembling of the aircraft shall be included in a series of WPs. A listing of all chemically treated magnesium and aluminum parts shall be included. The chemical treatment used on each listed part shall be identified by Government specification number and type. If a protective coating has not been qualified to a Government specification, a proprietary identification shall be listed. Touchup of damaged chemically treated surfaces shall be referenced to the applicable general series manual.

5.2.4.3.7 Corrosion control seals and sealants work packages <**corsealwp**>. Data for all areas where seals or sealants are used primarily for corrosion prevention shall be included in a single WP or a series of WPs, as applicable. Sealing which is covered in structure repair instructions (pressurized areas, fuel cells, etc.) shall not be repeated. Types of sealant and areas where applied during manufacturing shall be identified. Sealant identification shall be by Government specification number and type. When there is no applicable Government specification, a proprietary identification shall be listed. Illustrations and/or tables shall be prepared to show location of form-in-place seals. General series manuals for aircraft corrosion control shall be referenced for use in restoring and maintaining seals and sealants. The manufacturer's instructions shall be included (directly or by reference) for applying proprietary products.

5.2.4.3.8 Paint systems work packages <**paintsyswp**>. Data for the paint systems used on the aircraft shall be included in a single WP or a series of WPs. Illustrations and tables identifying the complete finish system (undercoat through finish coat) applied by the manufacturer on all areas of the exterior of the aircraft and areas exposed by movable surfaces shall be included. All materials listed shall be identified by Government specification and type and, when significant, by manufacturer's identification. Locations and restoration of exterior and interior markings shall

Downloaded from http://www.everyspec.com

also be included. Touchup and repainting (i.e., method of application) procedures shall not be included.

5.2.4.3.8.1 Exterior marking. Illustrations and tables showing location and configuration, including wording, orientation, and, where significant, size of all exterior markings applied by the manufacturer, shall be included. Applicable specification and general series manuals shall be referenced for restoration of exterior markings.

5.2.4.3.8.2 Interior markings. Illustrations and tables showing location, configuration, wording, orientation, and, where significant, size of instructional markings applied by the manufacturer on the interior of the aircraft shall be included. Markings such as part numbers, reference designation numbers, and those on plates which are part of an assembly shall be omitted. Applicable specifications and general series manuals shall be referenced for restoration procedures for interior markings.

5.2.5 Required nondestructive inspection data requirements. Aircraft nondestructive inspection (NDI) data shall include guidance and instructions for trained personnel in use of nondestructive inspection methods on peculiar aircraft structure and structural components. All WPs described in 5.2.5.1 through 5.2.5.4 may have an introduction **<intro>**. The data shall include instructions, procedures, and techniques applicable to the aircraft for NDI methods such as liquid penetrant, magnetic particle, eddy current, ultrasonic, and radiographic. Other methods shall be included when they provide significant improvement in inspection capabilities and are authorized by the requiring activity. Routine visual inspections (unaided eye, magnifying glass, borescope, optical fiber) normally shall not be included when such inspections are adequately covered in other maintenance manuals applicable to the aircraft. Detailed procedures for correcting defects shall be omitted. Specific NDI methods peculiar to vertical takeoff and landing (VTOL) aircraft and short take off and landing (STOL) aircraft shall be included when applicable. Aircraft nondestructive inspection data shall be divided into the following types of WPs:

5.2.5.1 Nondestructive inspection general information work package <**ndigeninfowp**>. General information relevant to nondestructive inspection of aircraft structure and structural components shall be included. Data on frequency of nondestructive inspections and examples of defects, supported by illustrations, shall be included to aid nondestructive inspection personnel in the definition of suspected defects.

5.2.5.2 Nondestructive inspection typical procedures work packages <**nditypwp**>. Typical nondestructive inspection procedures are those which are applicable to more than one structural group or component (see figure 6). To avoid unnecessary duplication, typical procedures shall be presented in a series of separate WPs and referenced as needed. Repetitive setup and test equipment adjustment procedures are considered typical procedures. When nondestructive inspection procedures contained in available general manuals are acceptable for use, this data shall be referenced.

5.2.5.3 Nondestructive inspection index work package <**ndindxwp**>. A visual repair index WP shall be prepared showing the location of nondestructive inspection data for each structural group

Downloaded from http://www.everyspec.com

and component covered in the WPs. Each repair index illustration WP shall precede its applicable major structural group WPs (see figure 7). The following shall be included on each index illustration:

a. Views of the aircraft, exploded as necessary, to clearly show location of each structural group and component covered by a technical content WP in the manual.

b. An index number assigned to each structural group and illustrated component.

c. A listing <**ndindxlist**> (**standard list**) shall begin on the first sheet or sheets of the illustration and shall contain the following entries:

(1) ITEM. This entry shall contain all assigned index numbers in numerical order.

(2) NOMENCLATURE. This entry shall contain the proper nomenclature by which each item is identified throughout the manual.

(3) WP NUMBER. This entry shall contain the number of the WP which contains the damage evaluation instructions.

5.2.5.4 Nondestructive inspection specific procedures work packages <**ndispecwp**>.

a. Specific nondestructive inspection procedures shall be prepared when a structural group or component can be inspected by NDI methods and one of the following criteria applies:

(1) A saving in maintenance costs or manpower will be realized by using NDI methods.

(2) Operational effectiveness will be favorably affected.

(3) Safe operation or reliability will be improved by using NDI methods.

b. Each structural group or component shall be covered in a separate WP. The technical content of each WP shall include the following arranged in the sequence listed:

(1) Item nomenclature <**itemnom**>.

(2) Item description <**itemdesc**>.

(3) Defect description <**defdesc**>.

(4) Primary NDI procedure <**pripro**c>.

(5) Backup NDI procedure <**bkupproc**> (if required).

Downloaded from http://www.everyspec.com

5.2.5.4.1 Item nomenclature <**itemnom**>. The item to be inspected shall be identified by nomenclature consistent with IPB nomenclature for the item. When necessary for positive identification, part number shall be included.

5.2.5.4.2 Item description <**itemdesc**>. The following information shall be specified as applicable to the item to be inspected:

a. Material from which manufactured.

b. Heat treatment condition.

c. Method of manufacture (cast, forged, extruded, rolled, etc.).

d. Surface chemical treatment.

e. Finish coatings.

f. A concise statement of the purpose or function of the item. This shall include type and direction of load carried when pertinent.

5.2.5.4.3 Defect description <**defdesc**>. The potential defect shall be described. This shall include:

a. Characterization of the defect with respect to type (fatigue crack, delimitation, etc.).

b. Critical size.

c. Criteria such as material thickness; heat treatment condition; assembly details of electronic, pyrotechnic or mechanical components, etc., which influence choice of NDI method.

d. Location and orientation with respect to loading or grain direction. Illustrations shall be used as necessary.

5.2.5.4.4 Primary NDI procedure <**priproc**>. A primary nondestructive inspection procedure <**proc**> shall be specified for each item to be inspected. Selection of the primary method shall be based on type of material and overall suitability of the chosen method for achieving desired results. The following factors also shall be considered in selecting the primary method:

a. There is maximum assurance that the method will detect the potential defect.

b. The method can be applied with minimum disassembly of the aircraft.

5.2.5.4.5 Backup NDI procedure <**bkupproc**>. A backup nondestructive inspection procedure <**proc**> shall be required in each case where the primary procedure does not include incontestable data for determining serviceability of the item inspected. When the primary

Downloaded from http://www.everyspec.com

procedure uses an instrumented method (electromagnetic, ultrasonic, radiographic), a visual method (optical, magnetic particle, penetrant) is preferred for backup providing extensive disassembly is not required.

5.2.5.5 Content of NDI procedures. Each nondestructive inspection procedure (primary or backup) shall include the following as applicable:

a. Illustrations for NDI procedures (refer to 5.2.5.5.1).

b. Local manufacturing of NDI support equipment (refer to 5.2.5.5.2).

c. Frequency of NDI (refer to 5.2.5.5.3).

d. Preparation for NDI testing (refer to 5.2.5.5.4).

e. Acceptance/Rejection criteria (refer to 5.2.5.5.5).

f. Post inspection cleaning and corrosion control (refer to 5.2.5.5.6).

g. Specific NDI testing method minimum requirements (refer to 5.2.5.5.7).

5.2.5.5.1 Illustrations for NDI procedures. Each inspection procedure shall include illustrations as necessary to support procedural text. As a minimum, the following shall be illustrated:

a. General location of the inspection area within the aircraft.

b. Specific location of the item to be inspected.

c. Location and orientation of potential defects.

5.2.5.5.2 Local manufacturing of NDI support equipment. Procedures, including sketches, for local manufacturing of required standards, shoes, wedges, fixtures, and jigs shall be included as necessary. Materials, dimensions, surface finish, and tolerances shall be specified.

5.2.5.5.3 Frequency of NDI. Frequency of NDI shall be specified. When this requirement is covered in an applicable periodic maintenance requirements card deck, the card deck shall be referenced in lieu of repeating the requirement in the NDI WPs.

5.2.5.5.4 Preparation for NDI testing. Preparation for testing shall contain all procedures necessary to prepare the aircraft and the item to be inspected for implementation of the specified nondestructive inspection procedure. Procedures contained in other available manuals shall be referenced rather than repeated. Procedures shall include the following:

a. Instructions for placing the aircraft in proper configuration.

Downloaded from http://www.everyspec.com

b. Instructions for gaining access to the item to be inspected.

c. Instructions such as cleaning, paint removing, and disassembling as necessary to prepare the item for inspection.

5.2.5.5.5 Acceptance/Rejection criteria. Reference shall be made to applicable structure repair WPs or manuals for detailed acceptance/rejection criteria.

5.2.5.5.6 Post inspection cleaning and corrosion control. When necessary, procedures shall be prepared for post inspection cleaning of the component and the inspection area. Procedures shall also be included for restoring lubricants, sealants, and protective coatings which have been disturbed during the inspection process. Procedures for restoring the aircraft to operational configuration shall be included. Procedures contained in other available manuals shall be referenced rather than repeated.

5.2.5.5.7 Specific NDI testing method minimum requirements. Each nondestructive inspection procedure, whether identified as the primary procedure or as a backup procedure, shall include as a minimum the testing information listed in 5.2.5.5.7.1 through 5.2.5.5.7.5 for the method specified. Inspection testing procedures shall include illustrations as necessary to support procedural text.

5.2.5.5.7.1 Liquid penetrant method. Include the following:

a. Preparation for testing (refer to 5.2.5.5.4).

b. Method of application of inspection materials.

c. Sensitivity and limitations of the penetrant material.

d. Dwell times for penetrant, emulsifiers, and developers. This shall include an indication of the temperatures at which the dwell times are valid.

e. Lighting requirements.

f. Magnification requirements (when necessary).

g. Post inspection cleaning and corrosion control (refer to 5.2.5.5.6).

5.2.5.5.7.2 Magnetic particle method. Include the following:

a. Preparation for testing (refer to 5.2.5.5.4). This shall include identification and instructions for removal from the inspection area of all sensitive equipment which could be adversely affected by magnetic flux.

b. Type of magnetizing current (AC/DC).

Downloaded from http://www.everyspec.com

c. Orientation of the magnetic field (longitudinal, circular, combined longitudinal - circular).

d. Flux density (current requirements to produce the desired strength in the magnetic field).

e. Location of coil or coils. This shall include information on contact between the item under test and the coil(s).

f. Number and duration of "Shots."

g. Location and cause of nonrelevant indications.

h. Magnification requirements (when necessary).

i. Demagnetization procedures. This shall include pertinent information concerning acceptability of a residual magnetic field after demagnetization.

j. Post inspection cleaning (refer to 5.2.5.5.6).

5.2.5.5.7.3 Eddy current (electromagnetic) method. Include the following:

a. Preparation for testing (refer to 5.2.5.5.4). This shall include equipment setup procedures such as adjusting for sensitivity and lift off. Step-by-step procedures shall be given to obtain desired meter deflection and CRT display for impedance plane from a standard or setup block.

b. Instructions for local manufacture of standards and setup blocks when required (refer to 5.2.5.5.2).

c. Area to be scanned.

d. Number of passes, probe translation, and scan rate.

e. Possible cause and location of nonrelevant indications.

5.2.5.5.7.4 Ultrasonic method. Include the following:

a. Preparation for testing (refer to 5.2.5.5.4). This shall include step-by-step procedures for adjusting the equipment to produce a desired response from a defect standard. Illustrations shall be included as necessary to show without reference to dial settings: adjustment of sweep delay, sweep length, markers, and response amplitude.

b. Instructions for local manufacture of standards (refer to 5.2.5.5.2).

c. Area to be scanned.

d. Application and type of couplant.

Downloaded from http://www.everyspec.com

e. Transducer movement. Changes in response signals in relation to transducer scanning shall be described or illustrated.

f. Defect response. Illustrations shall show cathode ray tube display in relation to transducer location.

g. Possible cause and location of nonrelevant indications.

h. Post inspection cleaning (refer to 5.2.5.5.6).

5.2.5.5.7.5 Radiographic method. Include the following:

a. Preparation for testing (refer to 5.2.5.5.4). This shall include the following:

(1) Film placement. When more than one film is to be used, the number shall be stated and location of each film shall be identified.

(2) Location of the film identification marker. Use of a lead number belt shall be prescribed.

(3) Aiming point. Two dimensions shall be given for location.

(4) Location of source. Three dimensions are required, including focal point to film or focus point to aiming point. All reference points must be easily recognizable on typical, service configured aircraft. Angles shall not be used to indicate location references.

(5) Penetrameter location when required.

(6) Equipment settings (kilovoltage, milliamperage, and exposure times).

(7) Step-by-step inspection procedure. Radiation hazard warnings shall be included as necessary.

(8) Required density expressed in terms of the Hurter and Driffield (H & D) curve. The area on the film where density is to be measured shall be specified.

(9) Special film reading requirements when required.

5.2.6 Illustrated parts breakdown <**ipb-structdata**>. An IPB and data applicable to the structure and structural components of the aircraft are an integral part of the technical data to be prepared in support of the specific repair data WPs (refer to 5.2.3.4). This IPB data shall be included in the specific repair data WPs.

Downloaded from http://www.everyspec.com

5.2.6.1 Technical content. Technical content of the IPB shall be provided as prescribed in MIL-STD-3001-4, except as follows:

a. The Group Assembly Parts List (GAPL) may be expanded to include additional structural repair data, such as material and stock size (see figure 8).

b. The "Figure specific" method of identifying "USABLE ON CODES" shall be used.

6. NOTES

The notes in section 6 of MIL-STD-3001-1 apply to this Part.

Downloaded from http://www.everyspec.com

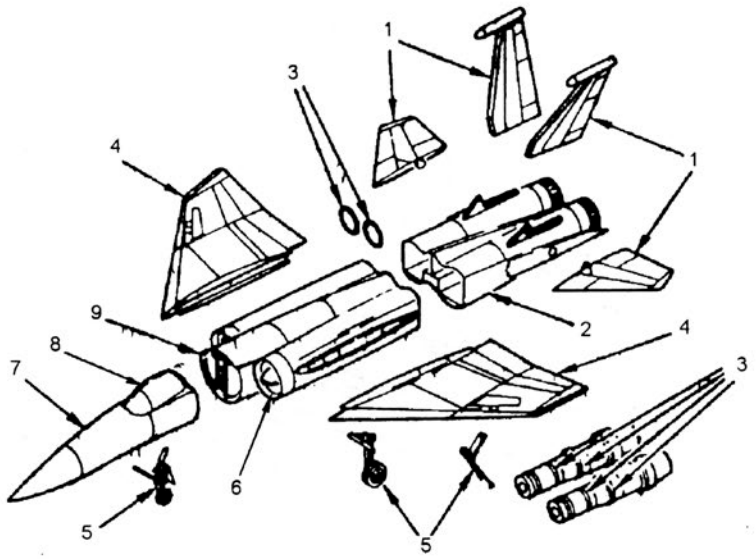

ITEM	NOMENCLATURE	WP/VOLUME NUMBER
1	Empennage	A1-F27AA-SRM-030
2	Aft Fuselage	A1-F27AA-SRM-030
3	Engine Support	A1-F27AA-SRM-040
4	Wing	A1-F27AA-SRM-020
5	Landing Gear	A1-F27AA-SRM-040
6	Air Intake Duct	A1-F27AA-SRM-020
7	Forward Fuselage	WP 003 00
8	Canopy	WP 047 00
9	Center Fuselage	A1-F27AA-SRM-020

FIGURE 1. Example of an aircraft structure index.

Downloaded from http://www.everyspec.com

A1–AV8BB-SRM-200 **026 00**
1 October 1988

ORGANIZATIONAL, INTERMEDIATE, AND DEPOT MAINTENANCE

CRASH HANDLING

F/A–18

Reference Material

Airborne Weapons/Stores Loading Manual A1–AV8BB-LWS-000
Line Maintenance Access Doors A1–AV8BB-GAI–200
Alphabetical Index ..... WP 001 00
Line Maintenance Emergency Procedures A1–AV8BB-GAI-300
Crew Removal ..... WP 003 00
Line Maintenance Procedures A1–AV8BB-GAI-100
Electrical Power Application and Removal ..... WP 003 00
Hydraulic Power Application and Removal ..... WP 008 00
Aircraft Jacking ..... WP 024 00
Plane Captain Manual A1–AV8BB-GAI-500
Safety Devices Required During All Ground Operations ..... WP 004 00

Support Equipment Required

Nomenclature	Part Number	CAGE Code
Aircraft Multiple Leg Hoisting Sling	75D110000–1001	42651
Airplane Crane Truck-Ashore	MB-1A	64580
Crane-Afloat	NS-60	82460
Salvage Trolly	-	-
Torque Wrench, 150 to 750 Inch Pounds	-	-
Wing Steadying Strap	-	-

1-1. INTRODUCTION.

1-2. This work package contains information for recovery of a crash damaged aircraft.

2-1. DESCRIPTION.

2-2. Every crash damaged aircraft will be evaluated on an individual basis and moved depending on surrounding terrain and aircraft condition. It may have to be raised, leveled or supported before being towed to a suitable location for further evaluation. The following paragraphs contain typical methods for moving crash damaged aircraft.

3-1. SAFETY PRECAUTIONS.

CAUTION

Every attempt must be made to keep crash damaged aircraft from additional damage.

1. Emergency procedures for crew removal (A1–AV8BB-GAI-300).
2. Make sure hydraulic power is removed from aircraft (A1–AV8BB-GAI-100).
3. Make sure electrical power is removed from aircraft (A1-AV8BB-GAI-100).

1

FIGURE 2. Example of a general aircraft structural information work package.

Downloaded from http://www.everyspec.com

4. Install ground safety devices (A1-AV8BB-GAI-500).

5. Make sure wing stores or external fuel tanks are removed (A1-AV8BB-LWS-000).

4-1. CRASH DAMAGE INDEX.

4-2. A crashed aircraft may be in one or more of the following conditions. The determining factors will be location, amount of time to recover, and availability of equipment. Select method that is applicable.

5-1. COMPLETE LANDING GEAR COLLAPSED.

5-2. This paragraph contains procedures, support equipment required and materials required for recovery of an aircraft with all landing gear collapsed.

1. Make aircraft safe (paragraph 3-1).

2. Move aircraft per applicable method listed below:

   a. Drag off (paragraph 9-1).

   b. Lifting

      (1) Lift aircraft by hoisting (paragraph 8-1) or jacking (paragraph 12-1).

      (2) Position salvage trolley under aircraft at CG location.

      (3) Tow aircraft to suitable location for further evaluation.

6-1. NOSE LANDING GEAR COLLAPSED.

6-2. This paragraph contains procedures, support equipment required and materials required for recovery of an aircraft with the nose landing gear collapsed.

1. Make aircraft safe (paragraph 3-1).

2. Lift nose of aircraft per applicable method.

   a. Hoisting (paragraph 8-1).

   b. Jacking (paragraph 12-1).

3. Lower NLG or position salvage trolley under nose of aircraft.

4. Tow aircraft to suitable location for further evaluation.

FIGURE 2. Example of a general aircraft structural information work package - Continued.

Downloaded from http://www.everyspec.com

A1–AV8BB-SRM-230 **029 00**
1 January 1996

ORGANIZATIONAL, INTERMEDIATE, AND DEPOT MAINTENANCE

EXTERNAL HEAT SHIELD ASSEMBLY

F/A-18

Reference Material

Nondestructive Inspection Methods ..... NAVAIR 01-1A-16
Structure Repair – Repairs and Replacement A1-AV8BB-SRM-250
Fastener and Fastener Hole Repairs ..... WP 005 00
Fire Shield and Heat Shield Repairs and Replacements Index ..... WP 021 00

1-1. INTRODUCTION.

1-2. This work package contains damage evaluation, damage limits, repair index and parts and material index on the aft center fuselage external heat shields. The external heat shields are interchangeable assemblies.

2-1. DAMAGE EVALUATION.

2-2. For damage evaluation of the aft center fuselage external heat shields, see the paragraphs below.

2-3. ORGANIZATIONAL. Visual inspection of dents, gouges, cracks, loose or missing fasteners, and wear at heat shield attachments.

2-4. INTERMEDIATE. Nondestructive inspection of visible damage using ultrasonic inspection (NAVAIR 01-1A-16). Damage evaluation past this level of maintenance will not be necessary until the structural integrity values of the heat shield are in question.

2-5. DEPOT. Damage at this level will be determined on an individual basis.

3-1. DAMAGE LIMITS.

3-2. For damage limits on the aft center fuselage external heat shields, see the paragraphs below. The limits for specified damage will be as follows, provided the structural integrity values of the part in question are not decreased.

3-3. ORGANZATIONAL. Loose or missing fasteners will be replaced as needed. Cracks are limited to 4 inches in length anywhere on the aft portion of the heat shield. Maximum freeplay of heat shield is 0.025, measured at aft end of each portion. Wear that exceeds 0.025 will require repair or replacement of worn parts. Worn links/brackets/angles will be reamed to next applicable sizes or replaced. Any worn bolts/pins/collars on the aft portion of the heat shield that are below minimum limits will be replaced (A1-AV8BB-SRM-250).

3-4. INTERMEDIATE. Damage limits at this level of maintenance will be determined on an individual basis according to the size and extent of repair required past the organizational level of maintenance.

3-5. DEPOT. Damage limits at this level of maintenance will be determined on an individual basis according to the size and extent of repair required past the organizational and intermediate levels of maintenance.

4-1. ORGANIZATIONAL REPAIR INDEX.

4-2. Maintenance of this level will include the repairs listed below.

4-3. LOOSE OR MISSING FASTENER REPLACEMENT. For fastener repairs (A1-AV8BB-SRM-250)

4-4. AFT EXTERNAL HEAT SHIELD REPAIR. For heat shield repair (A1-AV8BB-SRM-250).

1

FIGURE 3. Example of a specific repair data work package.

Downloaded from http://www.everyspec.com

A1–AV8BB-SRM-230 **029 00**

4-5. AFT EXTERNAL HEAT SHIELD LINKS/PINS REPAIR. This repair is good on ships up to 163853. There are two types of repairs approved. One repair uses bolts and nuts, the other uses manufactured repair pins. Both repairs can be used in any and all situations. The wear limits for links/brackets are given in Table 1 (A1-AV8BB-SRM-250). The maximum wear limit is given in each case. Any measurement that exceeds that limit will require the link/bracket to be reamed to the next applicable size hole, or replaced. Disconnect links at position 6, 10, 11, 14 and 15. The wear limits of the bolts/pins are given in Table 2. The minimum wear limit is given in each case. Any measurement that drops below that limit will require replacement of the bolt/pin. For repair (A1-AV8BB-SRM-250).

4-6. SUPPORT LINK BRACKET NO. 9 REPLACEMENT. Bracket No. 9 should be replaced only if the fasteners become loose. This replacement occurs only on ships 161573 thru 162973. For repairs (A1-AV8BB-SRM-250).

4-7. EXTENSION OF HEAT ACCESS PANEL. For extension procedures (A1-AV8BB-SRM-250).

4-8. FORWARD EXTERNAL HEAT SHIELD ATTACHMENT ANGLE REPAIR. If attach angles on forward heat shield become worn at pin locations, the attach angle slots for pins and collars should be oversized and fitted with nuts and bolts or replaced. For repairs (A1-AV8BB-SRM-250).

5-1. INTERMEDIATE REPAIR INDEX.

5-2. Maintenance at this level will include all the repairs at the organizational level. At this time there are no specific repairs approved for this level. Repairs will be based on an individual basis.

6-1. DEPOT.

6-2. Maintenance at this level will include all the repairs at the organizational and intermediate level. At this time, there are no specific repairs approved for this level. Repairs will be based on an individual basis.

7-1. ILLUSTRATED PARTS BREAKDOWN (IPB).

7-2. Figure 1 lists and identifies parts and materials used on the heat shield bracket assembly.

2

FIGURE 3. Example of a specific repair data work package - Continued.

Downloaded from http://www.everyspec.com

A1–AV8BB-SRM-230 **029 00**

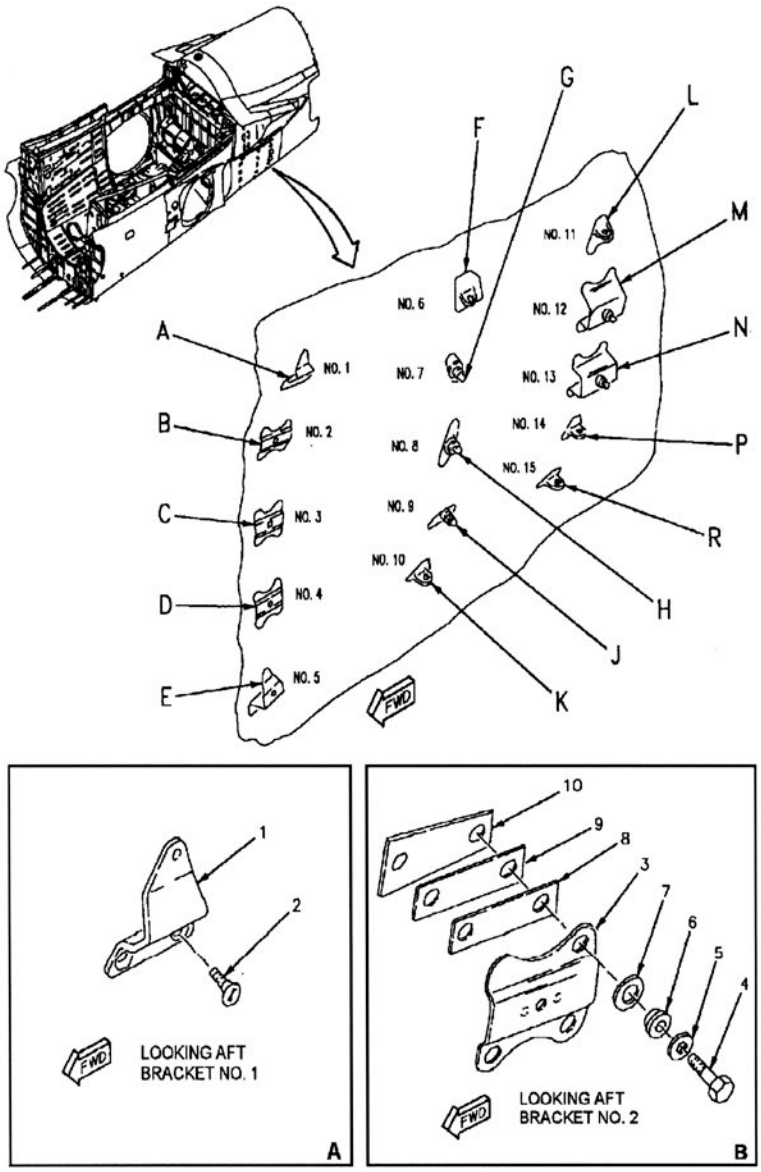

Figure 1. Heatshield Bracket Assembly, AV-8B-161573 thru 164547, TAV-8B-162747 and up (Sheet 1)

3

FIGURE 3. Example of a specific repair data work package - Continued.

Downloaded from http://www.everyspec.com

A1-AV8BB -SRM-230 **029 00**

INDEX NO.	PART NUMBER	DESCRIPTION 1 2 3 4 5 6 7	MAT	STOCK SIZE	UNITS PER ASSY	USE ON CODE	SM&R CODE
	75A327108-1003	HEATSHIELD BRACKETS-ASSY OF LH (K0289) (NHA, WP028 00, FIG 3)			REF	A	XCOZZ
	75A327108-1005	SEE ABOVE LH			REF	B	XCOZZ
	75A327108-1007	SEE ABOVE LH			REF	C	XCOZZ
	75A327108-1009	SEE ABOVE LH			REF	K	XCOZZ
	75A327108-1004	SEE ABOVE RH.....			REF	A	XCOZZ
	75A327108-1006	SEE ABOVE RH.....			REF	B	XCOZZ
	75A327108-1008	SEE ABOVE RH.....			REF	C	XCOZZ
	75A327108-1010	SEE ABOVE RH.....			REF	K	XCOZZ
	75A327108-1003	• BRACKET NO. 1 LH (K0289).....			1		PAOZZ
	75A327108-1004	• •SEE ABOVE RH.....			1		PAOZZ
	75A327108-2005	• •BRACKET LH (K0289)			1		XBOZZ
1	75A327108-2006	• •BRACKET RH (K0289).....			1		XBOZZ
	MS21060L5	• •PLATENUT (USE WITH INDEX 1)..			1		PAOZZ
	75A327481-2003	• •PACKING LH (USE WITH INDEX 1)			1		XBOZZ
	75A327481-2004	• •PACKING RH (K0289) (USE WITH INDEX 1)			1		XBOZZ
2	NAS663V3HT	BOLT.....			3		PAOZZ
	MS2106013	PLATENUT (USE WITH INDEX 2).....			3		PAOZZ

Figure 1. Heatshield Bracket Assembly, AV-8B-161573 thru 164547, TAV-8B-162747 and up (Sheet 1).

4

FIGURE 3. Example of a specific repair data work package - Continued.

Downloaded from http://www.everyspec.com

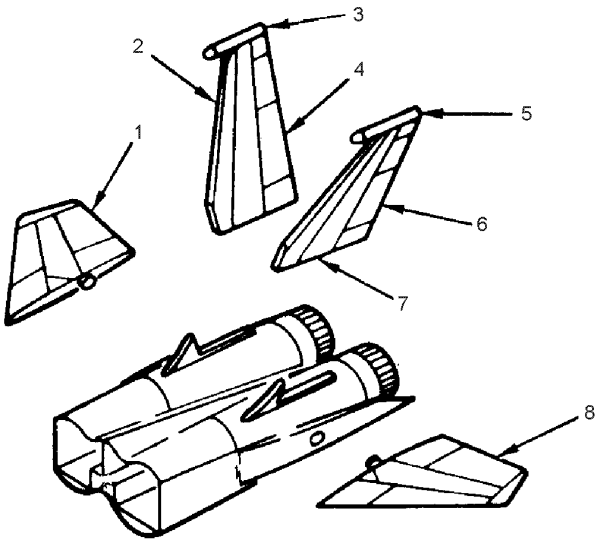

ITEM	NOMENCLATURE	PART NUMBER	WP NUMBER
1	Right Stabilator	68A210001-1	027 00
2	Right Vertical Stabilizer	68A250001-1	038 00
3	Right Vertical Stabilizer Tip	68A230163	045 01
4	Right Rudder	68A240001-1	053 00
5	Left Vertical Stabilizer Tip	68A230173	045 02
6	Left Rudder	68A240001-2	053 00
7	Left Vertical Stabilizer	68A250001-2	038 00
8	Left Stabilator	68A210001-2	027 00

FIGURE 4. Example of a structural group repair index.

Downloaded from http://www.everyspec.com

A1-F18AC-SRM-500 **003 00**
1 February 1995

ORGANIZATIONAL MAINTENANCE

GENERAL INFORMATION

AIRCRAFT CORROSION CONTROL

Reference Material

Cleaning ..... WP 006 00
Stripping ..... WP 007 00
Chemical Treatment ..... WP 008 00
Priming Procedures ..... WP 011 00
Finish System ..... WP 012 00
Aircraft Weapons Systems Cleaning and Corrosion Control ..... NAVAIR 01-1A-509
Plane Captain Manual A1-F18AC-PCM-000

Materials Required

Nomenclature	Specification/Part Number	HMWS Index Number
Paper, Kraft, Untreated	A-A-203	-
Plastic Sheet	LP378TY1	-
Tape, Adhesive	MIL-T-21595 TYPE 1	-
Tape, Insulation	421	-
Tape, Pressure Sensitive	MIL-T-23397 II	-
Tape, Pressure Sensitive	425	-

1-1. DESCRIPTION.

1-2. The F/A-18A, B, C and D aircraft are a composition of aluminum, graphite epoxy, fiberglass, titanium, and steel. The airframe is primarily made of aluminum. Graphite epoxy composite and fiberglass are used for many skins and doors. Titanium is also used for skins and doors. Where maximum strength is required, beta annealed bar, plate, and forgings are used. High strength steel is used in landing and arresting gear. Hydraulic tube assemblies are titanium.

1-3. TYPES OF CORROSION. Information on types of corrosion, cause, and appearance is contained in NAVAIR 01-1A-509.

1-4. PROTECTIV E COVERS. Protective covers are necessary to aid in protecting aircraft during non-operational times. Protective covers are required for corrosion control. Procedures for installation and removal are contained in A1-F18AC-PCM-000, ground protective devices.

1-5. SAFETY PRECAUTIONS.

1. Avoid extended breathing of solvent vapors. If this is impossible, wear a respirator.
2. Do not use solvents in vicinity of smoking, sparks or open flames. Flammable solvents are extremely easy to ignite and fires may occur with explosive violence. After using flammable solvents, be certain that no traces linger on clothes or person before entering a smoking area.
3. Wear safety glasses or goggles, and rubber gloves while working with solvent.
4. Do not smoke while working with flammable solvents or while in a no-smoking area.

1

FIGURE 5. Example of a typical corrosion control repair work package.

Downloaded from http://www.everyspec.com

5. Bare filament heaters or other sources of ignition, including metal objects on shoes, are prohibited in flammable solvent areas. Electrical equipment, including flashlights, shall be explosion proof. Avoid any action which may create sparks, including dragging of steel drums, metal work stands or similar objects across a concrete floor.

6. Any area larger than one square foot cleaned with a cloth moistened with a flammable solvent shall be grounded during cleaning operation.

7. Isolate flammable solvent storage areas from areas of fire hazard. Electrically ground all equipment in storage area. Electrically bond dispensing and receiving containers to each other while transferring flammable solvents between containers.

8. Store and handle solvents in properly labeled safety containers and keep them closed while not in use.

9. Store solvents in cool, well ventilated areas.

10. Do not use heat producing devices to accelerate drying.

11. Dispose of all used rags, cloths, in safety disposal containers.

12. When using solvents, to reduce fire/toxic hazards, only amounts needed for short period of time should be available in work area.

13. Avoid eye/skin contact when using accelerator components because they contain reactive oxides and solvent blends which are flammable, toxic, and irritant.

14. Avoid contact with liquid nitrogen. Skin contact will cause severe destruction of body tissue by freezing.

15. Gloves are required to handle containers after removal from liquid nitrogen.

16. Spray operators must wear respirators during spray applications. Coveralls and protective barrier cream applied to bare skin is required for personal protection.

17. Only spray operator(s) will be permitted in overspray area.

18. After each job, or before break periods, spray operator(s) must thoroughly wash all exposed areas of skin using soap and water.

19. No food or drink shall be allowed in or near solvent, sealant, or spray areas.

20. When using chemical treatment, protective equipment must be worn, because solution is acidic and contains fluorides.

21. Stripper specified in this manual will burn skin on contact. Adequate protective clothing, including face shield and rubber gloves, shall be worn. If stripper contacts eyes, flush with water for 15 minutes and seek medical aid.

1-6. MASKING.

1-7. Windshield/Canopy Transparency Double Masking.

NOTE

Windshield/canopy transparencies must be double masked when cleaning (WP 006 00), stripping (WP 007 00), chemical treatment (WP 008 00), priming procedures (WP 011 00) and finish system (WP 012 00) is applied.

1. Cut one piece of plastic sheet slightly smaller than windshield transparency.

FIGURE 5. Example of a typical corrosion control repair work package - Continued.

Downloaded from http://www.everyspec.com

2. Cut one piece of plastic sheet slightly smaller than canopy transparency.

3. Tape plastic sheet around periphery of surrounding structure using 425 tape.

4. Cut one piece of plastic sheet slightly larger than windshield transparency.

5. Cut one piece of plastic sheet slightly larger than canopy transparency.

6. Position periphery of plastic sheets slightly beyond previously applied plastic sheets.

7. Apply 425 tape around periphery of plastic sheets overlapping previously applied tape.

8. Make sure all seams of tape are secure to structure to prevent any damaging materials from entering.

1-8. Nonmetallic Surfaces Double Masking.

NOTE

Nonmetallic surfaces require double masking when: cleaning (WP 006 00), stripping (WP 007 00) or chemical treatment (WP 008 00).

1. Cut one piece of plastic sheet slightly smaller than area to be covered.

2. Tape plastic sheet around periphery of surrounding structure using 421 or MIL-T-23397 tape.

3. Cut one piece of plastic sheet slightly larger than area to be covered.

4. Position periphery of plastic sheet slightly beyond previously applied plastic sheet.

5. Apply 421 or MIL-T-23397 tape around periphery of plastic sheet overlapping previously applied tape.

6. Make sure all seams of tape are secure to structure to prevent any damaging materials from entering.

1-9. General Masking of Aircraft.

1-10. Untreated kraft paper applied with MIL-T-21595 tape is used to cover areas not receiving cleaning (WP 006 00), stripping (WP 007 00), chemical treatment (WP 008 00), priming (WP 011 00) or finish system (WP 012 00).

NOTE

Areas too small for untreated kraft paper may be masked with MIL-T-21595 tape only.

FIGURE 5. Example of a typical corrosion control repair work package - Continued.

Downloaded from http://www.everyspec.com

A1-F18AC-SRM-300 **004 00**
1 December 1992

ORGANIZATIONAL MAINTENANCE

NONDESTRUCTIVE INSPECTION PENETRANT METHOD

F/A-18

Reference Material

Aircraft Corrosion Control A1-F18AC-SRM-500
Stripping ..... WP 007 00
Military Specification, Inspection Materials, Penetrant ..... MIL-I-25135, REV E or Most Current
Naval Aviation Maintenance Program ..... OPNAVINST 4790.2
Nondestructive Inspection methods ..... NAVAIR 01-1A-16
Plane Captain Manual A1-F18AC-PCM-000

Support Equipment Required

Nomenclature	Part Number	CAGE Code
Black Light Capable of 1000MW Over 6 Inch Circle 15 Inches from Bulb Face	(M-16)	42201
Portable Fluroescent	ZA43 Penetrant Inspection Kit	54620
Ultraviolet Meter	J-221	62040

Materials Required

Nomenclature	Specification/Part Number	HMWS Index Number
Cleaning Cloth	CCC-C-46, TYPE I, CLASS 4	-
Penetrant, Type 1, (Fluorescent), Method C, (Solvent Removable), Sensitivity Level 2 or 3, Class 2, Solvent Remover (Non-halogenated) and Nonaqueous Developer	MIL-I-25135	-
1,1,1-Trichloroethane	0-T-620 TY1	12
Tube Type marker	673T	-

1-1. INTRODUCTION.

1-2. Penetrant inspection is nondestructive inspection for discontinuities open to surface in parts made of nonporous materials. This is done by treating surface area with fluid which penetrates surface discontinuity. Excess penetrant not in discontinuity is removed and penetrant remaining in discontinuity returns to surface by capillary action. Developer is applied to provide contrasting surface, and through absorption forms indication large enough to be visible to eye. Visual indications become distinct by fluorescence of penetrant under black light. This method is effective for detecting defects open to surface in forgings, castings, extrusions, formed sections, webs, and skins of ferrous or nonferrous material. Penetrant method of inspection requires surface inspection area be thoroughly cleaned and stripped of paint or other surface coatings, for example, dry film lubricant.

2-1. SAFETY PRECAUTIONS.

1. Make sure safety requirements have been met before using electrical equipment near aircraft fuel cells, oxygen systems, and stores (A1-F18AC-PCM-000).

1

FIGURE 6. Example of a nondestructive inspection typical procedures work package.

Downloaded from http://www.everyspec.com

2. Refer to NAVAIR-01-1A-16 for other safety precautions to be followed when doing penetrant inspection.

2-2. PERSONNEL QUALIFICATIONS. Personnel doing this nondestructinve inspection should be qualified and certified to do penetrant inspections per OPNAVINST 4790.2 SERIES, NDI Technicians, NEC 7225/MOS 6044.

3-1. LIGHTING REQUIREMENTS.

1. In inspection booth, white light shall be less than 2 foot-candles and black light intensity shall be at least 1000 micro-watts at surface of part. When checking background white light intensity, black light must be turned off or removed from inspection area.

2. For on-aircraft inspections, surface under inspection must be heavily shaded, and black light shall be held close as possible to ensure bright indication. To inspect lighting adequacy, use pin or other sharp object to draw thin line of penetrant on part near inspection area. This line should be bright and distinct.

4-1. PREPARATION OF PART.

CAUTION

Do not do prepenetrant etching on steel parts. Acid used for etching can cause embrittlement or corrosion of critical structure.

1. Part must have finish system removed before inspection. Refer to specific procedure work package for details. If specific procedure work package does not exist, chemically remove finish system (A1-F18AC-SRM-500).

1,1,1-Trichloroethane, 0-T-620TY1 12

2. Clean inspection area(s) with solvent-moistened cloth to make sure inspection area(s) is free of contamination or foreign material.

5-1. INSPECTION PROCEDURE.

CAUTION

Abrasive removal of material by grinding, sanding, or polishing at crack area will cause metal to be smeared in surface of crack resulting in hidden flaws. If inspection surface has been mechanically worked before inspection but after most recent aircraft flight, penetrant inspection shall not normally be done unless surface is etched to remove smeared metal. Etching shall not be done without depot engineering disposition.

1. Do Fluorescent Penetrant Inspection (NAVAIR 01-1A-16). Penetrant materials shall conform to MIL-I-25135, Revision E. Refer to specific work package for type, method, and sensitivity level. If specific work package does not exist, or materials are not specified, use type I, Method A, sensitivity level 2 or 3. Penetrant designated in latest revision to qualified products list of MIL-I-25135.

2. Apply penetrant to area to be inspected by spraying, brushing or wiping.

3. Allow penetrant to dwell for time listed below:

Part or Ambient Air Temperature	Time
Above 120°F	Do not inspect
100 -120°F	15 minutes
60 - 100°F	30 minutes

FIGURE 6. Example of a nondestructive inspection typical procedures work package - Continued.

Downloaded from http://www.everyspec.com

Part or Ambient Air Temperature	Time
40 - 60°F	60 minutes
Below 40°F	Do not inspect

1,1,1-Trichloroethane, 0-T-620TY1 12

4. Remove pentrant with non-haologenated solvent recommended by penetrant manufacturer or with solvent moistened cloth.

5. Apply Form D nonaqueous developer.

6-1. INTERPRETATION.

1. Initial interpretation shall be immediately after developer has dried. Allow developer to dwell for minimum of 5 minutes but not more than 30 minutes before making final interpretation.

2. Interpretation shall be done with naked eye unless specific procedure work package instructs use of magnification.

3. Mark all linear indications detected. Linear indications are defined as those having length: width ratio greater than or equal to 3:1. Rounded indications shall not be cause for evaluation unless stated in specific procedure work package or unless rounded indications form line that could indicate partially closed crack.

7-1. ACCEPTANCE LIMITS.

1. Evaluation of all indications shall be done using acceptance limits for inspection area listed in specific procedure work package. If this information is not included in specific procedure work package, refer to structural repair manual (A1-F18AC-SRM-210 through A1-F18AC-SRM-240 or A1-F18AE-SRM-600 through A1-F18AE-SRM-750) damage limits for specific inspection area.

FIGURE 6. Example of a nondestructive inspection typical procedures work package - Continued.

Downloaded from http://www.everyspec.com

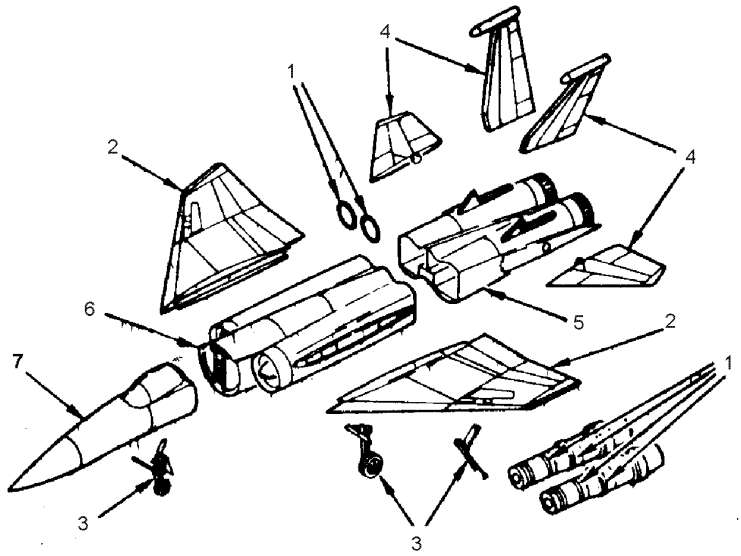

ITEM	NOMENCLATURE	WP NUMBER
1	Engine Supports	009 00
2	Wing Assembly	007 00
3	Undercarriage	010 00
4	Empennage Assembly	008 00
5	Aft Fuselage Assembly	006 00
6	Center Fuselage Assembly	005 00
7	Forward Fuselage Assembly	004 00

FIGURE 7. Example of an NDI inspection index.

Downloaded from http://www.everyspec.com

INDEX NO.	PART NUMBER	DESCRIPTION 1 2 3 4 5 6 7	MAT	STOCK SIZE	UNITS PER ASSY	USE ON CODE	SM & R CODE
	75A320946-1003	SUPPORT ASSY - NLG DOOR, FR 8 TO FR 11, OUTBD LH (76301) (NHA, WP020 00, FIG 2)			REF	A	ADDOD
	75A320946-1005	SEE ABOVE LH……			REF	B	ADDOD
	75A320946-1004	SEE ABOVE RH……			REF	A	ADDOD
	75A320946-1006	SEE ABOVE RH……			REF	B	ADDOD
1	75A320946-2021	. STIFFENER LH (76301)……			1		XBDZZ
	75A320946-2022	. SEE ABOVE RH…….			1		XBDZZ
2	75A320946-2031	. SUPPORT (76301)…….			1		PADZZ
	NAS77A3-05	. BUSHING (USE WITH INDEX 2)….			1		PAOZZ
3	75A320946-2035	. SUPPORT (76301)…….			1		XBDZZ
4	75A320946-2037	. SUPPORT LH (76301)……..			1	A	XBDZZ
	75A320946-2057	. SEE ABOVE LH…….			1	B	XBDZZ
	75A320946-2038	. SEE ABOVE RH…….			1	A	XBDZZ
	75A320946-2058	. SEE ABOVE RH…….			1	B	XBDZZ
5	75A320946-2039	. SPLICE ANGLE RH (76301)……			1	A	XBDZZ
	75A320946-2054	. SEE ABOVE……			1	B	XBDZZ
6	75A320946-2041	. SPACER (76301)……			1		PAOZZ
7	75A320946-2043	. SPLICE ANGLE LH (76301)……			1	A	XBDZZ
	75A320946-2053	. SEE ABOVE……			1	B	XBDZZ
8	75A320946-2045	. STRAP LH (76301)……			1		XBDZZ
	75A320946-2046	. SEE ABOVE RH…….			1		XBDZZ
9	75A320946-2047	. SHIM (76301)……..	AF	13	1		MGOZZ
10	75A321063-2001	. SUPPORT - AFT HINGE LH (76301)			1		PBOZZ
	75A321063-2002	. SEE ABOVE RH…….			1		PBOZZ
11	75A321070-2001	. SUPPORT - STRINGER O, FR 11… LH (76301)			1		XBDZZ
	75A321070-2002	. SEE ABOVE RH……..			1		XBDZZ
12	9M670C1	. BRACKET (76301)…….			2		PAOZZ
13	9M735-2	. BRACKET, ANGLE (76301)…….			2		PAOZZ
14	MS21062L3	. PLATENUT……..			1		PAOZZ
15	NAS673V4	. BOLT…….			1		PAOZZ
	AN960JD10LL	. WASHER (UNDER HEAD) (USE…. WITH INDEX 15)			1		PAOZZ
	AN960JD10	. WASHER (UNDER NUT) (USE…… WITH INDEX 15)			1		PAOZZ
	NAS1291C3M	. NUT (USE WITH INDEX 15)…….			1		PAOZZ
16	NAS673V5	. BOLT…….			3		PAOZZ
	AN960JD10LL	. WASHER (UNDER HEAD) (USE…. WITH INDEX 16)			3		PAOZZ
	AN960JD10	. WASHER (UNDER NUT) (USE…… WITH INDEX 16)			3		PAOZZ
	NAS1291C3M	. NUT (USE WITH INDEX 16)…….			3		PAOZZ

CODE	USABLE ON	MODEL
A	162747 THRU 164113	TAV-8B
B	164114 AND UP	TAV-8B

FIGURE 8. Example of a structural repair GAPL.

Downloaded from http://www.everyspec.com

CONCLUDING MATERIAL

Custodian:
Navy - AS

Preparing activity:
Navy - AS
(Project TMSS-2014-019)

NOTE: The activity listed above was interested in this document as of the date of this document. Since organizations and responsibilities can change, you should verify the currency of the information above using the ASSIST Online database at https://assist.dla.mil.