Downloaded from http://www.everyspec.com

NOT MEASUREMENT SENSITIVE

MIL-STD-3001-3A(AS)
w/CHANGE 1
01 December 2016
SUPERSEDING
MIL-STD-3001-3A(AS)
10 October 2014

DEPARTMENT OF DEFENSE STANDARD PRACTICE

DIGITAL TECHNICAL INFORMATION FOR MULTI-OUTPUT PRESENTATION OF TECHNICAL MANUALS

TESTING AND TROUBLESHOOTING PROCEDURES

(PART 3 OF 8 PARTS)

AMSC N/A AREA TMSS

DISTRIBUTION STATEMENT A. Approved for public release; distribution is unlimited.

Downloaded from http://www.everyspec.com

FOREWORD

1. This standard is approved for use by the Department of the Navy and is available for use by all Departments and Agencies of the Department of Defense.

2. This eight-part standard establishes the requirements needed to prepare digital technical information for multi-output presentation of NAVAIR work package (WP) Technical Manuals (TMs). The technical content and mandatory style and format requirements contained in this eight-part standard can be used to develop and assemble complete TMs for aircraft weapon systems, aeronautical equipment, airborne weapons/equipment, training systems, and support equipment WP TMs. The requirements are applicable for the output of printed paper and PDF screen displayed TMs. The requirements are also applicable for the display of Interactive Electronic Technical Manuals (IETMs) on any viewer that supports MIL-STD-3001-1.

3. MIL-STD-3001-3 is Part 3 of eight parts and is incomplete without Parts 1, 2, and Parts 4 through 8. Part 3 establishes the technical content requirements for the preparation of testing and troubleshooting procedures for aircraft weapon systems, aeronautical equipment, airborne weapons/equipment, training systems, and support equipment. This data can be used to develop TMs in a variety of output forms, including interactive screen presentations and page-based printed and PDF screen displayed TMs.

4. MIL-STD-3001-1 contains general preparation requirements for the multi-output presentation of NAVAIR WP TMs. MIL-STD-3001-2 through MIL-STD-3001-8 contain specific functional technical content requirements for the preparation of all NAVAIR WP TMs and revisions. Parts 1 through 8 are identified below.

MIL-STD-3001-1	Preparation of Digital Technical Information for Multi-output Presentation of Technical Manuals.
MIL-STD-3001-2	Description, Principles of Operation, and Operation Data.
MIL-STD-3001-3	Testing and Troubleshooting Procedures.
MIL-STD-3001-4	Maintenance Information with Illustrated Parts Breakdown (IPB).
MIL-STD-3001-5	Aircraft Wiring Information.
MIL-STD-3001-6	Structural Repair Information.
MIL-STD-3001-7	Periodic Maintenance Requirements.
MIL-STD-3001-8	Separate Illustrated Parts Breakdown (IPB).

5. Comments, suggestions, or questions on this document should be addressed to the Naval Air Systems Command (Commander, Naval Air Warfare Center Aircraft Division Lakehurst, Code 4.1.2.2, Route 547, Mail Stop 120-3, Joint Base MDL, NJ 08733-5100) or emailed to michael.sikora@navy.mil. Since contact information can change, you may want to verify the currency of this address information using the ASSIST online database at https://assist.dla.mil.

Downloaded from http://www.everyspec.com

SUMMARY OF CHANGE 1 MODIFICATIONS

1. Added requirements for Training Systems. Document Type Definition (DTD) tags were updated. Replaced figures to reflect current requirements and format. Editorial and format changes were made to text.

2. The following modifications to MIL-STD-3001-3A have been made:

Part/Paragraph	**Modification**
3-Foreword	Added
3-1.1	Added
3-4.1	Added
3-4.5.2	Changed
3-4.7	Changed
3-5.1	Added
3-5.1.3	Added
3-5.2	Added
3-5.3.2.1c(1)	Changed
3-5.3.2.1c(2)	Changed
3-5.3.3b	Added
3-5.3.4.2c	Added
3-5.3.4.6.3d	Changed
3-5.3.4.6.4	Added
3-5.3.4.6.4d	Added
3-5.3.4.6.5d	Changed
3-5.3.4.6.5d(1)	Changed
3-5.3.5	Added
3-Figure 1 sheet 1	Changed
3-Figure 1 sheet 2	Changed
3-Figure 1 sheet 3	Changed
3-Figure 2 sheet 1	Changed
3-Figure 2 sheet 2	Changed
3-Figure 2 sheet 3	Changed
3-Figure 2 sheet 4	Changed
3-Figure 3	Changed
3-Figure 4 sheet 1	Changed
3-Figure 4 sheet 2	Changed
3-Figure 4 sheet 3	Changed
3-Figure 5 sheet 1	Changed
3-Figure 5 sheet 2	Changed

Downloaded from http://www.everyspec.com

Part/Paragraph	**Modification**
3-Figure 6 sheet 1	Changed
3-Figure 6 sheet 2	Changed
3-Figure 6 sheet 3	Changed
3-Figure 7	Changed
3-Figure 9 sheet 1	Changed
3-Figure 9 sheet 2	Changed
3-Figure 9 sheet 3	Changed
3-Figure 9 sheet 4	Changed

Downloaded from http://www.everyspec.com

CONTENTS

PARAGRAPH PAGE

1. **SCOPE** **1**
1.1 Scope 1
2. **APPLICABLE DOCUMENTS** **1**
3. **DEFINITIONS** **1**
4. **GENERAL REQUIREMENTS** **1**
4.1 General 1
4.2 Maintenance level applicability 1
4.3 Selective application and tailoring 1
4.4 Preparation of digital data for electronic delivery 1
4.4.1 Use of the DTDs 1
4.5 Technical content 1
4.5.1 Types of work packages 2
4.5.2 Style and format requirements. 2
4.6 Standard tables and lists 2
4.7 Electrostatic discharge (ESD) sensitive equipment 2
4.8 Nuclear hardness 2
4.9 Ozone depleting substances (ODS) 3
4.10 Special processes 3
5. **DETAILED REQUIREMENTS** **3**
5.1 Testing and troubleshooting 3
5.1.1 Methods of testing and troubleshooting 3
5.1.1.1 Manual (non-automatic) troubleshooting 3
5.1.1.2 Semi-automatic or automatic testing and troubleshooting 3
5.1.1.3 Testing and troubleshooting using built-in-test equipment 3
5.1.2 Aircraft and aircraft system operational checkout and troubleshooting 4
5.1.2.1 Fault reporting/fault isolation information 4
5.1.2.2 Integrated system operational checkout and troubleshooting 4
5.1.2.2.1 Integrated systems having self-test or built-in-test capability 4
5.1.2.2.2 Integrated systems requiring the use of system peculiar test sets 4
5.1.2.2.3 Integrated systems requiring the use of common test equipment 4
5.1.3 Aeronautical equipment, airborne weapons/equipment, training systems, or support equipment testing and troubleshooting 5
5.1.4 Engine testing and troubleshooting 5
5.2 Preparation of testing and troubleshooting procedures 5
5.3 Work package content 6
5.3.1 Title block **<titleblk>** 6
5.3.2 Work package information **<wpinfo>** 6
5.3.2.1 Reference material list **<reflist>** 6

Downloaded from http://www.everyspec.com

CONTENTS

PARAGRAPH PAGE

5.3.2.2 Record of Applicable Technical Directives **<ratd>** 7
5.3.2.3 Support equipment required list **<selist>** 8
5.3.2.4 Facilities required list **<faclist>** 8
5.3.2.5 Materials required list **<matlist>** 8
5.3.3 Required operational checkout, testing and troubleshooting information 9
5.3.4 Aircraft and aircraft systems testing and troubleshooting work packages..... 9
5.3.4.1 Maintenance code listing work package **<maintcdwp> (fault reporting manual only)**. 9
5.3.4.2 Fault indications work package **<fltindwp> (fault reporting manual only)** 9
5.3.4.3 Fault descriptor work package **<fltdescrptwp> (fault reporting manual only)**.... 10
5.3.4.4 Symbology work packages **<symwp> (fault reporting manual only)**..... 10
5.3.4.5 Fault isolation troubleshooting procedure work packages **<fitrblwp> (fault isolation manual only)**..... 10
5.3.4.5.1 Troubleshooting procedure development for fault isolation troubleshooting procedures work packages 11
5.3.4.6 Operational checkout and troubleshooting procedures work packages 11
5.3.4.6.1 Operational checkout and troubleshooting procedures content 12
5.3.4.6.2 Operational checkout and troubleshooting procedure work package development 12
5.3.4.6.3 Operational checkout work package **<opchkwp>** 12
5.3.4.6.4 5.3.4.6.4 Troubleshooting work package **<trblshtwp>**..... 13
5.3.4.6.5 Combined operational checkout and troubleshooting work package **<tst-trblwp>**..... 14
5.3.4.7 Functional flow diagram work packages **<ffdiagwp>** 15
5.3.4.7.1 Functional flow diagram technical content requirements 15
5.3.5 Aeronautical equipment, airborne weapons/equipment, training systems, and support equipment testing and troubleshooting work packages 16
5.3.6 Engine testing and troubleshooting work packages **(intermediate and depot maintenance only)** 16
5.3.6.1 Engine testing procedures work package **<engtestwp>** 16
5.3.6.2 Engine troubleshooting work package **<trblshtwp>**..... 19

6. **NOTES** **20**

Downloaded from http://www.everyspec.com

CONTENTS

FIGURES PAGE

FIGURE 1. Example of a maintenance code listing work package. 21
FIGURE 2. Example of a fault indications work package. 24
FIGURE 3. Example of a fault descriptor work package. 28
FIGURE 4. Example of a symbology work package. 29
FIGURE 5. Example of a fault isolation troubleshooting procedures work package. 32
FIGURE 6. Example of an operational checkout work package. 34
FIGURE 7. Example of a troubleshooting procedures text-logic format (Method A). 37
FIGURE 8. Example of a troubleshooting procedures tabular format (Method B). 38
FIGURE 9. Example of a combined operational checkout and troubleshooting procedures logic flow diagram format work package. 39

Downloaded from http://www.everyspec.com

1. SCOPE

1.1 Scope. This part of the standard establishes the technical content requirements for the preparation of testing and troubleshooting procedures for aircraft weapon systems, aeronautical equipment, airborne weapons/equipment, training systems, and support equipment. This data can be used to develop TMs in a variety of output forms, including interactive screen presentations and page-based printed and screen displayed PDF TMs.

2. APPLICABLE DOCUMENTS

The applicable documents in section 2 of MIL-STD-3001-1 apply to this Part.

3. DEFINITIONS

The definitions in section 3 of MIL-STD-3001-1 apply to this Part.

4. GENERAL REQUIREMENTS

4.1 General. Sufficient testing and troubleshooting procedures shall be developed for the aircraft weapon system, aeronautical equipment, airborne weapons/equipment, training systems, or support equipment so that maintenance personnel can perform all authorized operator through depot level testing and troubleshooting. This information shall be contained in Testing and Troubleshooting Information Modules that are subdivided into WPs.

4.2 Maintenance level applicability. Requirements contained in this Part are applicable to all types and maintenance levels of TMs unless specifically noted in bold and in parentheses (i.e., **Support Equipment Manuals only**, **Depot Level only**, etc.).

4.3 Selective application and tailoring. This Part contains some requirements that may not be applicable to the preparation of all TMs. Selective application and tailoring of requirements contained in this Part shall be accomplished through the use of the Technical Manual Content Selection Matrixes contained in MIL-STD-3001-1, Appendix A. The applicability of some requirements is also designated by one of the following statements: unless specified otherwise by the requiring activity or as/when specified by the requiring activity.

4.4 Preparation of digital data for electronic delivery. TM data prepared and delivered digitally in accordance with this Part of the standard shall be XML-tagged and assembled using the modular Document Type Definition (DTD). Refer to MIL-STD-3001-1 for information on obtaining or accessing this modular DTD. XML tags used in the modular DTD are noted throughout the text of this standard in bracketed, bold characters (i.e., **<testrblim>)** as a convenience for the TM author and to denote the appropriate tag to be used for this specific information when developing a document instance.

4.4.1 Use of the DTDs. The modular DTDs referenced in this Part interpret the technical content and structure for the functional requirements contained in this Part and are mandatory for use.

4.5 Technical content. Technical content requirements contained in this Part are mandatory and are intended for compliance. The content structure for the technical data being developed shall

Downloaded from http://www.everyspec.com

conform to the associated modular Document Type Definition (DTD) for Testing and Troubleshooting.

4.5.1 Types of work packages. There are basically two types of WPs. The first type is an information-oriented WP. It provides information such as general information about the printed TM or the IETM and specific information about the weapon system/equipment, such as principles of operation and operating instructions. The second type of WP is task-oriented. Task-oriented WPs reflect all required maintenance tasks, including testing and troubleshooting, at the assigned level of maintenance. Task-oriented WPs also contain supporting information such as required materials and support equipment required for each defined task. WPs are written to reflect the engineering design, Logistics Support Analysis (LSA) or Logistics Management Information (LMI), Level of Repair Analysis (LORA), approved maintenance plan, and the established repair concept (i.e., Source, Maintenance, and Recoverability (SM&R) Codes).

4.5.2 Style and format requirements. For mandatory style and format requirements for WP TMs intended for a printed, page-oriented presentation, refer to MIL-STD-3001-1, Appendix B. For style and format requirements for the on-screen display of IETMs, refer to NAVAIRINST 4120.11 and Appendix C.

4.6 Standard tables and lists. Standard tables and lists are noted throughout the text of this standard in bold and in parentheses (i.e., (**standard table**), (**standard list**)). The structure and titles of the column headings for these standard tables and lists shall have no deviations.

4.7 Electrostatic discharge (ESD) sensitive equipment. If the electronic equipment to be handled, inspected, repaired, or assembled is ESD sensitive, the symbol [ESD] shall be incorporated into the applicable tasks and procedures of the technical publications to ensure that ESD sensitive parts are not degraded during handling or operation. The symbol [ESD] shall precede the procedure title. The specific step(s) in the procedure addressing handling or operation which could damage ESD sensitive parts shall be labeled by placing the symbol [ESD] between the step number and the text.

4.8 Nuclear hardness. If the weapon system/equipment to be operated, maintained or overhauled has nuclear survivability requirements (for example, overpressure and burst, thermal radiation, electromagnetic pulse (EMP), or transient radiation effects on electronics (TREE)), applicable warnings and Hardness-Critical Processes (HCP) symbols shall be incorporated into the applicable tasks and procedures of the technical publications to ensure the hardness of the equipment is not degraded during handling or operation. Caution shall be taken not to include classified information in an unclassified publication. When entire paragraphs, including subparagraphs, contain hardness critical information, only major paragraphs shall be marked. The appropriate symbol [HCP], [HCI], [OCP], [OCI], [CSP], or [CSI] shall be placed between the paragraph number and title. When only certain processes/steps within a paragraph contain hardness critical information, only the applicable process/step shall be marked. The symbol [HCP], [HCI], [OCP], [OCI], [CSP], or [CSI] shall be placed between the step number and text. For definitions of the acronyms contained in this paragraph, refer to section 3 of MIL-STD-3001-1.

Downloaded from http://www.everyspec.com

4.9 Ozone depleting substances (ODS). The continued use of ODS has been prohibited by Executive Order 12856. The use of ODS materials in NAVAIR manuals is prohibited. A listing of these substances will be provided by the requiring activity.

4.10 Special processes. Information shall be included for any special process required under extreme environmental or operational conditions within the limits of the equipment.

5. DETAILED REQUIREMENTS

5.1 Testing and troubleshooting. Testing and troubleshooting data shall be developed to the extent required to maintain the aircraft weapon system, aircraft engines, aeronautical equipment, airborne weapons/equipment, training systems, or support equipment at the authorized maintenance level. Troubleshooting information shall be provided in combination with test procedures. This testing and troubleshooting information shall guide the technician, in as practical a manner as possible, to the system, subsystem, weapons replaceable assembly (WRA), shop replaceable assembly (SRA) or further to the replaceable part, interconnecting wire, or mechanical linkage which caused the malfunction or failure. All information required to perform the tests and evaluate probable malfunctions of the assembled systems or equipment shall be provided.

5.1.1 Methods of testing and troubleshooting. The number of interrelated systems, assemblies, subassemblies, and components; types of equipment; and maintenance plan shall be taken into consideration as to the type and depth of testing and troubleshooting instructions to be developed. Based on the complexity of the system or equipment, manual (non-automatic), semi-automatic or automatic testing and troubleshooting methods shall be used. Functional testing is usually performed using a test set or test console whereby technicians make end-to-end checks of the system or equipment to ensure it will perform the function it was intended to do.

5.1.1.1 Manual (non-automatic) troubleshooting. Troubleshooting procedures using non-automatic test equipment shall be established on a system test concept. To meet the objectives of reduced maintenance downtime and decreased fault detection time, malfunction symptoms shall be identified to specific points of entry into the testing/troubleshooting cycle. Every effort shall be employed to avoid repetition of the time consuming end-to-end test.

5.1.1.2 Semi-automatic or automatic testing and troubleshooting. Many high performance systems have been designed to accept the use of semi-automatic/automatic test equipment. These systems are designed and programmed for rapid electronic test in the interest of reducing maintenance downtime to fault isolate and repair.

5.1.1.3 Testing and troubleshooting using built-in-test equipment. Built-in-test capabilities are designed to operate in various formats. One of these formats is built-in-test using preprogrammed magnetic test tapes or diagnostic software; another is the incorporation of electronically controlled sensors within the systems to be tested. Testing procedures shall identify the specific part number tape or the software required for test performance. Sensors, installed at critical points in aircraft systems, are used to detect discrepancies in system operation during flight. Readout capability varies from magnetic tape in-flight monitors to digital display maintenance monitoring panels. Special documentation has been designed to properly interpret these displays and isolate and correct malfunctions.

Downloaded from http://www.everyspec.com

5.1.2 Aircraft and aircraft system operational checkout and troubleshooting. Operational checkout (testing) and troubleshooting includes fault reporting/fault isolation data for the overall aircraft weapon system and detailed checkout and troubleshooting procedures. These procedures shall include all information and instructions required to perform ground tests (system/subsystem checkout), evaluate test indications, and troubleshoot malfunctions or failures of aircraft systems/ subsystems, interconnecting wiring, and components.

5.1.2.1 Fault reporting/fault isolation information. Fault reporting information provides flight crews and ground operating personnel with a standardized means for reporting and interpreting aircraft malfunctions and fault symptoms. Fault isolation information is designed for use in rapid isolation of faults revealed during flight or while the airplane is in an operational configuration on the ground (i.e., just prior to launch or just after landing). This data shall instruct maintenance personnel as to what maintenance actions to perform and/or what procedures to use to correct reported faults. Fault reporting information and the fault isolation data are designed to be used together. Fault isolation information coverage shall be limited to faults identified in the fault reporting data which require specific procedures to isolate the cause. Fault reporting data shall reference the fault isolation data to the maximum extent practical for isolation of indicated malfunctions.

5.1.2.2 Integrated system operational checkout and troubleshooting. When several systems are dependent upon each other for proper operation, the interdependent systems, as a unit, are identified as an integrated system. The operational test of an integrated system is an operational checkout of the interdependent systems, less non-associated systems, and shall reflect the assumption that the technician performing the check is qualified on the aircraft and is familiar with its systems and subsystems. Integrated system troubleshooting procedures shall be presented in two levels: first, the integrated system as a unit; and second, the systems that make up the integrated system. Development and content of operational checkout and troubleshooting for integrated systems shall be determined based on the systems having self-test or built-in-test capabilities or requiring the use of a system peculiar test set or common test equipment. An integrated system may involve the need to use all three types of test capabilities. These compound applications require more specifics on the criteria of which components or signals are tested by which method. In addition to coverage of the integrated system, the associated systems making up the integrated system shall be covered separately and individually.

5.1.2.2.1 Integrated systems having self-test or built-in-test capability. Operational checkout and troubleshooting procedures shall include what components or functions are tested, and what inputs are required for proper testing (power parameters, signals, motion, air, hydraulic, etc.). If wiring tests are included, they shall have defined testing parameters (which wires are tested, resistance tolerances, open definitions, wire-to-wire and wire-to-ground resistances, and any peculiar wire criteria) and what fault verification is required for a failure indication.

5.1.2.2.2 Integrated systems requiring the use of system peculiar test sets. Operational checkout and troubleshooting procedures shall include identical parameters as those in 5.1.2.2.1 with the additional requirement for special cables or support equipment that may be required.

5.1.2.2.3 Integrated systems requiring the use of common test equipment. Operational checkout and troubleshooting procedures shall focus on the readings or signal requirements so the sources of common test equipment that have these capabilities will not be restricted.

Downloaded from http://www.everyspec.com

5.1.3 Aeronautical equipment, airborne weapons/equipment, training systems, or support equipment testing and troubleshooting. Testing includes procedures that subject the equipment and its systems, subsystems, components, and accessories to prescribed conditions to determine that it will function in accordance with predetermined test parameters. Troubleshooting includes procedures for detecting, isolating, and correcting aeronautical equipment, airborne weapons/ equipment, training systems, and support equipment failures and malfunctions. Testing and troubleshooting can be accomplished using either manual test or automatic (using ATE) test procedures.

5.1.4 Engine testing and troubleshooting. Testing and troubleshooting data shall determine, isolate, and remedy performance difficulties on the engine and engine systems and accessories. Testing and troubleshooting data shall also locate and identify malfunctions caused through interaction of integrated systems.

5.2 Preparation of testing and troubleshooting procedures. Testing and troubleshooting procedures shall be developed and contained in Testing and Troubleshooting Information Modules **<testrblim>**. These information modules shall be logically subdivided into task-oriented WPs to enable a technician to receive, process, test, troubleshoot, and maintain the aircraft weapon system, aeronautical equipment, airborne weapons/equipment, training systems, and support equipment to the lowest level replaceable component or part in accordance with the established maintenance concept. Procedures shall be based on the following assumptions:

a. Operational checkout, testing, and troubleshooting procedures shall include all elements of pre-test setup and post-test shutdown.

b. Successful completion of an operational checkout or testing procedure verifies system/ equipment operation. Procedures shall concentrate on fault isolation and the identification of failures and malfunctions.

c. Procedures will normally trace one malfunction at a time. However, possible multiple failures must be anticipated and considered in the testing processes.

d. If several components are suspected, the one most likely to have failed shall be considered first.

e. If a test result is not obtained, the malfunction symptom shall be keyed to the appropriate part of the troubleshooting procedure. However, if there is only one remedy for a specific malfunction, the remedy may appear following the appropriate checkout or test procedural step.

f. Whenever a component is replaced, testing shall be restarted to ensure that the replacement did not introduce a new fault into the system. This assumption shall not be interpreted as a requirement to repeat an entire system checkout in all cases.

g. Adjustment/alignment procedures shall be integrated into the testing (checkout) or troubleshooting (fault isolation) procedures at the point of observation, if possible. When extensive access to make the adjustment/alignment or different setup procedures is required, the procedure(s) shall be referenced to a separate adjustment/alignment procedure WP.

Downloaded from http://www.everyspec.com

5.3 Work package content. Each WP developed for operational checkout, testing, and troubleshooting procedures shall consist of the following:

a. Title block.

b. WP information.

c. Required operational checkout/testing and troubleshooting procedures.

5.3.1 Title block **<titleblk>**. For page-based TMs, refer to MIL-STD-3001-1, Appendix B, for WP title block content requirements. For **IETMs**, refer to MIL-STD-3001-1, Appendix C.

5.3.2 Work package information **<wpinfo>**. Each WP developed for testing and troubleshooting shall begin with a reference material list, a record of applicable technical directives, a support equipment required list, a facilities required list, and a materials required list, if applicable.

5.3.2.1 Reference material list **<reflist>**. Reference material required to complete a task or discussion within a WP shall be contained in a reference material list (**standard list**). If no reference material applies, the heading "Reference Material" shall be omitted from the WP. Guidelines for developing the reference material list are provided below:

a. Only those publications required for performance of the task covered by the WP shall be included in the reference material list.

b. Publications such as guides or standards which are not directly needed to accomplish the task (backup informational material or bibliography) shall not be listed in the reference material list even if cited in the WP text.

c. Each entry in the list shall consist of:

(1) A title. Referenced publications or referenced WPs within the manual by title. If the reference is to a specific WP or a subject in the referenced publication, the WP/subject title may be listed below the related referenced publication title.

(2) A number. The appropriate publication or WP number. If the reference is to a specific WP/subject in the referenced publication, the WP/subject number shall not be listed.

d. The maintenance level of publications listed is not required.

e. Referenced publications shall be presented by title in alphabetical order. The publication title, WP title, and WP number shall also be identified. When two or more WPs are referenced in the same manual, they shall be listed in numerical sequence; repetition of the manual title and publication number is not required.

f. Additional WPs within the same manual that are required to complete the task or discussion shall be presented first, in numerical sequence. The WP title and WP number shall also be identified. The publication number is not required.

Downloaded from http://www.everyspec.com

g. Referenced publications not prepared in WP format shall be presented in numerical sequence. The title and publication number shall also be included.

5.3.2.2 Record of Applicable Technical Directives **<ratd>**. Technical directives applicable to a specific WP shall be listed in a record of applicable technical directives list (**standard list**). If no technical directives apply, the heading "Record of Applicable Technical Directives" shall be omitted from the WP. The record of technical directives shall be prepared in accordance with the following guidelines:

a. All issued technical directives having any impact on the WP shall be listed upon incorporation into the WP.

b. Approved engineering change proposals (ECPs) that have no effect on retrofit of the end item shall not be listed in the record of applicable technical directives (e.g., "no technical directive will be issued").

c. All technical directives and related ECPs or Rapid Action Minor Engineering Changes (RAMECs) shall be listed upon incorporation into the WP.

(1) "TD Type/No." - Enter the type and number of the technical directive, e.g., "F/A-18 AFC 126" or "AVC 102."/

NOTE

The "TD Type/No." is identified on the Change Control Board (CCB) formal letter of ECP or RAMEC approval. Refer to NAVAIR 00-25-300.

(2) "TD Date" - Enter the date of issue of the technical directive. If the number of the technical directive has been assigned but the directive has not been issued, a dash (-) shall be entered.

(3) "Title and ECP/RAMEC No." - The title of the technical directive and the ECP number or RAMEC, if applicable, shall be listed. If a technical directive listed is the direct result of an approved ECP or RAMEC, the acronym ECP or RAMEC and number shall be shown in parentheses following the technical directive title.

(4) "Date Inc." - The date the information affected by the technical directive or the ECP was incorporated into the WP.

(a) If the technical directive number has been assigned and the directive has not yet been issued (retrofit program), but the ECP that incorporates the change in the production program has been approved, the production ECP coverage shall be included, and the notation "Production coverage only" shall be entered under "Remarks."

(b) When the retrofit TD is approved and incorporated in a change or revision following the incorporation of the production ECP coverage, the TD date of issue shall be entered under "TD Date," the notation "Production coverage only" shall be removed from under "Remarks," and the date of retrofit coverage incorporation shall be listed under “Date Inc." (in lieu of the production ECP coverage incorporation date).

Downloaded from http://www.everyspec.com

(5) "Remarks" - Enter any applicable remarks.

5.3.2.3 Support equipment required list **<selist>**. All support equipment (SE), including special tools required to perform operational type procedures, shall be listed (**standard list**) immediately following the record of applicable technical directive data. If no support equipment is required, the heading "Support Equipment Required" shall be omitted from the WP. Only those special tools (including torque wrenches) and equipment authorized for use at the level of maintenance covered shall be listed. Items shall be listed in alphabetical sequence by noun nomenclature. Standard hand tools shall not be listed. Illustrations shall not be prepared in support of such lists. When the manual is used by other services or commands that require usage restrictions, the item shall be identified by a symbol following the part number in parentheses. The usage of the symbol shall be explained in a notation (e.g., "(AF) = USAF only," "(NS) = NAVSEA only," "(MC) = MARINE CORPS only").

5.3.2.3.1 Each support equipment entry in the list shall be identified by "Nomenclature," "Part Number," and "CAGE Code." When more than one of the same item is required, the quantity shall follow the nomenclature in parentheses. If a “CAGE Code” is not available, a dash shall be substituted for the “CAGE Code”.

5.3.2.3.2 If the WP contains multilevel maintenance procedures and any of the support equipment items are authorized for use at only certain level(s), the restrictive use shall be indicated by the use of an O, I, and/or D in parentheses following the item nomenclature. For **Aircraft Engine Manuals,** the following special application codes to identify usage restrictions shall be used:

a. "J" shall be used to indicate the first degree engine maintenance level,

b. "8" shall be used to indicate the second degree engine maintenance level, and

c. "9" shall be used to indicate the third degree engine maintenance.

5.3.2.4 Facilities required list **<faclist>**. All facilities needed to accomplish the maintenance procedures shall be listed **(standard list)** immediately following the support equipment required list. If no facilities are required, the heading "Facilities Required" shall be omitted from the WP. Each facilities entry in the list shall be identified by "Nomenclature," "Part Number," and "CAGE Code."

5.3.2.5 Materials required list **<matlist>**. All materials (consumable materials and/or expendable items) required to perform maintenance type procedures shall be listed (**standard list**). If no materials apply, the heading "Materials Required" shall be omitted from the WP. Items shall be listed in alphabetical sequence by noun nomenclature. The materials required list shall be prepared in accordance with the following guidelines:

a. Each material entry in the list shall be identified by "Nomenclature," "Specification/Part Number," and "HMWS Index Number," as applicable.

(1) Unless alternate identification is approved by the requiring activity, materials shall be listed by Government specification.

Downloaded from http://www.everyspec.com

(2) If the WP contains multilevel maintenance procedures and any of the materials are authorized for use at only certain level(s), the restriction shall be indicated by the use of an O, I, and/or D in parentheses following the item nomenclature.

(3) When more than one of the same item is required, the quantity shall follow the nomenclature in parentheses.

b. Parts that require mandatory replacement (e.g., preformed packing) in the procedure shall be listed.

c. An appropriate notation shall follow the item to explain each restriction and/or quantity requirement.

5.3.3 Required operational checkout, testing and troubleshooting information. Operational checkout, testing and troubleshooting information shall be developed and divided into the following types of WPs:

a. Aircraft and aircraft systems testing and troubleshooting WPs.

b. Aeronautical equipment, airborne weapons/equipment, training systems, or support equipment testing and troubleshooting WPs.

c. Engine testing and troubleshooting WPs.

5.3.4 Aircraft and aircraft systems testing and troubleshooting work packages. The technical content requirements for all aircraft and aircraft systems WPs are provided in 5.3.4.1 through 5.3.4.6.3. The style and format for these operational checkout and troubleshooting procedures will vary depending on their complexity and intended presentation.

5.3.4.1 Maintenance code listing work package **<maintcdwp> (fault reporting manual only)**. This WP shall identify and list all aircraft and aircraft systems built-in-test (BIT) maintenance codes **<maintcd>**. An introduction **<intro>** explaining the maintenance codes and any other general information about the code listings and how they correspond to aircraft fault isolation data shall be included. For each code listed, the malfunction **<malfunc>**, the malfunctioning system **<malfsys>**, and maintenance action **<maintact>** shall be listed, and all possible related indications **<relind>** shall be identified (see figure 1). Maintenance action shall include procedures to verify maintenance codes and/or reported faults prior to performing corrective actions. To conform to the WP concept and task orientation, the following shall apply:

a. Faults shall be identified by codes which will assist maintenance personnel in recognition, interpretation, and diagnosis of detected system discrepancies.

b. Fault codes shall be grouped numerically to respond to fault indications within a given system or related integrated systems.

5.3.4.2 Fault indications work package **<fltindwp> (fault reporting manual only)**. This WP shall include warning, caution, advisory, fault indications, and voice alert messages, as applicable. A list of failure indications and a description of the logic which causes the failure indication shall also be included (see figure 2). An introduction **<intro>** explaining the various types of fault indication data and how this data is used in fault reporting and fault isolation shall

Downloaded from http://www.everyspec.com

also be included. The data shall be divided into the following detailed fault categories, as required:

a. Listings of all alert messages. A voice alert table **<valrttable> (standard table)** listing of all applicable voice alert messages **<valrtmess>** and a description **<desc>** of their meaning shall be included.

b. Listings of all indicator panel indications. A table **<pnlindtable> (standard table)** listing of all applicable indicator panel indications **<indpnlind>** and a description **<desc>** of their meaning shall be included. An illustration shall be prepared depicting the panel indications listed. In addition, each panel indication may be assigned an index number **<indexno>** to facilitate location on the corresponding illustration.

c. Listings of all indicator panel indications with reference codes. A table **<indfltable>** (**standard table**) listing of all applicable indicator panel indications shall be provided. Each panel indication **<indication>** shall include a reference code **<refcode>**. A description **<desc>** of the meaning of each panel indication listed shall also be included. An illustration shall be prepared depicting the panel indications listed. In addition, each panel indication may be assigned an index number **<indexno>** to facilitate location on the corresponding illustration.

d. Listings of all fault indicators. A table **<wraflttable> (standard table)** listing all applicable WRA fault indicators shall be included. An illustration shall be prepared depicting the location of the WRA fault indicators listed. The table shall list all fault indicators **<wrafltind>** and a description of each under a malfunction heading. For each fault indicator listed, a maintenance action **<maintact>** shall be included. When applicable, a related maintenance code **<maintcd>** shall be provided. In addition, each panel having a WRA fault indicator shall be assigned an index number **<indexno>** to facilitate location on the corresponding illustration.

5.3.4.3 Fault descriptor work package **<fltdescrptwp> (fault reporting manual only)**. This WP shall contain a description of reported malfunctions and related maintenance codes for each aircraft system (see figure 3). An introduction **<intro>** explaining the fault descriptor data and how this data is used as an aid in relating reported malfunctions to maintenance codes shall be included. For each aircraft system, a table **<fltdesctable>** (**standard table**) listing all fault descriptions **<fltdescript>** along with the corresponding maintenance action **<maintact>** to be taken shall be developed.

5.3.4.4 Symbology work packages **<symwp> (fault reporting manual only)**. A series of WPs shall be developed containing illustrations and descriptions of all aircraft display elements (e.g., HUD displays, radar display, etc.) (see figure 4). An introduction **<intro>** explaining the use of these illustrations and descriptions shall also be included. A table **<symtable>** (**standard table**) shall list each different display element **<display>** and provide a corresponding description **<desc>**. In addition, each display element shall be assigned an index number **<indexno>** to facilitate location on the corresponding illustration.

5.3.4.5 Fault isolation troubleshooting procedure work packages **<fitrblwp> (fault isolation manual only)**. A series of WPs shall be developed containing information and instructions required to troubleshoot aircraft system/subsystem malfunctions or failures identified only in the fault reporting TM WPs. Troubleshooting procedures shall be developed for each malfunction

Downloaded from http://www.everyspec.com

code or other fault symptoms identified in the fault reporting WPs. Procedures necessary to isolate faults to a defective weapons replaceable assembly (WRA), aircraft wiring, mechanical linkage, or an out-of-adjustment/alignment condition shall be included. Procedures shall be based on the assumption that only one malfunction exists at a time. In addition, a note shall be included within the procedures explaining that the associated schematic and component locator may be used as an aid while doing this procedure. A reference to their location shall be included. When the system schematics do not adequately support the fault isolation troubleshooting procedures, unique schematics shall be prepared and included in the WP.

5.3.4.5.1 Troubleshooting procedure development for fault isolation troubleshooting procedures work packages. Troubleshooting procedures **<trblproc-a>** for specific fault symptoms **<symptom>** shall combine text and logic and consist of a series of numbered steps and substeps **<step>** which lead to an indication **<condition>** or condition **<condition>** (usually stated in the form of a question). Based on these indications or conditions, a "YES" or "NO" response **<decision>** is provided that will guide the technician to the next step or a series of steps, leading to a corrective action (see figure 5). This process is continued until the complete troubleshooting procedure is completed. The corrective action may include a reference **<reference>** to the applicable TM and WP containing the procedures to correct the discrepancy. The following factors shall also be considered:

a. The recommended maintenance action shall be specific to the reported malfunction(s) and normally shall not call for further fault diagnosis to be repeated if detection was made through in-flight monitoring. However, the fault isolation WPs shall direct and define equivalent diagnostic procedures in the event fault diagnosis had not been completed in-flight.

b. The fault isolation procedures objective shall be to minimize the use of special tools and test equipment. Maximum use shall be made of on-board equipment and built-in-test features. However, if required, procedures shall be prepared to permit the use of authorized test equipment to improve or reduce fault detection time. Extensive use of additional testing equipment shall result in reference to the system test and troubleshooting manual.

5.3.4.6 Operational checkout and troubleshooting procedures work packages. A series of WPs shall be developed containing operational checkout and troubleshooting procedures for integrated aircraft systems and for each independent aircraft system and aircraft subsystem, as applicable. The content and development requirements for these WPs are provided in 5.3.4.6.1 through 5.3.4.6 5. Special attention shall be given to aircraft interface wiring fault isolation procedures. Wiring fault isolation procedures shall include the following types of data, as applicable:

a. Specific wire reading access points and resistances for wiring components (where practical).

b. Wire-to-wire and wire-to-ground criteria for circuit integrity.

c. Special wire definition where required (including interconnecting criteria for proper sealing or terminal application), and special notations where wire harnesses should be completely replaced and not repaired.

Downloaded from http://www.everyspec.com

d. It is also essential when developing fault isolation procedures to provide or refer to ground stud tables which include type, location, and wires connected; charts for both connectors and terminal boards; and a wire number log to identify any wire to its prime wiring diagram.

e. Maintenance and repair criteria for the aircraft interconnecting wiring that is contained in the NAVAIR 01-1A-505 series or included in a separate aircraft wire connector repair manual shall be referenced and not duplicated in the WPs to avoid errors and redundant corrective actions.

5.3.4.6.1 Operational checkout and troubleshooting procedures content. Operational checkout and troubleshooting procedures shall guide a technician in as practical a manner as possible in detecting, isolating, and correcting system failure/malfunctions. Procedures shall ultimately lead the technician to an appropriate adjustment, replaceable parts, interface wires, or mechanical linkage, which caused the malfunction or failure. Instructions shall direct repair or replacement of parts authorized for repair or replacement at the maintenance level covered. Procedures shall be accompanied by schematics, signal flow diagrams, waveforms, tables, and other illustrations for comprehensive understanding of the procedures. When schematics are required as backup data, they shall be referenced or contained in the same WP. If a large number of schematics are required, they may be included in a separate schematic diagram WP **<schemwp>**. Schematic diagram WPs shall include an introduction **<intro>**. The schematics shall integrate fluid, mechanical, electrical, and electronic components. Illustrations may also be included that locate and identify the controls and displays used to perform the testing and troubleshooting procedures. If ATE is used and a Test Program Set has been developed, the operational checkout and troubleshooting procedures contained in the Test Program Set shall not be duplicated. A reference to the Test Program Set shall be provided.

5.3.4.6.2 Operational checkout and troubleshooting procedure work package development. Operational checkout and troubleshooting procedures may be combined into a single WP or may be developed in a separate operational checkout and a separate troubleshooting WP based on the following factors:

a. Complexity of the system/equipment.

b. The type of test equipment used.

c. System/equipment self-test or BIT capability.

d. Complexity of the test and troubleshooting procedures as determined by the task analysis.

e. Clarity and usability.

5.3.4.6.3 Operational checkout work package **<opchkwp>**. Operational checkout procedures that subject the aircraft, aircraft systems, subsystems, components, accessories, and items of equipment to prescribed conditions to determine that they will function in accordance with predetermined test parameters shall be developed. The following information shall be included in the WP, as applicable:

Downloaded from http://www.everyspec.com

a. Introduction **<intro>**. When required, an introduction shall be included explaining how the operational checkout procedures are to be used to perform testing and how they relate to the associated troubleshooting WPs.

b. General procedures and precautions **<genproc>**. Any general procedures that must be performed prior to checkout and precautions that must be taken during the performance of the checkout procedure shall be included. Adjustment procedures that must be performed prior to or during the checkout procedures shall also be included.

c. Pretest setup procedures **<pretest>**. Procedures for connecting any test and accessory equipment, including cable connections, shall be included. Procedures for the initial setting of controls shall also be provided.

d. Operational checkout procedures **<opchk>**. Operational checkout procedures **<opproc>** or **<optest>** shall consist of a series of numbered steps and substeps which lead to an indication or condition **<condition>**. Based on these indications or conditions, a corrective action **<action>** is provided (see figure 6). This corrective action can either be stated as a specific remedy or can be a reference to a detailed troubleshooting procedure WP. This process is continued until the complete operational checkout procedure is completed.

e. Post-operational shutdown procedures. Procedures to return the aircraft, aircraft system, or equipment to its normal configuration, prior to operational checkout setup, if required, shall be included. When applicable, procedures shall be included for both normal shutdown **<shutdown>** and emergency shutdown **<emergshtdn>**.

5.3.4.6.4 Troubleshooting work package **<trblshtwp>**. Troubleshooting procedures for detecting, isolating, and correcting aircraft, aircraft systems, subsystems, training systems, and equipment failures and malfunctions shall be developed. The following information shall be included in the WP, as applicable:

a. Introduction **<intro>**. When required, an introduction shall be included explaining how the troubleshooting procedures are to be used to perform troubleshooting and how they relate to the associated operational checkout WPs. When applicable, a consolidated list of malfunctions or systems that reference or link to the applicable troubleshooting procedures shall be included.

b. General procedures and precautions **<genproc>**. Any general procedures that must be performed prior to troubleshooting and precautions that must be taken during the performance of the troubleshooting procedure shall be included. Adjustment procedures that must be performed prior to or during the troubleshooting procedures shall also be included.

c. Troubleshooting procedures **<trblsht>**. Based on the complexity of the troubleshooting to be performed, troubleshooting procedures can be structured differently and, therefore, will contain different content elements. The following two methods shall be used to prepare troubleshooting procedures:

(1) Method A - Text-Logic **<trblproc-a>**. Troubleshooting procedures for specific fault symptoms **<symptom>** shall combine text and logic and consist of a series of steps and substeps **<step>** which lead to an indication or condition **<condition>** (usually stated in the form of a question). Based on these indications or conditions, a "YES" or "NO" response **<decision>** is

Downloaded from http://www.everyspec.com

provided that will guide the technician to either the next step or a series of steps **<step>**, or to a corrective action **<corr-action>**. The corrective action may consist of a malfunction **<malfunction>** or action **<action>** followed by a reference **<reference>** to the WP or paragraph that contains the data to perform the corrective action (see figure 7). This process is continued until the complete troubleshooting procedure is completed.

(2) Method B - Text **<trblproc-b>**. Troubleshooting procedures shall consist of an all inclusive series of specific fault symptoms **<symptom>** for the system/equipment being troubleshot. For each fault symptom, the probable malfunction or series of malfunctions **<malfunction>** that may have caused the fault shall be listed. For each probable malfunction identified, a corrective action **<action>** shall be stated with a reference **<reference>** to the WP or paragraph that contains the data to perform the corrective action (see figure 8).

d. Post-operational shutdown procedures. Procedures to return the aircraft, aircraft system, training systems, or equipment to its normal configuration, prior to operational checkout setup, if required, shall be included. When applicable, procedures shall be included for both normal shutdown **<shutdown>** and emergency shutdown **<emergshtdn>**.

5.3.4.6.5 Combined operational checkout and troubleshooting work package **<tst-trblwp>**. Combined operational checkout and troubleshooting procedures to verify proper operation to prescribed standards and for detecting, isolating, and correcting aircraft, aircraft systems, subsystems, and equipment failures and malfunctions shall be developed. The following information shall be included, as applicable:

a. Introduction **<intro>**. When required, an introduction shall be included explaining how the operational checkout and troubleshooting procedures are to be used, and how they relate to the associated maintenance WPs that include the corrective actions that will return the equipment to proper operation.

b. General procedures and precautions **<genproc>**. Any general procedures that must be performed prior to checkout and precautions that must be taken during the performance of the checkout procedure shall be included. Adjustment procedures that must be performed prior to or during the checkout and troubleshooting procedures shall also be included.

c. Pretest setup procedures **<pretest>**. Procedures for connecting any test and accessory equipment, including cable connections, shall be included. Procedures for the initial setting of controls shall also be provided.

d. Operational checkout and troubleshooting procedures **<opchk-trblproc>**. Operational checkout and troubleshooting procedures may be combined in a single procedure or may be prepared as a separate operational checkout procedure and a separate troubleshooting procedure.

(1) Combined operational checkout and troubleshooting procedures. Combined operational checkout and troubleshooting procedures **<opchk-trblproc>** shall consist of a series of test procedures **<testproc>** (steps and substeps) which lead to an indication **<condition>** or condition **<condition>**. When a normal indication is obtained, the operational checkout continues until the complete checkout is completed or until an abnormal condition or indication is observed. When the test procedure results in an abnormal indication or condition, one or more malfunctions **<malfunction>** are provided. For each malfunction, the possible corrective actions

Downloaded from http://www.everyspec.com

<corr-action> shall be provided (see figure 9). When required, the corrective action may include a reference **<reference>** to the WP or paragraph that contains the data to perform the corrective action.

(2) Separate operational checkout procedures **<opchk>**. When it is determined that the operational checkout procedures shall be separate from the troubleshooting procedures, the operational checkout procedures shall be included under the heading "OPERATIONAL CHECKOUT." Operational checkout procedures shall be developed in accordance with 5.3.4.6.3d.

(3) Separate troubleshooting procedure **<trblsht>**. When it is determined that the troubleshooting procedures shall be separate from the operational checkout procedures, the troubleshooting procedures shall be included under the heading "TROUBLESHOOTING." Troubleshooting procedures shall be developed in accordance with 5.3.4.6.4c.

e. Post-operational shutdown procedures. Procedures to return the aircraft, aircraft system, or equipment to its normal configuration, prior to operational checkout or troubleshooting setup, if required, shall be included. When applicable, procedures shall be included for both normal shutdown **<shutdown>** and emergency shutdown **<emergshtdn>**.

5.3.4.7 Functional flow diagram work packages **<ffdiagwp>**. A WP shall be developed for the aircraft and each of its systems and subsystems containing a set of functional flow diagrams **<ffdiagram>**. These WPs shall be prepared as a maintenance support document primarily for use with troubleshooting procedures. However, it may also be used in conjunction with maintenance actions. The functional flow diagrams shall be those which were considered too large, complex or unusable if incorporated within the system troubleshooting manual. Refer to MIL-STD-3001-1, Appendix D, for the preferred size, style, and presentation format of these functional flow diagrams.

5.3.4.7.1 Functional flow diagram technical content requirements. The functional flow diagram shall present a closed-loop representation of the operation of the aircraft weapon system, as an operational unit, and its systems and subsystems. Point-to-point inter-relationship from one system to another at the integrated system level and point-to-point wiring from one WRA to another system and subsystem level shall be shown. Wire numbers may appear on the diagram when required to ensure clarity of presentation. Input-output signals between subsystems, controls, and indicators shall be included. The following shall be illustrated as required: test points supporting organizational level testing capability and noting the accuracy and resolution of all signals; wave shapes, including scope settings, if applicable; controls and indicators referred to in troubleshooting procedures; and mechanical linkage. The following detailed requirements shall apply:

a. The concept of separation of "airframe" and "electronic" systems is not acceptable in this presentation. When the airframe portion of a system and the electronic portion of a system are functionally dependent on each other for operation, the overall system shall be presented as a unit.

Downloaded from http://www.everyspec.com

b. The basic layout of the diagram shall present signal flow from left to right, starting at a power source or mechanical input and terminating at an end point, such as a display or surface control.

c. A WP shall be developed for each system installed in the aircraft in a logical order, beginning with the aircraft as the identified end item (or integrated weapon systems), and progressing through each ancillary subsystem of the integrated weapon system, followed by the remaining systems of the aircraft weapon system that are not dependent on the operation of the integrated system.

d. As a reference document supporting both the operational checkout and troubleshooting, and maintenance tasks, these diagrams shall contain required documentation without inordinate referencing to any manual of the organizational level manual set.

5.3.5 Aeronautical equipment, airborne weapons/equipment, training systems, and support equipment testing and troubleshooting work packages. Testing and troubleshooting content information for aeronautical equipment, airborne weapons/equipment, training systems, and support equipment is identical to the aircraft and aircraft systems testing and troubleshooting WP requirements contained in 5.3.4.6 through 5.3.4.6.5, except that the term "testing" shall be used in lieu of "operational checkout." The style and format for the testing and troubleshooting procedures will vary depending on their complexity and intended presentation.

5.3.6 Engine testing and troubleshooting work packages **(intermediate and depot maintenance only)**. WPs shall be developed for testing and troubleshooting data that will enable a technician to determine, isolate, and remedy performance difficulties on the uninstalled engine, including its systems and accessories. Testing and troubleshooting data shall also locate and identify malfunctions caused through interaction of integrated engine systems. The technical content requirements for these testing and troubleshooting WPs are provided in 5.3.6.1 and 5.3.6.2. The style and format for these testing and troubleshooting procedures will vary depending on their complexity and intended presentation. Refer to MIL-STD-3001-1, Appendix B, for NAVAIR preferred page format output presentation.

5.3.6.1 Engine testing procedures work package **<engtestwp>**. This WP shall contain complete test instructions, including preparation for test for the appropriate maintenance level. Test data pertaining to specific testing conditions and instructions required for the use of support equipment, if applicable, shall be included. If an engine malfunction occurs during the test, reference shall be made to the appropriate troubleshooting WP. The following information shall be included in the WP, as applicable:

a. Introduction **<intro>**. When required, an introduction shall be included explaining how the testing procedures are to be used to perform testing and how they relate to the associated troubleshooting WPs.

b. General procedures and precautions **<genproc>**. Any general procedures that must be performed prior to testing, and precautions that must be taken during the performance of the test procedure shall be included. Adjustment procedures that must be performed prior to or during the testing procedures shall also be included.

Downloaded from http://www.everyspec.com

c. Standard charts and conversion tables <**perfevaldata**>. Performance evaluation charts, curves, and tables depicting engine operating parameters shall be included. Correction charts shall be included to show correction factors for performance evaluation. A table of standard temperature conversions may also be included. Charts and tables shall also reflect any changes in operating characteristics performance for an engine that is installed, and when it is uninstalled.

d. Testing required after special repairs <**specreptst**>. A figure or table shall be included containing tests that must be performed for engine parts that have been replaced.

e. Test requirements <**testreq**>. A list of specific test requirements for engine repairs shall be included. The listing shall have the following entries:

(1) "Parts/Modules Replaced or Repaired."

(2) "Functional Test."

(3) "Performance Test."

(4) "Comments."

f. Engine inspection <**enginspect**>. Those inspection procedures that must be accomplished prior to engine test shall be included.

g. Abnormal conditions during operation <**abnormcond**>. Any abnormal conditions that can be observed during the startup and testing of the engine shall be included.

h. Engine operation under unusual conditions <**unusualcond**>. Any procedures that must be followed when the engine is operating in unusual environmental conditions, such as extreme heat or desert operation, shall be included.

i. Engine operating limits <**oplimit**>. Engine operating limits shall be provided as narrative text or as lists or tables depending on complexity. When the limit data is provided in a list or table, for each item requiring operating limits, a limit or a series of limits, shall be listed along with any special remarks that may apply, such as a reference to a graph or procedure, a statement containing the normal limit, or other data pertinent to the operating limits.

j. Engine start <**engstart**>. Procedures for starting the engine prior to test shall be included.

k. Preparation for test <**testprep**>. Setup procedures <**proc**> required to prepare the engine for test shall be included. Reference shall be made to assembly and disassembly procedures in applicable maintenance WPs, when necessary. Instrumentation and fluid, air, and electrical supply requirements shall be included. The applicable test system and engine adapter stand or cell shall be listed as support equipment. A reference to the test system manual containing the procedures for operation of the test system, and the description, location of instrumentation, and controls or indicators shall be included. This information is not to be duplicated in the engine maintenance manual. Other support equipment required for test setup, such as special adapter assemblies peculiar to the engine being tested and special fittings to be installed in sensing lines for monitoring and test instrumentation, shall be listed in the support equipment list, if not covered in the engine test system manual. When a special adapter manual

Downloaded from http://www.everyspec.com

or supplement for adaptation of the engine to the stand or cell is available or is being prepared, the adapter manual or supplement shall be referenced and only those procedures necessary to ensure complete installation and removal instructions shall be included. Operation, installation, description, and location of items, such as indicator lights, switches, fuses, and digital meters, are to be included in the adapter assembly maintenance manual and are not to be duplicated in the engine maintenance manual.

l. Engine test **<engtest>**. The engine test shall consist of a series of test procedures **<testproc>** for each functional test that must be performed on the engine to ensure proper operation or lead to a fault symptom or malfunction. These test procedures shall consist of a series of numbered steps and substeps **<step>** that lead to an indication or condition **<condition>**. Based on these indications or conditions, a corrective action **<action>** is provided. This corrective action can either be stated as a specific remedy or can be a reference to a detailed troubleshooting procedure WP. This process is continued until the complete test procedure is completed. The following supporting test data shall accompany the test procedures, if applicable:

(1) Test and penalty schedules. A description of the sequence and manner of accomplishing a functional or performance evaluation of the engine shall be included. All checks and adjustments shall be described in detail with appropriate references to charts or curves. For performance evaluation, a test schedule may be presented in tabular form.

(2) Performance evaluation worksheet.

(3) Penalty applications. Penalty applications shall be included outlining the additional testing required for parts reinstalled or replaced following successful completion of a performance run and shall contain the following entries:

(a) "Nomenclature."

(b) "Reinstallation Test."

(c) "Replacement Test."

(d) "Comments."

NOTE

A paragraph shall be inserted immediately following the table of penalty applications to read as follows:

"Parts removed to gain access to other parts or areas shall invoke the same penalties, in accordance with the table of penalty applications, as parts replaced to correct deficiencies and malfunctions. In the event that more than one penalty is invoked, the most severe shall apply."

m. Engine shutdown. Procedures to return the engine to its normal configuration, prior to test setup, if required, shall be included. When applicable, procedures shall be included for both normal shutdown **<shutdown>** and emergency shutdown **<emergshtdn>**.

Downloaded from http://www.everyspec.com

n. Engine post-test <**postest**>. Any procedures required to be performed after engine testing has been completed shall be included.

5.3.6.2 Engine troubleshooting work package <**trblshtwp**>. Troubleshooting procedures for detecting, isolating, and correcting engine, engine systems, modules, and component failures and malfunctions shall be developed. Procedures shall contain special techniques, methods, limits, and instrumentation requirements, as necessary, for effective troubleshooting. Procedures shall cover not only troubles most likely to occur, but also those of a less frequent and more complex nature. Information shall be arranged in the order of probable occurrence and shall guide the technician, in as practical a manner as possible, to the cause of equipment failure or malfunction and its repair. The following detailed information shall be included in the WP, as applicable:

a. Introduction <**intro**>. When required, an introduction shall be included explaining how the troubleshooting procedures are to be used to perform troubleshooting and how they relate to the associated engine testing WP. When applicable, a consolidated list of malfunctions or systems that reference or link to the applicable troubleshooting procedures shall be included.

b. General procedures and precautions <**genproc**>. Any general procedures that must be performed prior to or during troubleshooting, including any electrical continuity testing, shall be included. Precautions that must be taken during the performance of the troubleshooting procedures shall also be included. Adjustment procedures that must be performed prior to or during the troubleshooting procedures shall also be included.

c. Troubleshooting procedures <**trblsht**>. Based on the complexity of the troubleshooting to be performed, troubleshooting procedures can be structured differently and, therefore, will contain different content elements. The following two methods shall be used to prepare troubleshooting procedures:

(1) Method A - Text-Logic <**trblproc-a**>. Troubleshooting procedures for specific fault symptoms <**symptom**> shall combine text and logic and consist of a series of steps and substeps <**step**> which lead to an indication or condition <**condition**> (usually stated in the form of a question). Based on these indications or conditions, a "YES" or "NO" response <**decision**> is provided that will guide the technician to either the next step or a series of steps <**step**>, or to a corrective action <**corr-action**> which may consist of a malfunction <**malfunction**> or action <**action**> followed by a reference <**reference**> to the WP or paragraph that contains the data to perform the corrective action (see figure 7). This process is continued until the complete troubleshooting procedure is completed.

(2) Method B - Text <**trblproc-b**>. Troubleshooting procedures shall consist of an all-inclusive series of specific fault symptoms <**symptom**> for the system/equipment being troubleshot. For each fault symptom, the probable malfunction or series of malfunctions <**malfunction**> that may have caused the fault shall be listed. For each probable malfunction identified, a corrective action <**action**> shall be stated with a reference <**reference**> to the WP or the paragraph that contains the procedures for the corrective action (see figure 8).

d. Post-operational shutdown procedures. Procedures to return the engine to its normal configuration, prior to troubleshooting setup, if required, shall be included. When applicable,

Downloaded from http://www.everyspec.com

procedures shall be included for both normal shutdown **<shutdown>** and emergency shutdown **<emergshtdn>**.

6. NOTES

(This section contains information of a general or explanatory nature that may be helpful, but is not mandatory.)

The notes in section 6 of MIL-STD-3001-1 apply to this Part.

Downloaded from http://www.everyspec.com

A1–F18AE-FRM-000 **003**
1 May 1997

ORGANIZATIONAL MAINTENANCE

MAINTENANCE CODE LISTING

NOSE WHEELWELL DDI

Record of Applicable Technical Directives

TD Type/Number	TD Date	Title and ECP/RAMEC Number	Date Incorporated	Remarks
F/A-18 AFC-126		Addition of (DFIRS) Deployable Flight Incident Recorder Set (ECP 321R1C1)	1 Jun 92	ECP Coverage Only
FA-18 AFC-185		Incorporation of Havequick Singars (ECP MDA-F/A18-0292R1A3R2)	15 Sep 94	ECP Coverage Only

1-1. INTRODUCTION.

1-2. All built-in test (BIT) maintenance codes are identified in this work package (table 1). A description, the related system, and the recommended maintenance action are provided for each maintenance code.

1-3. When flag note and/or hexagonal box instructions are associated with a maintenance code, the instructions are to be done before the recommended maintenance action.

1-4. Letters in the code column identify unique requirements for setting some codes:

1. M — Maintenance
2. I — Initiated BIT
3. P — Periodic BIT
4. A — Weight Off Wheels
5. G — Weight On Wheels
6. F — Fluids Test

1-5. Some maintenance codes have entries in the Possible Related Indications column. These can be fault indications provided by BIT or operator observations, depending on the type of failure. The possible related indications are considered corrected when the maintenance codes are cleared. Clearing of maintenance codes is done after corrective action or when corrective action is to ignore the maintenance code.

1-6. All caution line indications occur with LH advisory and threat warning indicator panel MASTER CAUTION light on and master caution audio. See descriptions of cautions (WP 004 00).

1

FIGURE 1. Example of a maintenance code listing work package.

Downloaded from http://www.everyspec.com

A1–F18AE-FRM-000 **003**

1-7. MULTIPLE AVIONIC MUX BUS FAIL TROUBLESHOOTING.

NOTE

Before troubleshooting any Digital Data Computer 1 and/or 2 cautions, make sure Electrical Equipment Rack (on 163427 thru 164279); also 164627 thru 164897 before F/A-18 AFC 11; MT-4955/APG-65 (A1-F18AC-742-300); on 164898 and up; also 164627 thru 164897 after F/A-18 AFC 211; MT-6809/APG-73 (Al-F18AH-742-300) is not disconnected or re-moved from the aircraft.

Avionic Mux Bus fail code set with no built-in test MUX FAIL displayed indicates that the mission computer is able to communicate with the system terminal on only one avionic mux bus (X or Y). Normal system operation may continue, but mux communication has lost one-half of its redundancy. Loss of the remaining mux bus may result in MUX FAIL and the operational failure or degradation of the system.

When multiple avionic mux bus fail maintenance codes (001 thru 030, and 062) exist, malfunction can be caused by defective avionic mux bus wiring. Using combinations of maintenance codes, tables 2 and 3 provide maintenance actions for isolation of defective avionic mux bus 1x/1y or 2x12y wiring. Multiple failures on mux bus 4x/4y, 5x/5y, or 6x/6y should be fault isolated by analysis of the failure pattern/order using mux bus schematics of the Al-F18A 0-WDM-000 or Al-F18AE-741-500.

1-8. AVIONIC MUX BUS 1 FAILS. Table 2 lists the avionic mux bus fail maintenance codes for the components listed below:

1. Air Data Computer CP-1334A/A {001)
2. On 163427 thru 164980, Left Digital Display Indicator (002)
3. Control-Converter C-10382/A (004)
4. Armament Computer CP-1342/AVQ-9(V) (006)
5. Roll-Pitch Yaw Computer CP-1330/ASW-44 (FCCA) (014)
6. Roll-Pitch-Yaw Computer
7. Command Launch Computer CP-1001A/AWG (017)
8. VHF/UHF Receiver-Transmitter No. 1 (018)
9. Digital Data Computer No. 1 (028)
10. Signal Data Computer CP-1726/ASQ-194 (030).

NOTE

Avionics mux terminals must be installed and turned on to be tested for mux bux failure. When using tables to analyze mux failures, terminals not installed or not turned on should be considered in determining multiple failure pattern.

1-9. When more than one avionic mux bus 1 fail maintenance code exists, do the maintenance action in table 2 for that combination of codes. When an avionic mux bus fail maintenance code combination exists that is not listed in table 2, do the maintenance action prescribed in table 1 for each maintenance code.

2

FIGURE 1. Example of a maintenance code listing work package. - Continued.

Downloaded from http://www.everyspec.com

A1–F18AE-FRM-000 **003**

Table 1. Maintenance Codes

CODE	MALFUNCTION (SYSTEM) MAINTENANCE ACTION	POSSIBLE RELATED INDICATIONS
000	Test value (Avionic Mux Bus)	
	NOTE Avionic Mux Bus fail code set with no build-in test MUX FAIL displayed indicates that the mission computer is able to communicate with the system terminal on only one avionic mux bux (X or Y). Normal system operation may continue, but mux communication has lost one-half of its redundancy and loss of the remaining mux bus will result in MUX FAIL and the operational failure or degradation of the system.	
001	[2] Air Data Computer Avionic Mux Bus lx/ly fail (Air Data Computer System) Replace Air Data Computer CP - 1334A/A (Al-F 18AC-560-300)	Digital Display Indicator ADV-BIT ADC BIT status message - MUX FAIL
	NOTE Avionic Mux Bus fail code set with no build-in test MUX FAIL displayed indicates that the mission computer is able to communicate with the system terminal on only one avionic mux bux (X or Y). Normal system operation may continue, but mux communication has lost one-half of its redundancy and loss of the remaining mux bus will result in MUX FAIL and the operational failure or degradation of the system.	
002	[2] Left Digital Display Indicator Avionic Mux Bus lx/ly fail (Multipurpose Display Group) [7] Replace left Digital Display Indicator IP-1317 , (WP 010 00) [8] Replace left Digital Indicator IP-1556 , (WP 020 00) If left Digital Display Indicator previously replaced, [7] do table 3, Al-F18AC-745-200 do table 3, Al-F18AG-745-200. (A1-F 18AC-745-300) Left Digital Display Indicator Avionic Mux Bus 6x/6y fail (Multipurpose Display Group) Replace left Digital Display Indicator IP-1556 , (WP 022 00) If left Digital Display previously replaced, (do table 3, A1-F18AG-745-200.)	Digital Display Indicator ADV-BIT LDDI BIT status message - MUX FAIL Left Digital Display Indicator STANDBY flashing

3/(4 blank)

FIGURE 1. Example of a maintenance code listing work package. - Continued.

Downloaded from http://www.everyspec.com

A1-F18AE-FRM-000 **007 00**
1 May 1997

ORGANIZATIONAL MAINTENANCE

WARNING, CAUTION, ADVISORY, AND FAULT INDICATIONS

F/A-18AC

1-1. INTRODUCTION.

1-2. This work package contains warning, caution, advisory, fault indicator locations, and voice alert messages. It also lists failure indications and describes the logic which causes the indication.

1-3. Table 1 describes voice alert messages sent to the pilot's headset for critical aircraft cautions and warnings. In addition to the voice alert messages, references are provided to other caution/warning indications related to the voice alerts.

1-4. Figures 1 and 2 are master locators.

1-5. Tables 2 through 16 and figures 29 and 30 describe fault indicators, list the related Digital Display Indicator ID-2150/ASM-612 maintenance (maint) codes, and provide the maintenance actions for the fault indicators. When the fault indicator and the related maintenance code exist, do the maintenance action prescribed. When a fault indicator exists and the related maintenance code does not exist, reset and ignore the fault indicator.

1-6. Tables 17 to 27 and figure 29 describe indicator panel indications and miscellaneous cockpit indications and provide schematic references for troubleshooting aid.

1-7. Figure 27 describes cautions and advisories which appear on the cockpit digital display indicators. In addition to the descriptions, reference codes, schematic references, and troubleshooting references, maintenance actions are provided. Reference codes are provided with each caution and advisory for entry points to operational flight program logic diagrams (A1-F18AC-OLD-000). The schematic references are listed to provide the maintenance technician with a troubleshooting aid. Troubleshooting references or specific maintenance actions are listed to aid in repairing the malfunction.

Table 1. Voice Alert Messages

VOICE ALERT MESSAGE	DESCRIPTION
NOTE Intercommunication and Audio System Functional Schematic A1-F18AC-600-500 may be used as an aid in troubleshooting if required.	
WARNINGS	
"Altitude, Altitude"	Indicates aircraft radar altitude below index setting (index 1, fig 21) on Height Indicator ID-2163/A (fig 21) or aircraft barometric altitude is below setting entered by way of Electronic Equipment Control C-10380/ASQ (UFC). Voice alert set when low altitude warning light (index 3, fig 21) on for radar altitude or when aircraft is below barometric altitude setting (WARN ALT), fig 1).
"Engine Fire Left, Engine Fire Left"	Indicates fire in left engine/AMAD bay. Voice alert set when FIRE (index 1, fig 17) indicator on.

1

FIGURE 2. Example of a fault indications work package.

Downloaded from http://www.everyspec.com

A1-F18AE-FRM-000 **007 00**

Table 2. Cockpit WRA Fault Indicators

INDEX	MALFUNCTION	RELATED MAINT. CODE	MAINTENANCE ACTION
1	Head-Up Display AN/AVQ-28 fault indicator latched (black and white)	098	Replace Head-Up Display Unit AN/AVQ-28 (A1-F18AC-745-300)
2	Right Digital Display Indicator fault indicator latched (black and white)	096	Replace Right Digital Display Indicator IP-1317/A (A1-F18AC-745-300)
3	Horizontal Indicator IP-1350/A fault indicator latched (black and white)	097	Replace Horizontal Indicator IP-1350/A (A1-F18AC-745-300)
4	Left Digital Display Indicator fault indicator latched (black and white)	095	Replace Left Digital Display Indicator (A1-F18AC-745-300)
5	FUEL QTY Indicator, ID fault indicator latched (yellow)	—	Normal indication with electrical power off. Do table 2 (A1-F18AC-460-200)
6	Left DCDR on	—	Replace Left Outboard Wing Pylon Encoder-Decoder Power Supply KY-842/AWB-3(V) (A1-F18AC-740-300)

2

FIGURE 2. Example of a fault indications work package. - Continued.

Downloaded from http://www.everyspec.com

A1-F18AC-FRM-000 **004 00**

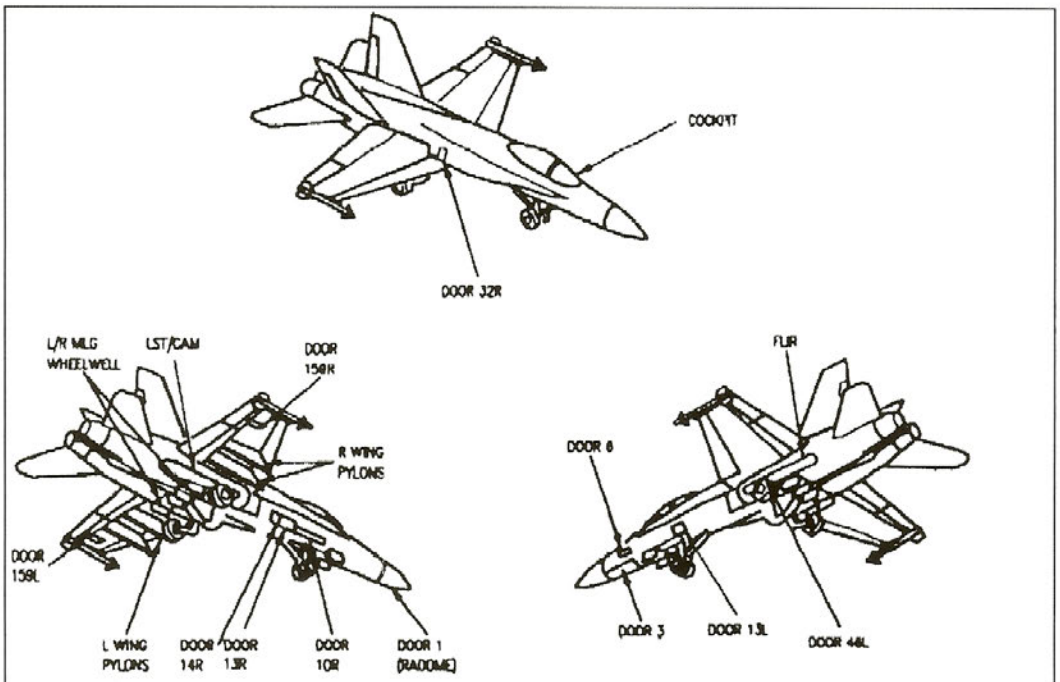

FAULT INDICATORS LOCATIONS	FIGURE NO.
COCKPIT	2
DOOR 1	3
DOOR 3	4
DOOR 6	5
DOOR 1 DR	6
DOOR 13L	7
DOOR 13R	8
DOOR 14R	9
DOOR 32N	10
DOOR 46L	11
[1] DOOR 159L/R	12
NOSE WHEELWELL	13
[1] L/R MLG WHEELWELL	14
[1] L/R WING PYLONS	15
REAR COCKPIT	2
LST/CAM	27

LEGEND

[1] 161353 THRU 161987

Figure 1. Fault Indicators Location.

3

FIGURE 2. Example of a fault indications work package. - Continued.

Downloaded from http://www.everyspec.com

A1-F18AC-FRM-000 **004 00**

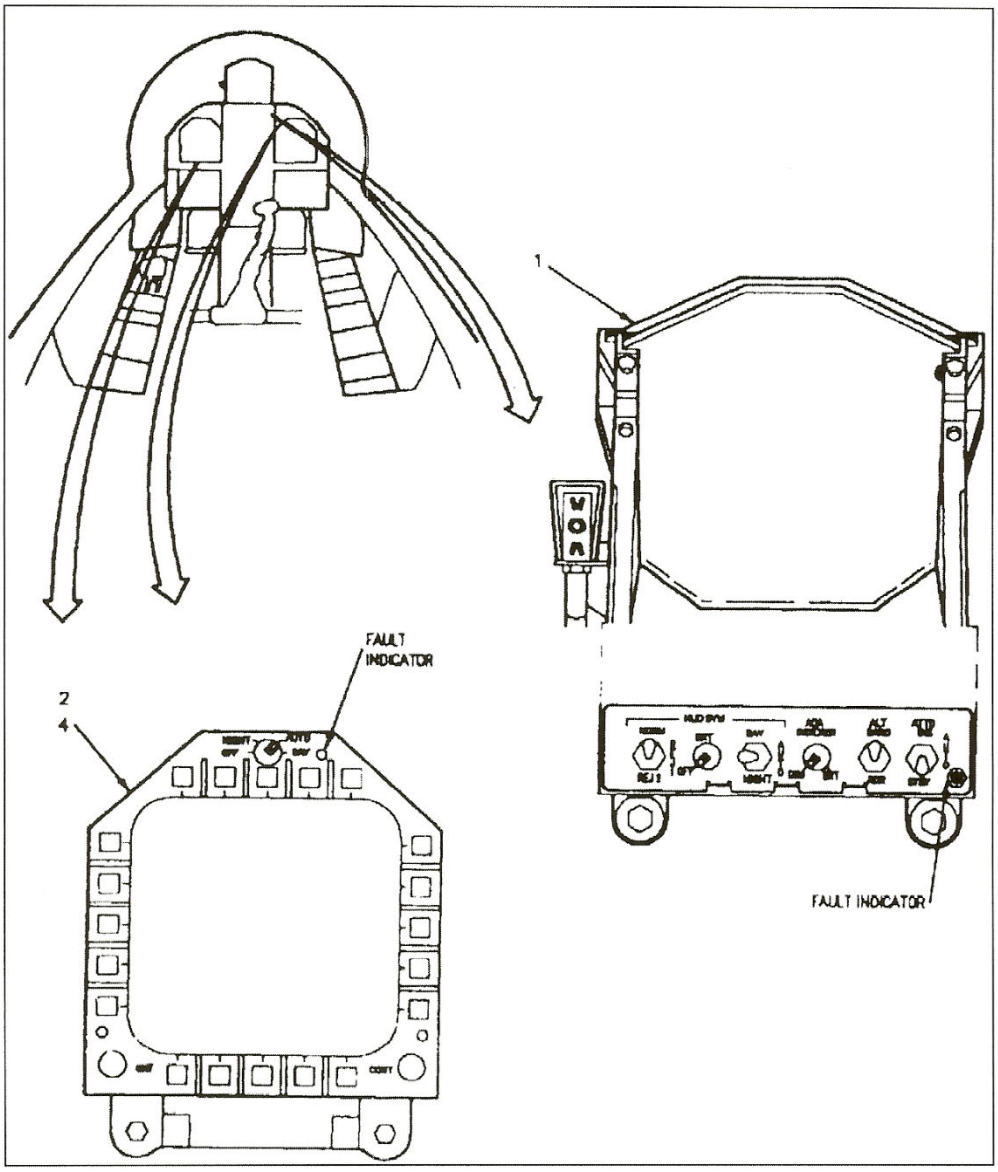

Figure 2. Cockpit WRA Fault Indicators

4

FIGURE 2. Example of a fault indications work package. - Continued.

Downloaded from http://www.everyspec.com

A1-F18AE-FRM-000 **005 00**
1 May 1997

ORGANIZATIONAL MAINTENANCE

FAULT DESCRIPTOR

F/A-18

Record of Applicable Technical Directives

TD Type/Number	TD Date	Title and ECP/RAMEC Number	Date Incorporated	Remarks
F/A-18 AFC-126		Addition of (DFIRS) Deployable Flight Incident Recorder Set (ECP 321R1C1)	1 Jun 92	ECP Coverage Only
F/A-18 AFC-185		Incorporation of Have Quick Singars (ECP MDA-F/A-18-0292R1A3R2)	15 Sep 94	ECP Coverage Only
F/A-18 AFC-211		AN/APG-65, Replacement with AN/APG-73 (ECP MDA-F/A-18-00508)	1 Dec 95	ECP Coverage Only

1-1. INTRODUCTION.

1-2. This work package contains descriptions of reported malfunctions and related maintenance codes listed by system. The action to take for each fault descriptor is listed along with other data pertinent to that descriptor. Faults are listed only when no correlating maintenance codes exist. The maintenance codes listed by system may be used as an aid in relating reported malfunctions to maintenance codes. When a maintenance code and reported malfunction exist for a system or subsystem, perform the maintenance action for the maintenance code(s) (WP 003 00) first.

1-3. When a fault descriptor does not exist or the Maintenance Action column directs the user back to a functional test, do Beyond BIT Troubleshooting (WP 002 01).

Table 1. Lighting System

FAULT DESCRIPTION	MAINTENANCE ACTION
Cockpit instrument lights falure	Do Cockpit Instrument Lights Test (A1-F18AC-440-200)
Cockpit console lights failure	Do cockpit Console Lights Test (A1-F18AC-400-200)
Cockpit utility and floodlights failure	Do cockpit Utility and Floodlights Test (A1-F18AC-240-200)
Engine instrument floodlight failure	Do APU Performance Test (A1-F18AC-240-200)
Cockpit warning/caution advisory lights failure	Do cockpit Warning/Caution/Advisory Lighting System Test (A1-F18AC-440-200)
Position lights failure	Do Position Lights Test (A1-F18AC-440-200)
Formation lights failure	Do Formation Lights Test (A1-F18AC-440-200)
Anti-collision (strobe) lights failure	Do Anti-Collision (Strobe) Lights Test (A1-F18AC-440-200)

1/(2 blank)

FIGURE 3. Example of a fault descriptor work package.

Downloaded from http://www.everyspec.com

A1-F18AE-FRM-000 **007 00**
1 May 1997

ORGANIZATIONAL MAINTENANCE

HUD DISPLAY SYMBOLOGY

F/A-18

Reference Material

Fault Reporting Manual (Confidential)..... A1–F18AC-FRM-101/(C)

Record of Applicable Technical Directives

TD Type/Number	TD Date	Title and ECP/RAMEC Number	Date Incorporated	Remarks
F/A-18 AFC-211		AN/APG-65, Replacement with AN/APG-73 (ECP MDA-F/A-18-00508)	1 Dec 95	ECP Coverage Only

1-1. INTRODUCTION.

1-2. This work package contains illustrations and descriptions (table 1) of the display elements common to HUD displays. The illustrations are not meant to represent typical displays, but to provide general appearance and positioning of the elements which make up HUD displays. The descriptions may contain schematic references which show the development of the display elements.

Table 1. HUD Display Symbology Descriptions

INDEX NO.	DISPLAY ELEMENT (REF CODE)	DESCRIPTION
1	Heading	Magnetic heading displayed when valid and indicated on moving 30° scale. Moving scale provides trend information during turns. Not displayed when HUD REJ 2 selected. (Navigation Attitude and Heading Functional Schematic, A1-F18AC-730-500). See Figure 1.
2	Data Link-/WYPT/OAP Command Heading	1. The DL command heading symbol is displayed in vector mode when vector data is valid, command heading is valid, and heading is displayed. (Vector Mode Coupled Heading Functional Schematic, A1-F18AC-630-510/(C). 2. The waypoint/offset aimpoint command heading is displayed when WYPT or OAP steering is selected. Provides steering to the selected WYPT/OAP. When a target or OAP has been designated, symbol is replaced by diamond (Bombing/navigation Functional Schematic, A1-F18AC-730-500).

1

FIGURE 4. Example of a symbology work package.

Downloaded from http://www.everyspec.com

A1-F18AE-FRM-000 **007 00**

Table 1. HUD Display Symbology Descriptions (Cont)

INDEX NO.	DISPLAY ELEMENT (REF CODE)	DESCRIPTION
3	Altitude	1. With ALT switch in BARO, barometric altitude is displayed in a box when valid (Air Data Computer System Functional Schematic, A1-F18AC-560-500). 2. With ALT switch in RDR, radar altitude is displayed in a box and identified by an R next to the box. When RDR is selected but not valid, barometric altitude is displayed with a flashing B replacing the R. If barometric altitude also not valid, only flashing B is displayed. If the barometric altitude source error correction is invalid, an X will be displayed next to the uncorrected barometric altitude. The thousand and ten thousand digits are larger than the tens, hundreds, and units (XX,xxx). When altitude less than 1000 feet, all digits are the same size (XXX). Box is removed when HUD REJ 1 selected (Electronic Altimeter System Functional Schematic, A1-F18AC-600-500).
4	Barometric Setting	The barometric setting displays the value set in the Standby Pressure Altimeter AAU-39A. When the setting is changed, the new value is displayed for 5 seconds. It is also displayed and flashed for 5 seconds when aircraft altitude is below 10,000 feet and airspeed below 300 knots, after having been above both values (Air Data Computer System Functional Schematic, A1-F18AC-560-500).
5	Data Link Discretes/Advisories	DL message discretes which appear in this area in vector mode are DATA, TILT, and DISENGAGE (Vector Mode Command Data Functional Schematic, A1-F18AC-630-510/(C).
6	Data Link Discretes/Advisories	CPL HDG displayed when FCS is coupled to data link vector mode heading command. Flashed for 10 seconds, then removed when couple unsuccessful or uncouple occurs when not commanded (Vector Mode Couple Heading Functional Schematic, A1-F18AC-630-510/(C).
7	Nosewheel Steering Case	NWS is displayed when nosewheel steering is engaged and weight on wheels. When high gain mode selected, NWS HI is displayed (Nosewheel Steering Functional Schematic, A1-F18AC-570-500).
	DISPENSE	Displayed to indicate that a threat has been detected and operator action is required to dispense countermeasures.
	DISP I/P	Indicates countermeasures dispensing is in progress.
8	Destination Range	Steering destination range numerics, destination type, and destination number are displayed in NAV and A/G modes. When waypoint steering is selected and the current waypoint has offsets, the range to the OAP, the letter O and the OAP number are displayed. When waypoint steering is selected and the current waypoint or mark does not have offsets, range numerics, W (waypoint) or M (mark) and the waypoint and mark number are displayed. When a target is designated, target range and TGT are displayed. TACAN steering is indicated by displaying TACAN range and TACAN station identification. Display removed when HUD REJ 2 selected (Navigation Velocity and Position Keeping Functional Schematic, A1-F18AC-730-500.

2

FIGURE 4. Example of a symbology work package. - Continued.

Downloaded from http://www.everyspec.com

A1-F18AE-FRM-000 007 00

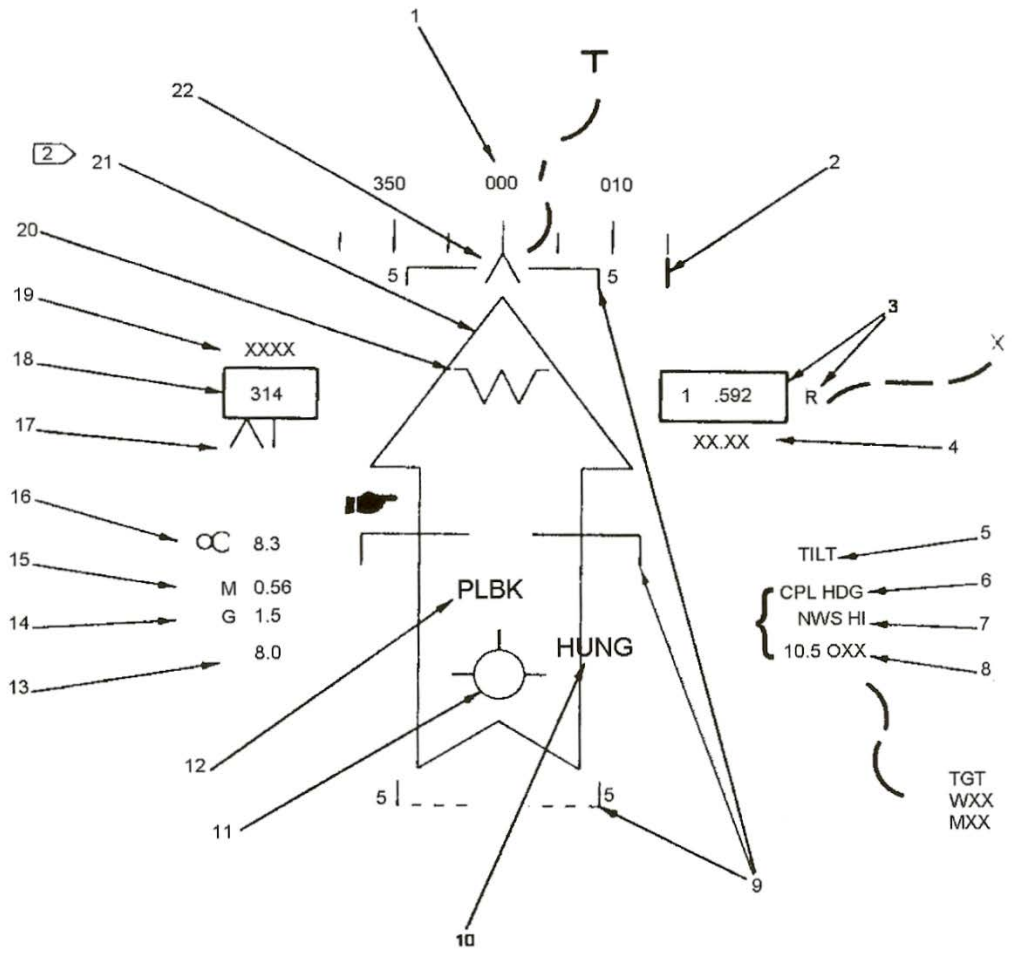

Figure 1. Mode Independent HUD Symbology.

3/(4 blank)

FIGURE 4. Example of a symbology work package. - Continued.

Downloaded from http://www.everyspec.com

A1–AV8BB-SRM-200 **084 00**
1 October 1988

ORGANIZATIONAL MAINTENANCE

TROUBLESHOOTING PROCEDURES

CODE 833 OR CODE 832 AND 833

Reference Material

Environmental Control Systems A1–F18A-410–5
Line Maintenance Access Doors A1–F18A-LMM–0
Line Maintenance Procedures A1–F18A-LMM–0

Support Equipment Required

Nomenclature	Part Number	CAGE Code
Multimeter	AN/USM-311	

1-1. Malfunction is caused by one of the items below:

Aircraft Wiring
Engine Bleed Air Secondary Pressure Regulating and Shutoff Valve
Left Engine Bleed Air Pressure Regulating and Shutoff Valve
No. 4 Relay Panel Assembly
Right Engine Bleee Air Pressure Regulating and Shutoff Valve
Secondary Bleed Air Overpressure Switch

Table 1. CODE 833 or Code 832 and 833

PROCEDURE	NO	YES
NOTE Bleed Air System Schematic (A1–F18AC-410–500) may be used as an aid when doing this procedure **CAUTION** To prevent damage to low level devices (switches/relay contacts), do not test for continuity with multimeter on the RX1 scale. Pin to pin tests that do not go through switches/relay contacts may use RX1 scale. **NOTE** The question used in logic tree "Does continuity exists" means to test for the items listed below: 1. Pin to pin test per procedural step 2. Shorts to group 3. Shorts between surrounding pins on connectors 4. Shorts between shield and conductors 5. Shield continuity 1. Do substeps below: a. Do nose wheelwell digital display indicator built-in test/reset procedures (A1–F18AC-LMM-000). b. Apply electrical power (A1–F18AC-LMM-000). c. On GND PWR control panel assembly, set and hold I switch to A ON for three seconds.		
2. Doew code 833 exists?	7	3

1

FIGURE 5. Example of a fault isolation troubleshooting procedures work package.

Downloaded from http://www.everyspec.com

A1-AV8BB-SRM-200 **084 00**

Table 1. Code 833 or Codes 832 and 833 (Cont)

PROCEDURE	NO	YES
3. Replace secondary bleed air compressor switch (A1-F18AC-410-300) and do step 11. **(T/S COMPLETED)**		
4. Do substeps below: a. Remove door 32R (A1-F18AC-LMM-010). b. Disconnect 52P-N118B from no. 4 relay panel assembly. c. On F/A-18A and F/A-18B, disconnect 85P-N002C from Signal Data Converter CV-3493/ASM-612. d. On F/A-18C and F/A-18D, open door 14R (A1-F18AC-LMM-010). e. On F/A-18C and F/A-18D, disconnect 85P-F042D from Signal Data Computer CP-1726/ASQ-194. f. On F/A-18A and F/A-18B, does continuity exist from: • 52P-N118B pin 51 to 22P-S018 pin 2? • 52P-N118B pin 34 to 85P-N002C pin 33? g. On F/A-18C and F/A-18D, does continuity exist from: • 52P-N118B pin 51 to 22P-8018 pin 2? • 52P-N118B pin 34 to 85P-F042D pin 111?		
5. Isolate defective aircraft wiring (A1-F18AC-WDM-000) and do step 11. **(T/S COMPLETED)**		
6. Isolate between no. 4 relay panel assembly wiring and relay 22K-N046 (A1-F18AC-420-300) and do step 11. **(T/S COMPLETED)**		
7. Do steps below: a. Start engine and run at 80 percent (A1-F18AC-LMM-000) b. On ECS panel assembly, set BLEED AIR switch to R OFF. c. Do nose wheelwell digital display indicator built-in test/reset procedure (A1-F18AC-LMM-000).		
8. Does code 833 exist?	9	10
9. Replace right engine bleed air pressure regulating and shutoff valve (A1-F18AC-410-300) and engine bleed air secondary pressure regulating and shutoff valve (A1-F18AC-410-300) and do step 11. **(T/S COMPLETED)**		
10. Do substeps below: a. On ECS panel assembly, set BLEED AIR switch to L OFF. b. Do nose wheelwell digital display indicator built-in test/reset procedure (A1-F18AC-LMM-000).		
11. Does code 833 exist?	12	3
12. Replace left engine bleed air pressure regulating and shutoff valve (A1-F18AC-410-300) and do step 11. **(T/S COMPLETED)**		
13. If disconnected, removed, or opened during this procedure, make sure the items listed below are connected, installed, or closed: **(T/S COMPLETED)** • Shut down engine • Remove electrical power • 22P-S018 • 52P-N118B • 85P-F042D • 85P-N002C • Door 68L • Door 14R • Door 32R		

2

FIGURE 5. Example of a fault isolation troubleshooting procedures work package. - Continued.

Downloaded from http://www.everyspec.com

A1-F18AC-130-200 **010 00**
15 August 1995

ORGANIZATIONAL MANUAL

OPERATIONAL CHECKOUT

ARRESTING GEAR SYSTEM

Reference Material

Line Maintenance Access Doors A1-F18AC-LMM-010
Line Maintenance Procedures A1-F18AC-LMM-000
Plane Captain Manual A1-F18AC-PCM-000

Support Equipment Required

Nomenclature	Part Number	CAGE Code
External Electrical Power Source		
External Hydraulic Power Source		
Gage, Push-Pull	DPPH-50	46221

1-1. (QA) ARRESTING GEAR SYSTEM OPERATIONAL TEST.

1-2. Arresting gear operational test (table 1) is used to verify correct operation of arresting gear system and that the cockpit indicating light above the arresting HOOK manual control lever is functioning correctly with respect to hook position. For component locator, refer to figure 1. The test must be completed in sequence given and any abnormal indication must be corrected before going to the next step. The following prerequisite conditions must be followed:

1. All arresting gear systems must be installed.

2. The following related systems must be installed and operational:

   a. Electrical System

   b. Hydraulic System

   c. Intercommunication and Audio System

   d. Maintenance Status Display and Recording System — F/A-18A, AND F/A-18B

   e. Mission Computer System

   f. Multipurpose Display Group

   g. Flight Incident Recording and Monitoring System — F/A-18C AND F/A-18D

1

FIGURE 6. Example of an operational checkout work package.

Downloaded from http://www.everyspec.com

A1-F18AC-130-200 **010 00**

2-1. ARRESTING GEAR SYSTEM OPERATIONAL TEST.

PROCEDURE	NORMAL INDICATION	CORRECTIVE ACTION
WARNING To prevent loss of or damage to aircraft, precise arresting hook servicing is mandatory for correct system operation. **CAUTION** To prevent damage to aircraft, door 103 must be installed before arresting hook is extended or retracted.		
1. Make sure door 103 is installed (A1-F18AC-LMM-010).		
2. Make sure electrical and hydraulic power are off (A1-F18AC-LMM-010).		
3. Jack aircraft to gain ground clearance for arresting hook assembly (A1-F18AC-LMM-010).		
4. Make sure arresting hook actuator is serviced correctly (A1-F18AC-LMM-000).		
5. Make sure arresting HOOK manual control level is set to up.		
6. Read, record and reset nose wheelwell DDI (A1-F18AC-LMM-000).	No maintenance code exists.	Do procedures specified in table 2.
7. If arresting hook is not up, manually raise and latch arresting hook.	Arresting hook latches in up position.	Do arresting hook push-pull control assembly rigging or replace push-pull control assembly (A1-F18AC-130-000).
8. Do ground intercommunications hookup using external electrical power (A1-F18AC-LMM-000).	Arresting HOOK control advisory light off.	Arresting HOOK control advisory light on with arresting HOOK manual control level 1 and arresting hook up. Refer to table 1 (WP 010 01).
9. On INTR LT control box panel assembly, set LT TEST switch to TEST.	Arresting HOOK control advisory light comes on.	Arresting HOOK control advisory light does not come on when LT TEST switch on INTR LT control box panel assembly is set to TEST. Refer to table 2 (WP 010 01).
10. Remove arresting hook aircraft ground safety pin (A1-F18AC-PCM-000).		

2

FIGURE 6. Example of an operational checkout work package. - Continued.

Downloaded from http://www.everyspec.com

PROCEDURE	NORMAL INDICATION	CORRECTIVE ACTION
WARNING To prevent death or injury to personnel or damage to equipment, arresting hook assembly must be clear of personnel and obstructions.		
11. Apply external hydraulic power (A1-F18AC-LMM-000).		
12. Using stop watch, measure time required to lower arresting hook assembly. Set arresting HOOK manual control to down.	a. Arresting hook assembly releases and lowers in 2.5 seconds maximum.	1. Arresting HOOK manual control level will not move to down position. Refer to table 3 (WP 010 01). 2. Arresting hook will not extend. Refer to table 4 (WP 010 01). 3. Arresting hook extension time is greater than 2.5 seconds, replace arresting hook selector valve (A1-F18AC-130-300) or arresting hook selector valve return check valve (A1-F18AC-130-300), or arresting hook actuator (A1-F18AC-130-300).
	b. Arresting HOOK control advisory light comes on as arresting hook assembly starts to extend and goes out when the arresting hook assembly is within 12° of full down.	1. Arresting HOOK control advisory light does not come on as arresting hook is extending. Refer to table 1 (WP 010 02). 2. Arresting HOOK control advisory light does not go out when arresting hook is fully extended. Refer to table 2 (WP 010 02).

FIGURE 6. Example of an operational checkout work package. - Continued.

Downloaded from http://www.everyspec.com

PROCEDURE	NO	YES
CAUTION To prevent damage to low level devices (switches/relay contacts), do not test for continuity with multimeter on the RX1 scale. Pin to pin tests that do not go through switches/relay contacts may use the RX1 scale.		
NOTE The question used in logic tree "Does continuity exist" means to test for the items listed below: 1. Pin to pin test per procedural step 2. Shorts to ground 3. Shorts between surrounding pins on connectors 4. Shorts between shield and conductors 5. Shield continuity		
1. Do substeps below: a. Make sure arresting hook is up and latched. b. Open door 14R (Al-F18AC-LMM-010). c. Disconnect 85P-F042D from Signal Data Computer CP-1726/ASQ-194.		
2. Does continuity exist between 85P-F042D pin 41 and aircraft ground?	3	7
3. Do steps below: a. Manually raise speed brake and install speed brake aircraft ground safety lock (A1-F18AC-PCM-000). b. Remove door 103 (AL-F18AC-LMM-010). c. Disconnect 19P-T012 from temperature compensated pressure switch.		
4. Does continuity exist between 19J-T012 pins 3 and 4?	12	5
5. Does continuity exist between 19P-T012 pin 4 and aircraft ground?	12	6
6. Does continuity exist between 85P-F042D pin 41 and 19P-T012 pin 3?	14	7
7. Does an open circuit exist between 85P-F042D pin 46 and aircraft ground?	14	8
8. Do steps below: **CAUTION** To prevent damage to aircraft, door 103 must be installed before arresting hook is extended or retracted. a. Make sure door 103 is installed (Al-F19AC-LMM-010). b. Set arresting HOOK manual control lever to down.		
9. Does an open circuit exist between 85P-F042D pin 46 and aircraft ground?	14	8

FIGURE 7. Example of a troubleshooting procedures text-logic format (Method A).

Downloaded from http://www.everyspec.com

MALFUNCTION	PROBABLE CAUSE	CORRECTIVE ACTION
POWER ON/OFF Indicator DS1 will not light.	Indicator lamp DSI burnt out.	Replace indicator lamp DSI.
	Lamp socket damaged or connections separated.	Repair/replace lamp socket.
	Faulty POWER ON/OFF switch S1.	Repair/replace POWER ON/OFF switch S1.
	Faulty resistor A1R1/A1R2.	Replace resistor.
	Faulty filter A1FL1.	Replace filter.
	Faulty connector A1J1.	Repair/replace connector A1JI.
	Faulty power cable W1.	Perform VERIFICATION OF CABLE CONTINUITY, this WP. Repair/replace cable.
Fuseholder A1F1 indicator is lit.	Fuse F1 is blown.	Replace fuse F1.
	Fuseholder damaged or improperly connected.	Repair/replace fuseholder.
BACKGROUND LIGHTING indicator DS2 will not light.	Fuse F1 is blown.	Replace fuse F1.
	Indicator lamp DS2 burnt out.	Replace indicator lamp DS2.
	Lamp socket damaged or connections separated.	Repair/replace lamp socket.
	Faulty BACKGROUND LIGHTING ON/OFF switch S2.	Repair/replace BACKGROUND LIGHTING ON/OFF SWITCH S2.
	Faulty standoff insulator or separated connections.	Repair connections/replace standoff insulator.
	Faulty +28 VDC power supply.	Perform VERIFICATION OF POWER SUPPLY VOLTAGES, this WP.
	Faulty connector A1J4/A1P1.	Repair/replace connector A1J4/A1P1.
	Faulty power supply cable.	Perform VERIFICATION OF CABLE CONTINUITY, this WP. Repair/replace power supply cable.

FIGURE 8. Example of a troubleshooting procedures tabular format (Method B).

Downloaded from http://www.everyspec.com

A1-216PA-120-000 **005 00**
31 October 1996

INTERMEDIATE MAINTENANCE

TESTING AND TROUBLESHOOTING PROCEDURES

PILOT'S MISCELLANEOUS SWITCH CONTROL PANEL
PART NUMBER 41837-1

Record of Applicable Technical Directives

TD Type/Number	TD Date	Title and ECP/RAMEC Number	Date Incorporated	Remarks
AFC 429 Revision B	1 May 1995	Electrical, Night Vision Goggle Compatible Cockpit Installation (ECP PN37R1)	28 Jun 1996	

Support Equipment Required

Nomenclature	Part Number	CAGE Code
Digital Multimeter (DMM)	77BN	26404
Power supply (0-40 vdc)	JQE36-3M	85604
Variable Transformer (0-130 vdc)	W10MT3A	24655

1-1. TESTING AND TROUBLESHOOTING.

1-2. Testing and troubleshooting includes pretest setup, operational checkout, and troubleshooting procedures. Circled uppercase letters key the malfunction symptoms to appropriate troubleshooting procedures provided in figure 1. Troubleshooting procedures assume there is but one malfunction at a time. After all repairs are made, the operational checkout should be restarted to make sure that the replacement did not introduce a new malfunction. Successful completion of the operational checkout verifies proper operation of the equipment.

2-1. PRETEST SETUP.

1. Make sure variable transformer is set to zero.
2. Connect variable transformer to control panel P94-b and P94-a.
3. Connect variable transformer to 115 vdc 400 Hz utility receptacle.
4. Turn ON variable transformer.

3-1. OPERATIONAL CHECKOUT.

CAUTION

Do not go over 5 vac to control panel, as damage to panel lamps may result.

1. Increase variable transformer output from 0 to 5 vac. Check that information plate assembly lamps increase uniformly to full brilliance.

   - If result is not as specified, refer to figure 1 (symbol A).

1

FIGURE 9. Example of a combined operational checkout and troubleshooting procedures logic flow diagram format work package.

Downloaded from http://www.everyspec.com

A1-216PA-120-000 **005 00**

2. Turn OFF and disconnect variable transformer from control panel.

WARNING

Make sure power supply is off before connecting and disconnecting leads from control panel as injury to personnel or damage to equipment may occur.

3. With power supply adjusted for 28 vdc output, connect negative lead to P94-a and positive lead to P94-A. Check that TURN RATE, NORM or ALT indicator lamps go on.

   - If result is not as specified, refer to figure 1 (symbol A).

4. Press TURN RATE switch. Check that opposite indicator lamps go on.

   - If result is not as specified, refer to figure 1 (symbol A).

5. Press TURN RATE switch so that NORM indicator lamps are on.

6. Turn OFF and disconnect power supply from control panel.

4-1. TROUBLESHOOTING PROCEDURES.

4-2. Troubleshooting procedures are provided in figure 1 and are keyed to the operational checkout results contained in paragraph 3-1.

2

FIGURE 9. Example of a combined operational checkout and troubleshooting procedures logic flow diagram format work package. - Continued.

Downloaded from http://www.everyspec.com

A1-216PA-120-000 005 00

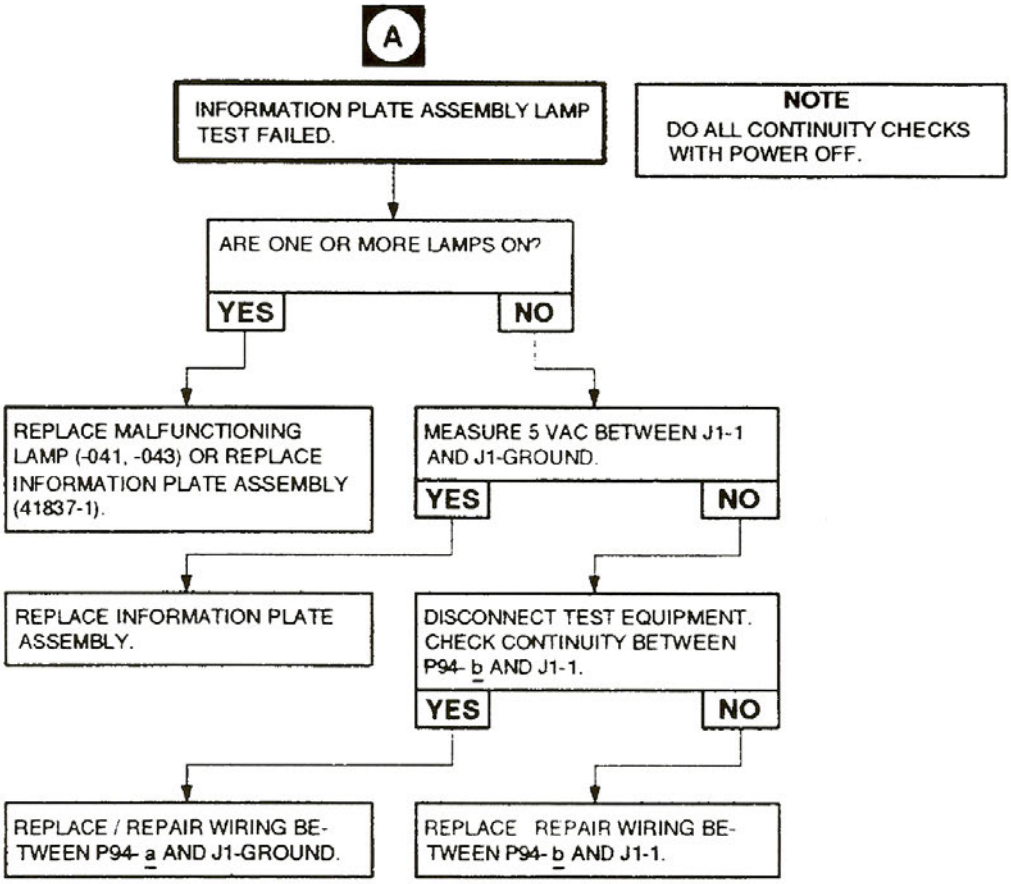

Figure 1. Troubleshooting Pilot's Miscellaneous Switch Control Panel (Sheet 1)

3

FIGURE 9. Example of a combined operational checkout and troubleshooting procedures logic flow diagram format work package. - Continued.

Downloaded from http://www.everyspec.com

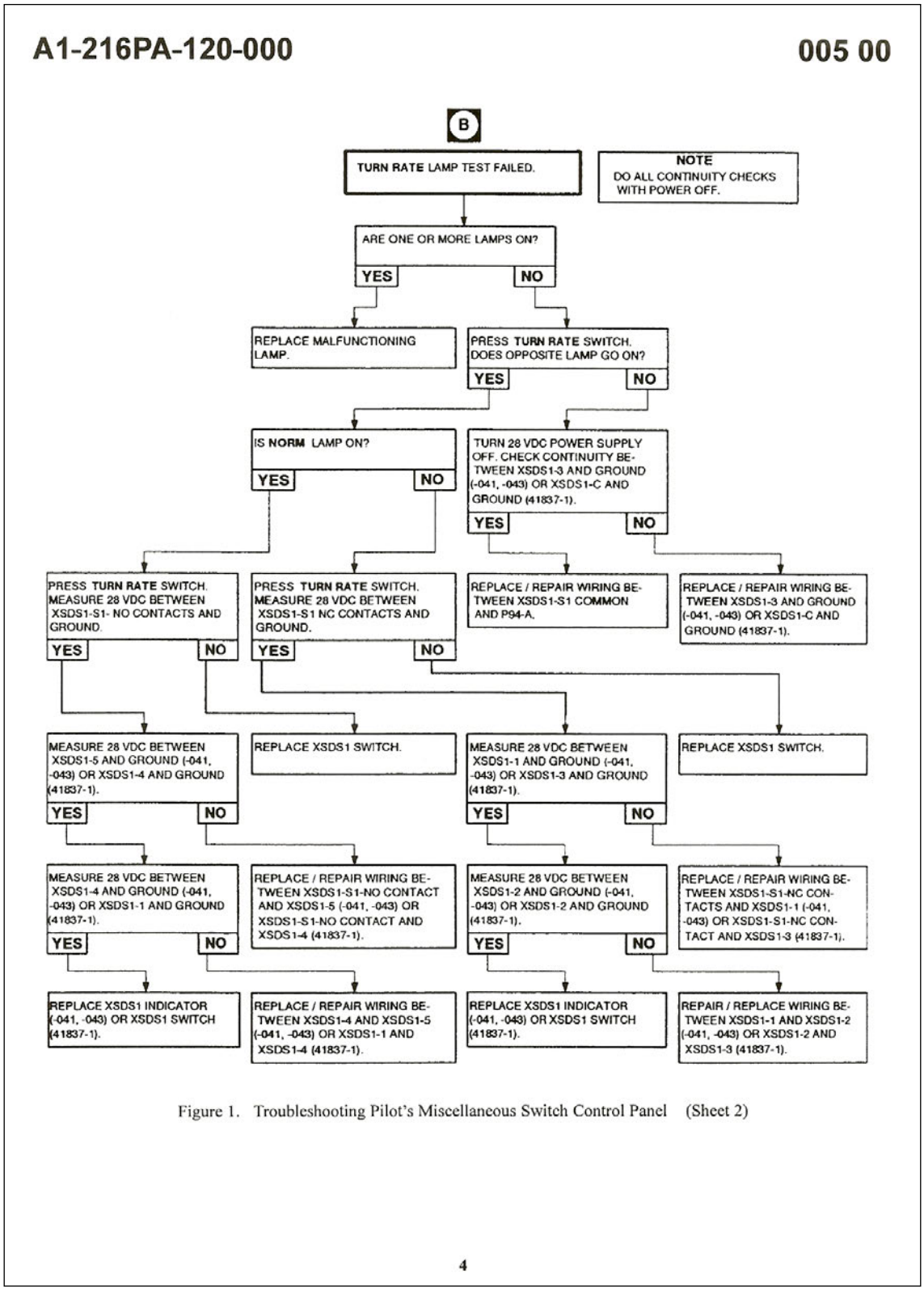

FIGURE 9. Example of a combined operational checkout and troubleshooting procedures logic flow diagram format work package. - Continued.

Downloaded from http://www.everyspec.com

CONCLUDING MATERIAL

Custodian:
Navy - AS

Preparing activity:
Navy - AS
(Project TMSS-2016-021)

NOTE: The activity listed above was interested in this document as of the date of this document. Since organizations and responsibilities can change, you should verify the currency of the information above using the ASSIST Online database at https://assist.dla.mil.