Downloaded from http://www.everyspec.com

NOT MEASUREMENT SENSITIVE

MIL-STD-3001-6(AS)
15 May 2001
SUPERSEDING
(See Section 6.)

DEPARTMENT OF DEFENSE STANDARD PRACTICE

DIGITAL TECHNICAL INFORMATION FOR MULTI-OUTPUT PRESENTATION OF TECHNICAL MANUALS

STRUCTURAL REPAIR INFORMATION (PART 6 OF 8 PARTS)

AMSC A7194 AREA TMSS

DISTRIBUTION STATEMENT A. Approved for public release; distribution is unlimited.

Downloaded from http://www.everyspec.com

FOREWORD

1. This eight-part standard establishes the requirements needed to prepare digital technical information for multi-output presentation of NAVAIR work package Technical Manuals (TMs). The technical content and mandatory style and format requirements contained in this eight-part standard can be used to develop and assemble complete TMs for aircraft weapon systems, aeronautical equipment, airborne weapons/ equipment, and support equipment work package technical manuals. The requirements are applicable for the output of paper technical manuals or for the display of page-oriented, scrollable and frame-based technical manuals on an Electronic Display System (EDS).

2. MIL-STD-3001-6 is Part 6 of 8 Parts and is incomplete without Parts 1 through 5 and Part 7 and Part 8. Part 6 establishes the technical content requirements for the preparation of information for the repair, corrosion control, and nondestructive inspection of aircraft structure and structural components at all levels of maintenance. This data can be used to develop TMs in a variety of output forms, including interactive screen presentations and page-based, printed manuals.

3. MIL-STD-3001-1 contains general preparation requirements for the multi-output presentation of NAVAIR work package TMs. MIL-STD-3001-2 through MIL-STD-3001-8 contain specific functional technical content requirements for the preparation of all NAVAIR work package TMs and revisions. Parts 1 through 8 are identified below.

MIL-STD-3001-1	Preparation of Digital Technical Information for Multi-output Presentation of Technical Manuals.
MIL-STD-3001-2	Description, Principles of Operation, and Operation Data.
MIL-STD-3001-3	Testing and Troubleshooting Procedures.
MIL-STD-3001-4	Maintenance Information with IPB.
MIL-STD-3001-5	Aircraft Wiring Information.
MIL-STD-3001-6	Structural Repair Information.
MIL-STD-3001-7	Periodic Maintenance Requirements.
MIL-STD-3001-8	Separate Illustrated Parts Breakdown (IPB).

4. MIL-HDBK-3001, Guide to the General Style and Format of U.S. Navy Work Package Technical Manuals, complements this eight-part standard. MIL-HDBK-3001 provides Navy-preferred, nonmandatory style and format requirements for the preparation of page-oriented, scrollable and frame-based work package technical manuals.

5. Beneficial comments (recommendations, additions, deletions) and any pertinent data which may be of use in improving this document should be addressed to: Commander, Naval Air Warfare Center Aircraft Division, Code 414100B120-3, Highway 547, Lakehurst, NJ 08733-5100 by using the Standardization Document Improvement Proposal (DD Form 1426) appearing at the end of this document or by letter.

Downloaded from http://www.everyspec.com

CONTENTS

PARAGRAPH PAGE

FOREWORD ii

1. **SCOPE** 1
   1.1 Scope 1
2. **APPLICABLE DOCUMENTS** 1
3. **DEFINITIONS** 1
4. **GENERAL REQUIREMENTS** 1
   4.1 General 1
   4.2 Maintenance level applicability 1
   4.3 Damage classification 1
   4.4 Damage evaluation 1
   4.5 Structure repair classification and definition 2
   4.5.1 Typical repair 3
   4.5.2 Specific repair 3
   4.5.3 Temporary repair 3
   4.5.3.1 One-time-flight repair 3
   4.5.4 Permanent repair 3
   4.5.5 Critical and noncritical area repair 3
   4.5.6 Alternate repair 4
   4.6 Selective application and tailoring 4
   4.7 Preparation of digital data for electronic delivery 4
   4.7.1 Use of the DTDs 4
   4.8 Technical content 4
   4.8.1 Work packages 4
   4.8.2 Style and format requirements 4
   4.9 Standard tables and lists 5
5. **DETAILED REQUIREMENTS** 5
   5.1 Preparation of structural repair information 5
   5.2 Work package content 5
   5.2.1 Title block **<titleblk>** 5
   5.2.2 Work package information **<wpinfo>** 5
   5.2.2.1 Reference material list **<reflist>** 5
   5.2.2.2 Record of Applicable Technical Directives **<ratd>** 6
   5.2.2.3 Support equipment required list **<selist>** 7
   5.2.2.4 Materials required list **<matlist>** 7
   5.2.2.5 Additional work package information (**ETMs and IETMs only**) 8
   5.2.3 Required aircraft structural repair information 8
   5.2.3.1 Aircraft structure visual index work package <**repindxwp**> 8
   5.2.3.2 General aircraft structural information <**genstructwp**> 9
   5.2.3.2.1 Aircraft structural description 9
   5.2.3.2.1.1 Types of construction 10

Downloaded from http://www.everyspec.com

CONTENTS

PARAGRAPH PAGE

5.2.3.2.1.2 Principle dimensions 10
5.2.3.2.1.3 Station location diagram 10
5.2.3.2.1.4 New types of materials 10
5.2.3.2.2 Aircraft leveling and aligning 10
5.2.3.2.3 Contour data 10
5.2.3.2.4 In-service tolerance 10
5.2.3.2.5 Common shop practices 11
5.2.3.2.6 Repair materials 11
5.2.3.2.7 Support of structure 11
5.2.3.2.8 Crash handling and shipping 12
5.2.3.3 Typical (common) repair data 12
5.2.3.3.1 Repair of new/peculiar structure 13
5.2.3.4 Specific repair data 13
5.2.3.4.1 Damage identification and evaluation data <**damage**> 14
5.2.3.4.2 Typical repair procedures <**typrepproc**> 14
5.2.3.4.3 Aircraft specific repair procedures <**specrepproc**> 14
5.2.3.4.3.1 Airframe sealing 14
5.2.3.4.3.2 Fuel tank sealing 14
5.2.3.4.3.3 Pressure testing 15
5.2.3.4.3.4 Control surface balancing 15
5.2.3.4.3.5 Removal and installation instructions 15
5.2.3.4.3.6 Local manufacturing or assembling 15
5.2.3.4.3.7 Repair procedure details 15
5.2.3.4.3.8 Illustrated parts breakdown data <**ipb**> 16
5.2.4 Required corrosion control repair information 16
5.2.4.1 Corrosion control materials requirements work package <**cormatwp**> 16
5.2.4.2 General information work package <**geninfowp**> 16
5.2.4.2.1 Protective covers 16
5.2.4.2.2 Corrosion prone areas 17
5.2.4.3 Corrosion control practices work packages 17
5.2.4.3.1 Typical corrosion control data work packages <**typcorwp**> 17
5.2.4.3.2 Inspection for corrosion work package <**corinspwp**> 17
5.2.4.3.3 Cleaning work packages <**corclnwp**> 17
5.2.4.3.4 Stripping work packages <**stripwp**> 17
5.2.4.3.5 Corrosion removal work packages <**corremwp**> 17
5.2.4.3.6 Chemical treatment of metal surfaces work packages <**chemtrtwp**> 18
5.2.4.3.7 Corrosion control seals and sealants work packages <**corsealwp**> 18
5.2.4.3.8 Paint systems work packages <**paintsyswp**> 18
5.2.4.3.8.1 Exterior marking 18
5.2.4.3.8.2 Interior markings 18
5.2.5 Required nondestructive inspection data requirements 18
5.2.5.1 Nondestructive inspection general information work package <**ndigeninfowp**> 19
5.2.5.2 Nondestructive inspection typical procedures work packages <**nditypwp**> 19

Downloaded from http://www.everyspec.com

CONTENTS

PARAGRAPH PAGE

5.2.5.3 Nondestructive inspection index work package <**ndindxwp**>..... 19
5.2.5.4 Nondestructive inspection specific procedures work packages <**ndispecwp**>..... 19
5.2.5.4.1 Item nomenclature <**itemnom**>..... 20
5.2.5.4.2 Item description <**itemdesc**>..... 20
5.2.5.4.3 Defect description <**defdesc**>..... 20
5.2.5.4.4 Primary NDI procedure <**priproc**>..... 21
5.2.5.4.5 Backup NDI procedure <**bkupproc**>..... 21
5.2.5.5 Content of NDI procedures..... 21
5.2.5.5.1 Illustrations for NDI procedures..... 21
5.2.5.5.2 Local manufacturing of NDI support equipment..... 22
5.2.5.5.3 Frequency of NDI..... 22
5.2.5.5.4 Preparation for NDI testing..... 22
5.2.5.5.5 Acceptance/Rejection criteria..... 22
5.2.5.5.6 Post inspection cleaning and corrosion control..... 22
5.2.5.5.7 Specific NDI testing method minimum requirements..... 22
5.2.5.5.7.1 Liquid penetrant method..... 22
5.2.5.5.7.2 Magnetic particle method..... 23
5.2.5.5.7.3 Eddy current (electromagnetic) method..... 23
5.2.5.5.7.4 Ultrasonic method..... 23
5.2.5.5.7.5 Radiographic method..... 24
5.2.6 Illustrated parts breakdown <**ipb**>..... 24
5.2.6.1 Technical content..... 25
6. **NOTES**..... 25

FIGURE

FIGURE 1. Example of an aircraft structure index..... 26
FIGURE 2. Example of a structural group repair index..... 27
FIGURE 3. Example of an NDI inspection index..... 28
FIGURE 4. Example of a structural repair GAPL..... 30

Downloaded from http://www.everyspec.com

1. **SCOPE**.

1.1 Scope. This part of the standard establishes the technical content requirements for the preparation of information for the repair, corrosion control, and nondestructive inspection of aircraft structure and structural components at all levels of maintenance. This data can be used to develop Technical Manuals (TMs) in a variety of output forms, including interactive screen presentations and page-based, printed manuals.

2. **APPLICABLE DOCUMENTS**.

The applicable documents in section 2 of MIL-STD-3001-1 apply to this Part.

3. **DEFINITIONS**.

The definitions in section 3 of MIL-STD-3001-1 apply to this Part.

4. **GENERAL REQUIREMENTS**.

4.1 General. Aircraft structure repair coverage shall contain information and instructions required to determine the extent of damage to airframe structure and structural components and to repair the damage. The information and instructions shall cover repair of all repairable damage in any location. Repairs shall comply with all relevant design requirements. Wherever practicable, only hand tools shall be used; however, use of jigs and power tools shall be specified when necessary. When applicable, instructions for one-time (ferry) flight repairs, temporary repairs, and critical area repairs shall include information on flight restrictions to be imposed until permanent repairs are completed

4.2 Maintenance level applicability. Requirements contained in this Part are applicable to all types and maintenance levels of TMs unless specifically noted in bold and in parentheses (i.e., **Support Equipment Manuals only**, **Depot Level only**, etc.).

4.3 Damage classification. Damage to aircraft structure and to structural components shall be classified in one of the following categories.

a. Negligible damage. Damage or distortion which can be permitted to exist as is.

b. Repairable damage. Damage which can be permanently corrected by reworking the damaged structure or components with no adverse effects upon structural integrity, flight characteristics, or safety of the aircraft. This includes minor replacement of parts and correction by a simple procedure such as removing dents, stop-drilling cracks, or temporary patching without placing restrictions on flight.

c. Major damage. Damage which requires replacement of structural components and major assemblies or engineering evaluation to determine the feasibility of repair.

4.4 Damage evaluation. Criteria (acceptance/rejection) for evaluating corrosion and structural damage shall be defined. Damage evaluation data peculiar to vertical take off and landing (VTOL) aircraft and short take off and landing (STOL) aircraft shall be included when applicable. Limits shall be established

Downloaded from http://www.everyspec.com

and stated for assigning the appropriate damage classification defined in 4.3. Data shall be prepared, but not limited to, the following as required:

a. External inspection for skin deformation.

b. Detailed visual inspection for damage areas.

c. Inspection for fire damage by use of portable testers or as evidenced by discoloration.

d. Inspection for corrosion from residues of aircraft fire fighting chemical materials.

e. Alignment checks.

f. Hard landing and over-G inspections.

g. Pressure tests for leaks and for strength.

h. Inspection for damage from severe engine stalls.

i. Inspection for damage from landing gear failure.

j. Inspection for damage from abnormal drag chute deployment.

k. Inspection for damage from tire blowout.

1. Inspection for damage to composite structure.

m. Inspection for wear in excess of wear tolerance limits.

n. Detailed nondestructive inspection procedures for structurally significant items.

o. Inspection for damage from rotor blade or prop-rotor contacts.

p. Inspection for damage from drive train interferences or sudden stoppages.

q. Inspection for damage from rotor system stresses.

4.5 Structure repair classification and definition. For various applications, repairs may be defined using the following terminology:

a. Typical repair.

b. Specific repair.

c. Temporary repair.

d. One-time-flight repair.

Downloaded from http://www.everyspec.com

e. Permanent repair.

f. Critical and noncritical area repair.

g. Alternate repair.

4.5.1 Typical repair. A typical repair is a repair which is applicable to more than one structural group or component covered in the manual (normal means of permanent correction).

4.5.2 Specific repair. A specific repair is a repair which covers types of damage or types of structure which cannot be adequately repaired using typical or common repairs.

4.5.3 Temporary repair. A temporary repair is one which may be made to permit the aircraft to be flown until such time as a permanent repair can be made. A temporary repair normally restores full load carrying capabilities to the required member but may be deficient from the standpoint of interchangeability of parts, aerodynamically, or with respect to fatigue life. Normally, a temporary repair will be removed and a permanent repair installed at the earliest convenient time. Instructions for temporary repairs shall include any necessary information on flight restrictions which must be observed until permanent repairs have been completed. Temporary repairs shall be as simple and practical as possible. Procedures shall require use of the most basic tools practical. Use of materials requiring unsophisticated fabrication techniques shall be stressed.

4.5.3.1 One-time-flight repair. A one-time-flight repair temporary repair which is made to restore limited load-carrying requirements to allow an aircraft to be flown to a repair station for application of permanent repairs. Instructions for one-time-flight repair shall include all necessary information on flight restrictions which must be observed during the ferry flight.

4.5.4 Permanent repair. A permanent repair is one which may be expected to equal or exceed the original design life of the repaired structure or component with no adverse effects upon the structural integrity, fatigue life, safety, or flying characteristics of the aircraft.

4.5.5 Critical and noncritical area repair. Critical area repairs are specific permanent repairs in areas which are highly stressed, fatigue critical, or corrosion prone in normal usage. Damage in these areas would affect safety of the aircraft. Information and instructions for critical area repairs shall include necessary flight restrictions required. For corrosion control purposes, structure and components of the aircraft shall be classified as critical or noncritical. An item shall be classified as critical when a single failure of the item during any operating condition could result in one of the following:

a. Significant injury to occupants of the aircraft.

b. Loss of aircraft or one of its major components.

c. Loss of control.

d. Unintentional release of or inability to release any armament store.

Downloaded from http://www.everyspec.com

4.5.6 Alternate repair. Alternate repairs shall be included when practical. When a repair involves use of an extrusion, an alternate, using sheet, bar, or tubing, shall be presented. When new types of material are required, an alternate repair using more common, generally available material shall be included.

4.6 Selective application and tailoring. This Part contains some requirements that may not be applicable to the preparation of all technical manuals. Selective application and tailoring of requirements contained in this Part shall be accomplished through the use of the Technical Manual Content Selection Matrixes contained in MIL-STD-3001-1, Appendix A. The applicability of some requirements is also designated by one of the following statements: unless specified otherwise by the requiring activity or as/when specified by the requiring activity.

4.7 Preparation of digital data for electronic delivery. Technical manual data prepared and delivered digitally in accordance with this Part of the standard shall be SGML-tagged and assembled using the modular Document Type Definition (DTD). Refer to MIL-STD-3001-1 for information on obtaining or accessing this modular DTD. SGML tags used in the modular DTD are noted throughout the text of this Part in bracketed, bold characters (i.e., **<structim>**) as a convenience for the TM author and to denote the appropriate tag to be used for the specific information when developing a document instance.

4.7.1 Use of the DTDs. The modular DTDs referenced in this Part interpret the technical content and structure for the functional requirements contained in this Part and are mandatory for use.

4.8 Technical content. Technical content requirements contained in this Part are considered mandatory and are intended for compliance. The content structure for the technical data being developed shall conform to the associated modular Document Type Definition (DTD) for Structural Repair Information. For examples of typical technical content for specific work packages covered in this standard, refer to MIL-HDBK-3001.

4.8.1 Work packages. There are basically two types of work packages (WPs). The first type is an information-oriented work package. It provides support information such as principles of operation, general descriptive information, and controls and indicators descriptions for the weapon system/equipment. Additional data that supports procedural and maintenance tasks, such as lists of materials required, lists of support equipment, etc., are also considered information-oriented WPs. The second type of WP is task-oriented. Task-oriented WPs reflect all required maintenance or operation tasks at the assigned level of maintenance and environment, material, and support equipment required for each defined task. WPs shall reflect the maintenance concept developed from the Logistics Support Analysis (LSA) or Logistics Management Information (LMI), the Level of Repair Analysis (LORA), or the approved maintenance plan, and the established repair concept (SM&R codes).

4.8.2 Style and format requirements. For mandatory style and format requirements for WP technical manuals intended for a printed, page-oriented presentation, refer to MIL-STD-3001-1, Appendix B. For mandatory style and format requirements for the on-screen display of WP technical manuals, refer to MIL-STD-3001-1, Appendix C. For examples of typical technical content for specific work packages covered in this standard and nonmandatory style and format requirements, refer to MIL-HDBK-3001.

Downloaded from http://www.everyspec.com

4.9 Standard tables and lists. Standard tables and lists are noted throughout the text of this standard in bold and in parentheses (i.e., **(standard table)**, **(standard list)**). The table and list head titles and structure of these standard tables and lists shall have no deviations.

5. **DETAILED REQUIREMENTS**.

5.1 Preparation of structural repair information. Aircraft structural repair information shall be developed and contained in Aircraft Structural Repair Information Modules **<structim>**. These information modules shall be logically subdivided into information- or task-oriented work packages.

5.2 Work package content. Each work package developed for aircraft structural repair information shall consist of the following:

a. Title block.

b. Work package information.

c. Required aircraft structural repair information.

d. Required corrosion control repair information.

e. Required nondestructive inspection information.

5.2.1 Title block **<titleblk>**. For page-based TMs, refer to MIL-STD-3001-1, Appendix B, B.5.3.2.1.1 for work package title block content requirements. For **ETMs/IETMs**, refer to MIL-STD-3001-1, Appendix C, C.5.4.1.3.

5.2.2 Work package information **<wpinfo>**. Each work package developed for aircraft structural repair information shall begin with a reference material list, a record of applicable technical directives, a support equipment required list, and a materials required list, if applicable. For **ETMs and IETMs only**, additional work package information shall be required. Refer to 5.2.2.5.

5.2.2.1 Reference material list **<reflist>**. Reference material required to complete a task or discussion within a WP shall be contained in a reference material list (**standard list**). If no reference material applies, the heading "Reference Material" shall be omitted from the work package. Guidelines for developing the reference material list are provided below.

a. Only those publications required for performance of the task covered by the WP shall be included in the reference material list.

b. Publications such as guides or standards which are not directly needed to accomplish the task (backup informational material or bibliography) shall not be listed in the reference material list even if cited in the WP text.

c. Each entry in the list shall consist of:

Downloaded from http://www.everyspec.com

(1) A title. Referenced publications within the WP by title. If the reference is to a specific WP, the WP title shall be listed below the related publication title.

(2) A number. The appropriate publication or WP number.

d. The maintenance level of publications listed is not required.

e. Referenced publications shall be presented by title in alphabetical order. The publication title, WP title and WP number shall also be identified. When two or more WPs are referenced in the same manual, they shall be listed in numerical sequence; repetition of the manual title and publication number is not required.

f. Additional WPs within the same manual that are required to complete the task or discussion shall be presented first in numerical sequence. The WP title and WP number shall also be identified. The publication number is not required.

g. Referenced publications not prepared in WP format shall be presented in numerical sequence. The title and publication number shall also be included.

5.2.2.2 Record of Applicable Technical Directives **<ratd>**. Technical directives applicable to a specific work package shall be listed in a record of applicable technical directives list (**standard list**). If no technical directives apply, the heading "Record of Applicable Technical Directives" shall be omitted from the work package. The record of technical directives shall be prepared in accordance with the following guidelines.

a. All issued technical directives having any impact on the WP shall be listed upon incorporation into the WP.

b. Approved engineering change proposals (ECPs) that have no effect on retrofit of the end item shall not be listed in the record of applicable technical directives (e.g., "no technical directive will be issued").

c. All technical directives and related ECPs or rapid action minor engineering changes (RAMECs) shall be listed upon incorporation into the WP.

(1) "TD Type/No." - Enter the type and number of the technical directive, e.g., "A6 AFC 454" or "AVC 1492." Note: The "TD Type/No." is identified on the Change Control Board (CCB) formal letter of ECP or RAMEC approval. Refer to NAVAIR 00-25-300.

(2) "TD Date" - Enter the date of issue of the technical directive. If the number of the technical directive has been assigned but the directive has not been issued, a dash (-) shall be entered.

(3) "Title and ECP/RAMEC No." - The title of the technical directive and the ECP number or RAMEC, if applicable, shall be listed. If a technical directive listed is the direct result of an approved ECP or RAMEC, the acronym ECP or RAMEC and number shall be shown in parentheses following the technical directive title.

Downloaded from http://www.everyspec.com

(4) "Date Inc." - The date the information affected by the technical directive or the ECP was incorporated into the WP.

(a) If the technical directive number has been assigned and the directive has not yet been issued (retrofit program), but the ECP that incorporates the change in the production program has been approved, the production ECP coverage shall be included, and the notation "Production coverage only" shall be entered under "Remarks."

(b) When the retrofit TD is approved and incorporated in a change or revision following the incorporation of the production ECP coverage, the TD date of issue shall be entered under "TD Date," the notation "Production coverage only" shall be removed from under "Remarks," and the date of retrofit coverage incorporation shall be listed under "Date Inc." (in lieu of the production ECP coverage incorporation date).

(5) "Remarks" - Enter any applicable remarks.

5.2.2.3 Support equipment required list **<selist>**. All support equipment (SE), including special tools required to perform operational type procedures, shall be listed (**standard list**) immediately following the record of applicable technical directive data. If no support equipment is required, the heading "Support Equipment Required" shall be omitted from the work package. Only those special tools (including torque wrenches) and equipment authorized for use at the level of maintenance covered shall be listed. Items shall be listed in alphabetical sequence by noun nomenclature. Standard hand tools shall not be listed. Illustrations shall not be prepared in support of such lists. When the manual is used by other services or commands that require usage restrictions, the item shall be identified by a symbol following the part number in parentheses. The usage of the symbol should be explained in a notation (e.g., "(AF)=USAF only," "(NS)=NAVSEA only," "(MC)=MARINE CORPS only").

5.2.2.3.1 Each support equipment entry in the list shall be identified by "Nomenclature," "Part Number" and "CAGE Code." When more than one of the same item is required, the quantity shall follow the nomenclature in parentheses.

5.2.2.3.2 If the WP contains multilevel maintenance procedures and any of the SE items are authorized for use at only certain level(s), the restrictive use shall be indicated by the use of an O, F, G, H, and/or D in parentheses following the item nomenclature.

5.2.2.4 Materials required list **<matlist>**. All materials (consumable materials and/or expendable items) required to perform maintenance type procedures shall be listed (**standard list**). If no materials apply, the heading "Materials Required" shall be omitted from the work package. Items shall be listed in alphabetical sequence by noun nomenclature. The materials required list shall be prepared in accordance with the following guidelines.

a. Each material entry in the list shall be identified by "Nomenclature," "Specification/Part Number" and "HMWS Index Number," as applicable.

(1) Unless alternate identification is approved by the requiring activity, materials shall be listed by Government specification.

Downloaded from http://www.everyspec.com

(2) If the WP contains multilevel maintenance procedures and any of the materials is authorized for use at only certain level(s), the restriction shall be indicated by the use of an O, I, and/or D in parentheses following the item nomenclature.

(3) When more than one of the same item is required, the quantity shall follow the nomenclature in parentheses.

b. Parts that require mandatory replacement (e.g., preformed packing) in the procedure shall be listed.

c. An appropriate notation shall follow the item to explain each restriction and/or quantity requirement.

5.2.2.5 Additional work package information (**ETMs and IETMs only**). In addition to the work package information required in 5.2.2, additional information about the contents of the work package shall be included for each work package, The following types of information should be included, as applicable:

a. Maintenance level.

b. Effectivity.

c. Personnel required.

d. Required conditions/system preparation checklist.

e. Special environmental conditions.

f. General safety instruction.

5.2.3 Required aircraft structural repair information. Aircraft structural repair information shall be divided into the following types of work packages. All work packages described in 5.2.3.1 through 5.2.3.4 may have an introduction **<intro>**.

a. Aircraft structure visual index work package.

b. General aircraft structural information.

c. Typical (common) repair data.

d. Specific repair data.

(1) Temporary repair data.

(2) Permanent repair data.

5.2.3.1 Aircraft structure visual index work package <**repindxwp**>. The aircraft structure visual index WP shall consist of an illustration which visually identifies each of the aircraft's major structural groups.

Downloaded from http://www.everyspec.com

This index is used with the structural group repair index (refer to 5.2.3.4) to provide a quick reference to the repair data visually. This illustration shall include the following:

a. Views of the aircraft, exploded as necessary, to clearly show location of each major structural group covered by a technical content work package (see figure 1).

b. An index number assigned to each structural group.

c. A table. This table <**repindx**> (**standard table**) may precede or follow the illustration portion of the index and shall include the following data:

(1) Item Column. This column shall show all assigned index numbers in numerical order.

(2) Nomenclature Column. This column shall show the name by which each item is identified throughout the manual.

(3) WP/Volume Number Column. When repair instructions are in the same volume as the index illustration, this column should show the number of the work package containing the structural group repair index illustration (see 5.2.3.4) for the listed item. When the structural group repair index illustration for the listed item is in a different volume, this column should show the publication number and WP number containing the index for the item.

5.2.3.2 General aircraft structural information <**genstructwp**>. General information relative to repair of aircraft structure and structural components shall be prepared and included in work packages. When repairs contained in general series manuals are acceptable for use, those procedures shall be referenced. General information shall include, but not necessarily be limited to, the following:

a. Aircraft structural description.

b. Aircraft leveling and alignment.

c. Contour data.

d. In-service tolerances.

e. Shop practices.

f. Repair materials.

g. Support of structure.

h. Crash handling and shipping.

5.2.3.2.1 Aircraft structural description. Descriptive material applicable to structural repair of the aircraft shall be developed. This shall include information of the following types plus any additional descriptive information pertinent to repair of the aircraft:

Downloaded from http://www.everyspec.com

a. Types of construction used on the aircraft.

b. Principle dimensions.

c. Station location diagrams.

d. New materials used.

5.2.3.2.1.1 Types of construction. Brief descriptions and locations of principle types of construction used in the aircraft, supported by illustrations, as applicable, shall be included. This shall include such types as cantilever construction, stressed skin, tapered skin, plastics, and honeycomb.

5.2.3.2.1.2 Principle dimensions. An illustration showing principle dimensions of the aircraft shall be prepared. All significant dimensions required for structure repair shall be included.

5.2.3.2.1.3 Station location diagram. A diagram showing location of significant stations on the aircraft shall be prepared. Reference points shall be identified as established in the engineering drawings for the aircraft.

5.2.3.2.1.4 New types of materials. Brief descriptions of relatively new or unfamiliar materials such as composite materials and high strength steels not covered in general series manuals shall be included.

5.2.3.2.2 Aircraft leveling and aligning. Information and procedures shall be included for leveling and aligning the aircraft. An illustration showing and identifying the points used in leveling the aircraft transversely and longitudinally shall be prepared. Leveling and aligning tools shall be identified and, if necessary, illustrated.

5.2.3.2.3 Contour data. Contour data and dimensions shall be defined for major structural components such as wings, vertical stabilizer, and horizontal stabilizer. This information may be presented on illustrations. Instructions shall include data necessary for construction of templates, support fixtures, and jigs for use in repairing components. Where applicable, the data shall include a list of contour drawings and master dimension drawings for the aircraft.

5.2.3.2.4 In-service tolerance. In-service tolerance information shall include the following:

a. Permissible wear tolerances in excess of manufacturing tolerances.

b. Permissible misalignment in excess of manufacturing tolerances.

c. Permissible step-gap and mismatch tolerances.

d. Aircraft surface critical contour tolerances.

e. Reaming and bushing tolerances.

f. Allowable clearances.

Downloaded from http://www.everyspec.com

5.2.3.2.5 Common shop practices. Common shop practices peculiar to the aircraft shall be included when not covered in general series manuals. The following types of information are included in this category:

a. Sheet metal forming.

b. Working titanium alloys.

c. Substitution, removal, and installation of fasteners equal to or better than original equipment.

d. Filling dimpled and countersunk holes.

e. Coin dimpling (including special tools required).

f. Repairing welds.

g. Substituting parts.

h. Local manufacturing of parts.

i. Working high strength steel.

j. Working composite materials.

5.2.3.2.6 Repair materials. Lists of all materials required to make repairs detailed in every repair work package shall be prepared. Wherever possible, Government standard parts shall be specified for repair or replacement of damaged structure. Extrusions shall be identified by material and die number or by source of supply. When practical, alternate repairs using sheet, bar, or tubing shall be included for repairs normally requiring extrusions. The following shall be shown for each item listed:

a. Nomenclature.

b. Government or commercial specification number.

c. Part number or procurement source.

d. Application.

5.2.3.2.7 Support of structure. Information and procedures for supporting the aircraft structure during each repair shall include the following as required:

a. Identification of all stressed plates or panels which require shoring or supporting of structure prior to removal.

b. Instructions for fabricating supports.

c. Instructions for using supports.

Downloaded from http://www.everyspec.com

5.2.3.2.8 Crash handling and shipping. The following types of data shall be included to cover handling and shipping of crash damaged aircraft:

a. Procedures and safety precautions for handling hazardous items such as batteries, fuel, oil, liquid oxygen, and explosive devices. The requirements of CFR 49, OSHA regulations, and general series manuals shall be complied with.

b. Procedures for lifting the aircraft shall include identification of necessary handling equipment.

c. Procedures for moving the damaged aircraft from the crash site shall include identification of necessary handling equipment, securing the aircraft, required clearances after loading, and load weights.

d. References to corrosion control and preservation manuals for applicable corrosion prevention and preservation procedures.

e. Disassembly into structural groups or sections.

f. Weight and center of gravity of each component.

g. When applicable and not included in other available manuals, crating and shipping instructions shall be included. Instructions shall include, as applicable:

(1) Manufacturing of crates.

(2) Manufacturing of cradles.

(3) Installation of equipment in crates.

(4) Support points.

(5) Weight of each component.

(6) Weight and center of gravity of each crated component.

5.2.3.3 Typical (common) repair data. Typical repairs are those which are applicable to more than one structural group or component. To avoid unnecessary duplication, typical repairs shall be covered in separate work packages and referenced as needed. Typical repair work packages <**typrepwp**> shall include, but shall not be limited to, the following:

a. Skin patch repair.

b. Transparent panel repair.

c. Honeycomb structure repair.

d. Extrusion repair.

Downloaded from http://www.everyspec.com

e. Sealed area repair.

f. Formed structure repair.

g. Plastic repair.

5.2.3.3.1 Repair of new/peculiar structure. Repair instructions and structurally significant or functionally significant information for new or peculiar structure such as tapered skins, sandwich material, honeycomb assemblies, reinforced plastics, and composite materials shall be included in separate typical repair work packages <**typrepwp**> or referenced to an existing TM, as applicable.

5.2.3.4 Specific repair data. Specific repairs shall be developed to cover types of aircraft structural damage which cannot be adequately covered using typical repairs alone. Specific repairs peculiar to vertical take off and landing (VTOL) aircraft and short take off and landing (STOL) aircraft shall be included when applicable. Specific repair work packages <**specrepwp**> shall be prepared for each major structural group. The data in these work packages shall be presented in the following sequence for each structural group:

a. Damage identification and evaluation data.

b. Typical repair procedures when applicable.

c. Specific repair procedures.

d. Illustrated parts breakdown data.

In addition, a structural group repair visual index illustration work package <**repindxwp**> shall be developed for each major structural group. Each repair index illustration work package shall precede its applicable major structural group work packages. The following shall be included on each index illustration:

a. A view of the structural group (see figure 2). Exploded views may be required to show hidden components. Each component for which instructions are prepared shall be shown.

b. An index number assigned to each illustrated component.

c. A listing (**standard list**) shall begin on the first sheet or sheets of the illustration and shall contain the following entries.

(1) ITEM. This entry shall contain all assigned index numbers in numerical order.

(2) NOMENCLATURE. This entry shall contain the proper nomenclature by which each item is identified throughout the manual.

(3) PART NUMBER. This entry shall list the part number for each item.

(4) WP NUMBER. This entry shall contain the number of the work package which contains the

Downloaded from http://www.everyspec.com

damage evaluation instructions.

5.2.3.4.1 Damage identification and evaluation data <**damage**>. Damage identification and evaluation data (refer to 4.3 and 4.4) shall be included for each component covered in the structural group repair work packages. Each applicable category of damage should be clearly defined for each component. Examples shall be prepared when necessary. Damage evaluation data shall include the following to the extent necessary to guide a technician to the procedure required to repair the aircraft:

a. Material specifications (composition, gauge, temper).

b. Structurally significant/functionally significant information.

c. Identification of damage limits.

d. Wear tolerance charts.

e. Stress classification.

5.2.3.4.2 Typical repair procedures <**typrepproc**>. Typical repair procedures developed for each component shall be referenced, as applicable (refer to 5.2.3.3).

5.2.3.4.3 Aircraft specific repair procedures <**specrepproc**>. Information and procedures shall be included for repairing all major structural assemblies which are identified as repairable. Both temporary repair procedures (including one-time-flight repairs) and permanent repair procedures shall be included. At least one work package shall be prepared for each major assembly. Additional work packages shall be prepared as required because of complexity of the data necessary to thoroughly cover a given assembly. Work packages shall be developed for the repair data described in 5.2.3.4.3.1 through 5.2.3.4.3.7.

5.2.3.4.3.1 Airframe sealing. A series of work packages shall be developed that include aircraft specific sealing information and procedures for all areas which require sealing for purposes other than corrosion control. Sealing for corrosion control purposes will be covered under corrosion control. The following shall be included in the airframe sealing work packages:

a. Identification of areas requiring sealing.

b. Type of sealant required in each area.

c. Sealing procedures.

d. Precautions to be observed while working with sealing materials.

5.2.3.4.3.2 Fuel tank sealing. Fuel tank sealing shall be covered in a separate work package or work packages.

Downloaded from http://www.everyspec.com

5.2.3.4.3.3 Pressure testing. Work packages shall be developed containing information and procedures for pressure testing of sealed compartments when such testing is required to check for leakage or structural integrity after repair.

5.2.3.4.3.4 Control surface balancing. Work packages shall be developed containing information and procedures for mass balancing and dynamic balancing of those hinged control surfaces which have balancing provisions included in their design. Mass balancing should be covered using calculated methods and using improvised methods with allowable field tolerances.

5.2.3.4.3.5 Removal and installation instructions. Work packages shall be developed containing procedures for removal and installation of all repairable structure that is not covered in the organizational level aircraft maintenance work packages.

5.2.3.4.3.6 Local manufacturing or assembling. Work packages shall be developed containing information and procedures for local manufacture or assembly for items source coded for local manufacture or assembly when this data is not available from other manuals. In addition, information and procedures shall be included for manufacturing required items such as jigs, templates, supporting fixtures, and unique packing crates when these are not covered in other manuals. Manufacturing procedures shall include dimensions and material requirements.

5.2.3.4.3.7 Repair procedure details. The specific repair procedures covered in 5.2.3.4.3.1 through 5.2.3.4.3.6 shall reflect compliance with all relevant design requirements and include the following data:

a. Definite, positive statements regarding repair decisions to preclude misinterpretation and indecision concerning use of typical repairs.

b. Cautions prohibiting all unauthorized repairs and procedures including combinations which would weaken or overstiffen structure beyond safe limits.

c. Where loads, material thickness, and margins of safety vary, the following data required to transfer design loads safely shall be included in a table or a series of tables:

(1) Location.

(2) Material thickness.

(3) Fastener size.

(4) Fastener pattern.

(5) Fastener spacing.

(6) Doubler overlap.

(7) Bonding requirements.

(8) Reinforcements.

Downloaded from http://www.everyspec.com

d. Where loads do not vary, identification of typical loads and minimum design tolerance in tension, compression, and shear.

e. Illustrations showing where various types of repairs are to be used.

f. Structurally significant/functionally significant information.

g. Rework tolerances including minimum skin thickness.

h. Contour data.

i. Procedures for constructing templates and repair jigs for use in repairing the assembly.

j. Precautions to be followed when working with toxic, corrosive, or combustible materials.

5.2.3.4.3.8 Illustrated parts breakdown data <**ipb**>. Illustrated parts breakdown and data applicable to the structure and structural components of the aircraft shall be included in the specific repair data work packages. Refer to 5.2.6 for detailed requirements.

5.2.4 Required corrosion control repair information. Corrosion control data shall contain information and procedures required to inhibit the onset of corrosion, to determine the location and extent of corrosion damage, to remove corrosion, and to apply necessary treatment to prevent further corrosion damage. When structure or components have been damaged by corrosion, applicable structure repair procedures shall be referenced to repair the damage (refer to 5.2.3). Applicable general corrosion control procedures covered in NAVAIR 01-1A-509, Aircraft Weapons Systems Cleaning and Corrosion Control, shall be referenced and not included in the aircraft specific corrosion control WPs. Specific corrosion control data peculiar to vertical take off and landing (VTOL) aircraft and short take off and landing (STOL) aircraft shall be included when applicable. Aircraft specific corrosion control data shall be divided into the following types of work packages. All work packages described in 5.2.4.1 through 5.2.4.3 may have an introduction **<intro>**.

5.2.4.1 Corrosion control materials requirements work package <**cormatwp**>. A separate work package containing lists <**cormatlist**> of all materials required to complete the procedures detailed in the corrosion control work packages shall be prepared. The following entries shall be shown, as applicable, for each item listed:

a. Nomenclature.

b. Government specification number or commercial identification.

c. Application.

5.2.4.2 General information work package <**geninfowp**>.

5.2.4.2.1 Protective covers. Protective covers required for corrosion control shall be identified, and procedures shall be included for installation on the aircraft. Illustrations shall be included as necessary.

Downloaded from http://www.everyspec.com

5.2.4.2.2 Corrosion prone areas. Those areas on the aircraft which are particularly susceptible to corrosion shall be identified. Illustrations and tables shall be prepared as necessary to aid in locating and identifying corrosion prone areas. Informational charts, when necessary, shall be obtained from the Cognizant Field Activity (CFA).

5.2.4.3 Corrosion control practices work packages. Corrosion control in most cases consists of a method for interrupting the corrosion cycle. When NAVAIR 01-1A-509, Aircraft Weapons Systems Cleaning and Corrosion Control, adequately covers the theoretical aspects of conditions leading to corrosion, it shall be referenced. Specific data required to protect a particular aircraft from damage by corrosion shall be included. Informational charts obtainable from the CFA shall be used, when available, as supplemental source data. The corrosion control practices work packages described in 5.2.4.3.1 through 5.2.4.3.8 shall be prepared, as applicable.

5.2.4.3.1 Typical corrosion control data work packages <**typcorwp**>. Typical corrosion control data is required data applicable to more than one of the structural groups or components separately covered in the manual. To avoid unnecessary duplication, typical corrosion control data shall be presented in separate work packages and referenced as needed.

5.2.4.3.2 Inspection for corrosion work package <**corinspwp**>. Data, illustrated as necessary, shall be prepared for inspecting aircraft structure and components for corrosion and damage from corrosion. Inspection data shall include the following as applicable:

a. Cleaning procedures.

b. Inspection by methods appropriate to the area on the aircraft.

c. Reference to applicable nondestructive inspection manuals for appropriate procedures when required.

d. Criteria for recognizing and evaluating corrosion damage.

5.2.4.3.3 Cleaning work packages <**corclnwp**>. A series of work packages shall be prepared containing data for cleaning the entire aircraft and for cleaning selected areas and components as necessary. Illustrations locating and identifying the materials of the exterior surface of the aircraft and areas exposed by movable surfaces shall be prepared. When cleaning requirements are peculiar to the aircraft or its components, detailed procedures shall be included.

5.2.4.3.4 Stripping work packages <**stripwp**>. Data for stripping paint and other protective coatings from the entire aircraft and for stripping selected areas and components as necessary shall be included in a series of work packages or contained in one work package, as applicable. Such data may be obtained from the CFA. When stripping instructions are peculiar to the aircraft or its components, detailed procedures shall be included. Detailed stripping procedures shall include instructions for protecting surrounding areas from contamination during stripping. All required precautions to be observed while handling or using stripping materials and equipment shall be specified.

5.2.4.3.5 Corrosion removal work packages <**corremwp**>. Data for removal of corrosion and corrosion products from aircraft structure and components shall be included in a series of work packages. Typical

Downloaded from http://www.everyspec.com

and specific procedures shall be prepared for all types of corrosion which could occur in each type of metal used on the aircraft.

5.2.4.3.6 Chemical treatment of metal surfaces work packages <**chemtrtwp**>. Data on types of chemical treatment applied during manufacturing and assembling of the aircraft shall be included in a series of work packages. A listing of all chemically treated magnesium and aluminum parts shall be included. The chemical treatment used on each listed part shall be identified by Government specification number and type. If a protective coating has not been qualified to a Government specification, a proprietary identification shall be listed. Touchup of damaged chemically treated surfaces shall be referenced to the applicable general series manual.

5.2.4.3.7 Corrosion control seals and sealants work packages <**corsealwp**>. Data for all areas where seals or sealants are used primarily for corrosion prevention shall be included in a single work package or a series of work packages, as applicable. Sealing which is covered in structure repair instructions (pressurized areas, fuel cells, etc.) shall not be repeated. Types of sealant and areas where applied during manufacturing shall be identified. Sealant identification shall be by Government specification number and type. When there is no applicable Government specification, a proprietary identification shall be listed. Illustrations and/or tables shall be prepared to show location of form-in-place seals. General series manuals for aircraft corrosion control shall be referenced for use in restoring and maintaining seals and sealants. The manufacturer's instructions shall be included (directly or by reference) for applying proprietary products.

5.2.4.3.8 Paint systems work packages <**paintsyswp**>. Data for the paint systems used on the aircraft shall be included in a single work package or a series of work packages. Illustrations and tables identifying the complete finish system (undercoat through finish coat) applied by the manufacturer on all areas of the exterior of the aircraft and areas exposed by movable surfaces shall be included. All materials listed shall be identified by Government specification and type and, when significant, by manufacturer's identification. Locations and restoration of exterior and interior markings shall also be included. Touchup and repainting (i.e., method of application) procedures shall not be included.

5.2.4.3.8.1 Exterior marking. Illustrations and tables showing location and configuration, including wording, orientation, and, where significant, size of all exterior markings applied by the manufacturer, shall be included. Applicable specification and general series manuals shall be referenced for restoration of exterior markings.

5.2.4.3.8.2 Interior markings. Illustrations and tables showing location, configuration, wording, orientation, and, where significant, size of instructional markings applied by the manufacturer on the interior of the aircraft shall be included. Markings such as part numbers, reference designation numbers, and those on plates which are part of an assembly shall be omitted. Applicable specifications and general series manuals shall be referenced for restoration procedures for interior markings.

5.2.5 Required nondestructive inspection data requirements. Aircraft nondestructive inspection (NDI) data shall include guidance and instructions for trained personnel in use of nondestructive inspection methods on peculiar aircraft structure and structural components. The data shall include instructions, procedures, and techniques applicable to the aircraft for NDI methods such as liquid penetrant, magnetic particle, eddy current, ultrasonic, and radiographic. Other methods shall be included when they provide significant improvement in inspection capabilities and are authorized by the requiring activity. Routine

Downloaded from http://www.everyspec.com

visual inspections (unaided eye, magnifying glass, borescope, optical fiber) normally shall not be included when such inspections are adequately covered in other maintenance manuals applicable to the aircraft. Detailed procedures for correcting defects shall be omitted. Specific NDI methods peculiar to vertical take off and landing (VTOL) aircraft and short take off and landing (STOL) aircraft shall be included when applicable. Aircraft nondestructive inspection data shall be divided into the following types of work packages. All work packages described in 5.2.5.1 through 5.2.5.4 may have an introduction **<intro>**.

5.2.5.1 Nondestructive inspection general information work package <**ndigeninfowp**>. General information relevant to nondestructive inspection of aircraft structure and structural components shall be included. Data on frequency of nondestructive inspections and examples of defects, supported by illustrations, shall be included to aid nondestructive inspection personnel in definition of suspected defects.

5.2.5.2 Nondestructive inspection typical procedures work packages <**nditypwp**>. Typical nondestructive inspection procedures are those which are applicable to more than one structural group or component. To avoid unnecessary duplication, typical procedures shall be presented in a series of separate work packages and referenced as needed. Repetitive setup and test equipment adjustment procedures are considered typical procedures. When nondestructive inspection procedures contained in available general manuals are acceptable for use, this data shall be referenced.

5.2.5.3 Nondestructive inspection index work package <**ndindxwp**>. A visual repair index work package shall be prepared showing the location of nondestructive inspection data for each structural group and component covered in the work packages. Each repair index illustration work package shall precede its applicable major structural group work packages (see figure 3). The following shall be included on each index illustration:

a. Views of the aircraft, exploded as necessary, to clearly show location of each structural group and component covered by a technical content work package in the manual.

b. An index number assigned to each structural group and illustrated component.

c. A listing <**ndindx**> (**standard list**) shall begin on the first sheet or sheets of the illustration and shall contain the following entries.

(1) ITEM. This entry shall contain all assigned index numbers in numerical order.

(2) NOMENCLATURE. This entry shall contain the proper nomenclature by which each item is identified throughout the manual.

(3) WP NUMBER. This entry shall contain the number of the work package which contains the damage evaluation instructions.

5.2.5.4 Nondestructive inspection specific procedures work packages <**ndispecwp**>.

a. Specific nondestructive inspection procedures shall be prepared when a structural group or component can be inspected by NDI methods and one of the following criteria applies:

(1) A saving in maintenance costs or manpower will be realized by using NDI methods.

Downloaded from http://www.everyspec.com

(2) Operational effectiveness will be favorably affected.

(3) Safe operation or reliability will be improved by using NDI methods.

b. Each structural group or component shall be covered in a separate work package. The technical content of each work package shall include the following arranged in the sequence listed:

(1) Item nomenclature <**itemnom**>.

(2) Item description <**itemdesc**>.

(3) Defect description <**defdesc**>.

(4) Primary NDI procedure <**priproc**>.

(5) Backup NDI procedure <**bkupproc**> (if required).

5.2.5.4.1 Item nomenclature <**itemnom**>. The item to be inspected shall be identified by nomenclature consistent with illustrated parts breakdown nomenclature for the item. When necessary for positive identification, part number shall be included.

5.2.5.4.2 Item description <**itemdesc**>. The following information shall be specified as applicable to the item to be inspected:

a. Material from which manufactured.

b. Heat treatment condition.

c. Method of manufacture (cast, forged, extruded, rolled, etc.).

d. Surface chemical treatment.

e. Finish coatings.

f. A concise statement of the purpose or function of the item. This shall include type and direction of load carried when pertinent.

5.2.5.4.3 Defect description <**defdesc**>. The potential defect shall be described. This shall include:

a. Characterization of the defect with respect to type (fatigue crack, delimitation, etc.).

b. Critical size.

c. Criteria such as material thickness; heat treatment condition; assembly details of electronic, pyrotechnic or mechanical components, etc., which influence choice of NDI method.

Downloaded from http://www.everyspec.com

d. Location and orientation with respect to loading or grain direction. Illustrations shall be used as necessary.

5.2.5.4.4 Primary NDI procedure <**priproc**>. A primary nondestructive inspection procedure <**proc**> shall be specified for each item to be inspected. Selection of the primary method shall be based on type of material and overall suitability of the chosen method for achieving desired results. The following factors also shall be considered in selecting the primary method:

a. There is maximum assurance that the method will detect the potential defect.

b. The method can be applied with minimum disassembly of the aircraft.

5.2.5.4.5 Backup NDI procedure <**bkupproc**>. A backup nondestructive inspection procedure <**proc**> shall be required in each case where the primary procedure does not include incontestable data for determining serviceability of the item inspected. When the primary procedure uses an instrumented method (electromagnetic, ultrasonic, radiographic), a visual method (optical, magnetic particle, penetrant) is preferred for backup providing extensive disassembly is not required.

5.2.5.5 Content of NDI procedures. Each nondestructive inspection procedure (primary or backup) shall include the following as applicable:

a. Illustrations for NDI procedures (refer to 5.2.5.5.1).

b. Local manufacturing of NDI support equipment (refer to 5.2.5.5.2).

c. Frequency of NDI (refer to 5.2.5.5.3).

d. Preparation for NDI testing (refer to 5.2.5.5.4).

e. Acceptance/Rejection criteria (refer to 5.2.5.5.5).

f. Post inspection cleaning and corrosion control (refer to 5.2.5.5.6).

g. Specific NDI testing method minimum requirements (refer to 5.2.5.5.7).

5.2.5.5.1 Illustrations for NDI procedures. Each inspection procedure shall include illustrations as necessary to support procedural text. As a minimum, the following shall be illustrated:

a. General location of the inspection area within the aircraft.

b. Specific location of the item to be inspected.

c. Location and orientation of potential defects.

Downloaded from http://www.everyspec.com

5.2.5.5.2 Local manufacturing of NDI support equipment. Procedures, including sketches, for local manufacturing of required standards, shoes, wedges, fixtures, and jigs shall be included as necessary. Materials, dimensions, surface finish, and tolerances shall be specified.

5.2.5.5.3 Frequency of NDI. Frequency of NDI shall be specified. When this requirement is covered in an applicable periodic maintenance requirements card deck, the card deck shall be referenced in lieu of repeating the requirement in the NDI work packages.

5.2.5.5.4 Preparation for NDI testing. Preparation for testing shall contain all procedures necessary to prepare the aircraft and the item to be inspected for implementation of the specified nondestructive inspection procedure. Procedures contained in other available manuals shall be referenced rather than repeated. Procedures shall include the following:

a. Instructions for placing the aircraft in proper configuration.

b. Instructions for gaining access to the item to be inspected.

c. Instructions such as cleaning, paint removing, and disassembling as necessary to prepare the item for inspection.

5.2.5.5.5 Acceptance/Rejection criteria. Reference shall be made to applicable structure repair work packages or manuals for detailed acceptance/rejection criteria.

5.2.5.5.6 Post inspection cleaning and corrosion control. When necessary, procedures shall be prepared for post inspection cleaning of the component and the inspection area. Procedures shall also be included for restoring lubricants, sealants, and protective coatings which have been disturbed during the inspection process. Procedures for restoring the aircraft to operational configuration shall be included. Procedures contained in other available manuals shall be referenced rather than repeated.

5.2.5.5.7 Specific NDI testing method minimum requirements. Each nondestructive inspection procedure, whether identified as the primary procedure or as a backup procedure, shall include as a minimum the testing information listed in 5.2.5.5.7.1 through 5.2.5.5.7.5 for the method specified. Inspection testing procedures shall include illustrations as necessary to support procedural text.

5.2.5.5.7.1 Liquid penetrant method. Include the following:

a. Preparation for testing (see 5.2.5.5.4).

b. Method of application of inspection materials.

c. Sensitivity and limitations of the penetrant material.

d. Dwell times for penetrant, emulsifiers, and developers. This shall include an indication of the temperatures at which the dwell times are valid.

e. Lighting requirements.

f. Magnification requirements (when necessary).

Downloaded from http://www.everyspec.com

g. Post inspection cleaning and corrosion control (see 5.2.5.5.6).

5.2.5.5.7.2 Magnetic particle method. Include the following:

a. Preparation for testing (see 5.2.5.5.4). This shall include identification and instructions for removal from the inspection area of all sensitive equipment which could be adversely affected by magnetic flux.

b. Type of magnetizing current (AC/DC).

c. Orientation of the magnetic field (longitudinal, circular, combined longitudinal - circular).

d. Flux density (current requirements to produce the desired strength in the magnetic field).

e. Location of coil or coils. This shall include information on contact between the item under test and the coil(s).

f. Number and duration of "Shots."

g. Location and cause of nonrelevant indications.

h. Magnification requirements (when necessary).

i. Demagnetization procedures. This shall include pertinent information concerning acceptability of a residual magnetic field after demagnetization.

j. Post inspection cleaning (see 5.2.5.5.6).

5.2.5.5.7.3 Eddy current (electromagnetic) method. Include the following:

a. Preparation for testing (see 5.2.5.5.4). This shall include equipment setup procedures such as adjusting for sensitivity and lift off. Step-by-step procedures shall be given to obtain desired meter deflection and CRT display for impedance plane from a standard or setup block.

b. Instructions for local manufacture of standards and setup blocks when required (see 5.2.5.5.2).

c. Area to be scanned.

d. Number of passes, probe translation, and scan rate.

e. Possible cause and location of nonrelevant indications.

5.2.5.5.7.4 Ultrasonic method. Include the following:

a. Preparation for testing (see 5.2.5.5.4). This shall include step-by-step procedures for adjusting the equipment to produce a desired response from a defect standard. Illustrations shall be included as necessary to show without reference to dial settings: adjustment of sweep delay, sweep length, markers,

Downloaded from http://www.everyspec.com

and response amplitude.

b. Instructions for local manufacture of standards (see 5.2.5.5.2).

c. Area to be scanned.

d. Application and type of couplant.

e. Transducer movement. Changes in response signals in relation to transducer scanning shall be described or illustrated.

f. Defect response. Illustrations shall show cathode ray tube display in relation to transducer location.

g. Possible cause and location of nonrelevant indications.

h. Post inspection cleaning (see 5.2.5.5.6).

5.2.5.5.7.5 Radiographic method. Include the following:

a. Preparation for testing (see 5.2.5.5.4). This shall include the following:

(1) Film placement. When more than one film is to be used, the number shall be stated and location of each film shall be identified.

(2) Location of the film identification marker. Use of a lead number belt shall be prescribed.

(3) Aiming point. Two dimensions shall be given for location.

(4) Location of source. Three dimensions are required, including focal point to film or focus point to aiming point. All reference points must be easily recognizable on typical, service configured aircraft. Angles shall not be used to indicate location references.

(5) Penetrameter location when required.

(6) Equipment settings (kilovoltage, milliamperage, and exposure times).

(7) Step-by-step inspection procedure. Radiation hazard warnings shall be included as necessary.

(8) Required density expressed in terms of the Hurter and Driffield (H & D) curve. The area on the film where density is to be measured shall be specified.

(9) Special film reading requirements when required.

5.2.6 Illustrated parts breakdown <**ipb**>. Illustrated parts breakdown and data applicable to the structure and structural components of the aircraft are an integral part of the technical data to be prepared in

Downloaded from http://www.everyspec.com

support of the specific repair data work packages (refer to 5.2.3.4). This IPB data shall be included in the specific repair data work packages.

5.2.6.1 Technical content. Technical content of the IPB shall be provided as prescribed in MIL-STD-3001-4, except as follows:

a. The Group Assembly Parts List (GAPL) may be expanded to include additional structural repair data, such as material and stock size (see figure 4).

b. The "Figure specific" method of identifying "USABLE ON CODES" shall be used.

6. **NOTES**.

The notes in section 6 of MIL-STD-3001-1 apply to this Part.

Downloaded from http://www.everyspec.com

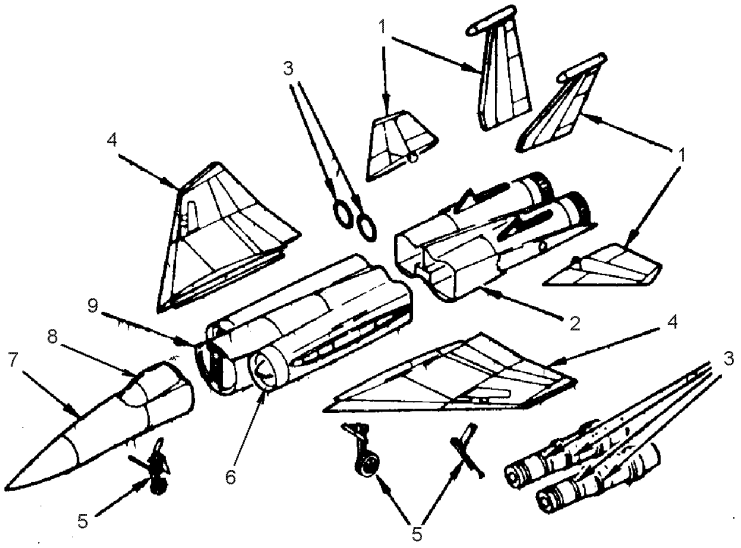

ITEM	NOMENCLATURE	WP/VOLUME NUMBER
1	Empennage	A1-F27AA-SRM-030
2	Aft Fuselage	A1-F27AA-SRM-030
3	Engine Support	A1-F27AA-SRM-040
4	Wing	A1-F27AA-SRM-020
5	Landing Gear	A1-F27AA-SRM-040
6	Air Intake Duct	A1-F27AA-SRM-020
7	Forward Fuselage	WP 003 00
8	Canopy	WP 047 00
9	Center Fuselage	A1-F27AA-SRM-020

FIGURE 1. Example of an aircraft structure index.

Downloaded from http://www.everyspec.com

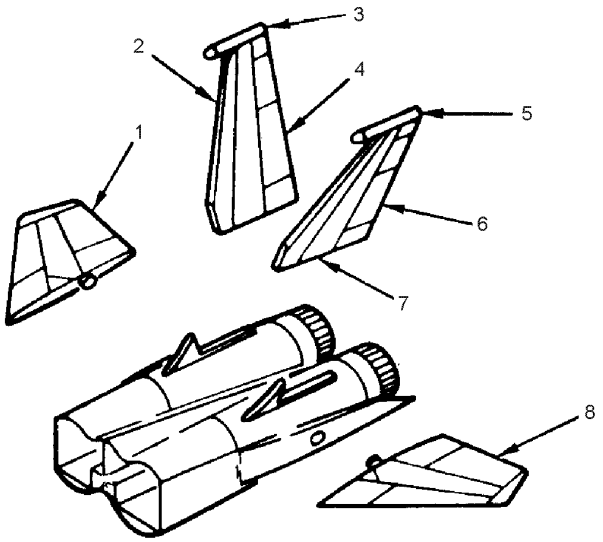

ITEM	NOMENCLATURE	PART NUMBER	WP NUMBER
1	Right Stabilator	68A210001-1	027 00
2	Right Vertical Stabilizer	68A250001-1	038 00
3	Right Vertical Stabilizer Tip	68A230163	045 01
4	Right Rudder	68A240001-1	053 00
5	Left Vertical Stabilizer Tip	68A230173	045 02
6	Left Rudder	68A240001-2	053 00
7	Left Vertical Stabilizer	68A250001-2	038 00
8	Left Stabilator	68A210001-2	027 00

FIGURE 2. Example of a structural group repair index.

Downloaded from http://www.everyspec.com

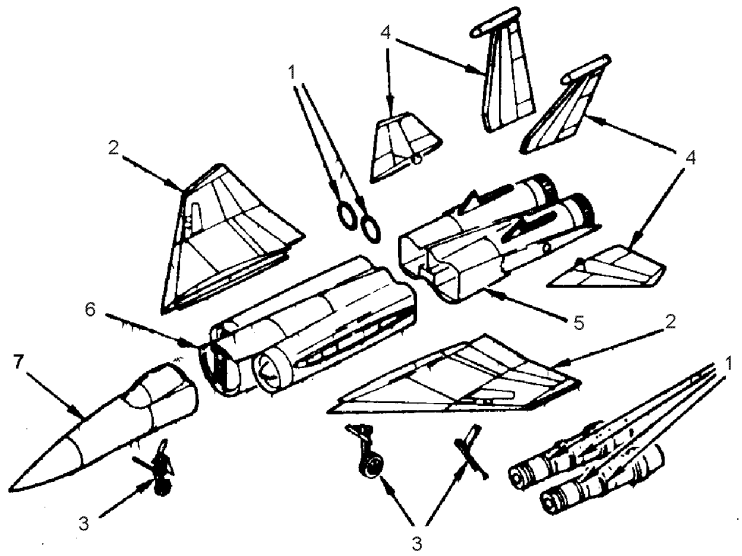

ITEM	NOMENCLATURE	WP NUMBER
1	Engine Supports	009 00
2	Wing Assembly	007 00
3	Undercarriage	010 00
4	Empennage Assembly	008 00
5	Aft Fuselage Assembly	006 00
6	Center Fuselage Assembly	005 00
7	Forward Fuselage Assembly	004 00

FIGURE 3. Example of an NDI inspection index.

Downloaded from http://www.everyspec.com

INDEX NO.	PART NUMBER	DESCRIPTION 1 2 3 4 5 6 7	MAT	STOCK SIZE	UNITS PER ASSY	USE ON CODE	SM & R CODE
	75A320946-1003	SUPPORT ASSY - NLG DOOR, FR 8 TO FR 11, OUTBD LH (76301) (NHA, WP020 00, FIG 2)			REF	A	ADDOD
	75A320946-1005	SEE ABOVE LH……			REF	B	ADDOD
	75A320946-1004	SEE ABOVE RH……			REF	A	ADDOD
	75A320946-1006	SEE ABOVE RH……			REF	B	ADDOD
1	75A320946-2021	. STIFFENER LH (76301)……			1		XBDZZ
	75A320946-2022	. SEE ABOVE RH……..			1		XBDZZ
2	75A320946-2031	. SUPPORT (76301)…….			1		PADZZ
	NAS77A3-05	. BUSHING (USE WITH INDEX 2)….			1		PAOZZ
3	75A320946-2035	. SUPPORT (76301)…….			1		XBDZZ
4	75A320946-2037	. SUPPORT LH (76301)……..			1	A	XBDZZ
	75A320946-2057	. SEE ABOVE LH……..			1	B	XBDZZ
	75A320946-2038	. SEE ABOVE RH……..			1	A	XBDZZ
	75A320946-2058	. SEE ABOVE RH……..			1	B	XBDZZ
5	75A320946-2039	. SPLICE ANGLE RH (76301)……			1	A	XBDZZ
	75A320946-2054	. SEE ABOVE……			1	B	XBDZZ
6	75A320946-2041	. SPACER (76301)……			1		PAOZZ
7	75A320946-2043	. SPLICE ANGLE LH (76301)……			1	A	XBDZZ
	75A320946-2053	. SEE ABOVE……			1	B	XBDZZ
8	75A320946-2045	. STRAP LH (76301)……			1		XBDZZ
	75A320946-2046	. SEE ABOVE RH……..			1		XBDZZ
9	75A320946-2047	. SHIM (76301)……..	AF	13	1		MGOZZ
10	75A321063-2001	. SUPPORT - AFT HINGE LH (76301)			1		PBOZZ
	75A321063-2002	. SEE ABOVE RH……..			1		PBOZZ
11	75A321070-2001	. SUPPORT - STRINGER O, FR 11… LH (76301)			1		XBDZZ
	75A321070-2002	. SEE ABOVE RH……..			1		XBDZZ
12	9M670C1	. BRACKET (76301)…….			2		PAOZZ
13	9M735-2	. BRACKET, ANGLE (76301)…….			2		PAOZZ
14	MS21062L3	. PLATENUT……..			1		PAOZZ
15	NAS673V4	. BOLT……..			1		PAOZZ
	AN960JD10LL	. WASHER (UNDER HEAD) (USE…. WITH INDEX 15)			1		PAOZZ

Downloaded from http://www.everyspec.com

	AN960JD10	. WASHER (UNDER NUT) (USE…… WITH INDEX 15)	1	PAOZZ
	NAS1291C3M	. NUT (USE WITH INDEX 15)…….	1	PAOZZ
16	NAS673V5	. BOLT……..	3	PAOZZ
	AN960JD10LL	. WASHER (UNDER HEAD) (USE…. WITH INDEX 16)	3	PAOZZ
	AN960JD10	. WASHER (UNDER NUT) (USE…… WITH INDEX 16)	3	PAOZZ
	NAS1291C3M	. NUT (USE WITH INDEX 16)…….	3	PAOZZ

CODE	USABLE ON	MODEL
A	162747 THRU 164113	TAV-8B
B	164114 AND UP	TAV-8B

FIGURE 4. Example of a structural repair GAPL.

Downloaded from http://www.everyspec.com

CONCLUDING MATERIAL

Preparing activity:
Navy - AS
(Project TMSS N277)

Downloaded from http://www.everyspec.com

STANDARDIZATION DOCUMENT IMPROVEMENT PROPOSAL

INSTRUCTIONS

1. The preparing activity must complete blocks 1, 2, 3, and 8. In block 1, both the document number and revision letter should be given.

2. The submitter of this form must complete blocks 4, 5, 6, and 7, and send to preparing activity.

3. The preparing activity must provide a reply within 30 days from receipt of the form.

NOTE: This form may not be used to request copies of documents, nor to request waivers, or clarification of requirements on current contracts. Comments submitted on this form do not constitute or imply authorization to waive any portion of the referenced document(s) or to amend contractual requirements.

I RECOMMEND A CHANGE:	1. DOCUMENT NUMBER MIL-STD-3001-6 (AS)	2. DOCUMENT DATE (YYYYMMDD) 20010515

3. DOCUMENT DIGITAL TECHNICAL INFORMATION FOR MULTI-OUTPUT PRESENTATION OF TECHNICAL MANUALS STRUCTURAL REPAIR INFORMATION (PART 6 OF 8 PARTS)

5. REASON FOR RECOMMENDATION

6. SUBMITTER

a. NAME *(Last, First, Middle Initial)*	b. ORGANIZATION	
c. ADDRESS *(Include Zip Code)*	d. TELEPHONE (Include Area Code) (1) Commercial (2) AUTOVON *(if applicable)*	**7.DATE SUBMITTED** (YYYYMMDD)

8. PREPARING ACTIVITY

a. NAME COMMANDER NAVAL AIR WARFARE CENTER AIRCRAFT DIVISION	b. TELEPHONE *Include Area Code)* (1) Commercial (732) 323-2947 (2) AUTOVON 624-2947
c. ADDRESS *(Include Zip Code)* CODE 414100B120-3 HIGHWAY 547 LAKEHURST, NJ 08733-5100	**IF YOU DO NOT RECEIVE A REPLY WITHIN 45 DAYS, CONTACT:** Defense Standardization Program Office (DLSC-LM) 8725 John J. Kingman road, Suite 2533, Ft. Belvoir, VA 22060-2533 Telephone (703) 767-6888 AUTOVON 427-6888