INCH - POUND

MIL-STD-2189(SH)
SECTION 243-1
30 August 1994

MILITARY STANDARD

DESIGN METHODS FOR NAVAL SHIPBOARD SYSTEMS

SECTION 243-1

PART 1

PROPULSION SHAFTING

AMSC N/A

AREA GDRQ

DISTRIBUTION STATEMENT A. Approved for public release; distribution is unlimited.

FOREWORD

1. This military standard is approved for use by the Naval Sea Systems Command, Department of the Navy, and is available for use by all Departments and Agencies of the Department of Defense.

2. Beneficial comments (recommendations, additions, deletions) and any pertinent data that may be of use in improving this document should be addressed to Commander, Naval Sea Systems Command, SEA 03R42, 2531 Jefferson Davis Hwy, Arlington, Va 22242-5160 by using the self-addressed Standardization Document Improvement Proposal (DD Form 1426) appearing at the end of this document or by letter.

3. The design methods presented in this document were formerly presented in a design data sheet (DDS) 243-1, but are now being published as part of a supporting section of MIL-STD-2189(SH) to promote its wider availability throughout the Department of Defense.

CONTENTS

CONTENTS

CONTENTS

FIGURES

TABLES

APPENDICES

1. SCOPE

1.1 General. The procedures established by MIL-STD-2189(SH) are applicable. This section and the basic standard are to be considered as an integral single document.

1.2 Scope. This document applies to the propulsion shafting design of all naval ships, surface and submarine, single- or multiple-shaft.

2. APPLICABLE DOCUMENTS

2.1 Government documents.

2.1.1 Specifications and standards. The following specifications and standards form a part of this document to the extent specified herein. Unless otherwise specified, the issues of these documents are those listed in the issue of the Department of Defense Index of Specifications and Standards (DODISS) and supplement thereto, cited in the solicitation (see 6.2).

SPECIFICATIONS

FEDERAL

QQ-N-281	-	Nickel-Copper Alloy Bar, Rod, Plate, Sheet, Strip, Wire, Forgings, and Structural and Special Shaped Sections
QQ-N-286	-	Nickel-Copper-Aluminum Alloy, Wrought (UNS N05500)

MILITARY

MIL-C-24615	-	Castings, Nickel-Chromium-Molybdenum-Columbium Alloy
MIL-E-21562	-	Electrodes and Rods - Welding, Bare, Nickel Alloy
MIL-E-22200	-	Electrodes, Welding, Covered: General Specification for
MIL-E-22200/3	-	Electrodes, Welding, Covered: Nickel Base Alloy; and Cobalt Base Alloy.
MIL-S-23284	-	Steel Forgings, Carbon and Alloy, for Shafts, Sleeves, Propeller Nuts, Couplings, and Stocks (Rudders and Diving Planes).
MIL-S-24093	-	Steel Forgings, Carbon and Alloy Heat Treated

STANDARD

MILITARY

MIL-STD-167-2	-	Mechanical Vibrations of Shipboard Equipment (Reciprocating Machinery and Propulsion System and Shafting) Types III, IV, and V.

(Unless otherwise indicated, copies of federal and military specifications, standards, and handbooks are available from the Standardization Documents Order Desk, BLDG. 4D, 700 Robbins Avenue, Philadelphia, PA 19111-5094.)

2.1.2 Other Government documents, drawings, and publications. The following other Government documents, drawings, and publications form a part

of this document to the extent specified herein. Unless otherwise specified, the issues are those cited in the solicitation.

DRAWING

Naval Sea Systems Command (NAVSEA)

NAVSHIPS 803-2145807 - Propulsion Shafting and Components.

(Application for copies should be addressed to: Commander, Portsmouth Naval Shipyard, Code 202.2, Portsmouth, NH 03801.)

PUBLICATIONS

Naval Sea Systems Command

NAVSEA 0900-LP-090-3020 - Guidelines to MIL-STD-167-2(SHIPS) Mechanical Vibrations of Shipboard Equipment.

(Applications for copies should be addressed to the Standardization Documents Order Desk, BLDG. 4D, 700 Robbins Avenue, Philadelphia, PA 19111-5094.)

2.2 Non-Government publications. The following document(s) form a part of this document to the extent specified herein. Unless otherwise specified, the issues of the documents which are DOD adopted are those listed in the issue of the DODISS cited in the solicitation. Unless otherwise specified, the issues of documents not listed in the DODISS are the issues of the documents cited in the solicitation (see 6.2).

American Society For Testing and Materials (ASTM)

B 138 - Standard Specification for Manganese Bronze Rod, Bar, and Shapes. (DOD adopted)

B 150 - Standard Specification for Aluminum Bronze Rod, Bar, and Shapes. (DOD adopted)

B 369 - Standard Specification for Copper-Nickel Alloy Castings.

(Application for copies should be addressed to the American Society for Testing and Materials, 1916 Race Street, Philadelphia, PA 19103.)

Peterson, R. E., Stress Concentration Factors, John Wiley and Sons, New York; 1974.

(Application for copies should be addressed to the publisher. A copy may be consulted in the technical library of the Naval Sea Systems Command.)

(Non-Government standards and other publications are normally available from the organizations that prepare or distribute the documents. These documents also may be available in or through libraries or other informational services.)

2.3 Order of precedence. In the event of a conflict between the text of this document and the references cited herein (except for related associated detail specifications, specifications, specification sheets or MS standards), the text of this document takes precedence. Nothing in this document, however, supersedes applicable laws and regulations unless a specific exemption has been obtained.

3. DEFINITIONS

3.1 Usual meanings. Unless otherwise defined herein, the terms used have their usual dictionary meanings appropriate to the context.

3.2 Abbreviations and symbols. Abbreviations and symbols used in this document are listed here for convenient reference. On occasion, the same symbol is used with a different intended meaning from that listed. In that event the symbol is specially annotated to make its meaning clear in the particular application.

Symbol	Meaning	Units
A	Cross-sectional area of shaft	$inch^2$
A_b	Cross-sectional area of shaft base material	$inch^2$
A_{bt}	Bolt cross-sectional area at parting surface	$inch^2$
A_i	Cross-sectional area of clad weld inlay	$inch^2$
Al	Aluminum	
A_{s1}	Largest area affected by hydrostatic pressure aft of the main shaft seal	$inch^2$
A_{s2}	Largest area affected by hydrostatic pressure forward of the main shaft seal	$inch^2$
A_u	Cross-sectional area of shaft at propeller nut shaft threads undercut	$inch^2$
B_e	Effective length of key	inch
b_1	Contact depth of keyway	inch
Cb	Columbium (also known as niobium, Nb)	
C_h	Key Chamfer	inch
Cr	Chromium	
CG	Center of gravity	inch
Cu	Copper	
D_b	Diameter of bolt	inch
D_{bc}	Bolt circle diameter	inch
D_f	Outside diameter of flange	inch
D_{gr}	Sleeve groove outside diameter at bottom of groove	inch
D_k	Diameter at midpoint of contact depth (b_1) at midlength of B_e	inch
D_m	Diameter of shaft taper at midlength of B_e	inch
D_{pf}	Outside diameter of propeller shaft aft flange	inch
D_t	Outside diameter at small end of shaft propeller taper	inch
D_{tc}	Diameter of thrust collar	inch
D_u	Diameter of undercut at propeller nut shaft threads	inch
d	Propeller shaft reduced bore diameter	inch
d_n	Outside diameter of propeller nut	inch
d_{th}	Outside diameter of shaft threads	inch
E	Shaft modulus of elasticity	lb/in^2
E_b	Shaft base material modulus of elasticity	lb/in^2
E_i	Clad weld inlay material modulus of elasticity	lb/in^2
E_{s1}	Sleeve modulus of elasticity	lb/in^2

Symbol	Meaning	Units
EHP	Effective horsepower	hp
F_T	Maximum push up force developed by propeller nut	pounds
FL	Fatigue limit	lb/in^2
FL_b	Fatigue limit of shaft base material	lb/in^2
FL_i	Fatigue limit of clad weld inlay	lb/in^2
FS	Factor of safety	
FS_b	Factor of safety at weld-to-shaft base material interface	
FS_i	Factor of safety at outer diameter of clad weld inlay	
FS_U	Factor of safety at propeller nut shaft threads undercut	
G	Shaft shear modulus	lb/in^2
G_b	Shaft base material shear modulus	lb/in^2
G_i	Clad weld inlay material shear modulus	lb/in^2
G_{sl}	Sleeve shear modulus	lb/in^2
H	Depth of keyway at midlength of B_e (straight side plus corner radius)	inch
I	Area moment of inertia of shaft	$inch^4$
I_b	Area moment of inertia of shaft base material	$inch^4$
ID	Shaft inside diameter	inch
I_{gr}	Area moment of inertia of sleeve groove	$inch^4$
I_i	Area moment of inertia of clad weld inlay material	$inch^4$
J	Polar moment of inertia of shaft	$inch^4$
J_b	Polar moment of inertia of shaft base material	$inch^4$
J_{gr}	Polar moment of inertia of sleeve groove	$inch^4$
J_i	Polar moment of inertia of clad weld inlay material	$inch^4$
K_b	Stress concentration factor in bending	
K_t	Stress concentration factor in torsion	
L_b	Distance between bearings	inch
L_m	Distance from start of shaft taper to midlength of B_e	inch
L_n	Length of propeller nut	inch
L_p	Distance from aft face of propeller shaft flange to CG of propeller	inch
L_{pf}	Length of propeller shaft aft flange	inch
L_{sl}	Length of sleeve aft of design point at aftermost bearing	inch
L_{str}	Straight shaft length aft of design point at aftermost bearing	inch
L_t	Length of shaft taper	inch
L_{th}	Length of propeller nut shaft threads	inch
Max	Maximum	
M_g	Gravity bending moment at any shaft location	in-lb
Min	Minimum	

Symbol	Meaning	Units
Mo	Molybdenum	
M_{oc}	Off-center bending moment	in-lb
M_p	Gravity bending moment at aftermost bearing support point	in-lb
M_T	Total bending moment	in-lb
N_b	Number of bolts (in shaft coupling)	
N_1	Number of keys	
Nb	Niobium (also known as columbium, Cb)	
Ni	Nickel	
OD	Design nominal outside diameter of shaft	inch
OD_b	Outside diameter of shaft base material	inch
OD_i	Outside diameter of clad weld inlay	inch
OD_{sl}	Outside diameter of sleeve	inch
PC	Propulsive coefficient	
Q	Mean or steady full power torque	in-lb
Q_T	Total torque including all increases required	in-lb
RPM	Propeller rotational speed	r/min
r_f	Radius of flange fillet	inch
r_g	Radius of sleeve groove fillet	inch
r_k	Radius of keyway fillet	inch
r_{pf}	Radius of propeller shaft aft flange fillet	inch
r_{tc}	Radius of thrust collar fillet	inch
S_{ar}	Resultant alternating stress	lb/in^2
S_{arb}	Resultant alternating stress at interface of clad weld inlay and shaft base material	lb/in^2
S_{arg}	Resultant alternating stress at sleeve groove diameter	lb/in^2
S_{ari}	Resultant alternating stress at outer surface of clad weld inlay	lb/in^2
S_{as}	Alternating torsional shear stress	lb/in^2
S_{asb}	Alternating torsional shear stress at interface of clad weld inlay and shaft base material	lb/in^2
S_{asg}	Alternating shear stress at sleeve groove diameter	lb/in^2
S_{asi}	Alternating torsional shear stress at outer surface of clad weld inlay	lb/in^2
S_b	Alternating bending stress	lb/in^2
S_{bb}	Alternating bending stress at interface of clad weld inlay and shaft base material	lb/in^2
S_{bg}	Alternating bending stress at sleeve groove diameter	lb/in^2
S_{bi}	Alternating bending stress at outer surface of clad weld inlay	lb/in^2
S_{bt}	Shear stress of shaft coupling bolts	lb/in^2
S_c	Steady compressive stress	lb/in^2
S_{cb}	Steady compressive stress at interface of clad weld inlay and shaft base material	lb/in^2

Symbol	Meaning	Units
S_{ci}	Steady compressive stress at outer surface of clad weld inlay	lb/in^2
S_{ck}	Allowable compressive stress of key	lb/in^2
SHP	Shaft horsepower	hp
S_s	Steady shear stress	lb/in^2
S_{sb}	Steady shear stress at interface of clad weld inlay and shaft base material	lb/in^2
S_{si}	Steady shear stress at outer surface of clad weld inlay	lb/in^2
S_{sk}	Allowable shearing stress of key	lb/in^2
S_{sr}	Resultant steady stress	lb/in^2
S_{srb}	Resultant steady stress at interface of clad weld inlay and shaft base material	lb/in^2
S_{sri}	Resultant steady stress at outer surface of clad weld inlay	lb/in^2
S_T	Tensile stress at propeller nut shaft threads undercut	lb/in^2
T	Propeller full power thrust	pound
T_{s1}	Shaft thrust due to submergence pressure aft of main shaft seal	pound
T_{s2}	Shaft thrust due to submergence pressure between main shaft seal and thrust collar	pound
T_T	Total thrust	pound
t	Thrust deduction factor	
t_c	Shaft taper at inboard coupling	in/ft
t_p	Shaft taper at propeller	in/ft
UT	Ultimate tensile strength	lb/in^2
V	Ship speed at full power	knot
V_t	Volume of taper at propeller	$inch^3$
V_{tb}	Volume of bore at propeller taper	$inch^3$
W	Width of key	inch
W_c	Weight of propeller cap	pound
W_{ic}	Weight of shaft bore internal components	pound
W_{ii}	Weight of shaft component	pound
W_n	Weight of propeller nut	pound
W_p	Weight of propeller (hub, blades, and other components)	pound
W_{pf}	Weight of propeller shaft aft flange	pound
W_{s1}	Weight of sleeve aft of design point at aftermost bearing	pound
W_{str}	Weight of shaft straight section aft of design point at aftermost bearing	pound
W_t	Weight of shaft propeller taper	pound
W_{th}	Weight of shaft threads	pound
w	Weight per unit length of shaft	lb/in
X_c	Moment arm from support point of aftermost bearing to *CG* of propeller cap	inch
X_{ic}	Moment arm from support point of aftermost bearing to *CG* of shaft bore internal components	inch
X_{ii}	Moment arm of shaft component	inch

Symbol	Meaning	Units
X_n	Moment arm from support point of aftermost bearing to *CG* of propeller nut	inch
X_p	Moment arm from support point of aftermost bearing to *CG* of propeller	inch
X_{pf}	Moment arm from support point of aftermost bearing to *CG* of propeller shaft aft flange	inch
X_{sl}	Moment arm from support point of aftermost bearing to *CG* of sleeve	inch
X_{str}	Moment arm from support point of aftermost bearing to *CG* of straight shaft length	inch
X_t	Moment arm from support point of aftermost bearing to *CG* of shaft taper	inch
X_{th}	Moment arm from support point of aftermost bearing to *CG* of propeller nut threads	inch
YP	Yield point of material	lb/in^2
YP_b	Yield point of shaft base material	lb/in^2
YP_i	Yield point of weld inlay	lb/in^2
y_t	Distance from start of shaft taper to *CG* of shaft taper	inch
y_{tb}	Distance from start of shaft taper to *CG* of shaft taper bore	inch
ρ_{icw}	Density of waterborne shaft bore internal components	lb/in^3
ρ_{sl}	Density of sleeve material	lb/in^3
ρ_{stl}	Density of steel material	lb/in^3

3.3 System of units. Unless otherwise stated or demanded by context, the U.S. conventional gravitational system of units, commonly called the foot-pound-second system (or inch-pound system) is used throughout this document. In this system the pound is a unit of force, and the slug, identically equal to one pound-second squared per foot, is the unit of mass. Often, one or more other units of mass will be found more convenient. One such unit is the pound mass, which is 0.45359237 kilogram exactly and 1/32.174 slug approximately. Another such mass unit is the pound second squared per inch, which amounts to 12 slugs exactly.

4. GENERAL REQUIREMENTS

4.1 Design requirements. Unless otherwise specifically approved, the design of main propulsion shafting shall be in accordance with the methods and criteria described herein and in Navships Drawing No. 803-2145807, or as modified in the ship specifications.

4.2 Material selection. Shafting materials shall be selected on the main considerations of fatigue characteristics and strength. Table I lists physical characteristics of materials approved for use in main propulsion shafting.

4.3 Waterborne -vs- line shafting. Shafting starting from the forward end of the main shaft seal sleeve to the aftermost end of the shafting system shall be considered waterborne shafting. All shafting forward of this point shall be considered dry or line shafting.

4.4 Solid or hollow shafts. Unless otherwise specified, shafts with an outside diameter (*OD*) less than 6 inches shall be solid. Shafting 6 inches in diameter and above shall be bored hollow.

4.5 Hollow (bored) shafting. The inside diameter (*ID*) of bored shafting shall be 0.65 times the shaft nominal outside diameter (*OD*), unless specifically approved otherwise by NAVSEA. Where more than one design outside diameter exists within a shaft section, the 0.65 rule shall be based on the smaller outside diameter. Rounding off the inside diameter dimension to the nearest 1/8 inch is permitted. For controllable pitch propeller systems, the inside diameter shall not be decreased from forward to aft.

4.6 Shafts with multiple bores. For waterborne shafting, where different size inside diameters exist in a shafting section, calculated stresses shall be based on the largest inside diameter regardless of whether the largest inside diameter occurs at the location being examined.

4.7 Design nominal outside diameter of shafting. The design nominal outside diameter (*OD*) of shafting is the minimum diameter which is determined by calculations using the methods described herein meeting all the criteria specified.

4.8 Nominal outside diameter of waterborne shafting. The design nominal outside diameter (*OD*) of the waterborne shafting shall be determined on the basis of the maximum combined stresses that exist in the waterborne shafting. Stresses and factors of safety shall be calculated at all fillets, keyways, and other discontinuity points; at bearing support points defined in 4.11; and at locations of maximum moment peaks. Stress concentration factors (K_b and K_t) shall be applied as required to determine the point of maximum stress. Shaft sizes determined by these calculations shall meet the maximum bending stress (K_b x S_b) and minimum factor of safety criteria specified herein.

Table I. Mechanical properties of shafting and sleeve materials.

Material Specification	Density lb/in³	*E* x 10^6 Elastic Modulus lb/in²	*G* x 10^6 Shear Modulus lb/in²	*UT* Ultimate Tensile Strength lb/in²	*YP* Yield[1] Strength lb/in²	*FL* FATIGUE[2] LIMIT (in air) lb/in²
Steel, forged						
class 1 MIL-S-23284	0.284	29.5	11.75	95,000	75,000	47,500
class 2 MIL-S-23284	0.284	29.5	11.75	80,000	55,000	40,000
class 3 MIL-S-23284	0.284	29.5	11.75	75,000	45,000	34,000
class 4 MIL-S-23284	0.284	29.5	11.75	60,000	35,000	27,000
class 5 MIL-S-23284	0.284	29.5	11.75	105,000	75,000	47,500
K Monel, forged						
QQ-N-286 (UNS N05500)	0.305	26.0	9.50	140,000	100,000[3]	50,000
Nickel aluminum bronze, forged						
ASTM B150 alloy C63000	0.274	17.0	6.40	80,000	40,000[4]	26,000
Ni-Cr-Mo-Cb, alloy 625						
cast (centrifugally): MIL-C-24615	0.305	26.9	10.50	70,000	40,000[3]	20,000[5]
forged:	0.305	30.0	11.50	120,000	60,000[3]	51,000[5]
welded inlay MIL-E-22200 and MIL-E-22200/3 type MIL-IN12 MIL-E-21562 type MIL-EN625	0.305	25.0	9.60	110,000	60,000	25,000[6]
Copper-Nickel (70-30), cast ASTM B 369 alloy C96400	0.323	22.0	8.50	60,000	32,000[4]	13,000
CPP oil, 2190	0.031	0	0	0	0	0
Sand	0.064	0	0	0	0	0

[1] 0.10 percent offset
[2] At 10^8 cycles
[3] 0.20 percent offset
[4] 0.50 percent extension under load
[5] In seawater and air
[6] In seawater (also used for in-air)

4.9 Nominal outside diameter of line shafting and thrust shaft. The design nominal outside diameter (*OD*) of the line shafting and thrust shaft shall be determined on the basis of the maximum combined stresses that exist in the line shaft and thrust shaft, respectively. Stresses and factors of safety shall be calculated at all fillets, keyways, and other discontinuity points; at bearing support points; and at locations of maximum moment peaks. Stress concentration factors (K_b and K_t) shall be applied as required to determine the point of maximum stress. Shaft sizes determined by these calculations shall meet the minimum factor of safety criteria specified herein.

4.10 In-air and waterborne conditions. The stress analysis shall include a tabulation or graph(s) of bending moments for the shafting system for the straight-line condition in-air and for all applicable waterborne conditions as specified in 5.4.2.1.1. The requirements for maximum bending stress and minimum factor of safety specified herein shall be satisfied for both the in-air and waterborne conditions. For waterborne shafting, the product of the bending stress times the stress concentration factor (K_b x S_b) shall not exceed 6,000 lb/in^2 (12,000 lb/in^2 for *Ni-Cr-Mo-Cb* alloy 625).

4.11 Bearing support points. For design purposes the aftermost bearing shall be considered to act as a point support located at either one shaft design nominal outside diameter (*OD*) forward from the aft end of the bearing or at one-fourth of the bearing length forward from the aft end of the bearing, whichever is the greater. All other bearings shall each be considered to act as a point support at the bearing center.

4.12 Design torque. Propulsion shafting design shall allow for full power plus an additional torque imposed by the slowing of the propeller when the ship makes a turn at full power. Full power torque (*Q*) shall include other possible increases in torque that the propulsion shafting system may experience, such as those caused by allowable variations in full power shaft *RPM* as specified for the propeller or prime mover in a particular shipbuilding specification. The additional torque allowed for a ship making a turn at full power shall be 20 percent of full power torque for both single and multi-propeller ships, except that for ships with geared diesel engine propulsion, 10 percent (instead of 20 percent) additional torque shall be used. In addition, the design of shafting for ships driven by reciprocating engines shall be checked in accordance with MIL-STD-167-2 and NAVSEA 0900-LP-090-3020 for the torsional critical rotational speed at which vibratory stresses are greatest.

4.13 Steady and alternating stresses. When calculating stresses, the steady stresses and the alternating stresses shall be calculated separately. The resultant steady stress (S_{sr}) is due to the steady torque and thrust. The resultant alternating stress (S_{ar}) is due to the alternating torque and bending (including bending due to off-center thrust for waterborne shafting). The effects from other sources of bending in a particular shafting design, such as dental or sound isolation couplings, shall also be included in the calculations. Stress concentration factors (K_b and K_t), where they exist, shall be applied to the alternating torsional shear (S_{as}) and bending stresses (S_b).

4.14 High localized stresses. High localized stresses shall be avoided by use of generous fillets and by avoiding the drilling of holes into the shafting to secure such items as keys, sleeves, and oil baffles. For the same

responses shall be calculated for peak values at all speeds for both the straight course and the maximum-rudder (full turns to port and starboard) conditions. MIL-STS-167-2 provides the operational factors for propeller excitation for peak straight-course and maximum-rudder conditions throughout the operating speed range for surface ships. Although these operational factors are defined in the longitudinal vibration section of MIL-STD-167-2, they may be applied to propeller excited torsional vibration responses as well. Detailed propeller excitation data, including these operational factors, usually become available for each ship design during contract design.

(c) Lateral vibration analyses shall allow for the stiffnesses of the bearing supports, including struts and other structures, as appropriate.

4.17 Gravity moments. The shafting alignment analysis shall be used to determine the gravity moment (M_g) at any location along the shafting length. In addition, a separate detailed gravity moment calculation shall be provided (with an accompanying sketch) at the point support at the aftermost bearing (defined in 4.11), in air, to verify the moment obtained by the alignment analysis at this critical design point.

4.18 Shaft bore components. Determination of gravity moments (M_g) in shafting shall take into account the weight distribution of internal components in the bore. These components include, as applicable, such items as piping, control rods, oil, and sand.

4.19 Bending stresses and moments for waterborne shafting. The bending stresses (S_b) determined at all locations for waterborne shafting shall be based on the combined moments of gravity (M_g) and off-center thrust (M_{oc}) (see Table II). For the straight-line in-air condition, the moment due to off-center thrust shall be based on the overhung bending moment (M_p) due to the weight of the propeller assembly and shafting components in air at the point support of the aftermost bearing defined in 4.11. For waterborne conditions, the moment due to off-center thrust shall be based on the overhung bending moment due to the weight of the propeller assembly and shafting components in water at the point support of the aftermost bearing previously defined. The off-center moment shall be considered a constant value acting along the entire length of waterborne shafting and always additive to the gravity bending moment.

4.20 Shaft bending stress limit. In no case shall the product of bending stress and stress concentration factor (K_b x S_b) exceed 6,000 lb/in^2 for steel waterborne shaft material or 12,000 lb/in^2 for *Ni-Cr-Mo-Cb* alloy 625 clad weld material.

4.21 Factors of safety. Propulsion shafting designs shall meet the factors of safety tabulated in Table III.

4.22 Treatment of clad weld inlays. Shafting section areas that have been designed with a clad weld inlay, such as the aftermost shaft flange fillet for controllable pitch propeller installations, shall be treated as nonhomogeneous. When analyzing these areas of shafting, stresses and factors of safety shall be calculated at the outer surface of the clad weld inlay and at the interface of the clad weld inlay and shaft base material (see 5.5).

4.23 Submarine shaft sleeve groove - resultant alternating stress limit. This limit will depend on the material used (see 5.6.1).

4.24 Propeller nut shaft threads undercut. For shafting systems using a hydraulic propeller nut for installation of the propeller, the tensile stress at the undercut of the propeller nut shaft threads shall be determined. The factor of safety, based on the ultimate tensile strength from Table I, shall be equal to or greater than the minimum waterborne shafting factor of safety.

Table II. Bending moments for surface ships and submarines.[1/]

	Surface Ships		Submarines
	Strut-supported shafting	Nonstrut-supported shafting	
Off-center thrust moment for waterborne shafting (M_{oc}) =	M_p	$2M_p$	0
Total moment at aftermost bearing support point $(M_T = M_p + M_{oc})$ =	$2M_p$	$3M_p$	M_p
Total moment at any point of waterborne shafting $(M_T = M_g + M_{oc})$ =	$M_g + M_p$	$M_g + 2M_p$	M_g
Total moment at any point of line shafting (M_T) =	M_g	M_g	M_g

[1/] Where applicable, the total moment (M_T) shall also include bending moments due to ther sources, such as dental couplings or sound isolation couplings.

Table III. Factors of safety for propulsion shafting.

	Type of Ship		
	Surface ships other than Icebreakers	Icebreakers	Submarines
Waterborne shafting	2.00	3.50	2.25
Line shafting	1.75	2.25	2.00

5. DETAILED REQUIREMENTS

5.1 Design loads. Propulsion shafting is subjected to a variety of steady and alternating loads that include torsional shear, axial thrust, and bending. In the detail shaft design analysis, stresses shall be calculated at all bearing support points, shafting discontinuities, flange fillets, keyways, moment peaks, and all other areas where high stresses may occur.

5.2 Stresses. Steady and alternating stresses shall be analyzed separately, then combined using equations based on the Soderberg diagram to determine factors of safety. For proper shaft inside diameter to use in equations, see 4.6.

5.3 Clad weld inlay. Shafting section areas that have been designed with a clad weld inlay shall be treated as nonhomogeneous and shall be analyzed using the equations in 5.5. All other shaft sections shall be analyzed in accordance with 5.4.

5.4 Shafting design equations.

5.4.1 Steady stresses.

5.4.1.1 Torsional load. The torsional load in the shafting, which results in steady torsional stresses, is calculated from the full shaft horsepower output (*SHP*) and propeller rotational speed (*RPM*) as follows:

$$Q = \frac{63{,}025 \times SHP}{RPM} \qquad \text{(Eq-1)}$$

5.4.1.1.1 Additional torque for full power turns. Additional torque shall be required for full power turns (see 4.12).

(a) For turbine-driven ships, whether single- or multi-shaft:

$$Q_T = 1.2 \times Q \qquad \text{(Eq-2a)}$$

(b) For reciprocating-engine-driven shafts, whether diesel or steam, single- or multi-shaft:

$$Q_T = 1.1 \times Q \qquad \text{(Eq-2b)}$$

5.4.1.2 Steady shear stress. (Eq-3a) through (Eq-3c) apply for the calculation of steady shear stress.

$$S_s = \frac{Q_T \times OD}{2 \times J} \qquad \text{(Eq-3a)}$$

$$= \frac{5.1 \times Q_T \times OD}{OD^4 - ID^4} \quad \text{(Hollow shaft)} \qquad \text{(Eq-3b)}$$

$$= \frac{5.1 \times Q_T}{OD^3} \quad \text{(Solid shaft)} \qquad \text{(Eq-3c)}$$

5.4.1.3 Thrust load. Thrust loads shall be calculated for surface ships and submarines as specified in 5.4.1.3.1 and 5.4.1.3.2, respectively.

5.4.1.3.1 Surface ships.

$$T_T = \frac{325.87 \times EHP}{V \times (1 - t)} \qquad \text{(Eq-4a)}$$

where:

$$EHP = SHP \times PC \qquad \text{(Eq-4b)}$$

For preliminary calculations, or in the absence of model test data, it may be assumed that $t = 0.15$ and $PC = 0.65$.

5.4.1.3.2 Submarines. Aft of the thrust collar, propulsive thrust and submergence thrust shall be calculated as specified in (a) through (e) below. Forward of the thrust collar, propulsive thrust, submergence thrust, and total thrust are zero.

(a) Propulsive thrust.

$$T = \frac{325.87 \times EHP}{V \times (1 - t)} \qquad \text{(Eq-5)}$$

where:

$$EHP = SHP \times PC$$

(b) Submergence thrust aft of the main shaft seal.

$$T_{S1} = 0.44444 \times A_{S1} \times depth \qquad \text{(Eq-6a)}$$

where *depth* equals test depth in feet.

(c) Submergence thrust between main shaft seal and thrust collar.

$$T_{S2} = 0.44444 \times A_{S2} \times depth \qquad \text{(Eq-6b)}$$

where *depth* equals test depth in feet.

(d) Total thrust aft of main shaft seal.

$$T_T = T + T_{S1} \qquad \text{(Eq-7a)}$$

(e) Total thrust between main shaft seal and thrust collar.

$$T_T = T + T_{S2} \qquad \text{(Eq-7b)}$$

5.4.1.4 Steady compressive stress. (Eq-8) applies for calculation of the steady compressive stress due to thrust.

$$S_C = \frac{T_T}{A} = \frac{1.273 \times T_T}{OD^2 - ID^2} \qquad \text{(Eq-8)}$$

5.4.1.5 Resultant steady stress. (Eq-9) applies for calculation of the resultant steady stress.

$$S_{sr} = [S_C^2 + (2 \times S_S)^2]^{1/2} \qquad \text{(Eq-9)}$$

5.4.2 Alternating stresses.

5.4.2.1 Bending moments.

5.4.2.1.1 Gravity bending moments.

(a) For preliminary design purposes the gravity bending moment in a span of line shafting with bearings spaced at distance L_b apart may be approximated by (Eq-10).

$$M_g = \frac{w \times L_b^2}{12} \qquad \text{(Eq-10)}$$

(b) The shaft alignment analysis shall be used to determine the gravity bending moments (M_g) that exist at each design point (see 4.8 and 4.9) of the propulsion shafting system for the following conditions:

(1) Straight line in air.

(2) Aligned waterborne with machinery cold.

(3) Aligned waterborne with machinery cold and with collective weardown of water lubricated bearings.

(4) Aligned waterborne with machinery at operating temperature.

(5) Aligned waterborne with machinery at operating temperature and with collective weardown of water lubricated bearings.

(6) Aligned waterborne with allowable variations of bearings loads for conditions (2) through (5) above.

(7) For submarines only, hull deflections due to diving, rising, sea slap, and submergence pressure shall be analyzed in combination with conditions (2) through (6) above.

(8) For surface ships only, hull deflections that affect shaft alignment shall be analyzed in combination with conditions (2) through (6) above. These hull deflections are usually the result of large changes in ballast such as those seen on fleet oilers, amphibious-force ships, or supply ships. Hull deflections due to sea state and steering turns need not be analyzed.

The shaft stress analysis shall include a tabulation or graph(s) of these bending moments.

(c) The maximum gravity bending moment determined at each design point shall then be used when calculating shaft stresses at that point.

5.4.2.1.2 Off-center moment - waterborne shafting only (see 4.19). The eccentricity of the propeller thrust produces a significant propeller shaft

off-center bending moment (M_{oc}) which is additive to the gravity moment. For design purposes, the off-center moment shall be assumed constant at all locations of waterborne shafting and zero at all locations of line shafting. Off-center and total bending moments for strut- and nonstrut-supported shafting systems are listed in Table II.

5.4.2.2 Stress concentration factors. The principal points of stress concentration in shafting occur at the corners of keyways, at flange fillets, and at holes (where specifically approved) drilled in the shaft. These points of stress concentration shall be treated as specified in 5.4.2.2.1 through 5.4.2.2.3.

5.4.2.2.1 Stress concentration at keyway fillets. The stress concentration factor for torsional stress (K_t) at keyway fillets is a function of the ratio of the fillet radius in the corner of the keyway (r_k) to the depth of the keyway at midlength (H). Values of K_t shall be taken from Figure 1. The fillet radius shall be in accordance with Navships Dwg No. 803-2145807. The stress concentration factor in bending due to a keyway is unity, and the stress concentration can be neglected at the key end provided that the ends of the keyway are properly faired into the shaft in accordance with Navships Dwg No. 803-2145807.

5.4.2.2.2 Stress concentration at flange fillets. The stress concentration factors for alternating torsional and bending stresses (K_t and K_b respectively) at the fillet of a coupling flange or propeller shaft aft flange depend on the fillet radius (r_f or r_{pf}), the shaft design nominal outside diameter (OD), and the flange outside diameter (D_f or D_{pf}). Values for K_t and K_b shall be taken from Figures 2 and 3 respectively.

5.4.2.2.3 Oil holes in shafting. Oil holes drilled normal to the surface of a shaft usually have a diameter that is small with respect to the shaft diameter. A stress concentration factor of three for the bending stress shall be used. Note that the drilling of these types of holes in propulsion shafting is prohibited except where specifically approved by NAVSEA.

5.4.2.3 Bending stress. (Eq-11a) through (Eq-11c) apply for the calculation of bending stress due to bending moment.

$$S_b = \frac{M_T \times OD}{2 \times I} \qquad \text{(Eq-11a)}$$

$$S_b = \frac{10.2 \times M_T \times OD}{OD^4 - ID^4} \quad \text{(Hollow shaft)} \qquad \text{(Eq-11b)}$$

$$S_b = \frac{10.2 \times M_T}{OD^3} \quad \text{(Solid shaft)} \qquad \text{(Eq-11c)}$$

For waterborne shafting, the product of the bending stress and the stress concentration factor (S_b x K_b) shall not exceed 6,000 lb/in^2.

5.4.2.4 Alternating (vibratory) torsional shear stress. Alternating torsional shear stresses in the shaft are generated by the propeller and occur predominantly at blade frequency, except for diesel propulsion plants, where the cyclic engine torque is significant also.

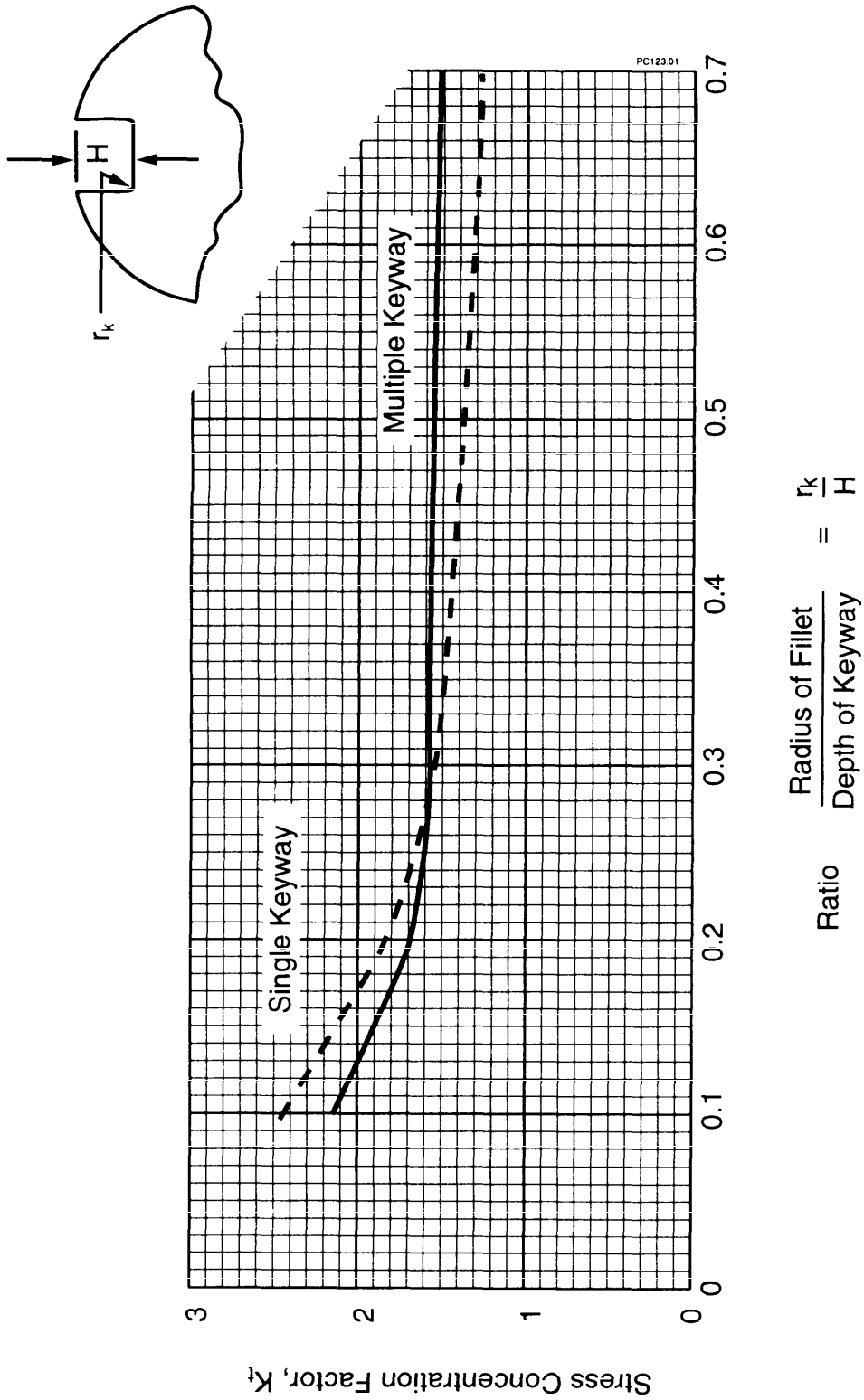

Figure 1. Stress Concentration Factors at Keyway Fillets, in Torsion

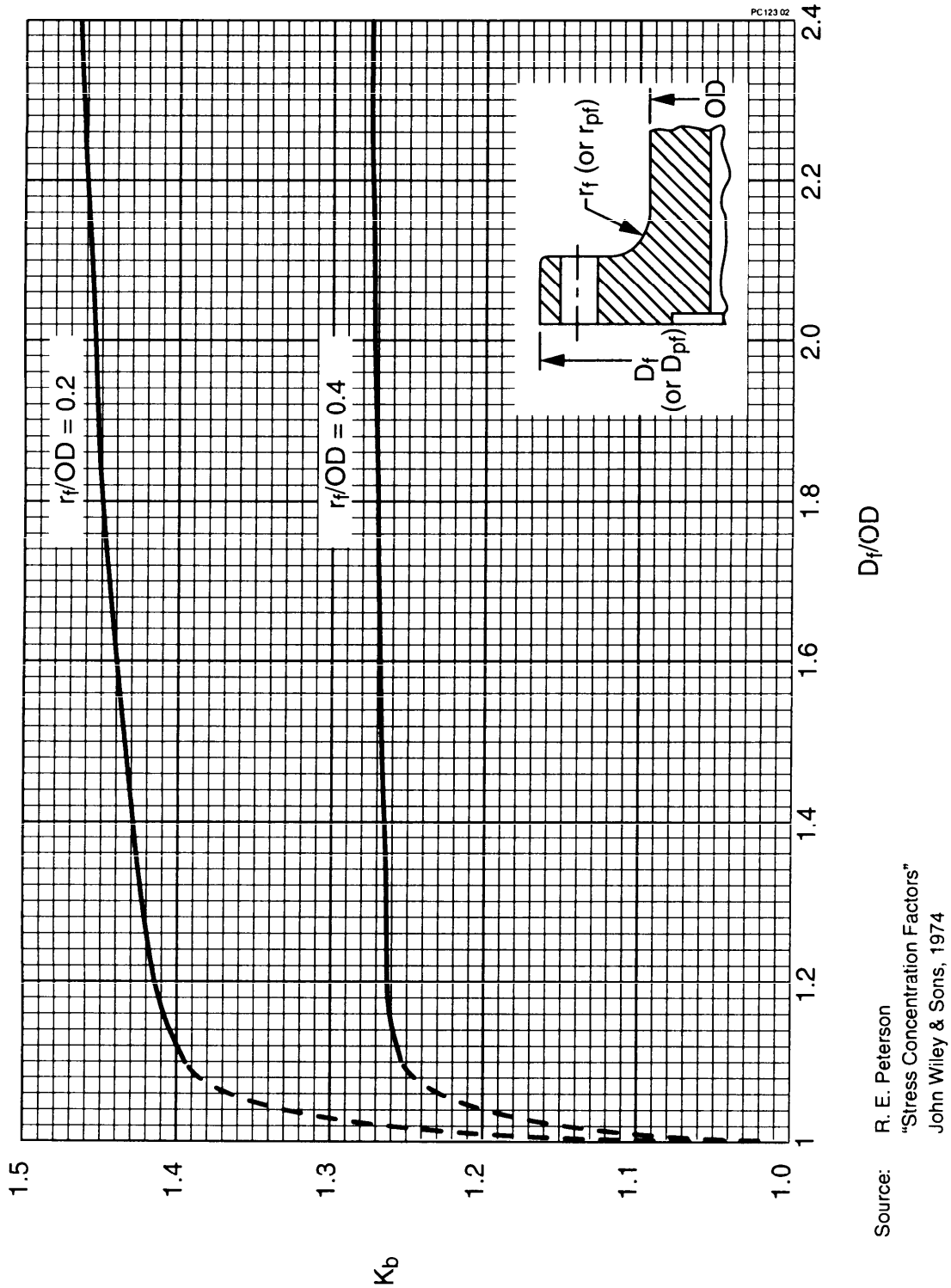

Source: R. E. Peterson
"Stress Concentration Factors"
John Wiley & Sons, 1974

Figure 2. Stress Concentration Factor, K_b, for Bending at Flange Fillet

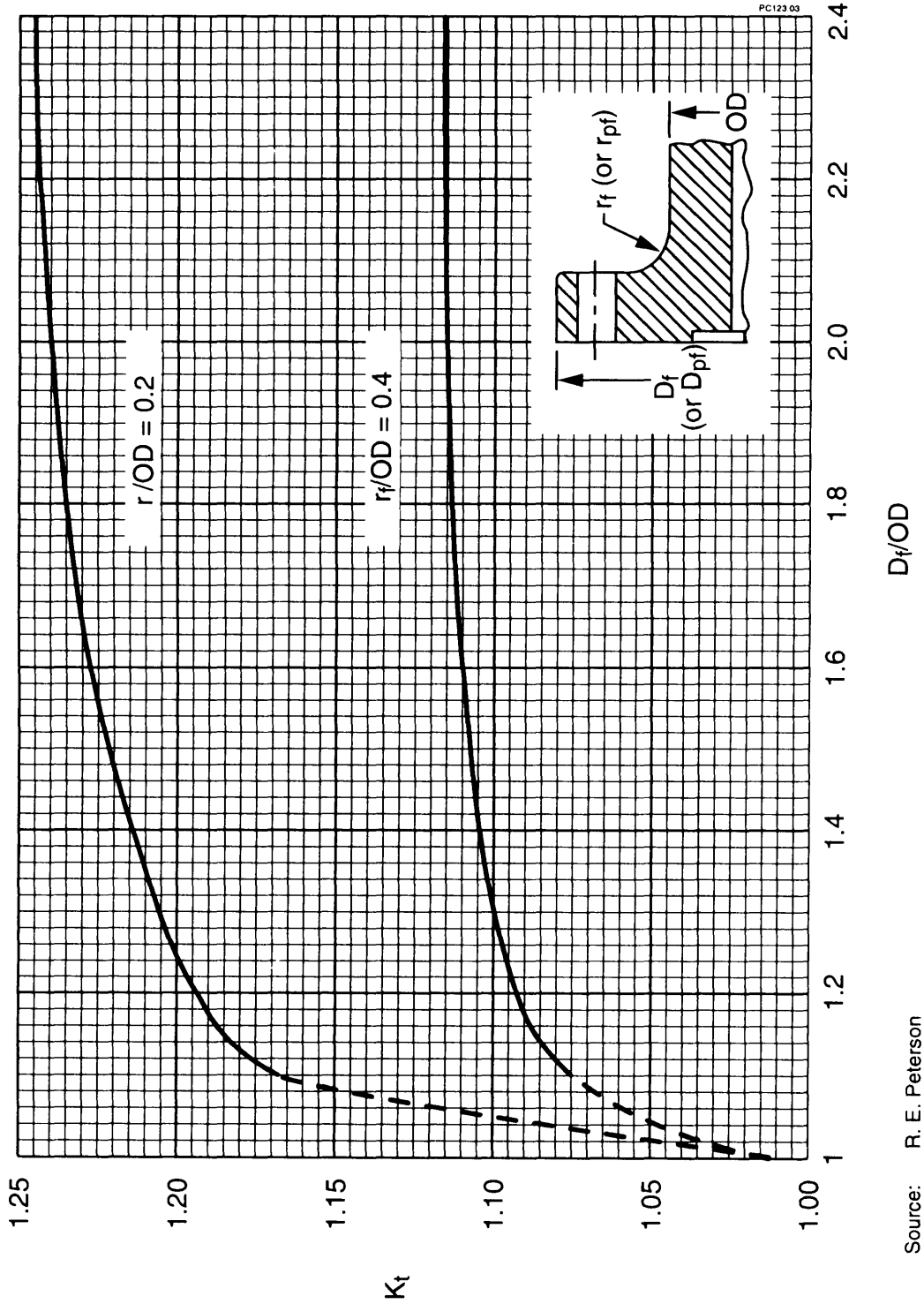

Source: R. E. Peterson
"Stress Concentration Factors"
John Wiley & Sons, 1974

Figure 3. Stress Concentration Factor, K_t, for Torsion at Flange Fillet

Initially the alternating torsional shear stress may be approximated as follows:

$$S_{as} = 0.05 \times S_s \qquad \text{(Eq-12)}$$

where:

S_s = steady shear stress as derived from (Eq-3b) or (Eq-3c).

Instead of the above, the values determined by the detailed propulsion system vibration analysis shall be substituted in the design calculations if they are larger at the corresponding shaft *RPM* than the approximation given by (Eq-12).

5.4.2.5 Resultant alternating stress. The resultant alternating stress shall be found, first by multiplying the bending and torsional stress components each by the appropriate stress concentration factor, and then by combining them as prescribed in the maximum shear theory as follows:

$$S_{ar} = [(K_b \times S_b)^2 + (2 \times K_t \times S_{as})^2]^{1/2} \qquad \text{(Eq-13)}$$

where:

K_b and K_t are stress concentration factors for bending and torsion respectively (see Figures 1, 2, and 3) at shafting discontinuities such as flange fillets and keyways (see 5.4.2.2).

5.4.3 Factor of safety. The resultant steady stress (S_{sr}) and the resultant alternating stress (S_{ar}) are used to obtain the factor of safety as follows:

$$\frac{1}{FS} = \frac{S_{sr}}{YP} + \frac{S_{ar}}{FL} \qquad \text{(Eq-14a)}$$

-or-

$$FS = \frac{1}{\frac{S_{sr}}{YP} + \frac{S_{ar}}{FL}} \qquad \text{(Eq-14b)}$$

Values for *YP* and *FL* shall be obtained from Table I.

5.5 Shafts with clad weld inlay. Shafting section areas that have a clad weld inlay shall be treated as nonhomogeneous (See 4.22).

5.5.1 Steady stresses.

5.5.1.1 Torsional load. The torsional load (Q_T) for shafting with clad weld inlay is calculated using (Eq-1) and (Eq-2a) or (Eq-2b).

5.5.1.2 Steady shear stress. The calculation of steady shear stress shall account for the clad weld inlay and shaft base material as shown in (Eq-15a) through (Eq-16b).

(a) Steady shear stress at outer surface of clad weld inlay.

$$S_{si} = \frac{Q_T \times OD_i \times G_i}{2 \times [(J_i \times G_i) + (J_b \times G_b)]} \qquad \text{(Eq-15a)}$$

(b) Steady shear stress at interface of clad weld inlay and shaft base material.

$$S_{sb} = \frac{Q_T \times OD_b \times G_b}{2 \times [(J_i \times G_i) + (J_b \times G_b)]} \qquad \text{(Eq-15b)}$$

where:

$$J_i = \frac{\pi \times (OD_i^4 - OD_b^4)}{32} \qquad \text{(Eq-16a)}$$

$$J_b = \frac{\pi \times (OD_b^4 - ID^4)}{32} \qquad \text{(Eq-16b)}$$

5.5.1.3 Thrust load. The thrust load (T_T) for shafting with clad weld inlay is calculated using (Eq-4a) through (Eq-7b) in 5.4.1.3.

5.5.1.4 Steady compressive stress. The calculation of steady compressive stress shall account for the clad weld inlay and shaft base material as shown in (Eq-17a) through (Eq-17b).

(a) Steady compressive stress at outer surface of clad weld inlay.

$$S_{ci} = \frac{T_T \times E_i}{[(A_i \times E_i) + (A_b \times E_b)]} \qquad \text{(Eq-17a)}$$

(b) Steady compressive stress at interface of clad weld inlay and shaft base material.

$$S_{cb} = \frac{T_T \times E_b}{[(A_i \times E_i) + (A_b \times E_b)]} \qquad \text{(Eq-17b)}$$

5.5.1.5 Resultant steady stress. The calculation of resultant steady stress shall account for the clad weld inlay and shaft base material as shown in (Eq-18a) and (Eq-18b).

(a) Resultant steady stress at outer surface of clad weld inlay.

$$S_{sri} = [S_{ci}^2 + (2 \times S_{si})^2]^{1/2} \qquad \text{(Eq-18a)}$$

(b) Resultant steady stress at interface of clad weld inlay and shaft base material.

$$S_{srb} = [S_{cb}^2 + (2 \times S_{sb})^2]^{1/2} \qquad \text{(Eq-18b)}$$

5.5.2 Alternating stresses.

5.5.2.1 Bending moments. The calculation of bending moments for shafting with clad weld inlay shall follow the same criteria given in 5.4.2.1.

5.5.2.2 Stress concentration factors. For shafts with a clad weld inlay, the stress concentration factors (K_b and K_t) shall be determined using Figures 1, 2 and 3.

5.5.2.3 Bending stress. The calculation of bending stress shall account for the clad weld inlay and shaft base material as shown in (Eq-19a) through (Eq-20b).

(a) Bending stress at outer surface of clad weld inlay.

$$S_{bi} = \frac{M_T \times OD_i \times E_i}{2 \times [(E_i \times I_i) + (E_b \times I_b)]} \qquad \text{(Eq-19a)}$$

For waterborne shafting, the product of the bending stress at the weld inlay and the stress concentration factor in bending (K_b x S_{bi}) shall not exceed 12,000 lb/in^2.

(b) Bending stress at interface of clad weld inlay and shaft base material.

$$S_{bb} = \frac{M_T \times OD_b \times E_b}{2 \times [(E_i \times I_i) + (E_b \times I_b)]} \qquad \text{(Eq-19b)}$$

For waterborne shafting, the product of bending stress at this interface and the stress concentration factor in bending (K_b x S_{bb}) shall not exceed 6,000 lb/in^2.

(c) Calculation of moments of inertia for shaft base material (I_b) and for clad weld inlay material (I_i).

$$I_i = \frac{\pi \times (OD_i^4 - OD_b^4)}{64} \qquad \text{(Eq-20a)}$$

$$I_b = \frac{\pi \times (OD_b^4 - ID^4)}{64} \qquad \text{(Eq-20b)}$$

5.5.2.4 Alternating (vibratory) torsional shear stress. Initially, the alternating torsional shear stress may be approximated at the clad weld inlay and shaft base material as shown in (Eq-21a) and (Eq-21b).

(a) Alternating torsional shear stress at outer surface of clad weld inlay.

$$S_{asi} = 0.05 \times S_{si} \qquad \text{(Eq-21a)}$$

where:

S_{si} = steady shear stress as derived from (Eq-15a).

(b) Alternating torsional shear stress at interface of clad weld inlay and shaft base material.

$$S_{asb} = 0.05 \times S_{sb} \qquad \text{(Eq-21b)}$$

where:

S_{sb} = steady shear stress as derived from (Eq-15b).

Instead of the above, values determined by the detailed propulsion system vibration analysis shall be substituted in the design calculations if they are larger at the corresponding shaft *RPM* than the approximations given by (Eq-21a) and (Eq-21b).

5.5.2.5 Resultant alternating stress. The calculation of resultant alternating stress shall account for the clad weld inlay and shaft base material as shown in (Eq-22a) and (Eq-22b).

(a) Resultant alternating stress at outer surface of clad weld inlay.

$$S_{ari} = [(K_b \times S_{bi})^2 + (2 \times K_t \times S_{asi})^2]^{1/2} \qquad \text{(Eq-22a)}$$

(b) Resultant alternating stress at interface of clad weld inlay and shaft base material.

$$S_{arb} = [(K_b \times S_{bb})^2 + (2 \times K_t \times S_{asb})^2]^{1/2} \qquad \text{(Eq-22b)}$$

5.5.3 Factor of safety. The calculation of factor of safety shall account for the clad weld inlay and shaft base material as shown in (Eq-23a) and (Eq-23b).

(a) Factor of safety at outer surface of clad weld inlay.

$$FS_i = \frac{1}{\frac{S_{sri}}{YP_i} + \frac{S_{ari}}{FL_i}} \qquad \text{(Eq-23a)}$$

(b) Factor of safety at interface of clad weld inlay and shaft base material.

$$FS_b = \frac{1}{\frac{S_{srb}}{YP_b} + \frac{S_{arb}}{FL_b}} \qquad \text{(Eq-23b)}$$

Values for YP_b, YP_i, FL_b, and FL_i shall be obtained from Table I.

5.6 Shafting components. Shafting components shall be as specified in 5.6.1 through 5.6.4.

5.6.1 Submarine sleeve at main shaft seal. The stresses in the sleeve groove in way of the submarine main shaft seal sleeve shall meet the criterion that the resultant alternating stress in the sleeve groove (S_{arg}) shall be less than or equal to the following:

Sleeve Material	Maximum allowable stress(lb/in^2)
Cu-Ni (70-30)	1,500
Ni-Cr-Mo-Cb alloy 625	
Forged	6,400
Cast	2,650

5.6.1.1 Resultant alternating stress. The resultant alternating stress in the sleeve groove in way of the main shaft seal sleeve shall be calculated by (Eq-24) through (Eq-28).

(a) The alternating bending stress at the sleeve groove is based on a nonhomogeneous beam solution:

$$S_{bg} = \frac{M_T \times E_{sl} \times D_{gr}}{2 \times [(E_{sl} \times I_{gr}) + (E \times I)]} \qquad \text{(Eq-24)}$$

where:

$$I_{gr} = \frac{\pi \times (D_{gr}^4 - OD^4)}{64} \qquad \text{(Eq-25a)}$$

$$I = \frac{\pi \times (OD^4 - ID^4)}{64} \qquad \text{(Eq-25b)}$$

(b) The alternating shear stress at the sleeve groove is based on a nonhomogeneous beam solution in a manner like that of (Eq-24).

$$S_{asg} = \frac{0.05 \times Q_T \times G_{sl} \times D_{gr}}{2 \times [(G_{sl} \times J_{gr}) + (G \times J)]} \qquad \text{(Eq-26)}$$

where:

$$J_{gr} = 2 \times I_{gr} \qquad \text{(Eq-27a)}$$

$$J = 2 \times I \qquad \text{(Eq-27b)}$$

(c) The resultant alternating stress at the sleeve groove is determined from the relationship:

$$S_{arg} = [(K_b \times S_{bg})^2 + (2 \times K_t \times S_{asg})^2]^{1/2} \qquad \text{(Eq-28)}$$

Values for the stress concentration factors for the fillet at the base of the groove in bending (K_b) and torsion (K_t) shall be obtained from Peterson, Figures 49 and 55.

Note: *Cu-Ni* (70-30) and cast *Ni-Cr-Mo-Cb* alloy 625 are not notch sensitive. Therefore, for these materials, the stress concentration factors in bending (K_b) and torsion (K_t) are equal to 1.00.

5.6.2 Key and keyway design. The allowable design key stresses (S_{sk} and S_{ck}) are based, respectively, on the yield strength in shear and ultimate compressive strength of the key material, and on a factor of safety of five. Values for S_{sk} and S_{ck} to be used in (Eq-30) and (Eq-31) are given in Tables IV and V respectively.

5.6.2.1 Nomenclature. Symbols of special use in key and keyway design are listed here with their intended meanings: (also see Figures 4 and 5)

B_e	= Effective length of key (Eq-29a or 29b)	inches
b_1	= Contact depth of keyway [depth of keyway (H) minus key chamfer (C_h)]	inches

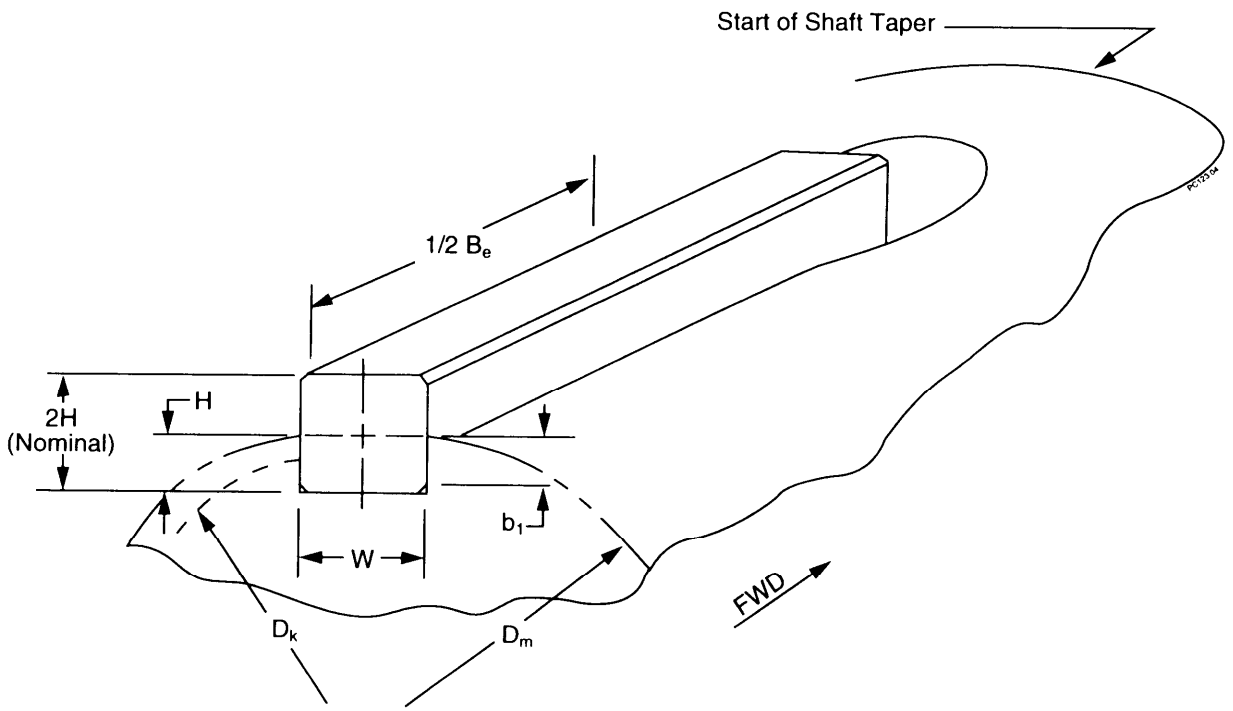

Figure 4. Propeller Key

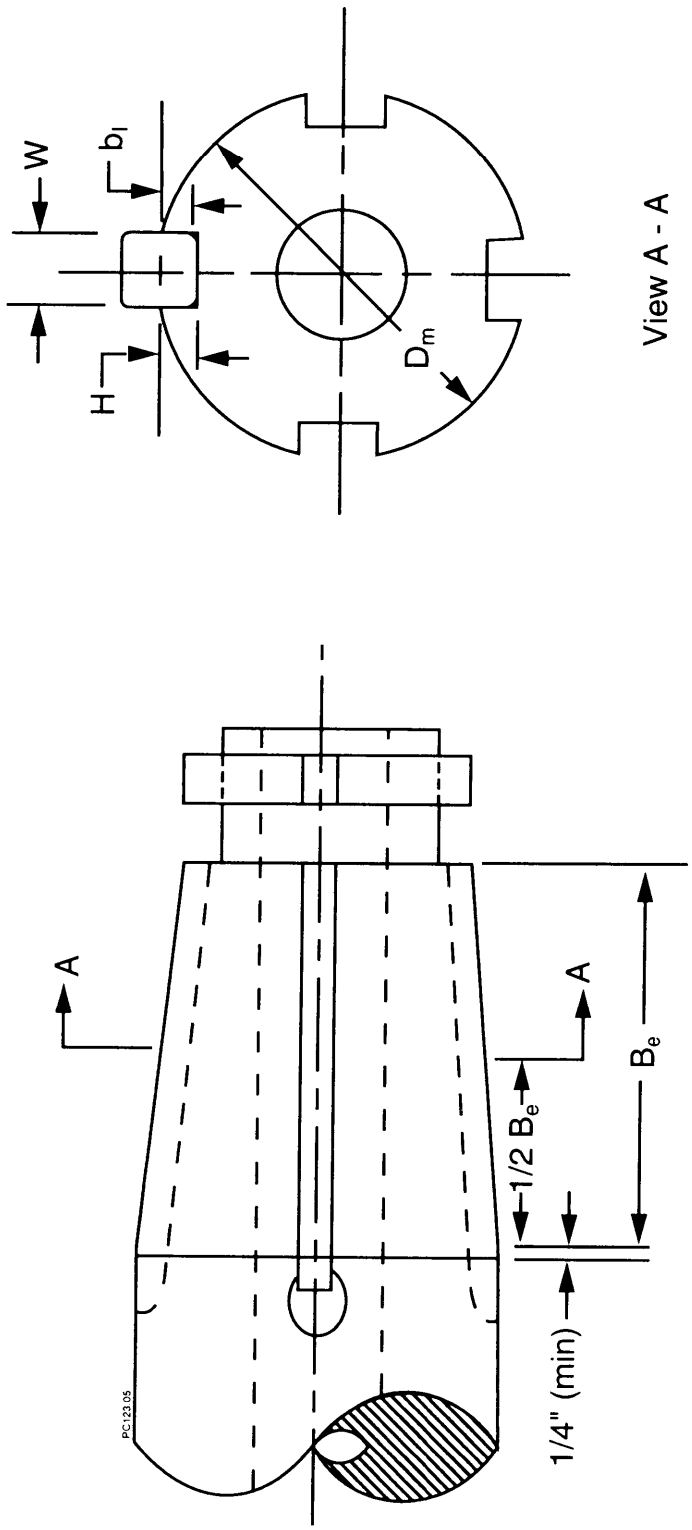

Figure 5. Inboard Coupling Key

D_k	= Diameter at midpoint of contact depth (b_1) at midlength of B_e	inches
D_m	= Diameter of shaft taper at midlength of B_e	inches
H	= Depth of keyway at midlength of B_e (straight side plus corner radius)	inches
L_t	= Length of shaft taper	inches
N_1	= Number of keys	
S_{ck}	= Allowable compressive stress of key	lb/in^2
S_{sk}	= Allowable shearing stress of key	lb/in^2
W	= Width of key	inches

5.6.2.2 Design formulas. (See (Eq-29a) through (Eq-31).)

$$B_e = L_t - (8 \times H), \text{ for propeller key} \quad \text{(Eq-29a)}$$

$$B_e = L_t - 0.25 \text{ inch, for inboard coupling key} \quad \text{(Eq-29b)}$$

$$W \text{ (min)} = \frac{2 \times Q_T}{N_1 \times B_e \times D_m \times S_{sk}} \quad \text{(Eq-30)}$$

$$b_1 \text{ (min)} = \frac{2 \times Q_T}{N_1 \times B_e \times D_k \times S_{ck}} \quad \text{(Eq-31)}$$

Table IV. Allowable shearing stress for key materials.

Material	Material Spec	S_{sk} Allowable shearing stress, (lb/in^2)	
		1 key	2 or more keys
Steel			
class 1	MIL-S-23284	11,250	7,500
class 2	MIL-S-23284	8,250	5,500
class 3	MIL-S-23284	6,750	4,500
class 4	MIL-S-23284	5,250	3,500
Ni-Cu (monel)	QQ-N-281	7,800	5,200
Ni-Cu-Al (K-monel)	QQ-N-286	15,000	10,000
Nickel aluminum bronze	ASTM B150 Alloy C63000	6,000	4,000
Manganese bronze half-hard, rolled	ASTM B138	5,250	3,500
Steel, class C type I or II	MIL-S-24093	15,000	10,000

Table V. Allowable compressive stress for key materials.

Material	Material Spec	S_{ck} Allowable compressive stress, (lb/in²)	
		1 key	2 or more keys
Steel			
class 1	MIL-S-23284	28,500	19,000
class 2	MIL-S-23284	24,000	16,000
class 3	MIL-S-23284	22,500	15,000
class 4	MIL-S-23284	18,000	12,000
Ni-Cu (monel)	QQ-N-281	27,000	18,000
Ni-Cu-Al (K-monel)	QQ-N-286	42,000	28,000
Nickel aluminum bronze	ASTM B150 Alloy C63000	24,000	16,000
Manganese bronze half-hard, rolled	ASTM B138	19,500	13,000
Steel, class C type I or II	MIL-S-24093	36,000	24,000

5.6.3 Shaft coupling bolts. Shear stress of propulsion shaft coupling bolts shall be calculated as follows:

$$S_{bt} = \frac{2 \times Q_T}{N_b \times A_{bt} \times D_{bc}} \qquad \text{(Eq-32)}$$

where:

S_{bt}	= shear stress of shaft coupling bolts	lb/in²
Q_T	= the total torque including all increases required	lb-in
N_b	= number of bolts	
A_{bt}	= bolt cross-sectional area at parting surface	in²
D_{bc}	= bolt circle diameter	inches

The maximum allowable shear stress for coupling bolts shall be determined based on the yield strength of the bolt material and a minimum factor of safety equal to that of the shafting being coupled, but not less than 2.00. Accordingly, using the maximum shear theory, the maximum allowable shear stress for steel (MIL-S-24093) coupling bolts on a typical surface ship is 25,000 lb/in².

5.6.4 Propeller nut shaft threads undercut tensile stress. If a hydraulic or conventional propeller nut is used for the installation of a propeller, the tensile stress and factor of safety at the undercut of the propeller nut shaft threads shall be calculated:

$$S_T = \frac{F_T}{A_U} = \frac{1.273 \times F_T}{D_U^2 - d^2} \qquad \text{(Eq-33a)}$$

$$FS_U = \frac{UT}{S_T} \qquad \text{(Eq-33b)}$$

The factor of safety at the shaft thread undercut shall be equal to or greater than 1.5.

5.7 Design examples. Illustrative numerical solutions for the following two propulsion shafting systems are presented in Appendices A and B.

(a) Submarine shafting system. (See Appendix A.)

(b) Surface ship controllable pitch propeller shafting system. (See Appendix B.)

6. NOTES

(This section contains information of a general or explanatory nature that may be helpful but is not mandatory).

6.1 Intended use. This standard is intended for use in designing safe, workable propulsion shafting for naval ships, both surface and submarine.

6.2 Issue of DODISS. When this standard is used in acquisition, the applicable issue of the DODISS must be cited in the solicitation (see 2.1.1 and 2.2).

6.3 Conventions of arithmetic in numerical examples. In the numerical computations in the Appendices, the following conventional rules are observed:

(a) Five significant figures are carried within the computation, with answers rounded as appropriate.

(b) Quantities given by hypothesis are assumed to be exact, regardless of the number of figures to which expressed.

(c) Quantities taken from graphs are assumed to be correct to three significant figures.

(d) The ratio of circumference to diameter, pi, to five figures, is 3.1416; one-quarter pi, also to five figures, is 0.78540; and one-twelfth pi, 0.26180. (All three of these approximations err on the large side.)

(e) The variation of sea pressure with depth is assumed to be linear at 0.44444 lb/in^2 per foot.

6.4 Subject term (key word) listing.

clay weld
cross-sectional
fatigue limit
surface ships
submarines
propeller

Preparing activity:
NAVY - SH
(Project GDRQ-N073)

APPENDIX A

SAMPLE CALCULATIONS, SUBMARINE SHAFTING SYSTEM

10. SCOPE

10.1 Scope. Sample calculations for checking the adequacy of the diameters of shafting in the propulsion shafting system of a hypothetical single propeller submarine are presented in this Appendix. This Appendix is not a mandatory part of the standard. The information contained herein is intended for guidance only.

20. APPLICABLE DOCUMENTS. This section is not applicable to this Appendix.

30. NUMERICAL EXAMPLE.

30.1 Example requirement. It is required to check the diameters of a given submarine shafting system (see Figure 6) against the criteria of this military standard.

30.1.1 Ship information. Shafting and propeller data are as follows:

General Information

		Coupling bolt material	= MIL-S-24093
		Depth	= 350 feet
		Drive	= Steam turbine
		Key Material	= MIL-S-24093
		Seal ring diameter	= 23.00 inches
PC	=	Propulsive coefficient	= 0.65
RPM	=	Propeller rotational speed	= 155 r/min
SHP	=	Shaft horsepower	= 14,000 hp
t	=	Thrust deduction factor	= 0.15
V	=	Ship speed at full power	= 17 knots
W_c	=	Weight of propeller cap in air	= 2,000 lbs
W_p	=	Weight of propeller in air	= 17,000 lbs
		Propeller CG (from fwd face of hub)	= 26.375 inches
		Propeller cap CG (from aft face of hub)	= 12.00 inches

Line shaft

		Material	= MIL-S-23284, class 1
D_f	=	Outside diameter of flange	= 24.00 inches
D_{tc}	=	Diameter of thrust collar	= 40.00 inches
FL	=	Fatigue limit	= 47,500 lb/in^2
ID	=	Shaft inside diameter	= 10.00 inches
OD	=	Shaft outside diameter	= 15.00 inches
r_f	=	Radius of flange fillet	= 3.00 inches
r_{tc}	=	Radius of thrust collar fillet	= 3.00 inches
YP	=	Yield point	= 75,000 lb/in^2
ρ_{stl}	=	Density of shaft material	= 0.284 lb/in^3

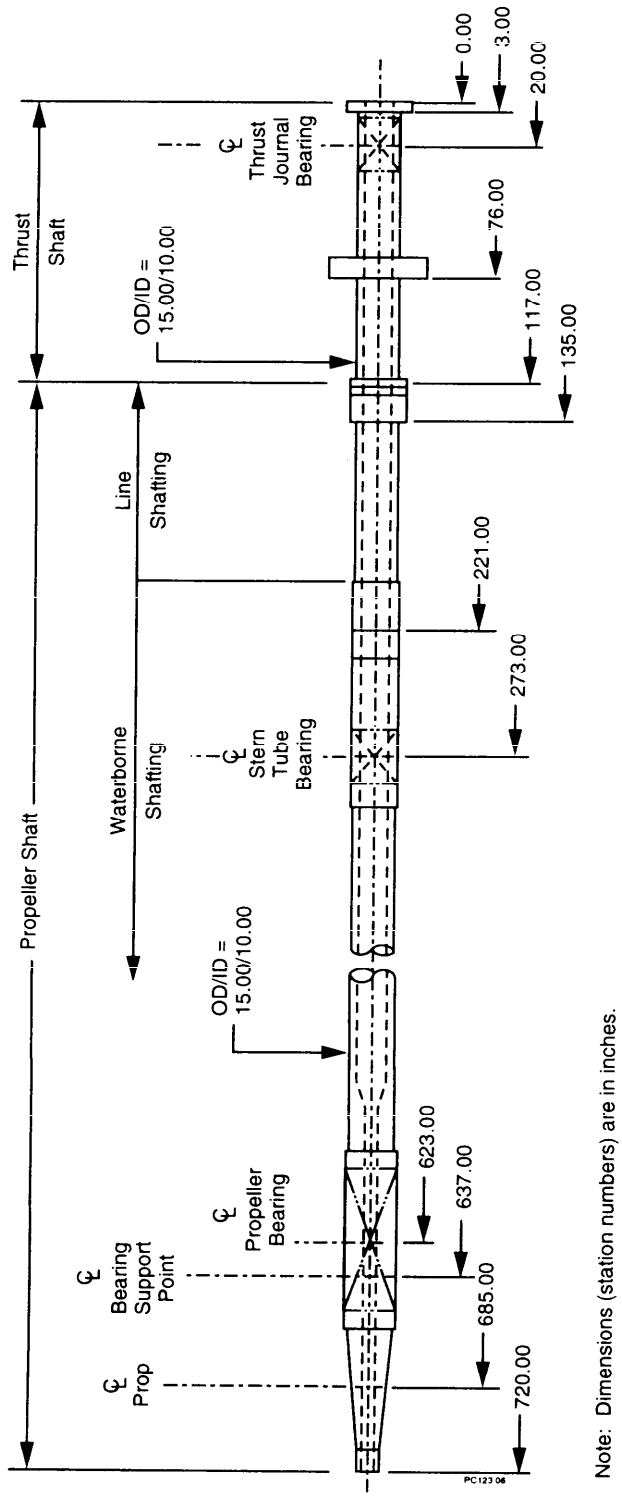

Note: Dimensions (station numbers) are in inches.

Figure 6. Submarine Shafting System

APPENDIX A

Waterborne shaft

		Material	= MIL-S-23284, class 1
D_t	=	Outside diameter at small end of shaft propeller taper	= 10.83 inches
D_u	=	Diameter of undercut at prop nut shaft threads	= 9.25 inches
d	=	Propeller shaft reduced bore	= 5.00 inches
d_n	=	Outer diameter of propeller nut	= 16.75 inches
d_{th}	=	Outside diameter of shaft threads	= 10.00 inches
E	=	Shaft modulus of elasticity	= 29,500,000 lb/in^2
F_T	=	Maximum force developed by hydraulic propeller nut	= 350 long tons
FL	=	Fatigue limit	= 47,500 lb/in^2
G	=	Shaft shear modulus	= 11,750,000 lb/in^2
ID	=	Shaft inside diameter	= 10.00 inches
L_n	=	Length of propeller nut	= 8.50 inches
L_t	=	Length of shaft taper	= 50.00 inches
L_{th}	=	Length of propeller nut shaft threads	= 10.00 inches
OD	=	Shaft outside diameter	= 15.00 inches
r_k	=	Radius of keyway fillet	= 0.375 inches
UT	=	Ultimate tensile strength	= 95,000 lb/in^2
YP	=	Yield point	= 75,000 lb/in^2
ρ_{icw}	=	Density of sand	= 0.064 lb/in^3
ρ_{stl}	=	Density of shaft material	= 0.284 lb/in^3

Waterborne shaft sleeve

		Material	= *Ni-Cr-Mo-Cb* alloy 625 (forged)
D_{gr}	=	Sleeve groove outside diameter at bottom of groove	= 15.75 inches
E_{sl}	=	Sleeve modulus of elasticity	= 30,000,000 lb/in^2
G_{sl}	=	Sleeve shear modulus	= 11,500,000 lb/in^2
OD_{sl}	=	Outside diameter of sleeve	= 16.375 inches
S_{arg}	=	Resultant alternating stress at sleeve groove diameter (maximum allowable)	= 6,400 lb/in^2
r_g	=	Radius of sleeve groove fillet	= 0.0625 inches
ρ_{sl}	=	Density of sleeve material	= 0.305 lb/in^3

30.1.2 Shaft alignment analysis results. A shaft alignment analysis was performed for the submarine shafting system shown on Figure 6 for all operating conditions. The values shown in Table VI represent the maximum bending moments that exist at each station throughout the operating range. Other information from the analysis, such as stress concentration factors, are introduced into the computation as needed.

APPENDIX A

Table VI. Submarine shafting system maximum gravity bending moments.

Station	Location[1/]	Max Gravity bending moment M_g, (in-lb)	Cond.[2/]
3.00	Thrust shaft forward flange	477	b
20.00	Thrust shaft journal bearing	10,042	b
76.00	Thrust collar fillet	302,146	c
117.00	Thrust shaft aft flange	360,720	d
135.00	Aft face of inboard coupling	358,284	e
221.00	Forward lock ring groove	137,313	c
273.00	Stern tube bearing	162,586	d
637.00	Prop bearing support point	1,116,000	a

1/ The shafting system stations were selected for illustrative purposes only and do not represent all stations required for stress and factor-of-safety analysis.

2/ Ship condition at which maximum bending moment occurs. See 5.4.2 for a complete listing of conditions that are required to be analyzed.

a) In air, straight line
b) Waterborne, surfaced, machinery cold, aligned, no weardown
c) Waterborne, surfaced, machinery hot, aligned, sea slap, no weardown
d) Waterborne, surfaced, machinery hot, aligned, 100% collective weardown
e) Waterborne, 100% test depth, machinery hot, aligned, rise, 100% collective weardown

30.1.3 Station 3.00, thrust shaft forward flange.

30.1.3.1 Steady stresses.

(a) Steady shear stress due to torque.

Full power torque is obtained using (Eq-1):

$$Q = \frac{63{,}025 \times SHP}{RPM} = \frac{63{,}025 \times 14{,}000}{155}$$

$$= 5{,}692{,}600 \ in\text{-}lb$$

Torque at 120 percent of full power is obtained using (Eq-2a):

$$Q_T = 1.2 \times Q = 1.2 \times 5{,}692{,}600 = 6{,}831{,}100 \ in\text{-}lb$$

Steady shear stress is obtained using (Eq-3b):

$$S_s = \frac{5.1 \times Q_T \times OD}{OD^4 - ID^4} = \frac{5.1 \times 6{,}831{,}100 \times 15.00}{15.00^4 - 10.0^4}$$

$$= 12{,}863 \ lb/in^2$$

(b) Steady compressive stress due to thrust.

This station is forward of the thrust collar. Therefore, the total thrust, T_T, and steady compressive stress, S_c, are zero (see 5.4.1.3.2).

(c) Resultant steady stress.

The resultant steady stress is obtained as shown in (Eq-9):

$$S_{sr} = [S_C^2 + (2 \times S_s)^2]^{1/2} = [0 + (2 \times 12{,}863)^2]^{1/2}$$

$$= 25{,}726 \ lb/in^2$$

30.1.3.2 Alternating stresses.

(a) Gravity bending moment.

The gravity bending moment, M_g, is obtained from Table VI. Because this design example is for a submarine, the total moment, M_T, is equal to the gravity moment (see Table II).

$$M_T = M_g = 477 \ in\text{-}lb$$

(b) Bending stress.

The bending stress is obtained using (Eq-11b):

$$S_b = \frac{10.2 \times M_T \times OD}{OD^4 - ID^4} = \frac{10.2 \times 477 \times 15.00}{15.00^4 - 10.00^4}$$

$$= 1.80 \ lb/in^2$$

(c) Alternating torsional shear stress.

The alternating torsional shear stress is obtained using (Eq-12):

$$S_{as} = 0.05 \times S_s = 0.05 \times 12{,}863 = 643.15 \ lb/in^2$$

Note: The values determined by the detailed propulsion system vibration analysis shall be substituted in the design

calculation if they are larger at the corresponding shaft *RPM* than the approximation given by (Eq-12).

(d) Stress concentration factors.

The stress concentration factors are obtained by using Figures 2 and 3.

$$\frac{r_f}{OD} = \frac{3.00}{15.00} = 0.200$$

$$\frac{D_f}{OD} = \frac{24.00}{15.00} = 1.60$$

$$K_b = 1.44$$

$$K_t = 1.23$$

(e) Resultant alternating stress.

The resultant alternating stress is obtained by combining the alternating bending and torsional shear stresses as shown in (Eq-13):

$$S_{ar} = [(K_b \times S_b)^2 + (2 \times K_t \times S_{as})^2]^{1/2}$$

$$= [(1.44 \times 1.80)^2 + (2 \times 1.23 \times 643.15)^2]^{(1/2)}$$

$$= 1582.1 \ lb/in^2$$

30.1.3.3 Factor of safety.

The factor of safety is obtained by using (Eq-14b):

$$FS = \frac{1}{\frac{S_{sr}}{YP} + \frac{S_{ar}}{FL}} = \frac{1}{\frac{25,726}{75,000} + \frac{1,582.1}{47,500}} = 2.65 \geq 2.00$$

The factor of safety at station 3.00 is adequate (see Table III).

30.1.4 Station 20.00, thrust shaft journal bearing.

30.1.4.1 Steady stresses.

(a) Steady shear stress due to torque.

Full power torque is obtained using (Eq-1):

$$Q = \frac{63,025 \times SHP}{RPM} = \frac{63,025 \times 14,000}{155}$$

$$= 5,692,600 \ in\text{-}lb$$

APPENDIX A

Torque at 120 percent of full power is obtained using (Eq-2a):

$$Q_T = 1.2 \times Q = 1.2 \times 5{,}692{,}600 = 6{,}831{,}100 \ in\text{-}lb$$

Steady shear stress is obtained using (Eq-3b):

$$S_s = \frac{5.1 \times Q_T \times OD}{OD^4 - ID^4} = \frac{5.1 \times 6{,}831{,}100 \times 15.00}{15.00^4 - 10.0^4}$$

$$= 12{,}863 \ lb/in^2$$

(b) Steady compressive stress due to thrust.

This station is forward of the thrust collar. Therefore, the total thrust, T_T, and steady compressive stress, S_c, are zero (see 5.4.1.3.2).

(c) Resultant steady stress.

The resultant steady stress is obtained as shown in (Eq-9):

$$S_{sr} = [S_c^2 + (2 \times S_s)^2]^{1/2} = [0 + (2 \times 12{,}863)^2]^{1/2}$$

$$= 25{,}726 \ lb/in^2$$

30.1.4.2 Alternating stresses.

(a) Gravity bending moment.

The gravity bending moment, M_g, is obtained from Table VI. Because this design example is for a submarine, the total moment, M_T, is equal to the gravity moment (see Table II).

$$M_T = M_g = 10{,}042 \ in\text{-}lb$$

(b) Bending stress.

The bending stress is obtained using (Eq-11b):

$$S_b = \frac{10.2 \times M_T \times OD}{OD^4 - ID^4} = \frac{10.2 \times 10{,}042 \times 15.00}{15.00^4 - 10.0^4}$$

$$37.82 \ lb/in^2$$

(c) Alternating torsional shear stress.

The alternating torsional shear stress is obtained using (Eq-12):

$$S_{as} = 0.05 \times S_s = 0.05 \times 12{,}863 = 643.15 \ lb/in^2$$

Note: The values determined by the detailed propulsion system vibration analysis shall be substituted in the design

calculation if they are larger at the corresponding shaft *RPM* than the approximation given by (Eq-12).

(d) Stress concentration factors.

The stress concentration factors, K_b and K_t, equal 1.00 at this station.

(e) Resultant alternating stress.

The resultant alternating stress is obtained by combining the alternating bending and torsional shear stresses as shown in (Eq-13):

$$S_{ar} = [(K_b \times S_b)^2 + (2 \times K_t \times S_{as})^2]^{1/2}$$

$$= [(1.00 \times 37.82)^2 + (2 \times 1.00 \times 643.15)^2]^{1/2}$$

$$= 1286.9 \ lb/in^2$$

30.1.4.3 Factor of safety.

The factor of safety is obtained by using (Eq-14b):

$$FS = \frac{1}{\frac{S_{sr}}{YP} + \frac{S_{ar}}{FL}} = \frac{1}{\frac{25,726}{75,000} + \frac{1,286.9}{47,500}} = 2.70 \geq 2.00$$

The factor of safety at station 20.00 is adequate (see Table III).

30.1.5 Station 76.00, thrust collar fillet.

30.1.5.1 Steady stresses.

(a) Steady shear stress due to torque.

Full power torque is obtained using (Eq-1):

$$Q = \frac{63,025 \times SHP}{RPM} = \frac{63,025 \times 14,000}{155}$$

$$= 5,692,600 \ in\text{-}lb$$

Torque at 120 percent of full power is obtained using (Eq-2a):

$$Q_T = 1.2 \times Q = 1.2 \times 5,692,600 = 6,831,100 \ in\text{-}lb$$

Steady shear stress is obtained using (Eq-3b):

$$S_s = \frac{5.1 \times Q_t \times OD}{OD^4 - ID^4} = \frac{5.1 \times 6,831,100 \times 15.0}{15.0^4 - 10.0^4}$$

$= 12,863\ lb/in^2$

(b) Steady compressive stress due to thrust.

Effective horsepower and propulsive thrust are obtained by using (Eq-5):

$$EHP = SHP \times PC = 14,000 \times 0.65 = 9,100.0\ hp$$

$$T = \frac{325.87 \times EHP}{V \times (1 - t)} = \frac{325.87 \times 9,100.0}{17 \times (1 - 0.15)} = 205,220\ lb$$

Submergence thrust between the main shaft seal and thrust collar is obtained using (Eq-6b):

$$T_{s2} = 0.44444 \times A_{s2} \times depth$$

$$= 0.44444 \times (0.78540 \times 23.0^2) \times 350$$

$$= 64,629\ lb$$

Total thrust is obtained using (Eq-7b):

$$T_T = T + T_{s2} = 205,220 + 64,629 = 269,850\ lb$$

Steady compressive stress is obtained using (Eq-8):

$$S_c = \frac{1.273 \times T_T}{OD^2 - ID^2} = \frac{1.273 \times 269,850}{15.0^2 - 10.0^2} = 2,748.2\ lb/in^2$$

(c) Resultant steady stress.

The resultant steady stress is obtained by combining the steady shear and compressive stresses as shown in (Eq-9):

$$S_{sr} = [S_c^2 + (2 \times S_s)^2]^{1/2}$$

$$= [2,748.2^2 + (2 \times 12,863)^2]^{1/2}$$

$$= 25,872\ lb/in^2$$

30.1.5.2 Alternating stresses.

(a) Gravity bending moment.

The gravity bending moment, M_g, is obtained from Table VI. Because this design example is for a submarine, the total moment, M_T, is equal to the gravity moment (see Table II).

$$M_T = M_g = 302,146\ in\text{-}lb$$

(b) Bending stress.

The bending stress is obtained using (Eq-11b):

$$S_b = \frac{10.2 \times M_T \times OD}{OD^4 - ID^4} = \frac{10.2 \times 302,146 \times 15.0}{15.0^4 - 10.0^4}$$

$$= 1,137.9 \ lb/in^2$$

(c) Alternating torsional shear stress.

The alternating torsional shear stress is obtained using (Eq-12):

$$S_{as} = 0.05 \times S_s = 0.05 \times 12,863 = 643.15 \ lb/in^2$$

Note: The values determined by the detailed propulsion system vibration analysis shall be substituted in the design calculation if they are larger at the corresponding shaft *RPM* than the approximation given by (Eq-12).

(d) Stress concentration factors.

The stress concentration factors, K_b and K_t, are obtained by using Figures 2 and 3.

$$\frac{r_{tc}}{OD} = \frac{3.00}{15.00} = 0.20$$

$$\frac{D_{tc}}{OD} = \frac{40.00}{15.00} = 2.67$$

$$K_b = 1.48$$

$$K_t = 1.25$$

(e) Resultant alternating stress.

The resultant alternating stress is obtained by combining the alternating bending and torsional shear stresses as shown in (Eq-13):

$$S_{ar} = [(K_b \times S_b)^2 + (2 \times K_t \times S_{as})^2]^{1/2}$$

$$= [(1.48 \times 1,137.9)^2 + (2 \times 1.25 \times 643.15)^2]^{1/2}$$

$$= [1,684.1^2 + (2 \times 803.94)^2]^{1/2} = 2,328.4 \ lb/in^2$$

30.1.5.3 Factor of safety.

The factor of safety is obtained by using (Eq-14b):

$$FS = \frac{1}{\frac{S_{ar}}{YP} + \frac{S_{ar}}{FL}} = \frac{1}{\frac{25,872}{75,000} + \frac{2,328.4}{47,500}} = 2.54 \geq 2.00$$

The factor of safety at station 76.00 is adequate (see Table III).

30.1.6 Station 117.00, thrust shaft aft flange.

30.1.6.1 Steady stresses.

(a) Steady shear stress due to torque.

Full power torque is obtained using (Eq-1):

$$Q = \frac{63{,}025 \times SHP}{RPM} = \frac{63{,}025 \times 14{,}000}{155}$$

$$= 5{,}692{,}600 \ in\text{-}lb$$

Torque at 120 percent of full power is obtained using (Eq-2a):

$$Q_T = 1.2 \times Q = 1.2 \times 5{,}692{,}600 = 6{,}831{,}100 \ in\text{-}lb$$

Steady shear stress is obtained using (Eq-3b):

$$S_s = \frac{5.1 \times Q_T \times OD}{OD^4 - ID^4} = \frac{5.1 \times 6{,}831{,}100 \times 15.0}{15.0^4 - 10.0^4}$$

$$= 12{,}863 \ lb/in^2$$

(b) Steady compressive stress due to thrust.

Effective horsepower and propulsive thrust are obtained using (Eq-5):

$$EHP = SHP \times PC = 14{,}000 \times 0.65 = 9{,}100.0 \ hp$$

$$T = \frac{325.87 \times EHP}{V \times (1 - t)} = \frac{325.87 \times 9{,}100.0}{17 \times (1 - 0.15)} = 205{,}220 \ lb$$

Submergence thrust between the main shaft seal and thrust collar is obtained using (Eq-6b):

$$T_{s2} = 0.44444 \times A_{s2} \times depth$$

$$= 0.44444 \times (0.78540 \times 23.0^2) \times 350$$

$$= 64{,}629 \ lb$$

Total thrust is obtained using (Eq-7b):

$$T_T = T + T_{s2} = 205{,}220 + 64{,}629 = 269{,}850 \ lb$$

Steady compressive stress is obtained using (Eq-8):

$$S_c = \frac{1.273 \times T_T}{OD^2 - ID^2} = \frac{1.273 \times 269,850}{15.0^2 - 10.0^2} = 2,748.2 \ lb/in^2$$

(c) Resultant steady stress.

The resultant steady stress is obtained by combining the steady shear and compressive stresses as shown in (Eq-9):

$$S_{sr} = [S_c^2 + (2 \times S_s)^2]^{1/2}$$

$$= [2,748.2^2 + (2 \times 12,863)^2]^{1/2}$$

$$= 25,872 \ lb/in^2$$

30.1.6.2 Alternating stresses.

(a) Gravity bending moment.

The gravity bending moment, M_g, is obtained from Table VI. Because this design example is for a submarine, the total moment, M_T, is equal to the gravity moment (see Table II).

$$M_T = M_g = 360,720 \ in\text{-}lb$$

(b) Bending stress.

The bending stress is obtained using (Eq-11b):

$$S_b = \frac{10.2 \times M_T \times OD}{OD^4 - ID^4} = \frac{10.2 \times 360,720 \times 15.0}{15.0^4 - 10.0^4}$$

$$= 1,358.5 \ lb/in^2$$

(c) Alternating torsional shear stress.

The alternating torsional shear stress is obtained using (Eq-12):

$$S_{as} = 0.05 \times S_s = 0.05 \times 12,863 = 643.15 \ lb/in^2$$

Note: The values determined by the detailed propulsion system vibration analysis shall be substituted in the design calculation if they are larger at the corresponding shaft *RPM* than the approximation given by (Eq-12).

(d) Stress concentration factors.

The stress concentration factors, K_b and K_t, are determined by using figures 2 and 3.

$$\frac{r_f}{OD} = \frac{3.00}{15.00} = 0.20$$

$$\frac{D_f}{OD} = \frac{24.00}{15.00} = 1.60$$

$K_b = 1.44$

$K_t = 1.23$

(e) Resultant alternating stress.

The resultant alternating stress is obtained by combining the alternating bending and torsional shear stresses as shown in (Eq-13):

$$S_{ar} = [(K_b \times S_b)^2 + (2 \times K_t \times S_{as})^2]^{1/2}$$

$$= [(1.44 \times 1{,}358.5)^2 + (2 \times 1.23 \times 643.15)^2]^{1/2}$$

$$= 2{,}516.0 \ lb/in^2$$

30.1.6.3 Factor of safety.

The factor of safety is obtained by using (Eq-14b):

$$FS = \frac{1}{\frac{S_{sr}}{YP} + \frac{S_{ar}}{FL}} = \frac{1}{\frac{25{,}872}{75{,}000} + \frac{2{,}516.0}{47{,}500}} = 2.51 \geq 2.00$$

The factor of safety at station 117.00 is adequate (see Table III).

30.1.7 Station 135.00, aft face of inboard coupling.

30.1.7.1 Steady stresses.

(a) Steady shear stress due to torque.

Full power torque is obtained using (Eq-1):

$$Q = \frac{63{,}025 \times SHP}{RPM} = \frac{63{,}025 \times 14{,}000}{155}$$

$$= 5{,}692{,}600 \ in\text{-}lb$$

Torque at 120 percent of full power is obtained using (Eq-2a):

$$Q_T = 1.2 \times Q = 1.2 \times 5{,}692{,}600 = 6{,}831{,}100 \ in\text{-}lb$$

Steady shear stress is obtained using (Eq-3b):

$$S_s = \frac{5.1 \times Q_T \times OD}{OD^4 - ID^4} = \frac{5.1 \times 6{,}831{,}100 \times 15.0}{15.0^4 - 10.0^4}$$

$$= 12{,}863 \ lb/in^2$$

(b) Steady compressive stress due to thrust.

Effective horsepower and propulsive thrust are obtained using (Eq-5):

$$EHP = SHP \times PC = 14{,}000 \times 0.65 = 9{,}100.0\ hp$$

$$T = \frac{325.87 \times EHP}{V \times (1 - t)} = \frac{325.87 \times 9{,}100.0}{17 \times (1 - 0.15)} = 205{,}220\ lb$$

Submergence thrust between the main shaft seal and thrust collar is obtained using (Eq-6b):

$$T_{s2} = 0.44444 \times A_{s2} \times depth$$

$$= 0.44444 \times (0.78540 \times 23.0^2) \times 350$$

$$= 64{,}629\ lb$$

Total thrust is obtained using (Eq-7b):

$$T_T = T + T_{s2} = 205{,}220 + 64{,}629 = 269{,}850\ lb$$

Steady compressive stress is obtained using (Eq-8):

$$S_c = \frac{1.273 \times T_T}{OD^2 - ID^2} = \frac{1.273 \times 269{,}850}{15.0^2 - 10.0^2} = 2{,}748.2\ lb/in^2$$

(c) Resultant steady stress.

The resultant steady stress is obtained by combining the steady shear and compressive stresses as shown in (Eq-9):

$$S_{sr} = [S_c^2 + (2 \times S_s)^2]^{1/2}$$

$$= [2{,}748.2^2 + (2 \times 12{,}863)^2]^{1/2}$$

$$= 25{,}872\ lb/in^2$$

30.1.7.2 Alternating stresses.

(a) Gravity bending moment.

The gravity bending moment, M_g, is obtained from Table VI. Because this design example is for a submarine, the total moment, M_T, is equal to the gravity moment (see Table II).

$$M_T = M_g = 358{,}284\ in\text{-}lb$$

(b) Bending stress.

The bending stress is obtained using (Eq-11b):

$$S_b = \frac{10.2 \times M_T \times OD}{OD^4 - ID^4} = \frac{10.2 \times 358{,}284 \times 15.0}{15.0^4 - 10.0^4}$$

$= 1,349.4\ lb/in^2$

(c) Alternating torsional shear stress.

The alternating torsional shear stress is obtained using (Eq-12):

$$S_{as} = 0.05 \times S_s = 0.05 \times 12,863 = 643.15\ lb/in^2$$

Note: The values determined by the detailed propulsion system vibration analysis shall be substituted in the design calculation if they are larger at the corresponding shaft *RPM* than the approximation given by (Eq-12).

(d) Stress concentration factors.

The stress concentration factor in torsion, K_t, is determined using Figure 1. The stress concentration factor in bending, K_b, is 1.00 (see 5.4.2.2.1). Depth of keyway, H, is provided in 30.1.11.2.

$$\frac{r_k}{H} = \frac{0.375}{1.400} = 0.268$$

$$K_t = 1.60$$

(e) Resultant alternating stress.

The resultant alternating stress is obtained by combining the alternating bending and torsional shear stresses as shown in (Eq-13).

$$S_{ar} = [(K_b \times S_b)^2 + (2 \times K_t \times S_{as})^2]^{1/2}$$

$$= [(1.00 \times 1,349.4)^2 + (2 \times 1.60 \times 643.15)^2]^{1/2}$$

$$= 2,461\ lb/in^2$$

30.1.7.3 Factor of safety.

The factor of safety is obtained by using (Eq-14b):

$$FS = \frac{1}{\frac{S_{ar}}{YP} + \frac{S_{ar}}{FL}} = \frac{1}{\frac{25,872}{75,000} + \frac{2,461}{47,500}} = 2.52 \geq 2.00$$

The factor of safety at station 135.00 is adequate (see Table III).

30.1.8 Station 221.00, seal forward lock ring groove.

The resultant alternating stress in the seal sleeve lock ring groove must meet the criteria outlined in 5.6.1.

30.1.8.1 Alternating stresses.

(a) Gravity bending moment.

The gravity bending moment, M_g, is obtained from Table VI. Because this design example is for a submarine, the total moment, M_T is equal to the gravity moment (see Table II).

$$M_T = M_g = 137{,}313 \ in\text{-}lb$$

(b) Bending stress.

The bending stress at the forward lock ring of the sleeve is obtained using (Eq-25a), (Eq-25b), and (Eq-24).

$$I_{gr} = \frac{\pi \times (D_{gr}^4 - OD^4)}{64} = \frac{3.1416 \times (15.75^4 - 15.00^4)}{64}$$

$$= 535.54 \ in^4$$

$$I = \frac{\pi \times (OD^4 - ID^4)}{64} = \frac{3.1416 \times (15.0^4 - 10.0^4)}{64}$$

$$= 1{,}994.2 \ in^4$$

$$S_{bg} = \frac{M_T \times E_{sl} \times D_{gr}}{2 \times [(E_{sl} \times I_{gr}) + (E \times I)]}$$

$$= \frac{137{,}313 \times 30{,}000{,}000 \times 15.75}{2 \times [(30{,}000{,}000 \times 535.54) + (29{,}500{,}000 \times 1{,}994.2)]}$$

$$= 433.14 \ lb/in^2$$

(c) Alternating torsional shear stress.

The alternating torsional shear stress at the forward lock ring groove of the sleeve is obtained by using (Eq-27a), (Eq-27b), and (Eq-26).

$$J_{gr} = 2 \times I_{gr} = 2 \times 535.54 = 1{,}071.1 \ in^4$$

$$J = 2 \times I = 2 \times 1{,}994.2 = 3{,}988.4 \ in^4$$

$$S_{asg} = \frac{0.05 \times Q_T \times G_{sl} \times D_{gr}}{2 \times [(G_{sl} \times J_{gr}) + (G \times J)]}$$

$$= \frac{0.05 \times 6{,}831{,}100 \times 11{,}500{,}000 \times 15.75}{2 \times [(11{,}500{,}000 \times 1{,}071.1) + (11{,}750{,}000 \times 3{,}988.4)]}$$

$= 522.67\ lb/in^2$

(d) Stress concentration factors.

The stress concentration factors, K_b and K_t, are obtained by using Figures 49 and 55 from Peterson.

$$\frac{r_g}{OD_{sl}} = \frac{0.0625}{16.375} = 0.0038$$

$$\frac{D_{gr}}{OD_{sl}} = \frac{15.75}{16.375} = 0.9618$$

$$K_b = 4.7$$

$$K_t = 2.9$$

(e) Resultant alternating stress.

The resultant alternating stress at the forward lock ring groove of the sleeve is obtained by using (Eq-28):

$$S_{arg} = [(K_b \times S_{bg})^2 + (2 \times K_t \times S_{asg})^2]^{1/2}$$

$$= [(4.7 \times 433.14)^2 + (2 \times 2.9 \times 522.67)^2]^{1/2}$$

$$= 3{,}651.6\ lb/in^2 \leq 6{,}400\ lb/in^2$$

The resultant alternating stress at the forward lock ring groove diameter is well within the maximum allowed (see 5.6.1.).

30.1.9 Station 273.00, stern tube bearing.

30.1.9.1 Steady stresses.

(a) Steady shear stress due to torque.

Full power torque is obtained using (Eq-1):

$$Q = \frac{63{,}025 \times SHP}{RPM} = \frac{63{,}025 \times 14{,}000}{155}$$

$$= 5{,}692{,}600\ in\text{-}lb$$

Torque at 120 percent of full power is obtained using (Eq-2a):

$$Q_T = 1.2 \times Q = 1.2 \times 5{,}692{,}600 = 6{,}831{,}100\ in\text{-}lb$$

Steady shear stress is obtained using (Eq-3b):

$$S_s = \frac{5.1 \times Q_T \times OD}{OD^4 - ID^4} = \frac{5.1 \times 6{,}831{,}100 \times 15.00}{15.00^4 - 10.0^4}$$

$= 12,863\ lb/in^2$

(b) Steady compressive stress due to thrust.

Effective horsepower and propulsive thrust are obtained using (Eq-5):

$$EHP = SHP \times PC = 14,000 \times 0.65 = 9,100.0\ hp$$

$$T = \frac{325.87 \times EHP}{V \times (1 - t)} = \frac{325.87 \times 9,100.0}{17 \times (1 - 0.15)} = 205,220\ lb$$

Submergence thrust aft of the main shaft seal is obtained using (Eq-6a):

$$T_{s1} = 0.44444 \times A_{s1} \times depth$$

$$= 0.44444 \times (0.78540 \times 15.0^2) \times 350$$

$$= 27,489\ lb$$

Total thrust is obtained using (Eq-7a):

$$T_T = T + T_{s1} = 205,220 + 27,489 = 232,710\ lb$$

Steady compressive stress is obtained using (Eq-8):

$$S_c = \frac{1.273 \times T_T}{OD^2 - ID^2} = \frac{1.273 \times 232,710}{15.0^2 - 10.0^2} = 2,369.9\ lb/in^2$$

(c) Resultant steady stress.

The resultant steady stress is obtained as shown in (Eq-9):

$$S_{sr} = [S_c^2 + (2 \times S_s)^2]^{1/2}$$

$$= [2,369.9^2 + (2 \times 12,863)^2]^{1/2}$$

$$= 25,835\ lb/in^2$$

30.1.9.2 Alternating stresses.

(a) Gravity bending moment.

The gravity bending moment, M_g, is obtained from Table VI. Because this design example is for a submarine, the total moment, M_T, is equal to the gravity moment (see Table II).

$$M_T = M_g = 162,586\ in\text{-}lb$$

(b) Bending stress.

The bending stress is obtained using (Eq-11b):

$$S_b = \frac{10.2 \times M_T \times OD}{OD^4 - ID^4} = \frac{10.2 \times 162{,}586 \times 15.00}{15.00^4 - 10.0^4}$$

$$= 612.32 \ lb/in^2$$

(c) Stress concentration factors.

The stress concentration factors, K_b and K_t, equal 1.00 at this station.

(d) Maximum bending stress.

The maximum bending stress, K_b x S_b, at this station must be compared to the maximum allowable (see 4.20).

$$K_b \times S_b = 1.00 \times 612.32$$

$$= 612.32 \ lb/in^2 \leq 6{,}000 \ lb/in^2 \ \textbf{maximum allowable}$$

(e) Alternating torsional shear stress.

The alternating torsional shear stress is obtained using (Eq-12):

$$S_{as} = 0.05 \times S_s = 0.05 \times 12{,}863 = 643.15 \ lb/in^2$$

Note: The values determined by the detailed propulsion system vibration analysis shall be substituted in the design calculation if they are larger at the corresponding shaft *RPM* than the approximation given by (Eq-12).

(f) Resultant alternating stress.

The resultant alternating stress is obtained by combining the alternating bending and torsional shear stresses as shown in (Eq-13):

$$S_{ar} = [(K_b \times S_b)^2 + (2 \times K_t \times S_{as})^2]^{1/2}$$

$$= [(1.00 \times 612.32)^2 + (2 \times 1.00 \times 643.15)^2]^{1/2}$$

$$= 1{,}424.6 \ lb/in^2$$

30.1.9.3 Factor of safety.

The factor of safety is obtained by using (Eq-14b):

$$FS = \frac{1}{\frac{S_{ar}}{YP} + \frac{S_{ar}}{FL}} = \frac{1}{\frac{25{,}835}{75{,}000} + \frac{1{,}424.6}{47{,}500}} = 2.67 \geq 2.25$$

The factor of safety at station 273.00 is adequate (see Table III).

30.1.10 Station 637.00, propeller bearing support point.

30.1.10.1 Steady stresses.

(a) Steady shear stress due to torque.

Full power torque is obtained using (Eq-1):

$$Q = \frac{63{,}025 \times SHP}{RPM} = \frac{63{,}025 \times 14{,}000}{155} = 5{,}692{,}600 \ in\text{-}lb$$

Torque at 120 percent of full power is obtained using (Eq-2a):

$$Q_T = 1.2 \times Q = 1.2 \times 5{,}692{,}600 = 6{,}831{,}100 \ in\text{-}lb$$

Steady shear stress is obtained using (Eq-3b):

$$S_s = \frac{5.1 \times Q_T \times OD}{OD^4 - ID^4} = \frac{5.1 \times 6{,}831{,}100 \times 15.0}{15.0^4 - 10.0^4}$$

$$= 12{,}863 \ lb/in^2$$

(b) Steady compressive stress due to thrust.

Effective horsepower and propulsive thrust are obtained using (Eq-5):

$$EHP = SHP \times PC = 14{,}000 \times 0.65 = 9{,}100.0 \ hp$$

$$T = \frac{325.87 \times EHP}{V \times (1 - t)} = \frac{325.87 \times 9{,}100.0}{17 \times (1 - 0.15)} = 205{,}220 \ lb$$

Submergence thrust aft of the main shaft seal is obtained using (Eq-6a):

$$T_{s1} = 0.44444 \times A_{s1} \times depth$$

$$= 0.44444 \times (0.78540 \times 15.0^2) \times 350$$

$$= 27{,}489 \ lb$$

Total thrust is obtained using (Eq-7a):

$$T_T = T + T_{s1} = 205{,}220 + 27{,}489 = 232{,}710 \ lb$$

Steady compressive stress is obtained using (Eq-8):

$$S_c = \frac{1.273 \times T_T}{OD^2 - ID^2} = \frac{1.273 \times 232{,}710}{15.0^2 - 10.0^2} = 2{,}369.9 \ lb/in^2$$

(c) Resultant steady stress.

The resultant steady stress is obtained by combining the steady shear and compressive stresses as shown in (Eq-9):

$$S_{sr} = [S_c^2 + (2 \times S_s)^2]^{1/2}$$

$$= [2,369.9^2 + (2 \times 12,863)^2]^{1/2}$$

$$= 25,835 \ lb/in^2$$

D.1.10.2 Alternating stresses.

(a) Gravity bending moment.

The gravity bending moment, M_p, at the aftermost bearing support point, due to the overhanging weight of the propeller and shafting in air, is calculated in the following tabulated procedure (see Figure 7). This moment calculation is intended to verify the moment obtained by the alignment analysis (see Table VI) and will be used for the stress analysis at this station.

(1) Sleeve (aft of support point):

Weight:

$$W_{sl} = \rho_{sl} \times \frac{\pi}{4} \times (OD_{sl}^2 - OD^2) \times L_{sl}$$

$$= 0.305 \times 0.7854 \times (16.375^2 - 15.00^2) \times 22.75$$

$$= 235.1 \ lbs$$

Moment arm:

$$X_{sl} = \frac{L_{sl}}{2} = \frac{22.75}{2} = 11.375 \ inches$$

(2) Shaft straight section (aft of support point):

Weight:

$$W_{str} = \rho_{stl} \times \frac{\pi}{4} \times (OD^2 - d^2) \times L_{str}$$

$$= 0.284 \times 0.7854 \times (15.00^2 - 5.00^2) \times 23.00$$

$$= 1,026 \ lbs$$

Moment arm:

$$X_{str} = \frac{L_{str}}{2} = \frac{23.00}{2} = 11.50 \ inches$$

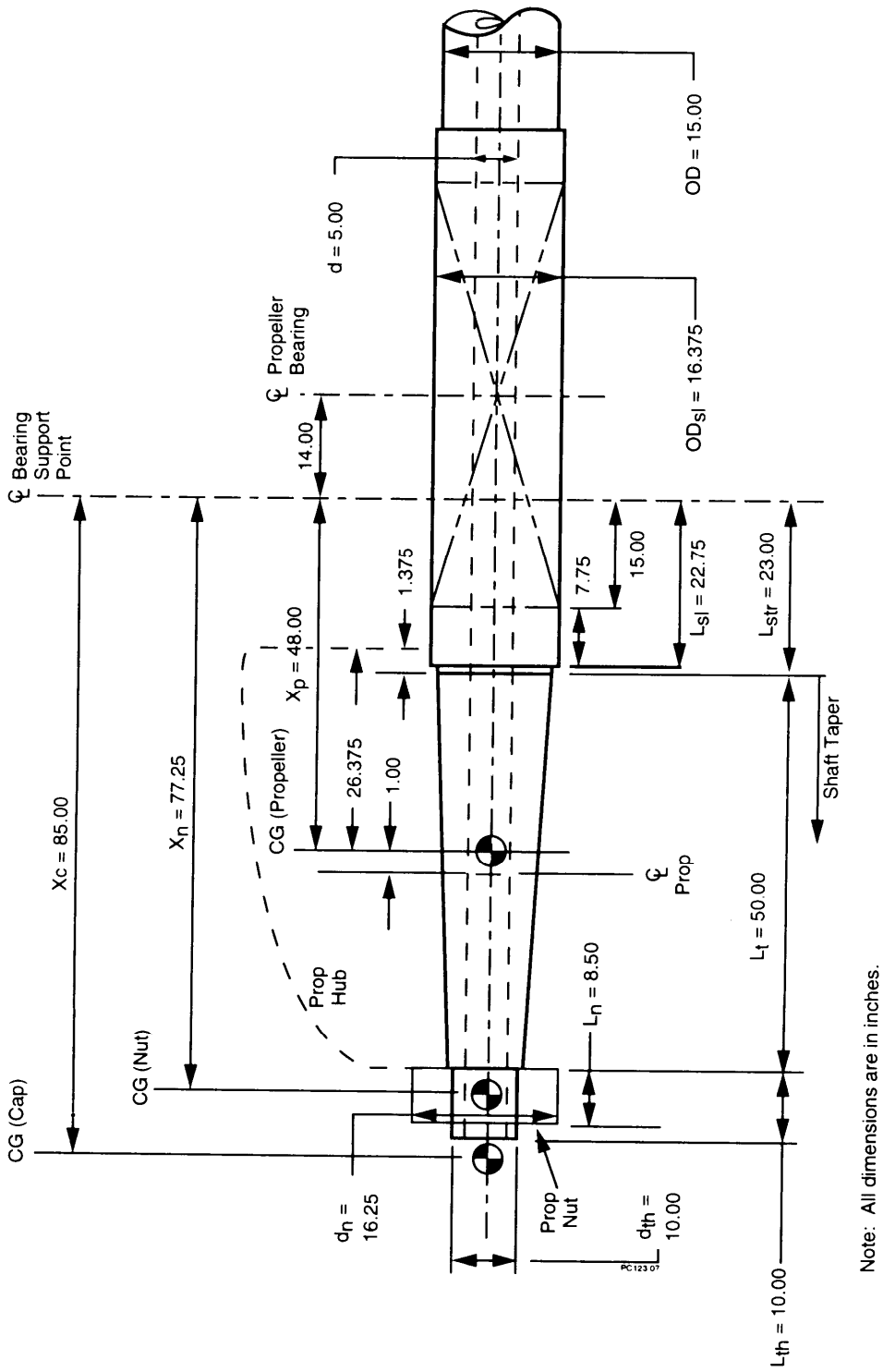

Note: All dimensions are in inches.

Figure 7. Submarine Shafting System: Aftermost Bearing Support Point

(3) Shaft bore (sand):

To account for the compacting plug, locking plug, and bore plug; it will be assumed that sand is in the bore to the end of the shaft.

Weight:

$$W_{ic} = \rho_{ic} \times \frac{\pi}{4} \times d^2 \times (L_{str} + L_t + L_{th})$$

$$= 0.064 \times 0.7854 \times 5.00^2 \times (23.00 + 50.00 + 10.00)$$

$$= 104.30 \ lbs$$

Moment arm:

$$X_{ic} = \frac{L_{str} + L_t + L_{th}}{2} = \frac{83.00}{2} = 41.50 \ inches$$

(4) Shaft propeller taper:

Weight:

The weight of the shaft propeller taper, W_t, is obtained by first determining the volume of the shaft taper, V_t, and then subtracting from it the volume of the shaft bore, V_{tb}.

$$V_t = \frac{\pi}{12} \times [OD^2 + (OD \times D_t) + D_t^2] \times L_t$$

$$= 0.2618 \times [15.00^2 + (15.00 \times 10.83) + 10.83^2] \times 50.00$$

$$= 6{,}607 \ in^3$$

$$V_{tb} = \frac{\pi}{4} \times d^2 \times L_t$$

$$= 0.7854 \times 5.00^2 \times 50.00$$

$$= 981.75 \ in^3$$

$$W_t = \rho_{stl} \times (V_t - V_{tb})$$

$$= 0.284 \times (6{,}607 - 981.75)$$

$$= 1{,}597.6 \ lbs$$

Moment arm:

The moment arm of the shaft propeller taper, X_t, is obtained by first determining the center of gravity of the

taper, Y_t, and the shaft bore, Y_{tb}, and then combining the two.

$$Y_t = \frac{L_t \times [OD^2 + (2 \times OD \times D_t) + (3 \times D_t^2)]}{4 \times [OD^2 + (OD \times D_t) + D_t^2]}$$

$$= \frac{50.00 \times [15.0^2 + (2 \times 15.0 \times 10.83) + (3 \times 10.83^2)]}{4 \times [15.00^2 + (15.00 \times 10.83) + 10.83^2]}$$

$$= 22.332 \text{ inches}$$

$$y_{tb} = \frac{L_t}{2} = \frac{50.00}{2} = 25.00 \text{ inches}$$

$$X_t = \frac{(V_t \times y_t) - (V_{tb} \times y_{tb})}{V_t - V_{tb}} + L_{str}$$

$$= \frac{(6,607 \times 22.332) - (981.75 \times 25.00)}{6,607 - 981.75} + 23.00$$

$$= 44.87 \text{ inches}$$

(5) Shaft threads:

Weight:

$$W_{th} = P_{stl} \times \frac{\pi}{4} \times (d_{th}^2 - d^2) \times L_{th}$$

$$= 0.284 \times 0.7854 \times (10.00^2 - 5.00^2) \times 10.00$$

$$= 167.29 \text{ lbs}$$

Moment arm:

$$X_{th} = \frac{L_{th}}{2} + L_t + L_{str} = \frac{10.00}{2} + 50.00 + 23.00$$

$$= 78.00 \text{ inches}$$

(6) Propeller nut:

Weight:

$$W_n = \rho_{stl} \times \frac{\pi}{4} \times (d_n^2 - d_{th}^2) \times L_n$$

$$= 0.284 \times 0.7854 \times (16.75^2 - 10^2) \times 8.5$$

$$= 342.34 \text{ lbs}$$

Moment arm:

$$X_n = (\frac{L_n}{2}) + L_t + L_{str}$$

$$= \frac{8.5}{2} + 50.00 + 23.00$$

$$= 77.25 \ inches$$

Table VII is a tabulation of the calculated overhung bending moment, M_p.

Since this design example is for a submarine, the total moment, M_T, is equal to the overhung bending moment, M_p (see Table II).

Table VII. Tabulation of overhung bending moment, M_p at station 637.00.

Shaft Component	Weight W_{ii} (pound)	Moment Arm X_{ii} (inch)	Moment $W_{ii} \times X_{ii}$ (in-lb)
Sleeve	W_{sl} = 235.10	X_{sl} = 11.375	2,674
Straight Section	W_{str} = 1,026.00	X_{str} = 11.50	11,799
Bore	W_{ic} = 104.30	X_{ic} = 41.50	4,328
Propeller taper	W_t = 1,597.60	X_t = 44.87	71,684
Threads	W_{th} = 167.29	X_{th} = 78.00	13,049
Propeller	W_p = 17,000.00	X_p = 48.00	816,000
Nut	W_n = 342.34	X_n = 77.25	26,446
Cap	W_c = 2,000.00	X_c = 85.00	170,000
Total overhung bending moment, M_p =			1,115,980

(b) Bending stress.

The bending stress is obtained using (Eq-11b):

$$S_b = \frac{10.2 \ x \ M_T \ x \ OD}{OD^4 - ID^4} = \frac{10.2 \ x \ 1,115,980 \ x \ 15.0}{15.0^4 - 10.0^4}$$

$$= 4,203 \ lb/in^2$$

(c) Stress concentration factors:

The stress concentration factors, K_b and K_t, equal 1.00 at this station.

(d) Maximum bending stress:

The maximum bending stress, K_b x S_b, at this station must be compared to the maximum allowable (see 4.20).

$$K_b \times S_b = 1.00 \times 4{,}203$$

$$= 4{,}203 \ lb/in^2 \leq 6{,}000 \ lb/in^2 \ \textbf{maximum allowable}$$

(e) Alternating torsional shear stress.

The alternating torsional shear stress is obtained using (Eq-12):

$$S_{as} = 0.05 \times S_s = 0.05 \times 12{,}863 = 643.15 \ lb/in^2$$

Note: The values determined by the detailed propulsion system vibration analysis shall be substituted in the design calculation if they are larger at the corresponding shaft *RPM* than the approximation given by (Eq-12).

(f) Resultant alternating stress.

The resultant alternating stress is obtained by combining the alternating bending and torsional shear stresses as shown in (Eq-13):

$$S_{ar} = [(\bar{K}_b \times S_b)^2 + (2 \times \bar{K}_t \times S_{as})^2]^{1/2}$$

$$= [(1.00 \times 4{,}203)^2 + (2 \times 1.00 \times 643.15)^2]^{1/2}$$

$$= 4{,}394.5 \ lb/in^2$$

30.1.10.3 Factor of safety.

The factor of safety is obtained by using (Eq-14b):

$$FS = \frac{1}{\frac{S_{sr}}{YP} + \frac{S_{ar}}{FL}} = \frac{1}{\frac{25{,}835}{75{,}000} + \frac{4{,}394.5}{47{,}500}} = 2.29 \geq 2.25$$

The factor of safety at station 637.00 is adequate (see Table III).

30.1.11 Shafting components.

30.1.11.1 Key design, propeller taper.

	Key material	= MIL-S-24093
H	= Depth of keyway at midlength of B_e	= 1.200 inches
L_t	= Length of shaft taper	= 50.00 inches
N_1	= Number of keys	= 2

APPENDIX A

OD	= Outside diameter of shaft (at start of shaft propeller taper)	= 15.00 inches
Q_T	= Total torque	= 6,831,100 in-lb
S_{ck}	= Allowable compressive stress of key	= 24,000 lb/in2
S_{sk}	= Allowable shearing stress of key	= 10,000 lb/in
r_k	= Radius of keyway fillet	= 0.375 inches
W	= Width of key	= 1.500 inches
t_p	= Shaft taper at propeller	= 1.00 in/ft

C_h = Key chamfer

$$= r_k + 1/32 = 0.375 + 0.0313 \qquad = 0.4063 \textit{ inches}$$

B_e = Effective length of key (Eq-29a)

$$= L_t - (8 \times H) = 50.00 - (8 \times 1.200) \qquad = 40.40 \textit{ inches}$$

b_1 = Contact depth of keyway

$$= H - C_h = 1.200 - 0.4063 \qquad = 0.7937 \textit{ inches}$$

L_m = Distance from start of shaft taper to midlength of B_e

$$= L_t - \frac{B_e}{2} = 50.00 - \frac{40.40}{2} \qquad = 29.80 \textit{ inches}$$

D_m = Diameter of shaft taper at midlength of B_e

$$= OD - [t_p \times \frac{L_m}{12}]$$

$$= 15.00 - [1.00 \times \frac{29.80}{12}] \qquad = 12.517 \textit{ inches}$$

D_k = Diameter at midpoint of contact depth at midlength of B_e

$$= D_m - b_1 = 12.517 - 0.7937 \qquad = 11.723 \textit{ inches}$$

(a) Minimum allowable key width.

The minimum allowable key width is obtained using (Eq-30):

$$W(\min) = \frac{2 \times Q_T}{N_1 \times B_e \times D_m \times S_{sk}}$$

$$= \frac{2 \times 6{,}831{,}100}{2 \times 40.40 \times 12.517 \times 10{,}000}$$

$$= 1.351 \textit{ inches} \leq 1.50 \textit{ inches}$$

The key is of sufficient width.

(b) Minimum allowable contact depth.

The minimum allowable contact depth is obtained using (Eq-31):

$$b_1(\text{min}) = \frac{2 \times Q_T}{N_1 \times B_e \times D_k \times S_{ck}}$$

$$= \frac{2 \times 6{,}831{,}100}{2 \times 40.40 \times 11.723 \times 24{,}000}$$

$$= 0.6010 \textit{ inches} \leq 0.7937 \textit{ inches}$$

The key has sufficient contact depth.

Accordingly, two keys of 1.500 inch width and 2.4 (2 x H) inches height are acceptable.

30.1.11.2 Key design, inboard coupling taper.

	Key material	= MIL-S-24093
H	= Depth of keyway at midlength of B_e	= 1.400 inches
L_t	= Length of shaft taper	= 12.00 inches
N_1	= Number of keys	= 4
OD	= Outside diameter of shaft (at start of shaft coupling taper)	= 15.00 inches
Q_T	= Total torque	= 6,831,100 in-lb
S_{ck}	= Allowable compressive stress of key	= 24,000 lb/in^2
S_{sk}	= Allowable shearing stress of key	= 10,000 lb/in^2
r_k	= Radius of keyway fillet	= 0.375 inches
W	= Width of key	= 2.00 inches
t_c	= Shaft taper at coupling	= 0.125 in/ft

C_h = Key chamfer

$= r_k + 1/32 = 0.375 + 0.0313$ $= 0.4063$ ***inches***

B_e = Effective length of key (Eq-29b)

$= L_t - 0.250 = 12.00 - 0.25$ $= 11.75$ ***inches***

b_1 = Contact depth of keyway

$= H - C_h = 1.400 - 0.4063$ $= 0.9937$ ***inches***

L_m = Distance from start of shaft taper to midlength of B_e

$= L_t - \frac{B_e}{2} = 12.00 - \frac{11.75}{2}$ $= 6.125$ ***inches***

D_m = Diameter of shaft taper at midlength of B_e

$$= OD - [t_c \times \frac{L_m}{12}]$$

$$= 15.00 - [0.125 \times \frac{6.125}{12}] \qquad = 14.936 \text{ inches}$$

D_k = Diameter at midpoint of contact depth at midlength of B_e

$$= D_m - b_1 = 14.936 - 0.9937 \qquad = 13.942 \text{ inches}$$

(a) Minimum allowable key width.

The minimum allowable key width is obtained using (Eq-30):

$$W(\min) = \frac{2 \times Q_T}{N_1 \times B_e \times D_m \times S_{sk}}$$

$$= \frac{2 \times 6{,}831{,}100}{4 \times 11.75 \times 14.936 \times 10{,}000}$$

$$= 1.95 \text{ inches} \leq 2.00 \text{ inches}$$

The key is of sufficient width.

(b) Minimum allowable contact depth.

The minimum allowable contact depth is obtained using (Eq-31):

$$b_1(\min) = \frac{2 \times Q_T}{N_1 \times B_e \times D_k \times S_{ck}}$$

$$= \frac{2 \times 6{,}831{,}100}{4 \times 11.75 \times 13.942 \times 24{,}000}$$

$$= 0.869 \text{ inches} \leq 0.9937 \text{ inches}$$

The key has sufficient contact depth.

Accordingly, 4 keys of 2.00 inch width and 2.8 (2 x H) inch height are acceptable.

30.1.11.3 Bolt design, inboard coupling.

	Coupling bolt material	= MIL-S-24093
D_b	= Diameter of coupling bolt	= 1.875 inches
D_{bc}	= Bolt circle diameter	= 20.85 inches
N_b	= Number of bolts	= 12
Q_T	= Total torque	= 6,831,100 in-lb

A_{bt} = Bolt cross-sectional area at parting surface

$$= \frac{\pi}{4} \times D_b^2 = 0.7854 \times 1.875^2 \qquad = 2.7612\ in^2$$

S_{bt} = Shear stress of shaft coupling bolts (maximum allowable)

$$= \frac{\left(\frac{YP}{2}\right)}{FS} = \frac{\left(\frac{100,000}{2}\right)}{2.00} \qquad = 25,000\ lb/in^2$$

(a) Shear stress of shaft coupling bolts.

The shear stress of shaft coupling bolts is obtained using (Eq-32):

$$S_{bt} = \frac{2 \times Q_T}{N_b \times A_{bt} \times D_{bc}}$$

$$= \frac{2 \times 6,831,100}{12 \times 2.7612 \times 20.85} \qquad = 19,776\ lb/in^2$$

$19,776 \leq 25,000$; therefore bolt size is sufficient.

30.1.11.4 Shaft thread undercut.

D_u	= Diameter of undercut at propeller nut shaft thread	= 9.25 inches
d	= Propeller shaft reduced bore	= 5.00 inches
UT	= Ultimate tensile strength of shaft material	= 95,000 lb/in^2
F_T	= Maximum force developed by hydraulic propeller nut	
	= 350 long tons x 2,240	= 784,000 lbs

(a) Tensile stress at shaft threads undercut.

The tensile stress at the propeller nut shaft threads undercut is obtained by using (Eq-33a):

$$S_T = \frac{1.273 \times F_T}{D_u^2 - d^2} = \frac{1.273 \times 784,000}{9.25^2 - 5.00^2} = 16,479\ lb/in^2$$

(b) Factor of safety at shaft threads undercut.

The factor of safety at the propeller nut shaft threads undercut is obtained by using (Eq-33b):

$$FS_u = \frac{UT}{S_T} = \frac{95,000}{16,479} = 5.76$$

$5.76 \geq 1.50$; therefore the factor of safety is acceptable.

APPENDIX A

30.1.12 Summary of design results.

A summary of shaft stresses and factors of safety for all design points considered is tabulated in Table VIII.

Table VIII. Shaft stresses and factors of safety.

Station	3.00	20.00	76.00	117.00	135.00	273.00	637.00
OD	15.00	15.00	15.00	15.00	15.00	15.00	15.00
ID	10.00	10.00	10.00	10.00	10.00	10.00	10.00
YP	75,000	75,000	75,000	75,000	75,000	75,000	75,000
FL	47,500	47,500	47,500	47,500	47,500	47,500	47,500
Q_T	6,831,100	6,831,100	6,831,100	6,831,100	6,831,100	6,831,100	6,831,100
S_s	12,863	12,863	12,863	12,863	12,863	12,863	12,863
T_T	0	0	269,850	269,850	269,850	232,710	232,710
S_c	0	0	2,748.2	2,748.2	2,748.2	2,369.9	2,369.9
S_{sr}	25,726	25,726	25,872	25,872	25,872	25,835	25,835
M_T(max)	477	10,042	302,146	360,720	358,284	162,586	1,115,980
S_b	1.80	37.82	1,137.9	1,358.5	1,349.4	612.32	4,203
K_b	1.44	1.00	1.48	1.44	1.00	1.00	1.00
K_t	1.23	1.00	1.25	1.23	1.60	1.00	1.00
K_bS_b	2.59	37.82	1,684.1	1,956.2	1,349	612.32	4,203
S_{as}	643.15	643.15	643.15	643.15	643.15	643.15	643.15
S_{ar}	1,582.1	1,286.9	2,328.4	2,516.0	2,461	1,424.6	4,394.5
FS	2.65	2.70	2.54	2.51	2.52	2.67	2.29
FS(min required)	2.00	2.00	2.00	2.00	2.00	2.25	2.25

APPENDIX B

SAMPLE CALCULATIONS, SURFACE SHIP CONTROLLABLE PITCH PROPELLER SHAFTING SYSTEM

10. SCOPE

10.1 Scope. Sample calculations for checking the adequacy of the diameters of shafting in a controllable pitch propeller shafting system for a hypothetical twin propeller destroyer are presented in this Appendix. This Appendix is not a mandatory part of the standard. The information contained herein is intended for guidance only.

20. APPLICABLE DOCUMENTS. This section is not applicable to this Appendix.

30. NUMERICAL EXAMPLE.

30.1 Example requirement. It is required to check the diameters of a given controllable pitch propeller shafting system (see Figure 8) against the criteria of this military standard.

30.1.1 Ship information. Shafting and propeller data are as follows:

General Information.0

	Coupling bolt material	= MIL-S-24093
	Drive	= Gas turbine
PC	= Propulsive coefficient	= 0.63
RPM	= Propeller rotational speed	= 204 r/min
SHP	= Shaft horsepower	= 19,500 hp
t	= Thrust deduction factor	= 0.050
V	= Ship speed at full power	= 21.5 knots
W_p	= Weight of propeller in air	= 28,500 lbs
L_p	= Distance from aft face of propeller shaft flange to CG of propeller	= 17.70 inches

Line shaft

	Material	= MIL-S-23284, class 1
D_f	= Outside diameter of flange	= 22.4 inches
FL	= Fatigue limit	= 47,500 lb/in^2
ID	= Shaft inside diameter	= 9.25 inches
OD	= Shaft outside diameter	= 14.00 inches
r_f	= Radius of flange fillet	= 2.80 inches
YP	= Yield point	= 75,000 lb/in^2
ρ_{stl}	= Density of shaft material	= 0.284 lb/in^3

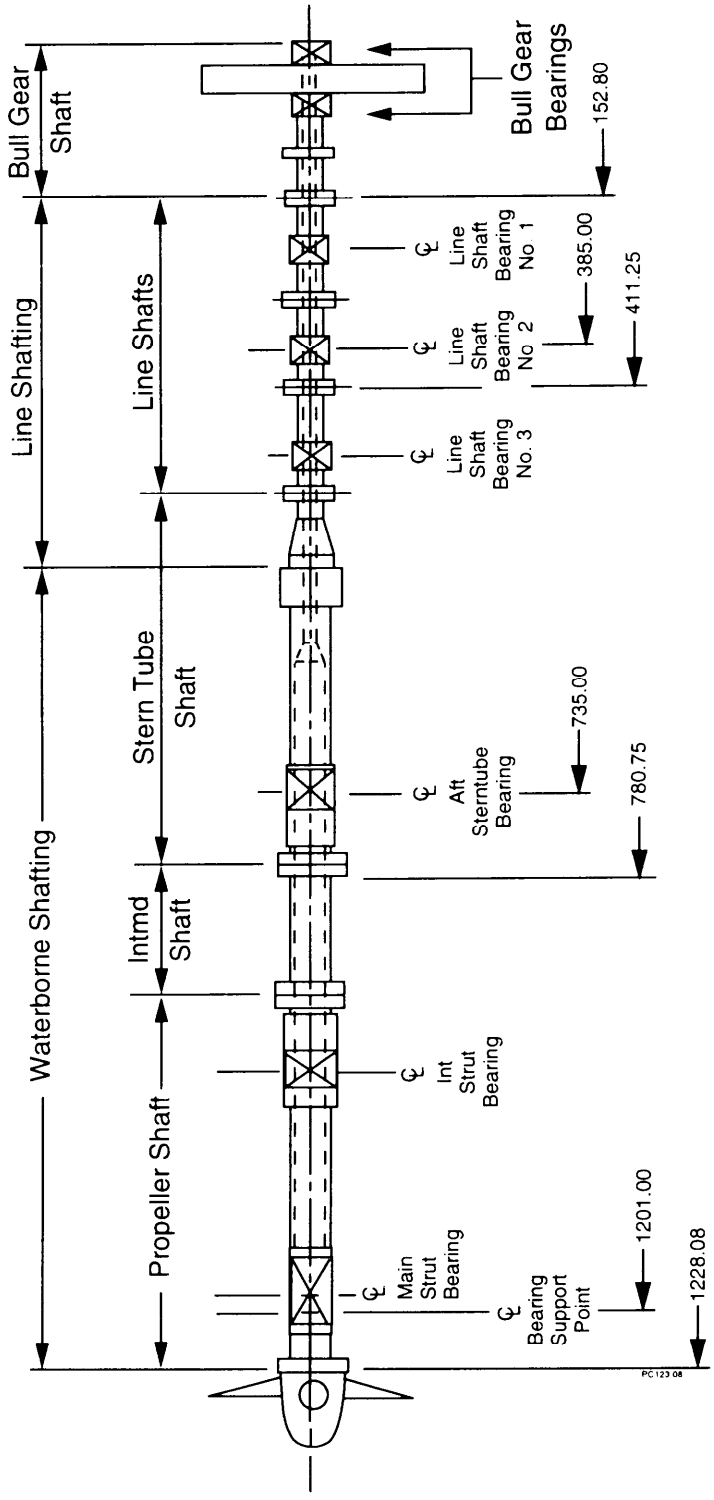

Note: Dimensions (station numbers) are in inches.

Figure 8. Controllable Pitch Propeller Shafting System

APPENDIX B

Waterborne shaft

	Material	= MIL-S-23284, class 3
D_f	= Outside diameter of flange	= 30.00 inches
D_{pf}	= Outside diameter of propeller shaft aft flange	= 45.00 inches
E	= Shaft modulus of elasticity	= 29,500,000 lb/in^2
E_b	= Shaft base material modulus of elasticity	= 29,500,000 lb/in^2
E_i	= Clad weld inlay material modulus of elasticity	= 25,000,000 lb/in^2
FL	= Fatigue limit	= 34,000 lb/in^2
FL_b	= Fatigue limit of base material	= 34,000 lb/in^2
FL_i	= Fatigue limit of clad weld inlay	= 25,000 lb/in^2
G_b	= Shaft base material shear modulus	= 11,750,000 lb/in^2
G_i	= Clad weld inlay material shear modulus	= 9,600,000 lb/in^2
ID	= Shaft inside diameter	= 12.50 inches
L_{pf}	= Length of propeller shaft aft flange	= 5.625 inches
L_{sl}	= Length of sleeve aft of design point at aftermost bearing	= 20.75 inches
L_{str}	= Straight shaft length aft of design point at aftermost bearing	= 27.075 inches
OD	= Shaft outside diameter	= 18.75 inches
OD_b	= Outside diameter of shaft base material	= 18.25 inches
OD_i	= Outside diameter of weld inlay	= 18.75
OD_{sl}	= Outside diameter of sleeve	= 20.375 inches
r_f	= Radius of flange fillet	= 3.75 inches
r_{pf}	= Radius of propeller shaft aft flange fillet	= 7.50 inches
UT	= Ultimate tensile strength	= 75,000 lb/in^2
YP	= Yield point	= 45,000 lb/in^2
YP_b	= Yield point of shaft base material	= 45,000 lb/in^2
YP_i	= Yield point of clad weld inlay	= 60,000 lb/in^2
ρ_{icw}	= Density of waterborne shaft bore internal components	= 0.046 lb/in^3
ρ_{sl}	= Density of sleeve material	= 0.323 lb/in^3
ρ_{stl}	= Density of shaft material	= 0.284 lb/in^3

APPENDIX B

30.1.2 Shaft alignment analysis results. A shaft alignment analysis was performed for the controllable pitch propeller shafting system shown in Figure 8 for all operating conditions. The values shown in Table IX represent the maximum bending moments that exist at each station throughout the operating range. Other information from the analysis, such as stress concentration factors, are introduced into the computation as needed.

Table IX. Surface ship controllable pitch propeller system gravity bending moments.

Station	Location[1]	Max Gravity bending moment, M_g (in-lb)	Cond.[2]
152.80	No. 1 line shaft forward flange	34,857	c
385.00	Line shaft bearing No. 2	287,919	b
411.25	No. 2 line shaft aft flange	81,011	d
735.00	Aft stern tube bearing	674,364	a
780.75	Intermediate shaft forward flange	244,352	a
1201.00	Prop bearing support point	1,528,900	a
1228.08	Propeller shaft aft flange fillet	671,450	a

[1] The shafting system stations were selected for illustrative purposes only and do not represent all stations required for stress and factor-of-safety analysis.

[2] Ship condition at which maximum bending moment occurs. See 5.4.2 for a complete listing of conditions that are required to be analyzed.

a) In air, straight line
b) Waterborne, machinery hot, aligned, no weardown
c) Waterborne, machinery cold, aligned, 100% collective weardown
d) Waterborne, machinery hot, aligned, 100% collective weardown

30.1.3 Station 152.80, No. 1 line shaft forward flange.

30.1.3.1 Steady stresses.

(a) Steady shear stress due to torque.

Full power torque is obtained using (Eq-1):

$$Q = \frac{63{,}025 \times SHP}{RPM} = \frac{63{,}025 \times 19{,}500}{204}$$

$= 6{,}024{,}400\ in\text{-}lb$

Torque at 120 percent of full power is obtained using (Eq-2a):

$$Q_T = 1.2 \times Q = 1.2 \times 6{,}024{,}400 = 7{,}229{,}300\ in\text{-}lb$$

Steady shear stress is obtained using (Eq-3b):

$$S_s = \frac{5.1 \times Q_T \times OD}{OD^4 - ID^4} = \frac{5.1 \times 7{,}229{,}300 \times 14.00}{14.00^4 - 9.25^4}$$

$$= 16{,}600\ lb/in^2$$

(b) Steady compressive stress due to thrust.

Effective horsepower is obtained using (Eq-4b):

$$EHP = SHP \times PC = 19{,}500 \times 0.63 = 12{,}285\ hp$$

Total thrust is obtained using (Eq-4a):

$$T_T = \frac{325.87 \times EHP}{V \times (1 - t)} = \frac{325.87 \times 12{,}285}{21.5 \times (1 - 0.05)} = 196{,}000\ lb$$

Steady compressive stress is obtained using (Eq-8):

$$S_c = \frac{1.273 \times T_T}{OD^2 - ID^2} = \frac{1.273 \times 196{,}000}{14.00^2 - 9.25^2} = 2{,}259.3\ lb/in^2$$

(c) Resultant steady stress.

The resultant steady stress is obtained as shown in (Eq-9):

$$S_{sr} = [S_c^2 + (2 \times S_s)^2]^{1/2}$$

$$= [2{,}259.3^2 + (2 \times 16{,}600)^2]^{1/2}$$

$$= 33{,}280\ lb/in^2$$

30.1.3.2 Alternating stresses.

(a) Gravity bending moment.

The gravity bending moment, M_g, is obtained from Table IX. Because this station is on line shafting, the total moment, M_T, is equal to the gravity moment (see Table II).

$$M_T = M_g = 34{,}857\ in\text{-}lb$$

(b) Bending stress.

The bending stress is obtained using (Eq-11b):

APPENDIX B

$$S_b = \frac{10.2 \times M_T \times OD}{OD^4 - ID^4} = \frac{10.2 \times 34{,}857 \times 14.00}{14.00^4 - 9.25^4}$$

$$= 160.08 \ lb/in^2$$

(c) Alternating torsional shear stress.

The alternating torsional shear stress is obtained using (Eq-12):

$$S_{as} = 0.05 \times S_s = 0.05 \times 16{,}600 = 830.0 \ lb/in^2$$

Note: The values determined by the detailed propulsion system vibration analysis shall be substituted in the design calculation if they are larger at the corresponding shaft *RPM* than the approximation given by (Eq-12).

(d) Stress concentration factors.

The stress concentration factors are obtained by using Figures 2 and 3.

$$\frac{r_f}{OD} = \frac{2.80}{14.00} = 0.20$$

$$\frac{D_f}{OD} = \frac{22.40}{14.00} = 1.60$$

$$K_b = 1.44$$

$$K_t = 1.23$$

(e) Resultant alternating stress.

The resultant alternating stress is obtained by combining the alternating bending and torsional shear stresses as shown in (Eq-13):

$$S_{ar} = [(K_b \times S_b)^2 + (2 \times K_t \times S_{as})^2]^{1/2}$$

$$= [(1.44 \times 160.08)^2 + (2 \times 1.23 \times 830.0)^2]^{1/2}$$

$$= 2{,}054.8 \ lb/in^2$$

30.1.3.3 Factor of safety.

The factor of safety is obtained by using (Eq-14b):

$$FS = \frac{1}{\frac{S_{ar}}{YP} + \frac{S_{ar}}{FL}} = \frac{1}{\frac{33{,}280}{75{,}000} + \frac{2{,}054.8}{47{,}500}} = 2.05 \geq 1.75$$

APPENDIX B

The factor of safety at station 152.80 is adequate (see Table III).

30.1.4 Station 385.00, line shaft bearing No. 2.

30.1.4.1 Steady stresses.

(a) Steady shear stress due to torque.

Full power torque is obtained using (Eq-1):

$$Q = \frac{63{,}025 \times SHP}{RPM} = \frac{63{,}025 \times 19{,}500}{204}$$

$$= 6{,}024{,}400 \ in\text{-}lb$$

Torque at 120 percent of full power is obtained using (Eq-2a):

$$Q_T = 1.2 \times Q = 1.2 \times 6{,}024{,}400 = 7{,}229{,}300 \ in\text{-}lb$$

Steady shear stress is obtained using (Eq-3b):

$$S_s = \frac{5.1 \times Q_T \times OD}{OD^4 - ID^4} = \frac{5.1 \times 7{,}229{,}300 \times 14.00}{14.00^4 - 9.25^4}$$

$$= 16{,}600 \ lb/in^2$$

(b) Steady compressive stress due to thrust.

Effective horsepower is obtained using (Eq-4b):

$$EHP = SHP \times PC = 19{,}500 \times 0.63 = 12{,}285 \ hp$$

Total thrust is obtained using (Eq-4a):

$$T_T = \frac{325.87 \times EHP}{V \times (1 - t)} = \frac{325.87 \times 12{,}285}{21.5 \times (1 - 0.05)} = 196{,}000 \ lb$$

Steady compressive stress is obtained using (Eq-8):

$$S_c = \frac{1.273 \times T_T}{OD^2 - ID^2} = \frac{1.273 \times 196{,}000}{14.00^2 - 9.25^2} = 2{,}259.3 \ lb/in^2$$

(c) Resultant steady stress.

The resultant steady stress is obtained as shown in (Eq-9):

$$S_{sr} = [S_c^2 + (2 \times S_s)^2]^{1/2}$$

$$= [2{,}259.3^2 + (2 \times 16{,}600)^2]^{1/2}$$

$$= 33{,}280 \ lb/in^2$$

APPENDIX B

30.1.4.2 Alternating stresses.

(a) Gravity bending moment.

The gravity bending moment, M_g, is obtained from Table IX. Because this station is on line shafting, the total moment, M_T, is equal to the gravity moment (see Table II).

$$M_T = M_g = 287{,}919 \ in\text{-}lb$$

(b) Bending stress.

The bending stress is obtained using (Eq-11b):

$$S_b = \frac{10.2 \times M_T \times OD}{OD^4 - ID^4} = \frac{10.2 \times 287{,}919 \times 14.00}{14.00^4 - 9.25^4}$$

$$= 1{,}322.2 \ lb/in^2$$

(c) Alternating torsional shear stress.

The alternating torsional shear stress is obtained using (Eq-12):

$$S_{as} = 0.05 \times S_s = 0.05 \times 16{,}600 = 830.0 \ lb/in^2$$

Note: The values determined by the detailed propulsion system vibration analysis shall be substituted in the design calculation if they are larger at the corresponding shaft *RPM* than the approximation given by (Eq-12).

(d) Stress concentration factors.

The stress concentration factors, K_b and K_t, equal 1.00 at this station.

(e) Resultant alternating stress.

The resultant alternating stress is obtained by combining the alternating bending and torsional shear stresses as shown in (Eq-13):

$$S_{ar} = [(K_b \times S_b)^2 + (2 \times K_t \times S_{as})^2]^{1/2}$$

$$= [(1.00 \times 1{,}322.2)^2 + (2 \times 1.00 \times 830.0)^2]^{1/2}$$

$$= 2{,}122.2 \ lb/in^2$$

30.1.4.3 Factor of safety.

The factor of safety is obtained by using (Eq-14b):

APPENDIX B

$$FS = \frac{1}{\frac{S_{ar}}{YP} + \frac{S_{ar}}{FL}} = \frac{1}{\frac{33,280}{75,000} + \frac{2,122.2}{47,500}} = 2.05 \geq 1.75$$

The factor of safety at station 385.00 is adequate (see Table III).

30.1.5 Station 411.25, No. 2 line shaft aft flange.

30.1.5.1 Steady stresses.

(a) Steady shear stress due to torque.

Full power torque is obtained using (Eq-1):

$$Q = \frac{63,025 \times SHP}{RPM} = \frac{63,025 \times 19,500}{204}$$

$$= 6,024,400 \ in\text{-}lb$$

Torque at 120 percent of full power is obtained using (Eq-2a):

$$Q_T = 1.2 \times Q = 1.2 \times 6,024,400 = 7,229,300 \ in\text{-}lb$$

Steady shear stress is obtained using (Eq-3b):

$$S_s = \frac{5.1 \times Q_T \times OD}{OD^4 - ID^4} = \frac{5.1 \times 7,229,300 \times 14.00}{14.00^4 - 9.25^4}$$

$$= 16,600 \ lb/in^2$$

(b) Steady compressive stress due to thrust.

Effective horsepower is obtained using (Eq-4b):

$$EHP = SHP \times PC = 19,500 \times 0.63 = 12,285 \ hp$$

Total thrust is obtained using (Eq-4a):

$$T_T = \frac{325.87 \times EHP}{V \times (1 - t)} = \frac{325.87 \times 12,285}{21.5 \times (1 - 0.05)} = 196,000 \ lb$$

Steady compressive stress is obtained using (Eq-8):

$$S_c = \frac{1.273 \times T_T}{OD^2 - ID^2} = \frac{1.273 \times 196,000}{14.00^2 - 9.25^2} = 2,259.3 \ lb/in^2$$

(c) Resultant steady stress.

The resultant steady stress is obtained as shown in (Eq-9):

APPENDIX B

$$S_{ar} = [S_c^2 + (2 \times S_s)^2]^{1/2}$$

$$= [2{,}259.3^2 + (2 \times 16{,}600)^2]^{1/2}$$

$$= 33{,}280 \ lb/in^2$$

30.1.5.2 Alternating stresses.

(a) Gravity bending moment.

The gravity bending moment, M_g, is obtained from Table IX. Because this station is on line shafting, the total moment, M_T, is equal to the gravity moment (see Table II).

$$M_T = M_g = 81{,}011 \ in\text{-}lb$$

(b) Bending stress.

The bending stress is obtained using (Eq-11b):

$$S_b = \frac{10.2 \times M_T \times OD}{OD^4 - ID^4} = \frac{10.2 \times 81{,}011 \times 14.00}{14.00^4 - 9.25^4}$$

$$= 372.03 \ lb/in^2$$

(c) Alternating torsional shear stress.

The alternating torsional shear stress is obtained using (Eq-12):

$$S_{as} = 0.05 \times S_s = 0.05 \times 16{,}600 = 830.0 \ lb/in^2$$

Note: The values determined by the detailed propulsion system vibration analysis shall be substituted in the design calculation if they are larger at the corresponding shaft *RPM* than the approximation given by (Eq-12).

(d) Stress concentration factors.

The stress concentration factors are obtained by using Figures 2 and 3.

$$\frac{r_f}{OD} = \frac{2.80}{14.00} = 0.20$$

$$\frac{D_f}{OD} = \frac{22.40}{14.00} = 1.60$$

$$K_b = 1.44$$

$$K_t = 1.23$$

APPENDIX B

(e) Resultant alternating stress.

The resultant alternating stress is obtained by combining the alternating bending and torsional shear stresses as shown in (Eq-13):

$$\bar{S}_{ar} = [(\bar{K}_b \times \bar{S}_b)^2 + (2 \times \bar{K}_t \times \bar{S}_{as})^2]^{1/2}$$

$$= [(1.44 \times 372.03)^2 + (2 \times 1.23 \times 830.0)^2]^{1/2}$$

$$= 2{,}110.9 \ lb/in^2$$

30.1.5.3 Factor of safety.

The factor of safety is obtained by using (Eq-14b):

$$FS = \frac{1}{\frac{S_{ar}}{YP} + \frac{S_{ar}}{FL}} = \frac{1}{\frac{33{,}280}{75{,}000} + \frac{2{,}110.9}{47{,}500}} = 2.05 \geq 1.75$$

The factor of safety at station 411.25 is adequate (see Table III).

30.1.6 Station 1201.00, propeller bearing support point.

30.1.6.1 Steady stresses.

(a) Steady shear stress due to torque.

Full power torque is obtained using (Eq-1):

$$Q = \frac{63{,}025 \times SHP}{RPM} = \frac{63{,}025 \times 19{,}500}{204}$$

$$= 6{,}024{,}400 \ in\text{-}lb$$

Torque at 120 percent of full power is obtained using (Eq-2a):

$$Q_T = 1.2 \times Q = 1.2 \times 6{,}024{,}400 = 7{,}229{,}300 \ in\text{-}lb$$

Steady shear stress is obtained using (Eq-3b):

$$S_s = \frac{5.1 \times Q_T \times OD}{OD^4 - ID^4} = \frac{5.1 \times 7{,}229{,}300 \times 18.75}{18.75^4 - 12.50^4}$$

$$= 6{,}970.0 \ lb/in^2$$

(b) Steady compressive stress due to thrust.

Effective horsepower is obtained using (Eq-4b):

$$EHP = SHP \times PC = 19{,}500 \times 0.63 = 12{,}285 \ hp$$

APPENDIX B

Total thrust is obtained using (Eq-4a):

$$T_T = \frac{325.87 \times EHP}{V \times (1 - t)} = \frac{325.87 \times 12,285}{21.5 \times (1 - 0.05)} = 196,000\ lb$$

Steady compressive stress is obtained using (Eq-8):

$$S_c = \frac{1.273 \times T_T}{OD^2 - ID^2} = \frac{1.273 \times 196,000}{18.75^2 - 12.50^2} = 1,277.5\ lb/in^2$$

(c) Resultant steady stress.

The resultant steady stress is obtained as shown in (Eq-9):

$$S_{sr} = [S_c^2 + (2 \times S_s)^2]^{1/2}$$

$$= [1,277.5^2 + (2 \times 6,970.0)^2]^{1/2}$$

$$= 13,998\ lb/in^2$$

30.1.6.2 Alternating stresses.

(a) Gravity bending moment.

The gravity bending moment, M_p, at the aftermost bearing support point, due to the overhanging weight of the propeller and shafting in air, is calculated in the following tabulated procedure (see Figure 9). This moment calculation is intended to verify the moment obtained by the alignment analysis (see Table IX) and will be used for the stress analysis at this station.

(1) Sleeve (aft of support point):

Weight:

$$W_{sl} = \rho_{sl} \times \frac{\pi}{4} \times (OD_{sl}^2 - OD^2) \times L_{sl}$$

$$= 0.323 \times 0.7854 \times (20.375^2 - 18.75^2) \times 20.75$$

$$= 334.67\ lbs$$

Moment arm:

$$X_{sl} = \frac{L_{sl}}{2} = \frac{20.75}{2} = 10.375\ inches$$

(2) Shaft straight section (aft of support point):

Weight:

$$W_{str} = \rho_{stl} \times \frac{\pi}{4} \times (OD^2 - ID^2) \times L_{str}$$

APPENDIX B

$$= 0.284 \times 0.7854 \times (18.75^2 - 12.50^2) \times 27.075$$

$$= 1{,}179.5 \ lbs$$

Moment arm:

$$X_{str} = \frac{L_{str}}{2} = \frac{27.075}{2} = 13.538 \ inches$$

(3) Propeller shaft flange:

Weight:

$$W_{pf} = \rho_{stl} \times \frac{\pi}{4} \times (D_{pf}^2 - ID^2) \times L_{pf}$$

$$= 0.284 \times 0.7854 \times (45.00^2 - 12.50^2) \times 5.625$$

$$= 2{,}344.7 \ lbs$$

Moment arm:

$$X_{pf} = \frac{L_{pf}}{2} + L_{str} = \frac{5.625}{2} + 27.075 = 29.888 \ inches$$

(4) Shaft bore internal component:

Weight:

$$W_{ic} = \rho_{icw} \times \frac{\pi}{4} \times ID^2 \times (L_{str} + L_{pf})$$

$$= 0.046 \times 0.7854 \times 12.50^2 \times (27.075 + 5.625)$$

$$= 184.59 \ lbs$$

Moment arm:

$$\bar{X}_{ic} = \frac{L_{str} + L_{pf}}{2} = \frac{27.075 + 5.625}{2} = 16.35 \ inches$$

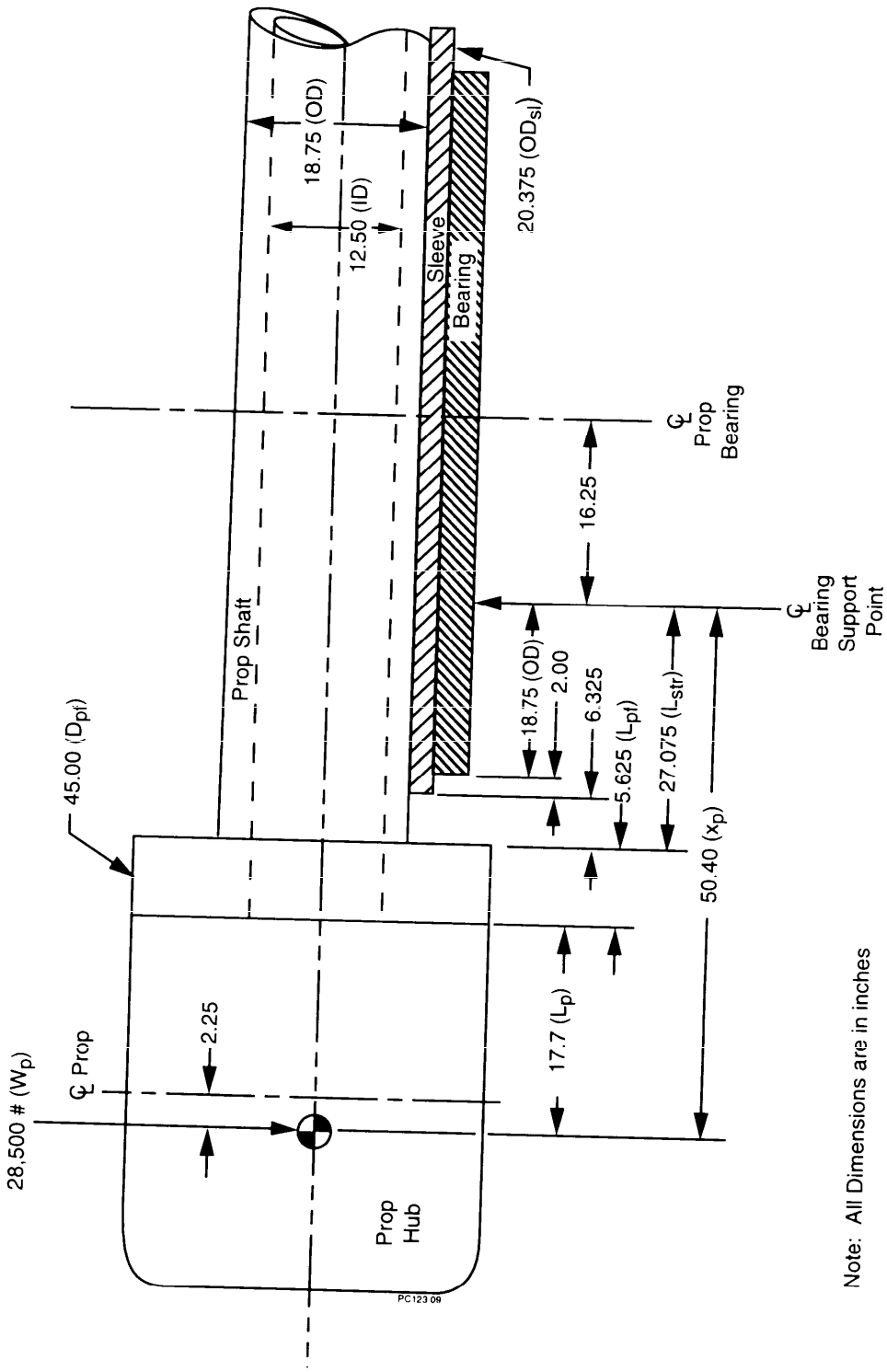

Note: All Dimensions are in inches

Figure 9. Controllable Pitch Propeller Shafting System: Aftermost Bearing Support Point.

APPENDIX B

Table X Tabulation of overhung gravity bending moment, M_p, at station 1201.00.

Shaft Component	Weight W_{ii} (pound)	Moment Arm X_{ii} (inch)	Moment W_{ii} x X_{ii} (in-lb)
Sleeve	W_{sl} = 334.67	X_{sl} = 10.375	3,472
Straight section	W_{str} = 1,179.50	X_{str} = 13.538	15,968
Shaft flange	W_{pf} = 2,344.70	X_{pf} = 29.888	70,078
Propeller	W_p = 28,500.00	X_p = 50.400	1,436,400
Internal Comp.	W_{ic} = 184.59	X_{ic} = 16.350	3,018
Total overhung bending moment, M_p =			1,528,936

The above calculation, as tabulated in Table X, is for the in-air condition and is to be used for the offcenter moment, M_{oc}, for in-air conditions only. A separate calculation is required to determine the gravity bending and offcenter moments for waterborne conditions.

Since this design example is for a strut-supported surface ship, the total moment at the aftermost bearing support point, M_T, is equal to the offcenter moment, M_{oc}, plus the overhung gravity bending moment, M_p (see Table II).

$$M_{oc} = M_p = 1{,}528{,}936 \ in\text{-}lb$$

$$M_T = M_{oc} + M_p = 2 \times 1{,}528{,}936 = 3{,}057{,}872 \ in\text{-}lb$$

(b) Bending stress.

The bending stress is obtained using (Eq-11b):

$$S_b = \frac{10.2 \times M_T \times OD}{OD^4 - ID^4} = \frac{10.2 \times 3{,}057{,}872 \times 18.75}{18.75^4 - 12.50^4}$$

$$= 5{,}896.4 \ lb/in^2$$

(c) Stress concentration factors:

The stress concentration factors, K_b and K_t, equal 1.00 at this station.

(d) Maximum bending stress.

The maximum bending stress, K_b x S_b, at this station must be compared to the maximum allowable (see 4.20).

APPENDIX B

$$K_b \times S_b = 1.00 \times 5{,}896.4$$

$$= 5{,}896.4\ lb/in^2 \leq 6{,}000\ lb/in^2\ \textbf{maximum allowable}$$

(e) Alternating torsional shear stress.

The alternating torsional shear stress is obtained using (Eq-12):

$$S_{as} = 0.05 \times S_s = 0.05 \times 6{,}970.0 = 348.5\ lb/in^2$$

Note: The values determined by the detailed propulsion system vibration analysis shall be substituted in the design calculation if they are larger at the corresponding shaft *RPM* than the approximation given by (Eq-12).

(f) Resultant alternating stress.

The resultant alternating stress is obtained by combining the alternating bending and torsional shear stresses as shown in (Eq-13):

$$S_{ar} = [(K_b \times S_b)^2 + (2 \times K_t \times S_{as})^2]^{1/2}$$

$$= [(1.00 \times 5{,}896.4)^2 + (2 \times 1.00 \times 348.5)^2]^{1/2}$$

$$= 5{,}937.5\ lb/in^2$$

30.1.6.3 Factor of safety.

The factor of safety is obtained by using (Eq-14b):

$$FS = \frac{1}{\frac{S_{ar}}{YP} + \frac{S_{ar}}{FL}} = \frac{1}{\frac{13{,}998}{45{,}000} + \frac{5{,}937.5}{34{,}000}} = 2.06 \geq 2.00$$

The factor of safety at station 1201.00 is adequate (see Table III).

30.1.7 Station 735.00, aft stern tube bearing.

30.1.7.1 Steady stresses.

(a) Steady shear stress due to torque.

Full power torque is obtained using (Eq-1):

$$Q = \frac{63{,}025 \times SHP}{RPM} = \frac{63{,}025 \times 19{,}500}{204}$$

$$= 6{,}024{,}400\ in\text{-}lb$$

APPENDIX B

Torque at 120 percent of full power is obtained using (Eq-2a):

$$Q_T = 1.2 \times Q = 1.2 \times 6{,}024{,}400 = 7{,}229{,}300 \ in\text{-}lb$$

Steady shear stress is obtained using (Eq-3b):

$$S_s = \frac{5.1 \times Q_T \times OD}{OD^4 - ID^4} = \frac{5.1 \times 7{,}229{,}300 \times 18.75}{18.75^4 - 12.50^4}$$

$$= 6{,}970.0 \ lb/in^2$$

(b) Steady compressive stress due to thrust.

Effective horsepower is obtained using (Eq-4b):

$$EHP = SHP \times PC = 19{,}500 \times 0.63 = 12{,}285 \ hp$$

Total thrust is obtained using (Eq-4a):

$$T_T = \frac{325.87 \times EHP}{V \times (1 - t)} = \frac{325.87 \times 12{,}285}{21.5 \times (1 - 0.05)} = 196{,}000 \ lb$$

Steady compressive stress is obtained using (Eq-8):

$$S_c = \frac{1.273 \times T_T}{OD^2 - ID^2} = \frac{1.273 \times 196{,}000}{18.75^2 - 12.50^2}$$

$$= 1{,}277.5 \ lb/in^2$$

(c) Resultant steady stress.

The resultant steady stress is obtained as shown in (Eq-9):

$$S_{sr} = [S_c^2 + (2 \times S_s)^2]^{1/2}$$

$$= [1{,}277.5^2 + (2 \times 6{,}970.0)^2]^{1/2}$$

$$= 13{,}998 \ lb/in^2$$

30.1.7.2 Alternating stresses.

(a) Gravity bending moment.

The gravity bending moment, M_g, is obtained from Table IX. Because this is a strut-supported surface ship and this station is on waterborne shafting, the total moment, M_T, is equal to the gravity moment plus the off-center moment, M_{oc}, (see Table II).

$$M_T = M_g + M_{oc} = 674{,}364 + 1{,}528{,}936$$

$$= 2{,}203{,}300 \ in\text{-}lb$$

APPENDIX B

(b) Bending stress.

The bending stress is obtained using (Eq-11b):

$$S_b = \frac{10.2 \times M_T \times OD}{OD^4 - ID^4} = \frac{10.2 \times 2{,}203{,}300 \times 18.75}{18.75^4 - 12.50^4}$$

$$= 4{,}248.6 \ lb/in^2$$

(c) Stress concentration factors.

The stress concentration factors, K_b and K_t, equal 1.00 at this station.

(d) Maximum bending stress.

The maximum bending stress, K_b x S_b, at this station must be compared to the maximum allowable (see 4.20).

$$K_b \times S_b = 1.00 \times 4{,}248.6$$

$$= 4{,}248.6 \ lb/in^2 \leq 6{,}000 \ lb/in^2 \ \textbf{maximum allowable}$$

(e) Alternating torsional shear stress.

The alternating torsional shear stress is obtained using (Eq-12):

$$S_{as} = 0.05 \times S_s = 0.05 \times 6{,}970.0 = 348.5 \ lb/in^2$$

Note: The values determined by the detailed propulsion system vibration analysis shall be substituted in the design calculation if they are larger at the corresponding shaft *RPM* than the approximation given by (Eq-12).

(f) Resultant alternating stress.

The resultant alternating stress is obtained by combining the alternating bending and torsional shear stress as shown in (Eq-13):

$$S_{ar} = [(K_b \times S_b)^2 + (2 \times K_t \times S_{as})^2]^{1/2}$$

$$= [(1.00 \times 4{,}248.6)^2 + (2 \times 1.00 \times 348.5)^2]^{1/2}$$

$$= 4{,}305.4 \ lb/in^2$$

30.1.7.3 Factor of Safety.

The factor of safety is obtained by using (Eq-14b):

$$FS = \frac{1}{\frac{S_{sr}}{YP} + \frac{S_{ar}}{FL}} = \frac{1}{\frac{13{,}998}{45{,}000} + \frac{4{,}305.4}{34{,}000}} = 2.28 \geq 2.00$$

APPENDIX B

The factor of safety at station 735.00 is adequate (see Table III).

30.1.8 Station 780.75, intermediate shaft forward flange.

30.1.8.1 Steady stresses.

(a) Steady shear stress due to torque:

Full power torque is obtained using (Eq-1):

$$Q = \frac{63{,}025 \times SHP}{RPM} = \frac{63{,}025 \times 19{,}500}{204}$$

$$= 6{,}024{,}400 \ in\text{-}lb$$

Torque at 120 percent of full power is obtained using (Eq-2a):

$$Q_T = 1.2 \times Q = 1.2 \times 6{,}024{,}400 = 7{,}229{,}300 \ in\text{-}lb$$

Steady shear stress is obtained using (Eq-3b):

$$S_s = \frac{5.1 \times Q_T \times OD}{OD^4 - ID^4} = \frac{5.1 \times 7{,}229{,}300 \times 18.75}{18.75^4 - 12.50^4}$$

$$= 6{,}970.0 \ lb/in^2$$

(b) Steady compressive stress due to thrust.

Effective horsepower is obtained using (Eq-4b):

$$EHP = SHP \times PC = 19{,}500 \times 0.63 = 12{,}285 \ hp$$

Total thrust is obtained using (Eq-4a):

$$T_T = \frac{325.87 \times EHP}{V \times (1 - t)} = \frac{325.87 \times 12{,}285}{21.5 \times (1 - 0.05)} = 196{,}000 \ lb$$

Steady compressive stress is obtained using (Eq-8):

$$S_c = \frac{1.273 \times T_T}{OD^2 - ID^2} = \frac{1.273 \times 196{,}000}{18.75^2 - 12.50^2}$$

$$= 1{,}277.5 \ lb/in^2$$

(c) Resultant steady stress.

The resultant steady stress is obtained as shown in (Eq-9):

$$S_{sr} = [S_c^2 + (2 \times S_s)^2]^{1/2}$$

APPENDIX B

$$= [1{,}277.5^2 + (2 \times 6{,}970.0)^2]^{1/2}$$

$$= 13{,}998 \ lb/in^2$$

30.1.8.2 Alternating stresses.

(a) Gravity bending moment.

The gravity bending moment, M_g, is obtained from Table IX. Because this is a strut-supported surface ship and this station is on waterborne shafting, the total moment, M_T, is equal to the gravity moment plus the off-center moment, M_{oc}, (see Table II).

$$M_T = M_g + M_{oc} = 244{,}352 + 1{,}528{,}936 = 1{,}773{,}288 \ in\text{-}lb$$

(b) Bending stress.

The bending stress is obtained using (Eq-11b):

$$S_b = \frac{10.2 \times M_T \times OD}{OD^4 - ID^4} = \frac{10.2 \times 1{,}773{,}288 \times 18.75}{18.75^4 - 12.50^4}$$

$$= 3{,}419.4 \ lb/in^2$$

(c) Stress concentration factors.

The stress concentration factors are obtained by using Figures 2 and 3.

$$\frac{r_f}{OD} = \frac{3.75}{18.75} = 0.20$$

$$\frac{D_f}{OD} = \frac{30.00}{18.75} = 1.60$$

$$K_b = 1.44$$

$$K_t = 1.23$$

(d) Maximum bending stress.

The maximum bending stress, K_b x S_b, at this station must be compared to the maximum allowable (see 4.20).

$$K_b \times S_b = 1.44 \times 3{,}419.4$$

$$= 4{,}923.9 \ lb/in^2 \leq 6{,}000 \ lb/in^2 \ \textbf{maximum allowable}$$

(e) Alternating torsional shear stress.

APPENDIX B

The alternating torsional shear stress is obtained using (Eq-12):

$$S_{as} = 0.05 \times S_s = 0.05 \times 6{,}970.0 = 348.5 \ lb/in^2$$

Note: The values determined by the detailed propulsion system vibration analysis shall be substituted in the design calculation if they are larger at the corresponding shaft *RPM* than the approximation given by (Eq-12).

(f) Resultant alternating stress.

The resultant alternating stress is obtained by combining the alternating bending and torsional shear stress as shown in (Eq-13):

$$S_{ar} = [(K_b \times S_b)^2 + (2 \times K_t \times S_{as})^2]^{1/2}$$

$$= [(1.44 \times 3{,}419.4)^2 + (2 \times 1.23 \times 348.5)^2]^{1/2}$$

$$= 4{,}998.0 \ lb/in^2$$

30.1.8.3 Factor of safety.

The factor of safety is obtained by using (Eq-14b):

$$FS = \frac{1}{\frac{S_{sr}}{YP} + \frac{S_{ar}}{FL}} = \frac{1}{\frac{13{,}998}{45{,}000} + \frac{4{,}998.0}{34{,}000}} = 2.18 \geq 2.00$$

The factor of safety at station 780.75 is adequate (see Table III).

30.1.9 Station 1228.08, propeller shaft aft flange fillet.

Because of the welded inconel inlay at this station, the shaft will be analyzed as nonhomogeneous.

30.1.9.1 Steady stresses.

The polar moments of inertia of the clad weld inlay material, J_i, and shaft base material, J_b, are obtained using (Eq-16a) and (Eq-16b).

$$J_i = \frac{\pi \times (OD_i^4 - OD_b^4)}{32} = \frac{3.1416 \times (18.75^4 - 18.25^4)}{32}$$

$$= 1{,}243.4 \ in^4$$

$$J_b = \frac{\pi \times (OD_b^4 - ID^4)}{32} = \frac{3.1416 \times (18.25^4 - 12.50^4)}{32}$$

APPENDIX B

$= 8,493.7\ in^4$

The cross-sectional area of the clad weld inlay is obtained as follows:

$$A_i = \frac{\pi}{4} \times (OD_i^2 - OD_b^2)$$

$$= 0.7854 \times (18.75^2 - 18.25^2)$$

$$= 14.530\ in^2$$

The cross-sectional area of the shaft base material is obtained as follows:

$$A_b = \frac{\pi}{4} \times (OD_b^2 - ID^2 = 0.7854 \times (18.25^2 - 12.50^2)$$

$$= 138.87\ in^2$$

(a) Steady shear stress due to torque.

Full power torque is obtained using (Eq-1):

$$Q = \frac{63,025 \times SHP}{RPM} = \frac{63,025 \times 19,500}{204}$$

$$= 6,024,400\ in\text{-}lb$$

Torque at 120 percent of full power is obtained using (Eq-2a):

$$Q_T = 1.2 \times Q = 1.2 \times 6,024,400 = 7,229,300\ in\text{-}lb$$

Steady shear stress at outer surface of clad weld inlay is obtained using (Eq-15a).

$$S_{si} = \frac{Q_T \times OD_i \times G_i}{2 \times [(J_i \times G_i) + (J_b \times G_b)]}$$

$$= \frac{7,229,300 \times 18.75 \times 9,600,000}{2 \times [(1,243.4 \times 9,600,000) + (8,493.7 \times 11,750,000)]}$$

$$= 5,822.9\ lb/in^2$$

Steady shear stress at interface of clad weld inlay and shaft base material is obtained using (Eq-15b).

$$S_{sb} = \frac{Q_T \times OD_b \times G_b}{2 \times [(J_i \times G_i) + (J_b \times G_b)]}$$

$$= \frac{7,229,300 \times 18.25 \times 11,750,000}{2 \times [(1,243.4 \times 9,600,000) + (8,493.7 \times 11,750,000)]}$$

$= 6,936.9\ lb/in^2$

(b) Steady compressive stress due to thrust.

Effective horsepower is obtained using (Eq-4b):

$$EHP = SHP \times PC = 19,500 \times 0.63 = 12,285\ hp$$

Total thrust is obtained using (Eq-4a):

$$T_T = \frac{325.87 \times EHP}{V \times (1 - t)} = \frac{325.87 \times 12,285}{21.5 \times (1 - 0.05)} = 196,000\ lb$$

Steady compressive stress at outer surface of clad weld inlay is obtained using (Eq-17a).

$$S_{ci} = \frac{T_T \times E_i}{(A_i \times E_i) + (A_b \times E_b)}$$

$$= \frac{196,000 \times 25,000,000}{(14.530 \times 25,000,000) + (138.87 \times 29,500,000)}$$

$$= 1,098.7\ lb/in^2$$

Steady compressive stress at interface of clad weld inlay and shaft base material is obtained using (Eq-17b).

$$S_{cb} = \frac{T_T \times E_b}{(A_i \times E_i) + (A_b \times E_b)}$$

$$= \frac{196,000 \times 29,500,000}{(14.530 \times 25,000,000) + (138.87 \times 29,500,000)}$$

$$= 1,296.4\ lb/in^2$$

(c) Resultant steady stress.

Resultant steady stress at outer surface of clad weld inlay is obtained using (Eq-18a).

$$S_{sri} = [S_{ci}^2 + (2 \times S_{si})^2]^{1/2}$$

$$= [1,098.7^2 + (2 \times 5,822.9)^2]^{1/2}$$

$$= 11,698\ lb/in^2$$

Resultant steady stress at interface of clad weld inlay and shaft base material is obtained using (Eq-18b).

$$S_{srb} = [S_{cb}^2 + (2 \times S_{sb})^2]^{1/2}$$

$$= [1,296.4^2 + (2 \times 6,936.9)^2]^{1/2}$$

APPENDIX B

$= 13,934\ lb/in^2$

30.1.9.2 Alternating stresses.

The area moments of inertia of the clad weld inaly material, I_i, and shaft base material, I_b, are obtained using (Eq-20a) and (Eq-20b).

$$I_i = \frac{\pi \times (OD_i^4 - OD_b^4)}{64} = \frac{3.1416 \times (18.75^4 - 18.25^4)}{64}$$

$$= 621.72\ in^4$$

$$I_b = \frac{\pi \times (OD_b^4 - ID^4)}{64} = \frac{3.1416 \times (18.25^4 - 12.50^4)}{64}$$

$$= 4,246.9\ in^4$$

(a) Gravity bending moment.

The gravity bending moment, Mg, at the propeller flange fillet, due to the overhanging weight of the propeller and flange in air, is calculated in the following tabulated procedure (see figure 9). This moment calculation is intended to verify the moment obtained by the alignment analysis (see Table IX) and will be used for the stress analysis at this station.

(1) Propeller shaft flange:

Weight:

$$W_{pf} = \rho_{stl} \times \frac{\pi}{4} \times (D_{pf}^2 - ID^2) \times L_{pf}$$

$$= 0.284 \times 0.7854 \times (45.00^2 - 12.50^2) \times 5.625$$

$$= 2,344.7\ lbs$$

Moment arm:

$$X_{pf} = \frac{L_{pf}}{2} = \frac{5.625}{2} = 2.813\ inches$$

(2) Shaft bore internal components:

Weight:

$$W_{ic} = \rho_{icw} \times \frac{\pi}{4} \times ID^2 \times L_{pf}$$

$$= 0.046 \times 0.7854 \times 12.50^2 \times 5.625$$

$$= 31.75\ lbs$$

APPENDIX B

Moment arm:

$$X_{ic} = \frac{L_{pf}}{2} = \frac{5.625}{2} = 2.813 \text{ inches}$$

Table XI. Tabulation of overhung gravity bending moment, M_g, at station 1228.08.

Shaft Component	Weight W_{ii} (pound)	Moment Arm X_{ii} (inch)	Moment W_{ii} x X_{ii} (in-lb)
Shaft flange	W_{pf} = 2,344.70	2.813	6,596
Propeller	W_p = 28,500.00	23.325	664,763
Internal Comp.	W_{ic} = 31.75	2.813	89
Total overhung bending moment, M_g =			671,448

The above calculation, as tabulated in Table XI, is for the in-air condition and is to be used for the gravity bending moment, M_g. A separate calculation is required to determine the gravity bending moment for waterborne conditions.

Since this design example is for a strut-supported surface ship, the total moment at the propeller flange fillet, M_T, is equal to the gravity moment plus the in-air off-center moment, M_{oc}, (see Table II).

$$M_T = M_g + M_{oc} = 671,448 + 1,528,936$$

$$= 2,200,384 \text{ in-lb}$$

(b) Bending stress.

Bending stress at outer surface of clad weld inlay is obtained using (Eq-19a).

$$S_{bi} = \frac{M_T \times OD_i \times E_i}{2 \times [(E_i \times I_i) + (E_b \times I_b)]}$$

$$= \frac{2,200,384 \times 18.75 \times 25,000,000}{2 \times [(25,000,000 \times 621.72) + (29,500,000 \times 4,246.9)]}$$

$$= 3,662.1 \text{ lb/in}^2$$

Bending stress at interface of clad weld inlay and shaft base material is obtained using (Eq-19b).

APPENDIX B

$$S_{bb} = \frac{M_T \times OD_b \times E_b}{2 \times [(E_i \times I_i) + (E_b \times I_b)]}$$

$$= \frac{2{,}200{,}384 \times 18.25 \times 29{,}500{,}000}{2 \times [(25{,}000{,}000 \times 621.72) + (29{,}500{,}000 \times 4{,}246.9)]}$$

$$= 4{,}206.0 \ lb/in^2$$

(c) Stress concentration factors.

The stress concentration factors are obtained by using Figures 2 and 3.

$$\frac{r_{pf}}{OD} = \frac{7.50}{18.75} = 0.40$$

$$\frac{D_{pf}}{OD} = \frac{45.00}{18.75} = 2.40$$

$$K_b = 1.275$$

$$K_t = 1.115$$

(d) Maximum bending stress.

The maximum bending stress at outer surface of clad weld inlay material, K_b x S_{bi}, must be compared to the maximum allowable (see 4.20).

$$K_b \times S_{bi} = 1.275 \times 3{,}662.1$$

$$= 4{,}669.2 \ lb/in^2 \leq 12{,}000 \ lb/in^2 \ \textit{maximum allowable}$$

The maximum bending stress at interface of clad weld inlay and shaft base material, K_b x S_{bb}, must also be compared to the maximum allowable (see 4.20).

$$K_b \times S_{bb} = 1.275 \times 4{,}206.0$$

$$= 5{,}362.7 \ lb/in^2 \leq 6{,}000 \ lb/in^2 \ \textit{maximum allowable}$$

(e) Alternating torsional shear stress.

The alternating torsional shear stress at outer surface of clad weld inlay is obtained using (Eq-21a):

$$S_{asi} = 0.05 \times S_{si} = 0.05 \times 5{,}822.9 = 291.15 \ lb/in^2$$

The alternating torsional shear stress at interface of clad weld inlay and shaft base material is obtained using (Eq-21b):

$$S_{asb} = 0.05 \times S_{sb} = 0.05 \times 6{,}936.9 = 346.85 \ lb/in^2$$

APPENDIX B

Note: The values determined by the detailed propulsion system vibration analysis shall be substituted in the design calculation if they are larger at the corresponding shaft *RPM* than the approximation given by (Eq-21a) and (Eq-21b).

(f) Resultant alternating stress.

The resultant alternating stress at outer surface of clad weld inlay is obtained using (Eq-22a).

$$S_{ari} = [(K_b \times S_{bi})^2 + (2 \times K_t \times S_{asi})^2]^{1/2}$$

$$= [(1.275 \times 3{,}662.1)^2 + (2 \times 1.115 \times 291.15)^2]^{1/2}$$

$$= 4{,}714.1 \ lb/in^2$$

The resultant alternating stress at interface of clad weld inlay and shaft base material is obtained using (Eq-22b).

$$S_{arb} = [(K_b \times S_{bb})^2 + (2 \times K_t \times S_{asb})^2]^{1/2}$$

$$= [(1.275 \times 4{,}206.0)^2 + (2 \times 1.115 \times 346.85)^2]^{1/2}$$

$$= 5{,}418.1 \ lb/in^2$$

30.1.9.3 Factor of safety.

The factor of safety at outer surface of clad weld inlay is obtained using (Eq-23a)

$$FS_i = \frac{1}{\frac{S_{ari}}{YP_i} + \frac{S_{ari}}{FL_i}} = \frac{1}{\frac{11{,}698}{60{,}000} + \frac{4{,}714.1}{25{,}000}} = 2.61 \geq 2.00$$

The factor of safety at interface of clad weld inlay and shaft base material is obtained using (Eq-23b).

$$FS_b = \frac{1}{\frac{S_{arb}}{YP_b} + \frac{S_{arb}}{FL_b}} = \frac{1}{\frac{13{,}934}{45{,}000} + \frac{5{,}418.1}{34{,}000}} = 2.13 \geq 2.00$$

The factor of safety at station 1228.08 for the clad weld inlay and shaft base material is adequate (see Table III).

30.1.10 Shafting components.

30.1.10.1 Bolt design, waterborne shafting flange.

	Coupling bolt material	= MIL-S-24093
D_b	= Diameter of coupling bolt	= 2.34 inches
D_{bc}	= Bolt circle diameter	= 26.06 inches

APPENDIX B

N_b = Number of bolts = 12
Q_T = Total torque = 7,229,300 in-lb

A_{bt} = Bolt cross-sectional area at parting surface

$$= \frac{\pi}{4} \times D_b^2 = 0.7854 \times 2.34^2 \qquad = 4.3005\ in^2$$

S_{bt} = Shear stress of shaft coupling bolts (maximum allowable)

$$= \frac{\left(\frac{YP}{2}\right)}{FS}$$

$$= \frac{\left(\frac{100,000}{2}\right)}{2.00} \qquad = 25,000\ lb/in^2$$

(a) Shear stress of waterborne shafting flange bolts.

The shear stress of the shaft coupling bolts is obtained using (Eq-32):

$$S_{bt} = \frac{2 \times Q_T}{N_b \times A_{bt} \times D_{bc}}$$

$$= \frac{2 \times 7,229,300}{12 \times 4.3005 \times 26.06} \qquad = 10,751\ lb/in^2$$

$10,751 \leq 25,000$; therefore, bolt size is sufficient.

30.1.11 Summary of design results.

A summary of shaft stresses and factors of safety for all design points considered is tabulated in Table XII.

Table XII. Shaft stresses and factors of safety.

Stat.	152.80	385.00	411.25	735.00	780.75	1201.00	1228.08 (outer surface)	1228.08 (inter-face)
OD	14.00	14.000	14.00	18.75	18.75	18.75	18.75	18.25
ID	9.25	9.25	9.25	12.50	12.50	12.50	18.25	12.50
YP	75,000	75,000	75,000	45,000	45,000	45,000	60,000	45,000
FL	47,500	47,500	47,500	34,000	34,000	34,000	25,000	34,000
Q_T	7,229,300	7,229,300	7,229,300	7,229,300	7,229,300	7,229,300	7,229,300	7,229,300
S_s	16,600	16,600	16,600	6,970	6,970	6,970	5,822.9	6,936.9
T_T	196,000	196,000	196,000	196,000	196,000	196,000	196,000	196,000
S_c	2,259.3	2,259.3	2,259.3	1,277.5	1,277.5	1,277.5	1,098.7	1,296.4
S_{st}	33,280	33,280	33,280	13,998	13,998	13,998	11,698	13,934
M_T (max)	34,857	287,919	81,011	2,203,300	1,773,288	3,057,872	2,200,384	2,200,384
S_b	160.08	1,322.2	372.03	4,248.6	3,419.4	5,896.4	3,662.1	4,206.0
K_b	1.44	1.00	1.44	1.00	1.44	1.00	1.275	1.275
K_t	1.23	1.00	1.23	1.00	1.23	1.00	1.115	1.115
K_bS_b	-	-	-	4,248.6	4,923.9	5,896.4	4,669.2	5,362.7
K_bS_b (max allowed)	N/A	N/A	N/A	6,000	6,000	6,000	12,000	6,000
S_{as}	830.0	830.0	830.0	348.5	348.5	348.5	291.15	346.85
S_{ar}	2,054.8	2,122.2	2,110.9	4,305.4	4,998.0	5,937.5	4,714.1	5,418.1
FS	2.05	2.05	2.05	2.28	2.18	2.06	2.61	2.13
FS (min required)	1.75	1.75	1.75	2.00	2.00	2.00	2.00	2.00

STANDARDIZATION DOCUMENT IMPROVEMENT PROPOSAL

INSTRUCTIONS

1. The preparing activity must complete blocks 1, 2, 3, and 8. In block 1, both the comment number and revision letter should be given.

2. The submitter of this form must complete blocks 4, 5, 6, and 7.

3. The preparing activity must provide a reply within 30 days from receipt of this form.

NOTE: This form may not be used to request copies of documents, nor to request waivers, or clarification of requirements on current contracts. Comments submitted on this form do not constitute or imply authorization to waive any portion of the referenced document(s) or to amend contractual requirements.

I RECOMMEND A CHANGE:	1. DOCUMENT NUMBER MIL-STD-2189(SH) SECTION 243-1	2. DOCUMENT DATE (YYMMDD) 940830

3. DOCUMENT TITLE
DESIGN METHODS FOR NAVAL SHIPBOARD SYSTEMS SECTION 243-1 PART 1 PROPULSION SHAFTING.

4. NATURE OF CHANGE (identity paragraph number and include proposed rewrite, if possible. Attach extra sheets as needed.)

5. REASON FOR RECOMMENDATION

6. SUBMITTER

A. NAME (Last, First, Middle Initial)	b. ORGANIZATION	
c. ADDRESS (include Zip Code)	d. TELEPHONE (Include Area Code) (1) Commercial (2) DSN (if applicable)	7. DATE SUBMITTED (YYMMDD)

8. PREPARING ACTIVITY

A. NAME Technical Point of Contact (TPOC) MR. RICHARD KAMINSKY, SEA 03X71 ADDRESS ALL CORRESPONDENCE AS FOLLOWS:	b. TELEPHONE (Include Area Code) (1) Commercial: DSN: TPOC: 703-602-3474 8-332-3474
c. ADDRESS (Include Zip Code) COMMANDER, NAVAL SEA SYSTEMS COMMAND ATTN: SEA 03R42 2531 JEFFERSON DAVIS HIGHWAY ARLINGTON, VA 22242-5160	IF YOU DO NOT RECEIVE A REPLY WITHIN 45 DAYS, CONTACT: Defense Quality and Standardization Office 5203 Leesburg Pike, Suite 1403 Falls Church, VA 22041-3466 Telephone 703-756-2340 DSN 289-2340