METRIC
MIL-STD-2042-2C(SH)
18 October 2016
SUPERSEDING
MIL-STD-2042-2B(SH)
25 July 2002

DEPARTMENT OF DEFENSE
STANDARD PRACTICE

FIBER OPTIC CABLE TOPOLOGY INSTALLATION STANDARD METHODS FOR SURFACE SHIPS AND SUBMARINES

(EQUIPMENT)

(PART 2 OF 7 PARTS)

AMSC N/A

AREA SESS

FOREWORD

1. This standard is approved for use by the Naval Sea Systems Command, Department of the Navy, and is available for use by all Departments and Agencies of the Department of Defense.

2. This standard provides detailed information and guidance to personnel concerned with the installation of fiber optic cable topologies (optical fiber cabling and associated components) on naval surface ships and submarines. The methods specified herein are not identifiable to any specific ship class or type, except as noted. They are intended to standardize and minimize variations in installation methods to enhance the compatibility of the installations on all naval ships.

3. In order to provide flexibility in the use and update of the installation methods, this standard is issued in eight parts; the base standard and seven numbered parts as follows:

Part 1: Cables

Part 2: Equipment

Part 3: Cable Penetrations

Part 4: Cableways

Part 5: Connectors and Interconnections

Part 6: Tests

Part 7: Pierside Connectivity Cable Assemblies and Interconnection Hardware

4. Comments, suggestions, or questions on this document should be addressed to Commander, Naval Sea Systems Command, ATTN: SEA 05S, 1333 Isaac Hull Avenue, SE, Stop 5160, Washington Navy Yard, DC 20376-5160 or emailed to CommandStandards@navy mil (copy DLGR_NSWC_FO_ENG@navy.mil), with the subject line “Document Comment”. Since contact information can change, you may want to verify the currency of this address information using the ASSIST Online database at https://assist.dla.mil.

CONTENTS

PARAGRAPH PAGE

1. SCOPE....1
1.1 Scope....1
1.2 Applicability....1
2. APPLICABLE DOCUMENTS....1
2.1 General....1
2.2 Government documents....1
2.2.1 Specifications, standards, and handbooks....1
2.2.2 Other Government documents, drawings, and publications....2
2.3 Non-Government publications....3
2.4 Order of precedence....3
3. DEFINITIONS....3
3.1 General fiber optics terms....3
3.2 Other fiber optics terms....3
3.3 Acronyms....3
4. GENERAL REQUIREMENTS....4
4.1 Fiber optic equipment installation....4
4.1.1 Interconnection box and TRB selection....4
4.1.1.1 M24728/1, /2, and /3 interconnection box design....4
4.1.1.2 M24728/9 and /10 interconnection box design....4
4.1.1.3 TRB intent....4
4.1.2 Location....4
4.1.3 Interconnection box mounting....4
4.1.3.1 Bonding, grounding, and shielding....5
4.1.3.2 Holes drilled in beams....5
4.1.3.3 Welding....5
4.1.3.4 Fasteners....5
4.1.3.5 Dissimilar metals....5
4.2 Cable entrance to equipment....5
4.2.1 Cable slack....5
4.2.2 Cable forming and shaping....6
4.2.3 Tube forming and shaping....6
4.2.4 Interconnection organization....6
4.2.4.1 Connector organization....6
4.2.5 Nameplates and marking....6
4.2.5.1 Internal interconnection box patch panel, splice tray holder, and splice tray naming....7
4.2.5.2 Internal interconnection box marking....7
4.2.5.3 Internal TRB marking....7
4.2.6 BOF tube end termination....7
4.3 Safety precautions....7
4.4 Method improvement....8
4.5 Personnel qualifications....8
4.6 Or equal....8
5. DETAILED REQUIREMENTS....8
5.1 Fiber optic interconnection equipment installation....8
5.2 Cable entrance to equipment....8
5.2.1 Nylon stuffing tubes....8
5.2.2 Multiple cable penetrator (MCP)....8
5.2.2.1 Integral MCPs....8
5.2.2.2 MIL-DTL-24705/4, inserted frame MCPs....8
5.2.3 Cable clamps....8
5.2.4 BOF cable density limitations....8
5.3 Interconnection organization....9

CONTENTS

PARAGRAPH PAGE
5.3.1 Conventional cable 9
5.3.2 BOF cable 9
5.4 Fusion splice organization 9
5.5 BOF tube furcation unit fabrication 9
5.6 BOF tube furcation unit installation 9
5.7 BOF tube end sealing 9
6. NOTES 10
6.1 Intended use 10
6.2 Acquisition requirements 10
6.3 Standard method designation 10
6.4 Subject term (key word) listing 11
6.5 Proposed new methods or method modifications 11
6.6 Dahlgren shipboard fiber optics website 11
6.7 Changes from previous issue 11
METHOD 2A1 CONVENTIONAL CABLE ENTRANCE TO EQUIPMENT VIA NYLON STUFFING TUBES 12
METHOD 2B1 CONVENTIONAL CABLE ENTRANCE TO EQUIPMENT VIA INTEGRAL MCP WITH MIL-DTL-24705/1 TYPE INSERT BLOCKS 18
METHOD 2B2 CONVENTIONAL CABLE ENTRANCE TO EQUIPMENT VIA INTEGRAL MCP WITH PEEL AWAY TYPE INSERT BLOCKS 22
METHOD 2B3 CONVENTIONAL CABLE ENTRANCE TO EQUIPMENT VIA M24705/4 INSERTED FRAME MCP AND PEEL AWAY TYPE INSERT BLOCKS 26
METHOD 2C1 CONVENTIONAL CABLE, LOOSE TUBE FURCATION CABLES, BUFFERED FIBER, AND 5-MILLIMETER BOF TUBE FORMING AND SHAPING FOR M24728/1, /2, AND /3 FOICBs 30
METHOD 2C2 CONVENTIONAL CABLE, LOOSE TUBE FURCATION CABLE, AND 5-MILLIMETER BOF CABLE FORMING, ROUTING, AND SHAPING WITHIN M24728/9 AND /10 FOICBs 35
METHOD 2D1 SPLICE ASSEMBLY AND ALIGNMENT 40
METHOD 2E1 BOF TUBE FURCATION UNIT FABRICATION 41
METHOD 2F1 BOF TUBE FURCATION UNIT INSTALLATION 47
METHOD 2F2 BOF TUBE FURCATION UNIT INSTALLATION WITH POLYACRYLAMIDE USING CLEAR TUBING 48
METHOD 2F3 BOF TUBE FURCATION UNIT INSTALLATION WITH POLYACRYLAMIDE USING TEE TUBE COUPLER 57
METHOD 2F4 TUBE FURCATION UNIT INSTALLATION, BLOWN OPTICAL FIBER, EXTERNAL 67
METHOD 2G1 BOF CABLE ENTRANCE TO EQUIPMENT VIA NYLON STUFFING TUBES 71
METHOD 2H1 BOF CABLE ENTRANCE TO EQUIPMENT VIA INTEGRAL MCP WITH M24705/1 TYPE INSERT BLOCKS 78
METHOD 2H2 BOF CABLE ENTRANCE TO EQUIPMENT VIA INTEGRAL MCP WITH PEEL AWAY TYPE INSERT BLOCKS 82
METHOD 2H3 BOF CABLE ENTRANCE TO EQUIPMENT VIA M24705/4 FRAME MCP AND PEEL AWAY TYPE INSERT BLOCKS 86
METHOD 2I1 BOF CABLE FORMING, ROUTING, AND SHAPING WITHIN TRBs 90
METHOD 2I2 BOF CABLE FORMING, ROUTING, AND SHAPING FOR M24728/1, /2, AND /3 FOICBs 96
METHOD 2I3 BOF CABLE FORMING, ROUTING, AND SHAPING WITHIN M24728/9 AND /10 FOICBs 100
METHOD 2J1 BOF TUBE END SEALING 104
METHOD 2K1 FUSION SPLICE TRAY ROUTING, SHAPING, AND FORMING FOR M24728/8-51 7-INCH TRAY, FIBERGLASS TAPE ATTACHMENT 107
METHOD 2K2 FUSION SPLICE ROUTING, SHAPING, AND FORMING FOR 10-INCH COTS SPLICE TRAY12
METHOD 2K3 FUSION SPLICE TRAY ROUTING, SHAPING, AND FORMING FOR M24728/8-51 7-INCH TRAY, BRASS SLEEVE ARAMID YARN CAPTURE 139
METHOD 2L1 EIGHT-TO-FIVE-MILLIMETER (8-TO-5-MILLIMETER) BOF TUBE TRANSITION WITHIN PROTECTIVE ENCLOSURES 153
METHOD 2M1 FIVE-MILLIMETER (5-MILLIMETER) BOF TUBE ATTACHMENT TO SPLICE TRAYS 162

CONTENTS

LIST OF FIGURES

FIGURE PAGE

2-1. Example patch panel configuration 6
2A1-1. Straight tube 15
2A1-2. "Y" tube 15
2A1-3. 90-degree angle tube 16
2A1-4. NPT tube 16
2B1-1. Interconnection box integral MCP – (typical) 21
2B2-1. Interconnection box integral MCP – typical 25
2B3-1. Interconnection box with M24705/4-FA01 frame type MCP (typical) 29
2C1-1. Forming and shaping (typical) 33
2C2-1. M24728/9 fiber optic interconnection box (FOICB) 35
2C2-2. M24728/10 fiber optic interconnection box (FOICB) 35
2E1-1. Aligning the loose tube furcation cables 43
2E1-2. Folding back the aramid yarn 44
2E1-3. Loose tube furcation cables joined to the BOF tube 44
2E1-4. Completed assembly 45
2F2-1. Placement of tube coupler 50
2F2-2. Preparation of bundled fiber 51
2F2-3. Installation of clear BOF tubing 52
2F2-4. Installation of tapered tube plug for bundled fiber 53
2F2-5. Installation of tapered tube plug for individual fibers 53
2F2-6. Completed tube and fiber preparation 54
2F2-7. Insertion of fibers within loose tube furcation cables 54
2F2-8. Furcation assembly after attachment of loose tube furcation cables 55
2F3-1. Completed tube and fiber preparation 59
2F3-2. Preparation of bundled fiber 60
2F3-3. Installation of clear BOF tubing 61
2F3-4. Installation of tapered tube plug for bundled fiber 61
2F3-5. Installation of tapered tube plug for individual fibers 62
2F3-6. Completed clear tube preparation 62
2F3-7. Installation of tee tube coupler 63
2F3-8. Completed preparation of tee tube coupler installation 63
2F3-9. Insertion of fiber into furcation unit 64
2F3-10. Attachment of furcation unit to tee tube coupler assembly 64
2F3-11. Insertion of polyacrylamide crystals through tee tube coupler 66
2F3-12. Completed tee tube coupler furcation assembly with polyacrylamide crystals 66
2F4-1. Installation of adapter 1 onto single tube BOF cable 69
2F4-2. Completed external single tube BOF furcation 70
2G1-1. Straight tube 74
2G1-2. 45-degree angle tube 74
2G1-3. "Y" tube 75
2G1-4. 90-degree angle tube 75
2G1-5. NPT tube 76

CONTENTS

LIST OF FIGURES

FIGURE PAGE

2H1-1. Interconnection box integral MCP (typical) 80
2H2-1. Interconnection box integral MCP (typical) 85
2H3-1. Interconnection box with M24705/4-FA01 frame type MCP (typical) 89
2I1-1. Routing BOF tubes in TRB 93
2I1-2. Typical jumper tube paths 95
2I2-1. Routing BOF tubes in an FOICB 99
2I3-1. M24728/9 fiber optic interconnection box 102
2I3-2. M24728/10 fiber optic interconnection box 103
2K1-1. Diagram of splice tray 109
2K1-2. OFCC initial marking 110
2K1-3. Installing ID marker 110
2K1-4. OFCC final marking 111
2K1-5. Diagram of 63.5-centimeter (25-inch) strip length with aramid yarn 111
2K1-6. Fiber identification markers 112
2K1-7. Inserting aramid yarn 112
2K1-8. Tie wrap installation 113
2K1-9. Taping down aramid yarn 114
2K1-10. Fiber waste loop 114
2K1-11. Gathering aramid yarn 115
2K1-12. Tie wrap installation 115
2K1-13. Aramid yarn positioning on back of splice tray 116
2K1-14. Taping aramid yarn down on back of splice tray 117
2K1-15. Figure-eight pattern 118
2K1-16. Fiber tucking 119
2K2-1. Diagram of 10-inch COTS splice tray 125
2K2-2. Splice sleeve holder spacing 125
2K2-3. Placement of splice sleeve holders on tray 126
2K2-4. OFCC marking of entry point and retention slot 127
2K2-5. Diagram of OFCC/fiber marking and the 83.82-centimeter (33-inch) fiber length with aramid yarn 128
2K2-6. Aramid yarn loop diagrams (two to four OFCCs) 129
2K2-7. Tie wrap through aramid yarn loop 130
2K2-8. Tie wrap through aramid yarn loop 131
2K2-9. Aramid yarn loop diagrams (5 through 12 OFCCs) 133
2K2-10. Figure-eight pattern 135
2K2-11. Figure routing 136
2K2-12. Splice installation (in upper splice sleeve holder, location 1) 136
2K2-13. Figure-eight pattern 137
2K2-14. Splice installation (in lower splice sleeve holder, location 24) 138
2K2-15. Optional labeling of 10-inch COTS splice tray 138
2K3-1. OFCC initial marking 141
2K3-2. Installing ID marker 142
2K3-3. OFCC final marking 142
2K3-4. Diagram of 63.5-centimeter (25-inch) strip length with aramid yarn 143

CONTENTS

LIST OF FIGURES

FIGURE PAGE
2K3-5. Diagram of splice tray 144
2K3-6. Separation of the aramid yarn 144
2K3-7. Installation of the brass eyelet 145
2K3-8. Continued installation of the brass eyelet 145
2K3-9. Insertion of the brass eyelet into the BOF tubing 146
2K3-10. Capturing the aramid yarn with fiberglass tape 146
2K3-11. Cutting back aramid yarn 147
2K3-12. Securing the BOF tube assembly to the splice tray with tie wraps 147
2K3-13. Fiber markers 148
2K3-14. Figure-eight pattern 149
2K3-15. Fiber tucking 150
2K3-16. Splice installation 151
2K3-17. Finished splice tray 151
2K3-18. Example of labeling 152
2L1-1. BOF tee tube coupler with clear BOF tube 156
2L1-2. Applying the tapered tube plug onto the sealant tape and individual blown fibers 157
2L1-3. First tapered tube plug installed with individual blown fibers 157
2L1-4. Bundle mark 157
2L1-5. Applying the tapered tube plug onto the fiber bundle 158
2L1-6. First tapered tube plug installed with BOF bundle 159
2L1-7. Feeding blown fibers through BOF tee tube coupler (and clear BOF tubing) 159
2L1-8. Applying second tapered tube plug onto blown fibers 159
2L1-9. BOF 8-to-5-millimeter reducer coupler with 5-millimeter BOF tube 160
2L1-10. Feeding the blown fibers into the BOF 8-to-5-millimeter reducer coupler (with 5-millimeter BOF tube). 160
2L1-11. Eight-to-five-millimeter (8-to-5-millimeter) BOF tube transition 161
2L1-12. 8-millimeter to 5-millimeter BOF tube transition (with polyacrylamide crystals) 161
2M1-1. Fusion splice tray layout (7-inch tray shown as example) 165
2M1-2. Inserting blown fibers through brass sleeve 166
2M1-3. 5-millimeter BOF tube and brass sleeve with blown fibers 167
2M1-4. 5-millimeter BOF tube and brass sleeve without blown fibers 167
2M1-5. Mounting positions and retention slot identification 168
2M1-6. BOF tube attachment, BOF tube location on splice tray (6A) and first tie wrap (6B) 168
2M1-7. BOF tube attachment, second tie wrap (7A), and attached BOF tube (7B) 169
2M1-8. Splice tray with two 5-millimeter BOF tubes 169
2M1-9. Splice tray with three 5-millimeter BOF tubes 170
2M1-10. Tapered tube plug installation for individual fibers 171
2M1-11. Tapered tube plug installation for BOF bundle 171
2M1-12. Installation of 5 millimeter BOF straight tube coupler to BOF tube 172
2M1-13. Installation of 5-millimeter BOF straight tube coupler to tray 172

CONTENTS

LIST OF TABLES

TABLE PAGE

2-I. Fiber optic interconnection box (FOICB) and TRB maximum BOF cable density 9
2A1-I. Equipment and materials 13
2A1-II. Nylon stuffing tube sizes for optical fiber cable 14
2A1-III. Nylon stuffing tube data 14
2B1-I. Equipment and materials 19
2B1-II. MCP data and insert block sizes for optical fiber cables 20
2B2-I. Equipment and materials 23
2B2-II. MCP data and insert block sizes for optical fiber cables 24
2B3-I. Equipment and materials 27
2B3-II. MCP data and insert block sizes for optical fiber cables 28
2C1-I. Equipment and materials 31
2C2-I. Equipment and materials 37
2E1-I. Equipment and materials 42
2F2-I. Equipment and materials 49
2F2-II. Fiber color coding 56
2F3-I. Equipment and materials 58
2F3-II. Fiber color coding 65
2F4-I. Equipment and materials 68
2G1-I. Equipment and materials 72
2G1-II. Nylon stuffing tube sizes for BOF cable 73
2G1-III. Nylon stuffing tube ASTM data 73
2H1-I. Equipment and materials 79
2H1-II. MCP data and insert block sizes for BOF cables 79
2H2-I. Equipment and materials 83
2H2-II. MCP data and insert block sizes for BOF cables 83
2H3-I. Equipment and materials 87
2H3-II. MCP data and insert block sizes for BOF cables 88
2I1-I. Equipment and materials 91
2I2-I. Equipment and materials 97
2I3-I. Equipment and materials 101
2J1-I. Equipment and materials 105
2K1-I. Equipment and materials 108
2K2-I. Equipment and materials 124
2K3-I. Equipment and materials 140
2L1-I. Equipment and materials 154
2M1-I. Equipment and materials 163

1. SCOPE

1.1 Scope. This standard provides requirements and detailed methods for the installation of fiber optic cable topology (FOCT) equipment and optical fiber cable entry to FOCT and other equipment on surface ships and submarines.

1.2 Applicability. The installation methods in this document are intended to be used by all installing activities. These methods establish standards for installations in all naval ships and are not identifiable to any specific ship class or type, except as noted. The methods in this document are for new construction as well as for conversions, alterations, and repairs.

2. APPLICABLE DOCUMENTS

2.1 General. The documents listed in this section are specified in sections 3, 4, or 5 of this standard. This section does not include documents cited in other sections of this standard or recommended for additional information or as examples. While every effort has been made to ensure the completeness of this list, document users are cautioned that they must meet all specified requirements of documents cited in sections 3, 4, or 5 of this standard, whether or not they are listed.

2.2 Government documents.

2.2.1 Specifications, standards, and handbooks. The following specifications, standards, and handbooks form a part of this document to the extent specified herein. Unless otherwise specified, the issues of these documents are those cited in the solicitation or contract.

COMMERCIAL ITEM DESCRIPTIONS

A-A-59729	-	Furcation Units, Tube, Blown Optical Fiber
A-A-59731	-	Tube Fittings, Blown Optical Fiber

DEPARTMENT OF DEFENSE SPECIFICATIONS

MIL-DTL-15024	-	Plates, Tags, and Bands for Identification of Equipment, General Specification for
MIL-P-15024/5	-	Plate, Identification
MIL-E-24142	-	Enclosures for Electrical Fittings and Fixtures, General Specification for
MIL-E-24142/6	-	Enclosure, Submersible (15-Foot), Sizes 8 by 10 and through 14 by 26
MIL-E-24142/7	-	Enclosures, Submersible (15-Foot), Size 20 by 24
MIL-S-24235	-	Stuffing Tubes, Metal and Packing Assemblies for Electrical Cables, General Specification for
MIL-DTL-24705/4	-	Penetrators, Multiple Cable, Compact Rectangular Metal Frame and Blocks, Electrical and Fiber Optic Cable
MIL-I-24728	-	Interconnection Box, Fiber Optic, General Specification for
MIL-I-24728/1	-	Interconnection Box, Fiber Optic, Submersible, 254 × 330 mm
MIL-I-24728/2	-	Interconnection Box, Fiber Optic, Submersible, 308.4 × 609.6 mm
MIL-I-24728/3	-	Interconnection Box, Fiber Optic, Submersible, 406.4 × 863.6 mm
MIL-DTL-24728/8	-	Interconnecting Box, Fiber Optic, Fusion Splice Tray and Holder Module
MIL-DTL-24728/9	-	Interconnection Box, Cable Routing, Fiber Optic, Spraytight, 712 × 1372 mm

MIL-DTL-24728/10	-	Interconnection Box, Cable Routing, Fiber Optic, Spraytight, 712 × 1017 mm
MIL-DTL-24728/11	-	Interconnecting Box, Fiber Optic, Splice Tray Holder Module, 8 Tray
MIL-PRF-28876	-	Connectors, Fiber Optic, Circular, Plug and Receptacle Style, Multiple Removable Termini, General Specification for
MIL-PRF-64266	-	Connectors, Fiber Optic, Circular and Rectangular, Plug and Receptacle Style, Multiple Removable Genderless Termini, Environment Resisting General Specification for
MIL-PRF-85045	-	Cables, Fiber Optic, General Specification for
MIL-PRF-85045/25	-	Cable, Fiber Optic, Seven Tube, Blown Optical Fiber, Standard and Enhanced Performance, Cable Configuration Type 5 (Tube), Application B (Shipboard), Cable Class SM and MM

DEPARTMENT OF DEFENSE STANDARDS

MIL-STD-461	-	Requirements for the Control of Electromagnetic Interference Characteristics of Subsystems Equipment
MIL-STD-889	-	Dissimilar Metals
MIL-STD-1310	-	Shipboard Bonding, Grounding, and other Techniques for Electromagnetic Compatibility, Electromagnetic Pulse (EMP) Mitigation, and Safety
MIL-STD-1678-1	-	Fiber Optic Cabling Systems Requirements and Measurements (Part 1: Design, Installation and Maintenance Requirements) (Part 1 of 6 Parts)
MIL-STD-2003	-	Electric Plant Installation Standard Methods for Surface Ships and Submarines
MIL-STD-2003-1	-	Electric Plant Installation Standard Methods for Surface Ships and Submarines (Cable)
MIL-STD-2003-2	-	Electric Plant Installation Standard Methods for Surface Ships and Submarines (Equipment)

(Copies of these documents are available online at http://quicksearch.dla.mil/.)

2.2.2 Other Government documents, drawings, and publications. The following other Government documents, drawings, and publications form a part of this document to the extent specified herein. Unless otherwise specified, the issues of these documents are those cited in the solicitation or contract.

NAVAL SEA SYSTEMS COMMAND (NAVSEA) PUBLICATIONS

S9074-AR-GIB-010/278	-	Requirements for Fabrication Welding and Inspection, and Casting Inspection and Repair for Machinery, Piping, and Pressure Vessels

(Copies of this document are available online via Technical Data Management Information System (TDMIS) at https://mercury.tdmis navy mil/ by searching for the document number without the suffix. Refer questions, inquiries, or problems to: DSN 296-0669, Commercial (805) 228-0669. These documents are available for ordering (hard copy) via the Naval Logistics Library at https://nll.ahf nmci.navy.mil. For questions regarding the NLL, contact the NLL Customer Service at nllhelpdesk@navy.mil, (866) 817-3130, or (215) 697-2626/DSN 442-2626.)

2.3 Non-Government publications. The following documents form a part of this document to the extent specified herein. Unless otherwise specified, the issues of these documents are those cited in the solicitation or contract.

AMERICAN NATIONAL STANDARDS INSTITUTE (ANSI)

ANSI Z136.1 - American National Standard for Safe Use of Lasers

ANSI Z136.2 - Safe Use of Optical Fiber Communication Systems Utilizing Laser Diode and LED Sources

(Copies of these documents are available online at http://webstore.ansi.org/.)

AMERICAN SOCIETY FOR TESTING AND MATERIALS (ASTM)

ASTM F1836M - Standard Specification for Stuffing Tubes, Nylon, and Packing Assemblies (Metric)

(Copies of this document are available online at www.astm.org.)

TELECOMMUNICATIONS INDUSTRY ASSOCIATION

TIA-440 - Fiber Optic Terminology

(Copies of this document are available online at www.tiaonline.org.)

SAE INTERNATIONAL

SAE-AMS-DTL-23053/5 - Insulation Sleeving, Electrical, Heat Shrinkable, Polyolefin, Flexible, Crosslinked

SAE-AS23190 - Wiring, Positioning, and Support Accessories

(Copies of these documents are available online at www.sae.org.)

2.4 Order of precedence. Unless otherwise noted herein or in the contract, in the event of a conflict between the text of this document and the references cited herein, the text of this document takes precedence. Nothing in this document, however, supersedes applicable laws and regulations unless a specific exemption has been obtained.

3. DEFINITIONS

3.1 General fiber optics terms. Definitions for general fiber optics terms used in this standard are in accordance with TIA-440.

3.2 Other fiber optics terms. Definitions for other terms as they are used in this standard are given in the general standard MIL-STD-2042.

3.3 Acronyms. The following acronyms are used in this standard:

a. BOF: Blown Optical Fiber

b. FOCP: Fiber Optic Cable Plant

c. FOCT: Fiber Optic Cable Topology

d. FOICB: Fiber Optic Interconnection Box

e. GRP: Glass Reinforced Plastic

f. LED: Light Emitting Diode

g. MCP: Multiple Cable Penetrator

h. NRC: Non-Redundant Channel

i. OFCC: Optical Fiber Cable Component

j. OFCS: Optical Fiber Communications System

k. TRB: Tube Routing Box

4. GENERAL REQUIREMENTS

4.1 Fiber optic equipment installation. Interconnection boxes in accordance with MIL-I-24728 and tube routing boxes (TRBs) in accordance with MIL-I-24728 or MIL-E-24142 shall be installed as specified herein.

4.1.1 Interconnection box and TRB selection. The interconnection box type shall be selected in accordance with MIL-I-24728 or as approved by the Naval Surface Warfare Center, Dahlgren Division (NSWCDD) (see 6.5). The interconnection box shall be sized to provide sufficient capacity to accept the total number of fibers entering the box (including growth fibers). For boxes with blown optical fiber (BOF) cabling, interconnection boxes shall have capacity reserved for fiber that may be installed in unused BOF trunk tubes. Fiber optic interconnection boxes (FOICBs) shall also be sized to provide sufficient capacity to accept the total number of BOF tubes entering the box (see 5.2.4). Due to internal box space constraints, M24728/1 fiber optic interconnection boxes should not, to the maximum extent possible, be utilized for fusion splicing interconnections housed in M24728/8-50 splice tray holders. The TRB box type shall be selected in accordance with either MIL-E-24142 or MIL-I-24728, or as approved by NSWCDD (see 6.5). TRBs shall be sized to provide sufficient capacity to accept the total number of BOF tubes entering the box (see 5.2.4).

4.1.1.1 M24728/1, /2, and /3 interconnection box design. FOICBs are designed to accommodate fiber optic interconnections for network systems. Interconnections and BOF tube connections shall not co-exist in an M24728/1, /2, and /3 FOICB. M24728/1, /2, and /3 FOICBs that are designated as tube routing boxes for the purpose of making BOF tube connections shall be dedicated for this purpose and shall not contain other types of fiber optic interconnections.

4.1.1.2 M24728/9 and /10 interconnection box design. Boxes in accordance with MIL-DTL-24728/9 and MIL-DTL-24728/10 are designed to accommodate both fiber optic interconnections and BOF tube routing connections. These boxes do not meet the submersion requirement for surface ships and shall not be installed below a surface ship's V-line. These boxes shall not exceed the BOF cable density limitations specified herein (see 5.2.4).

4.1.1.3 TRB intent. TRBs in accordance with MIL-E-24142/6-012, MIL-E-24142/6-014, and MIL-E-24142/7-001 boxes are designed to accommodate BOF tube connections. Fiber optic interconnections shall not be permitted in these boxes. TRBs shall not exceed the BOF cable density limitations specified herein (see 5.2.4).

4.1.2 Location. Boxes shall be located in accordance with the following requirements:

a. In instances where a box interfaces directly with only one end user equipment, the box shall be located as close as possible to that equipment without interfering with any other systems or violating any other requirements specified herein. If a box interfaces directly with two or more pieces of end user equipment, the box shall be so located as to keep the majority of local cable runs as short as possible. For end user equipment with local cables that must be separated due to survivability requirements, the boxes that connect these local cables to trunk cables shall be located in different compartments, except for the case where the interconnection box and the equipment are in the same compartment. In this situation, both cables may be run from the equipment to the same box.

b. Boxes shall be located in spaces protected from the weather whenever possible. Boxes shall not be installed in voids or inaccessible spaces. If mounting the box within gun or missile blast areas cannot be avoided, it shall be located clear of maximum deflection or whip of bulkheads and deck plating.

c. Unless otherwise approved by NSWCDD (see 6.5), box location shall provide ready access and entry for maintenance. No part of the box shall be at a height greater than 2.13 meters (7 feet) above the deck, with the preferred maximum height being 1.52 meters (5 feet). There shall be a minimum of 0.61 meter (2 feet) of clearance in front of the box.

4.1.3 Interconnection box mounting. Interconnection boxes shall be mounted in accordance with the methods specified in 5.1.

4.1.3.1 Bonding, grounding, and shielding. Boxes that contain active fiber optic components, such as switches or transceivers, shall be bonded, grounded, and shielded in accordance with MIL-STD-1310. Bonding, grounding, and shielding inside the box shall be in accordance with MIL-STD-1310 and MIL-STD-461.

4.1.3.2 Holes drilled in beams. Holes drilled in structural members for passing cables or securing equipment shall be on the neutral axis of the beam or between the neutral axis and the point of attachment.

4.1.3.3 Welding. Welding of studs, step hangers, tapped pads, mounting pads, and extension hangers shall be in accordance with S9074-AR-GIB-010/278. Any required tapping shall be done before welding.

4.1.3.4 Fasteners. Material for the bolts, nuts, machine screws, and washers used to fasten boxes to decks and bulkheads shall be as specified in the methods described herein. Through-bolts and self-locking nuts shall be used to mount boxes located as follows:

a. In gun mounts.

b. In missile launch areas.

c. In submarine battery compartments above the level of the lowest cell tops.

4.1.3.5 Dissimilar metals. Where design requirements preclude the isolation of incompatible metal combinations, as identified in MIL-STD-889, from one another, the area in contact shall, as a minimum, be coated, treated, or otherwise insulated against corrosion in accordance with the recommended treatments in order of protective effectiveness specified in MIL-STD-889.

4.2 Cable entrance to equipment. Optical fiber cables shall enter equipment in accordance with the methods described herein and as follows:

a. Cables shall enter splash-proof, spraytight, watertight, submersible, and explosion-proof equipment through multiple cable penetrators (MCPs) integral to the equipment, M24705/4 MCP frames, stuffing tubes, or an approved cable feed-through. When stuffing tubes are used, entrance shall be made through the bottom or sides of the equipment where possible. Stuffing tubes used to enter splash-proof, spraytight, or watertight equipment shall be nylon in accordance with ASTM F1836M. Stuffing tubes used to enter submersible (50-foot) and explosion-proof equipment shall be metal in accordance with MIL-S-24235.

b. Cables shall enter molded plastic equipment through nylon stuffing tubes.

c. Connector plugs and receptacles used for cable entrance shall be in accordance with MIL-PRF-28876 or MIL-PRF-64266, unless otherwise approved by NSWCDD (see 6.5).

d. Cable entering approved FOICBs and TRBs shall be in accordance with MIL-PRF-85045, unless otherwise approved by NSWCDD (see 6.5).

4.2.1 Cable slack. Cables shall be secured to ship structure as close as possible to the equipment without violating cable long-term bend diameter requirements. Cables entering hard-mounted equipment shall have sufficient slack between the equipment and the last point of cable support to prevent damage to the cable caused by vibration. Cables connected to equipment provided with resilient or shock mounts shall have a minimum length of 46 centimeters (18 inches) with sufficient slack (minimum of 10.2 centimeters [4 inches]) between the equipment and the last point of support of the cable to provide for flexibility and movement of the equipment under shock, vibration, and in-service loading. Cables terminated in a heavy duty (multiple terminus) connector shall have an additional minimum of 33 centimeters (13 inches) of slack in the cableway from which the cable exits to provide for two re-terminations. For cables that enter equipment by way of stuffing tubes or MCPs, there shall be enough slack inside the equipment for a minimum of two re-terminations. Where connectors are used for cable entrance to equipment, the cables shall be installed such that the connectors may be easily removed.

4.2.2 Cable forming and shaping. Optical fiber cable components (OFCCs) inside of equipment enclosures shall be routed to avoid exposure to temperatures above 65 °C. OFCCs, loose tube furcation cables, and buffered fibers within interconnection boxes shall be routed around the inside edges of the box such that they do not block or otherwise obstruct access to any connections within the box. The group or bundle of OFCCs or loose tube furcation cables shall be protected from possible damage on sharp edges by using ties, clamps, or tubing. Care shall be taken when attaching the group or bundle as shown in the methods herein to prevent kinking or cutting the OFCC or loose tube furcation cable jackets and to ensure that bends do not violate the minimum short-term bend diameter of eight times the OFCC or loose tube furcation cable outer diameter (OD) and the minimum long term bend diameter of sixteen times the OFCC or loose tube furcation cable OD.

4.2.3 Tube forming and shaping. BOF tubes within interconnection boxes shall be routed around the inside edges of the box such that they do not block or otherwise obstruct access to any connections within the box. BOF tubes within TRBs shall be routed around the inside edges of the box to the maximum extent practicable. The tubes shall be organized using ties, clamps, or other organization devices. Care shall be taken when organizing the BOF tubes as shown in the methods herein to prevent kinking or crushing the tubes and to ensure that bends do not violate the tube minimum short-term and long-term bend diameter of 130 millimeters (5 inches) for 8-millimeter BOF tube or 101.6 millimeters (4 inches) for 5-millimeter BOF tube.

4.2.4 Interconnection organization. All fiber optic connectors and adapters shall be mounted on the M24728/6 optical patch panels mounted in the interconnection box. Fiber optic fusion splices shall be housed in M24728/8 splice trays mounted in M24728/8 or M24728/11 splice tray holder modules. Unterminated fibers shall be tied off in the bundle for patch panel installations or stowed in the splice tray in accordance with Method 2K1 for fusion splice installations. If the installing activity is responsible for the internal configuration of the interconnection box, the configuration shall be in accordance with 4.2.4.1 for patch panel installations or in accordance with Method 2K1 for fusion splice installations.

4.2.4.1 Connector organization. The individual patch panels shall be filled starting with the row closest to the inside of the box and working outward (see figure 2-1 for guidance). Allocated fibers (normal, alternate, and non-redundant channel [NRC] fibers and system growth and spare fibers) shall be located nearest the inside of the box. Spare fibers shall be located in close proximity to their respective allocated fibers. Unused adapters shall be located closest to the outside of the box.

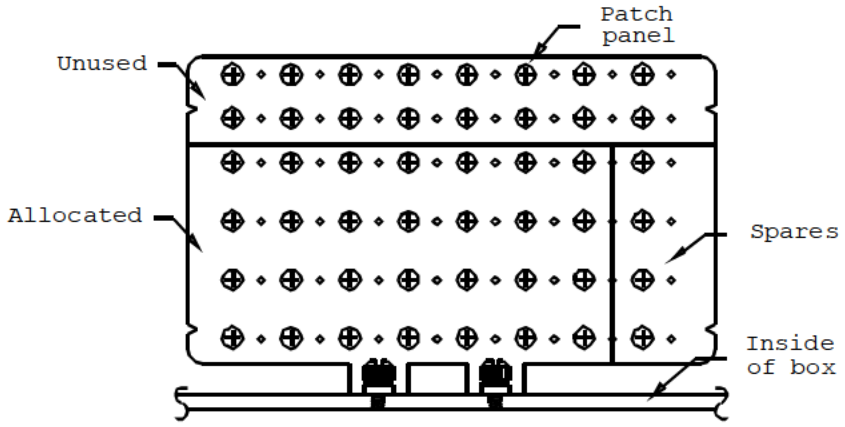

FIGURE 2-1. Example patch panel configuration.

4.2.5 Nameplates and marking. Nameplates shall be provided for all equipment and shall be in accordance with MIL-DTL-15024 and MIL-P-15024/5. Marking shall be in accordance with the requirements herein. Interconnection box and TRB identification and location plates shall be located on the outside of the cover. Cable marking at the equipment interface shall be in accordance with MIL-STD-2042-1.

4.2.5.1 Internal interconnection box patch panel, splice tray holder, and splice tray naming. Patch panels, splice tray holders, and splice trays in fiber optic interconnection boxes shall be numbered or lettered sequentially from left to right first and then top to bottom.

4.2.5.2 Internal interconnection box marking. Each connector or adapter position on the optical patch panels shall be marked. A configuration chart showing all the connections within the box shall be permanently attached to the inside of the box. The input and output cable and fiber numbers and the patch panel connector or fusion splice tray position number shall be shown for each connection. The configuration chart for BOF interconnection boxes shall also provide the furcation unit identification number, if applicable, and the tube identification number for each connection. For unterminated fibers, the configuration chart shall show the patch panel adapter number reserved for each fiber (if applicable). In those instances where lasers are used as optical sources, each interconnection box shall be internally marked in accordance with ANSI Z136.1. In those instances where BOF connections or furcation units are contained within the interconnection box, the box shall be internally marked in a conspicuous location with the following:

"CAUTION: DO NOT DISENGAGE MATED BOF TUBE FITTINGS UNLESS AUTHORIZED. DISENGAGING UTILIZED BOF TUBE FITTINGS MAY DAMAGE/BREAK THE OPTICAL FIBERS CONTAINED WITHIN THE BOF TUBES."

4.2.5.3 Internal TRB marking. A configuration chart showing all the tube connections within the box shall be permanently attached to the inside of the box. The path identification and the tube identification numbers of the connected tubes shall be shown for each pair of connected tubes. BOF TRBs shall be internally marked in a conspicuous location with the following:

"CAUTION: DO NOT DISENGAGE MATED BOF TUBE FITTINGS UNLESS AUTHORIZED. DISENGAGING UTILIZED BOF TUBE FITTINGS MAY DAMAGE/BREAK THE OPTICAL FIBERS CONTAINED WITHIN THE BOF TUBES."

4.2.6 BOF tube end termination. BOF tubes within equipment shall always be terminated to other BOF tubes, BOF tube furcation units, or approved tube couplers and plugs or end caps in accordance with A-A-59731. BOF termination devices shall be as specified herein or as approved by NSWCDD (see 6.5).

4.3 Safety precautions. The following safety precautions shall apply:

a. Observe all written safety precautions given in the methods of this standard.

b. Observe all warning signs on equipment and materials.

c. The classification of a laser is based on the ability of the optical beam to cause damage to the eye. Under normal operating conditions, an optical fiber communication system (OFCS) is inherently an eye-safe system; however, when an optical fiber connection is broken and optical viewing instruments are used, it is possible that hazardous energy can enter the eye. For this reason, four service group hazard classes have been devised to indicate the degree of hazard and required hazard control measures. Refer to ANSI Z136.2 for a full technical definition. The following laser safety precautions shall apply:

(1) Ensure personnel are familiar with the laser degree of hazard and the required control measures.

(2) Light generated by light emitting diodes (LEDs) and laser diodes may not be visible but may still be hazardous to the unprotected eye. Do not stare into the end of an optical fiber connected to an LED or laser diode and do not stare into broken, severed, or disconnected optical cables.

(3) Do not view the primary beam or a specular reflection from an OFCS with an optical microscope, eye loupe, or other viewing instrument. The instrument may create a hazard due to its light gathering capability.

d. Wear safety glasses when handling bare fibers. Always handle cable carefully to avoid personal injury. The ends of optical fibers may be extremely sharp and can lacerate or penetrate the skin or cause permanent eye damage if touched. If the fiber penetrates the skin, it most likely will break off, in which case the extraction of the fiber should be performed by trained medical personnel to prevent further complications.

e. Never look into the end of a BOF tube. Always wear approved safety glasses when handling BOF tubes that may be connected to a pressure source.

f. Wash hands after handling bare fibers.

g. Do not eat or drink in the vicinity of bare optical fibers. Ingested optical fibers may cause serious internal damage.

4.4 Method improvement. Where the methods herein cannot be implemented, users shall submit proposed new methods or proposed modifications of existing methods, as specified (see 6.5).

4.5 Personnel qualifications. Fiber optic installers, supervisors, and Quality Assurance (QA) personnel shall meet Navy shipboard personnel proficiency requirements identified in MIL-STD-1678-1, Requirement 1306 for all fiber optic installations, modifications, and repairs.

4.6 Or equal. MIL-STD-2042 uses the term "or equal" to permit the use of parts, components, or tools that are equivalent and can perform the same function as the specified products. The use of the equivalent product is allowed as long as the same functional characteristics, performance, equipment safety, personnel safety, suitability for marine service, life cycle cost, maintenance cost, and supportability are attained, and agreement is obtained from NAVSEA (see 6.5). The request for agreement for the use of "equal" products shall include data that supports that functional and performance equivalence is retained.

5. DETAILED REQUIREMENTS

5.1 Fiber optic interconnection equipment installation. The methods covered herein are applicable to FOICBs and TRBs. They may be extended to other fiber optic interconnection equipment with authorized approval (see 6.5). The mounting of these boxes on ship structure is the same as the standard mounting methods of electrical enclosures given in MIL-STD-2003-2. NOTE: The mounting of these boxes does not include penetrations to the box for cable entry. For interconnection equipment containing single mode fiber connections, shock isolation mounting methods may be required to meet system requirements.

5.2 Cable entrance to equipment. Optical fiber cable entrance into equipment may employ some of the same devices (e.g., stuffing tubes) used for electric cable entrance into equipment. When these devices are used and the procedures are the same for both cable types, the methods will not be repeated in this standard. Methods unique to optical fiber cable or that differ from those for electric cable shall be in accordance with this standard. Optical fiber cable entrance into M24728, M24142/6, and M24142/7 boxes, when used for the purpose of fiber optic interconnection or tube routing, shall use qualified and approved nylon stuffing tubes or MCPs, unless otherwise approved by NSWCDD (see 6.5).

5.2.1 Nylon stuffing tubes. Conventional cable and BOF cable entry into spraytight, splash-proof, molded plastic, and watertight equipment via nylon stuffing tubes shall be in accordance with Method 2A1 and Method 2G1, respectively. Unused penetrations in FOICBs or TRBs shall be sealed via nylon stuffing tube with a sealing plug installed in accordance with Method 2A1 or Method 2G1.

5.2.2 Multiple cable penetrator (MCP).

5.2.2.1 Integral MCPs. Conventional cable and BOF cable entry into equipment via integral MCPs shall be in accordance with Method 2B1 or Method 2B2, and Method 2H1 or Method 2H2, respectively. When an MCP is used, the wedgepack, as described in Method 2B1, Method 2B2, Method 2H1, and Method 2H2, shall be placed in the center position of the MCP.

5.2.2.2 MIL-DTL-24705/4, inserted frame MCPs. Conventional cable and BOF cable entry into equipment via inserted MIL-DTL-24705/4 frame MCPs shall be in accordance with Method 2B3 and Method 2H3, respectively.

5.2.3 Cable clamps. Cable entry into equipment via cable clamps shall not be permitted.

5.2.4 BOF cable density limitations. To prevent overpopulation of FOICBs and TRBs, table 2-I defines the current maximum density of 7-tube BOF cables permitted for the common size FOICBs and TRBs and other types of FOICBs and TRBs.

TABLE 2-I. Fiber optic interconnection box (FOICB) and TRB maximum BOF cable density.

Box type	Maximum number of MIL-PRF-85045/25 cables	Maximum number of individual tubes per box
MIL-I-24728/1 (FOICB)	2	14
MIL-I-24728/2 (FOICB)	2	14
MIL-I-24728/3 (FOICB)	4	28
MIL-E-24142/6-012 (TRB)	8	56
MIL-E-24142/6-014 (TRB)	8	56
MIL-E-24142/7-001 (TRB)	14	98
MIL-DTL-24728/9 (Combo)	22	154
MIL-DTL-24728/10 (Combo)	14	98

5.3 Interconnection organization.

5.3.1 Conventional cable. The organization of the connectors and adapters and the shaping of the OFCCs and buffered fibers within the interconnection box shall be in accordance with Method 2C1.

5.3.2 BOF cable. The forming, routing, and shaping of BOF tubes within TRBs and interconnection boxes shall be in accordance with Method 2I1, Method 2I2, and Method 2I3 for 8-millimeter BOF tubing and Method 2C1 and Method 2C2 for 5-millimeter tubing. The organization of the connectors and adapters and the shaping of the loose tube furcation cables within the interconnection box shall be in accordance with Method 2C1 and Method 2C2. Connections between 8-millimeter and 5-millimeter BOF tubing shall be in accordance with Method 2L1. Transition to 5-millimeter tube shall only be used to permit transition for improved routing and immediate termination. It may be necessary to perform fiber blowing operations prior to attaching 5-millimeter tubing to blow paths. Empty individual BOF tubes with cuts, perforations, or other damage that compromises the tube integrity shall be cut back beyond the point of damage and end sealed in accordance with Method 2J1. Populated individual BOF tubes with cuts, perforations, or other damage that compromises the tube integrity shall have the existing fiber removed, the damaged section removed, and the fiber reinstalled if possible. Otherwise, the fiber shall be reinstalled in an alternate tube and the original tube cut back and end sealed in accordance with Method 2J1.

5.4 Fusion splice organization. The forming, routing, and shaping of buffered fiber and BOF in fusion splice trays shall be in accordance with Method 2K1 or Method 2K2. Fusion splices shall adhere to M24623/6 splices, with 250-, 500-, or 900-micron protective jacket (buffered fiber) and shall be housed within an M24728/8 splice tray and splice tray holder module inside an M24728 FOICB or a shock isolated equipment rack. If 5-millimeter BOF tubing is the chosen method of delivering BOF to the fusion splice trays, the 5-millimeter tubing shall be attached to the splice tray in accordance with Method 2M1.

5.5 BOF tube furcation unit fabrication. Fabricated BOF tube furcation units shall be constructed in accordance with Method 2E1. Other tube furcation units shall be in accordance with A-A-59729.

5.6 BOF tube furcation unit installation. BOF tube furcation units shall be used to provide a transition for fibers from BOF cable to fiber optic connectors or fusion splice trays. Furcation units shall be installed in accordance with Method 2F2 or Method 2F3.

5.7 BOF tube end sealing. The sealing of unused BOF tube ends shall be in accordance with Method 2J1.

6. NOTES

(This section contains information of a general or explanatory nature that may be helpful, but is not mandatory.)

6.1 Intended use. The methods for equipment mounting and cable entrance to equipment depicted in this standard have been developed, tested, and approved so that the shipboard fiber optic installations described can withstand the environmental and operational conditions aboard U.S. Navy vessels. They are intended primarily for new construction; however, they are applicable for conversion, alteration, or repair of existing ships.

6.2 Acquisition requirements. Acquisition documents should specify the following:

a. Title, number, and date of this standard.

6.3 Standard method designation. To simplify the usage of this standard, an alphanumeric designation system was developed to identify and locate a given method. The methods were grouped together by function as follows:

Group A: Conventional cable entrance to equipment via nylon stuffing tubes

Group B: Conventional cable entrance to equipment via MCP

Group C: Conventional cable and buffered fiber forming and shaping

Group D: Splice assembly and alignment

Group E: BOF tube furcation unit fabrication

Group F: BOF tube furcation unit installation

Group G: BOF cable entrance to equipment via nylon stuffing tubes

Group H: BOF cable entrance to equipment via MCP

Group I: BOF cable forming, routing, and shaping

Group J: BOF tube end sealing

Group K: Fusion splicing, fiber routing, shaping forming

Group L: 8- to 5-millimeter BOF tube transition

Group M: 5-millimeter BOF tube to splice tray installation

The designation system was completed as follows:

2	B	1	-	
MIL-STD-2042 part number	Functional group	Method number within group	-	Alternate procedure within method

Thus, Method 2B1 indicates there is no alternate procedure for Method 1 of Group B in Part 2 (MIL-STD-2042-2) of MIL-STD-2042.

6.4 Subject term (key word) listing.

Component

Entrance into equipment

Interconnection box

Interconnection box selection

Interconnection organization

Nameplates and marking

Splice assembly and alignment

6.5 Proposed new methods or method modifications. As specified (see 4.4), proposed new methods or proposed modifications of existing methods should be submitted to DLGR_NSWC_FO_ENG@navy.mil or Department of the Navy, Naval Surface Warfare Center, Dahlgren Division, ATTN: Fiber Optic Engineering Manager, 17214 Avenue B, Suite 126, Dahlgren, VA 22448-5147.

6.6 Dahlgren shipboard fiber optics website. The NSWCDD fiber optic website houses additional shipboard fiber optic information and policy letters that may be applicable to the requirements in this standard. Due to the dynamic nature of web addresses, the current website URL can be obtained by e-mailing DLGR_NSWC_FOWEB@navy mil with the subject line “WEBSITE URL REQUEST”. An automated reply will contain the current web address.

6.7 Changes from previous issue. Marginal notations are not used in this revision to identify changes with respect to the previous issue due to the extent of the changes.

METHOD 2A1
CONVENTIONAL CABLE ENTRANCE TO EQUIPMENT VIA NYLON STUFFING TUBES

1. SCOPE

1.1 Scope. This method describes a procedure for optical fiber cable entry to FOCT and other equipment through nylon stuffing tubes.

2. DOCUMENTS APPLICABLE TO METHOD 2A1

2.1 General. The documents listed in this section are specified in Method 2A1 of this standard. This section does not include documents cited in other sections of this standard or recommended for additional information or as examples. While every effort has been made to ensure the completeness of this list, document users are cautioned that they must meet all specified requirements of documents cited in Method 2A1 of this standard, whether or not they are listed.

2.2 Government documents.

2.2.1 Specifications, standards, and handbooks. The following specifications, standards, and handbooks form a part of this document to the extent specified herein. Unless otherwise specified, the issues of these documents are those cited in the solicitation or contract.

DEPARTMENT OF DEFENSE STANDARDS

MIL-STD-2042-5 - Fiber Optic Cable Topology Installation Standard Methods for Surface Ships and Submarines (Connectors and Interconnections) (Part 5 of 7 Parts)

(Copies of this document are available online at http://quicksearch.dla.mil.)

2.3 Non-Government publications. The following documents form a part of this document to the extent specified herein. Unless otherwise specified, the issues of these documents are those cited in the solicitation or contract.

AMERICAN SOCIETY FOR TESTING AND MATERIALS (ASTM)

ASTM F1836M - Standard Specification for Stuffing Tubes, Nylon, and Packing Assemblies (Metric)

(Copies of this document are available online at www.astm.org.)

2.4 Order of precedence. Unless otherwise noted herein or in the contract, in the event of a conflict between the text of this document and the references cited herein, the text of this document takes precedence. Nothing in this document, however, supersedes applicable laws and regulations unless a specific exemption has been obtained.

3. REQUIRED EQUIPMENT AND MATERIALS

3.1 Equipment and materials. The equipment and materials in table 2A1-I shall be used to perform this procedure. More detail on approved sources for items with reference numbers can be found on the Dahlgren shipboard fiber optics website (see 6.6). The list on which items appear is indicated by the two-letter prefix as follows:

a. TL = Recommended Tool List

b. TS = Recommended Test Equipment List

TABLE 2A1-I. Equipment and materials.

Reference #	Description	Quantity
TL-0071	Safety glasses	1
TL-0069	Ruler	1
	Deburring tool (or equivalent)	1
	Paint scraper	1
	Emery cloth	As required
TL-0012	Cable jacket stripping tool	1
TL-0045	Aramid yarn shears	1
	Open end wrench (sized to fit locknut)	1
	Spanner wrench (sized to fit cap)	1
	RTV silicone rubber (Silastic 731, or equal [see 4.6])	As required
	Primer (type to suit metal)	As required
	Talc (soap stone)	As required
	Nylon stuffing tube, packing, and O-ring (see tables 2A1-II or 2A1-III)	As required
TL-0002 or TL-0044	Isopropyl alcohol, 99% pure anhydrous or alcohol pad, sealed	1
TL-0016	Wipes (if not using pre-wetted alcohol pads)	As required
TL-0013	Canned air	As required
NOTE: Products to be considered for addition to the recommended tool or test equipment shall obtain approval as specified (see 6.5).		

4. PROCEDURE

4.1 Safety summary. The following safety precautions shall be observed:

a. Wear safety glasses at all times when handling bare fibers.

b. Do not touch the ends of bare fiber as they may be razor sharp. Wash your hands thoroughly after handling bare fibers.

c. When visually inspecting an optical fiber, do not stare into the end of a fiber connected to a laser source or LED.

4.2 Procedure. The following steps shall be performed:

NOTE: Packing assemblies and O-rings are not furnished with stuffing tubes. They must be ordered separately by the installing activity to suit installations.

Step 1. Select the stuffing tube, packing, and O-ring in accordance with tables 2A1-II and 2A1-III.

TABLE 2A1-II. Nylon stuffing tube sizes for optical fiber cable.

Cable type	Cable OD mm (inch) nominal	Tube size	Packing assembly P/N ASTM F1836M/	Packing assembly opening mm (inch)
4-fiber	8.1 (0.32)	2	17-001	8.26 (0.325)
8-fiber	11.1 (0.44)	3	18-018	12.0 (0.472)
18-fiber	14.3 (0.56)	4	19-003	14.8 (0.584)
36-fiber	20.8 (0.82)	5	20-003	21.7 (0.853)

TABLE 2A1-III. Nylon stuffing tube data.

Stuffing tube sizes		Tube size 2	Tube size 3	Tube size 4	Tube size 5
Straight tube	Tube Part Number (P/N) ASTM F1836M/	1-002	1-003	1-004	1-006
	O-ring P/N ASTM F1836M-	214	216	218	226
National Pipe Thread (NPT) Tube	Tube P/N ASTM F1836M/	3-002	3-003	3-004	3-005
	NPT Tap mm (inch)	19 (0.75)	25 (1.0)	25 (1.0)	38 (1.5)
"Y" Tube	Tube P/N ASTM F1836M/	4-02	4-03	4-04	N/A
	O-ring P/N ASTM F1836M-	214	216	220	N/A

WARNING: Wear safety glasses during deburring to avoid possible eye injury.

Step 2. Inspect the hole in the enclosure and remove any burrs or irregularities using the deburring tool.

Step 3. For steel enclosures where the roughness is greater than a 125 micro inch finish (not required on aluminum enclosures), remove the paint using a paint scraper and clean the surface with emery paper approximately 13 millimeters (0.5 inch) wide around the hole on the exterior of the enclosure. Apply one coat of primer and allow to set. Dust-coat the surface with talc if the primer is not thoroughly dried at the time of the tube installation. Remove the cover and proceed to step 4 (straight), 5 ("Y" or angle), or 7 (NPT) below, as applicable.

Step 4. With straight tubes, insert the stuffing tube body into the hole from the inside of the enclosure (see figure 2A1-1). If necessary, remove the interior fitting from the enclosure. Proceed to step 6 below.

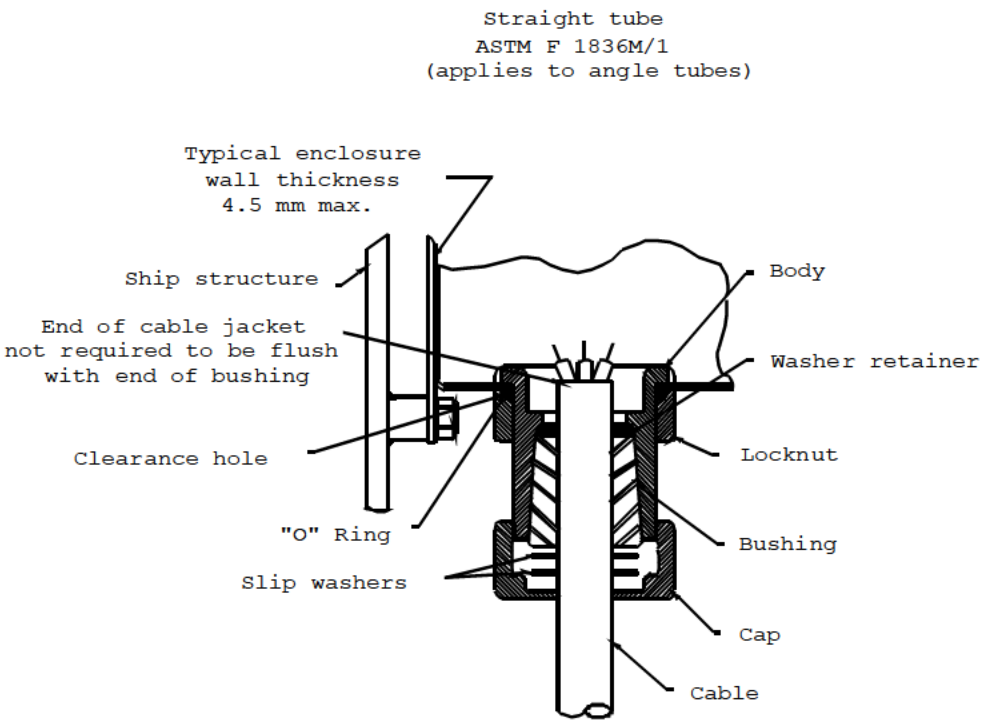

FIGURE 2A1-1. Straight tube.

Step 5. With "Y" and angle tubes, insert the stuffing tube body into the hole from the outside of enclosure (see figures 2A1-2 and 2A1-3). The excess length protruding into the enclosure may be removed.

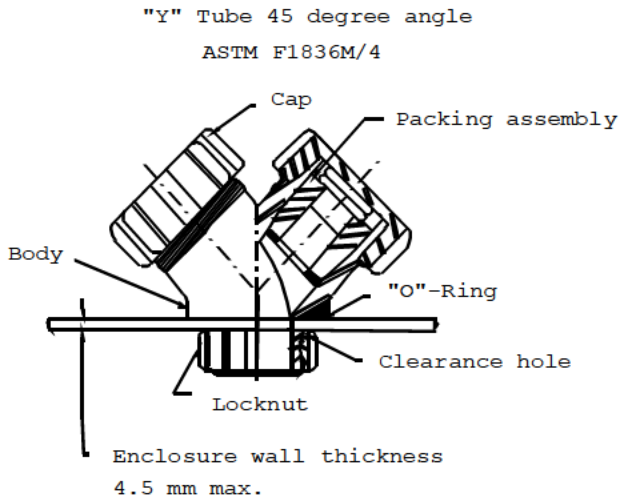

FIGURE 2A1-2. "Y" tube.

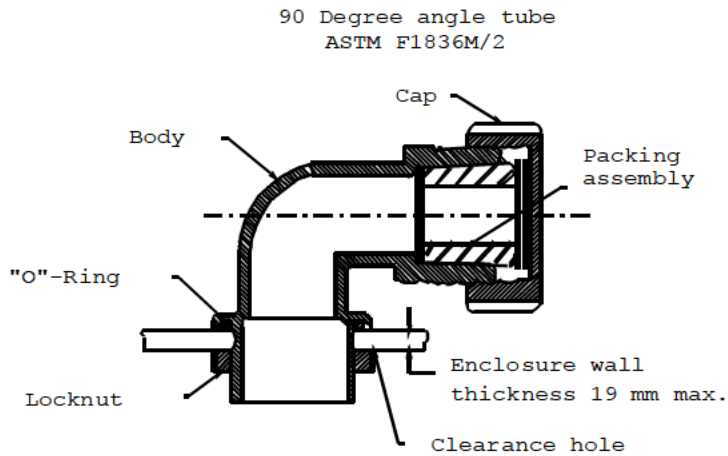

FIGURE 2A1-3. 90-degree angle tube.

Step 6. Screw the locknut onto the body and tighten with a wrench against the O-ring sufficiently to obtain plastic-to-metal contact of the stuffing tube and the enclosure. In cases where this plastic-to-metal contact cannot be obtained, tighten the locknut until the threads start to skip. This is considered a satisfactory indication of tightness. Proceed to step 8 below.

NOTE: Hold the stuffing tube body while tightening the locknut to prevent turning.

Step 7. With NPT tubes, screw the tube into the enclosure pipe thread and tighten it sufficiently to obtain a seal at the threads (see figure 2A1-4).

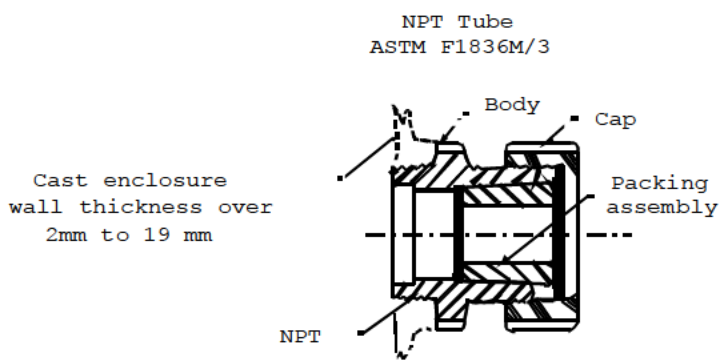

FIGURE 2A1-4. NPT tube.

Step 8. Measure the length of the cable jacket to be removed:

a. For unterminated cables, measure the distance required to route OFCCs from innermost portion of the stuffing tube completely around the interior of the interconnection box (or to the furthermost connection point in the end user equipment), add approximately 130 millimeters (5 inches) if patch panels are to be used, add approximately 840 millimeters (33 inches) if fusion splice trays are to be used, and mark cable outer jacket.

b. For terminated cable assemblies in equipment, measure the distance required to route OFCCs from innermost portion of the stuffing tube to the furthermost connection point in the equipment, add approximately 80 millimeters (3 inches), and mark the cable outer jacket. For terminated cable assemblies in an interconnection box, measure the distance required to route OFCCs from innermost portion of the MCP directly into the interconnection section of the box, one-half of the way around the inside of the box, and then to the furthest potential connection point. Add approximately 80 millimeters (3 inches) and mark the cable outer jacket.

Step 9. Slide the stuffing tube parts onto the cable in the following order:

a. Cap

b. Two slip washers

c. Rubber bushing

d. Bottom washer

Step 10. Slide the parts up the cable beyond the mark and, if not already done, remove the outer jacket up to the mark using the cable stripper.

CAUTION: Do not cut or nick OFCCs.

Cut off the cable aramid yarn strength members and exposed central member, if present, using aramid yarn shears.

NOTE: If cable strength member capture is planned, leave approximately 100 millimeters (4 inches) of the aramid yarn strength members protruding from the cable jacket.

Step 11. Remove the waterblocking material, clean the OFCCs using a wipe dampened with alcohol, and blow dry as necessary.

Step 12. Insert the cable through the stuffing tube and into the enclosure so that the outer jacket will protrude completely through the rubber bushing. Slide the washers and bushing down the cable into the tube.

NOTE: When necessary to pass an airtight test, apply RTV silicone rubber to the bushing.

Step 13. Slide the cap down the cable, screw it onto the tube, and tighten it sufficiently using the spanner wrench to compress the bushing to form a tight seal between the cable and the tube.

NOTE: Hold the tube body when tightening the cap to prevent breaking the watertight seal.

NOTE: After the bushing has been compressed for approximately 24 hours, retighten it to ensure the seal is maintained.

Step 14. If required, wind the exposed aramid yarn strength member under a screw lug attached beside the stuffing tube and tighten the screw lug.

NOTE: This step is only performed when additional strain relief is required beyond that provided by the stuffing tube assembly.

NOTE: Sealing plugs are for use in service to seal nylon stuffing tubes from which cables have been removed. When installing sealing plugs, the cable bushing shall be discarded but the nylon washers shall be retained and left in the stuffing tube.

Step 15. Install terminations on the OFCCs in accordance with MIL-STD-2042-5 or attach OFCCs to a fusion splice tray in accordance with Method 2K1 or Method 2K2 and fusion splice in accordance with MIL-STD-2042-5, Method 5C2.

METHOD 2B1
CONVENTIONAL CABLE ENTRANCE TO EQUIPMENT VIA INTEGRAL MCP WITH MIL-DTL-24705/1 TYPE INSERT BLOCKS

1. SCOPE

1.1 Scope. This method describes a procedure for optical fiber cable entry to M24728/1, /2, and /3 FOICBs and other equipment through MCPs integral to the equipment being entered using MIL-DTL-24705/1 type insert blocks. For insert blocks with peel away layers, see Method 2B2.

2. DOCUMENTS APPLICABLE TO METHOD 2B1

2.1 General. The documents listed in this section are specified in Method 2B1 of this standard. This section does not include documents cited in other sections of this standard or recommended for additional information or as examples. While every effort has been made to ensure the completeness of this list, document users are cautioned that they must meet all specified requirements of documents cited in Method 2B1 of this standard, whether or not they are listed.

2.2 Government documents.

2.2.1 Specifications, standards, and handbooks. The following specifications, standards, and handbooks form a part of this document to the extent specified herein. Unless otherwise specified, the issues of these documents are those cited in the solicitation or contract.

DEPARTMENT OF DEFENSE SPECIFICATIONS

MIL-DTL-24705/1	-	Penetrators, Multiple Cable, Electric Cable, Rectangular Metal Frame, Square-Faced Blocks
MIL-I-24728/1	-	Interconnection Box, Fiber Optic, Submersible, 254 × 330 mm
MIL-I-24728/2	-	Interconnection Box, Fiber Optic, Submersible, 308.4 × 609.6 mm
MIL-I-24728/3	-	Interconnection Box, Fiber Optic, Submersible, 406.4 × 863.6 mm

(Copies of these documents are available online at http://quicksearch.dla.mil/.)

2.3 Order of precedence. Unless otherwise noted herein or in the contract, in the event of a conflict between the text of this document and the references cited herein, the text of this document takes precedence. Nothing in this document, however, supersedes applicable laws and regulations unless a specific exemption has been obtained.

3. REQUIRED EQUIPMENT AND MATERIALS

3.1 Equipment and materials. The equipment and materials in table 2B1-I shall be used to perform this procedure. More detail on approved sources for items with reference numbers can be found on the Dahlgren shipboard fiber optics website (see 6.6). The list on which items appear is indicated by the two-letter prefix as follows:

a. TL = Recommended Tool List

b. TS = Recommended Test Equipment List

TABLE 2B1-I. Equipment and materials.

Reference #	Description	Quantity
TL-0071	Safety glasses	1
TL-0069	Ruler	1
	Tallow (Nelson AA0099, or equal [see 4.6])	As required
	MIL-DTL-24705/1-BN insert blocks (see table 2B1-II)	As required
	Wedgepack (Roxtec ARW0000601021, or equal [see 4.6])	1
	Open end wrench (sized to fit wedgepack nut)	1
TL-0002 or TL-0044	Isopropyl alcohol, 99% pure anhydrous or alcohol pad, sealed	1
TL-0016	Wipes (if not using pre-wetted alcohol pads)	As required
TL-0013	Canned air	As required
TL-0012	Cable jacket stripping tool	1
TL-0045	Aramid yarn shears	1
NOTE: Products to be considered for addition to the recommended tool or test equipment shall obtain approval as specified (see 6.5).		

4. PROCEDURE

4.1 Safety summary. The following safety precautions shall be observed:

a. Safety glasses shall be worn at all times when handling bare fibers.

b. Do not touch the ends of bare fiber. Wash hands thoroughly after handling bare fibers.

c. When visually inspecting an optical fiber, do not stare into the end of a fiber connected to a laser source or LED.

4.2 Procedure. The following steps shall be performed:

Step 1. Select MCP blocks (see table 2B1-II).

Step 2. Measure the length of the cable jacket to be removed:

a. For unterminated cables, measure the distance required to route OFCCs from innermost portion of the MCP completely around the interior of the interconnection box (or to the furthermost connection point in the end user equipment), add approximately 130 millimeters (5 inches) if patch panels are used, add approximately 840 millimeters (33 inches) if fusion splice trays are used, and mark the cable outer jacket.

b. For terminated cable assemblies in equipment, measure the distance required to route OFCCs from the innermost portion of the MCP to the furthermost connection point in the equipment, add approximately 80 millimeters (3 inches), and mark the cable outer jacket. For terminated cable assemblies in an interconnection box, measure the distance required to route OFCCs from innermost portion of the MCP directly into the interconnection section of the box, one-half of the way around the inside of the box, and then to the furthest potential connection point. Add approximately 80 millimeters (3 inches) and mark the cable outer jacket.

Step 3. Remove the outer jacket up to the mark using the cable stripper.

CAUTION: Do not cut or nick OFCCs.

Cut off the cable aramid yarn strength members and exposed central member, if present, using aramid yarn shears.

Step 4. Remove the waterblocking material and clean the OFCCs using a wipe dampened with alcohol and blow dry as necessary.

TABLE 2B1-II. MCP data and insert block sizes for optical fiber cables.

Cable type	**4-fiber**	**8-fiber**	**18-fiber**	**36-fiber**
Cable OD mm (inch), nominal	8.1 (0.32)	11.1 (0.44)	14.3 (0.56)	20.8 (0.82)
Primary insert block P/N M24705/1-BN	1508	2011	2014	3021
Alternate insert block P/N M24705/1-BN	2008	N/A	N/A	N/A
Blanking insert block P/N M24705/1-BN	15	20	20	30
Alternate blanking insert block P/N M24705/1-BN	20	N/A	N/A	N/A

CAUTION: Do not exceed the cable minimum bend diameter of 8 times cable OD for short-term bends and 16 times the cable OD for long-term bends.

Step 5. Feed the cables into the interconnection box or the other equipment through the cable penetration opening.

Step 6. Liberally apply tallow to the inside and outside portion of the insert blocks, the inner portion of the MCP frame, and the sides of the wedgepack. Make sure that tallow is placed in the corners of the MCP frame.

NOTE: If MCP insert blocks are being used to fill out the MCP space, the block shall be separated and tallow applied to the inside surfaces. Normally, the core remains attached to one side of the block; do not attempt to separate the core from the block. Where the core is loose or not attached to one side of the split block, tallow shall also be thoroughly applied to all surfaces of the core or a new block shall be used.

NOTE: The wedgepack may be removed and disassembled to apply the tallow.

Step 7. Reinstall the wedgepack (if removed) and install the insert blocks on the cables so that the outer jacket protrudes 13 millimeters (0.5 inch) to 25 millimeters (1 inch) inside the equipment. Install the cable insert blocks so that the gap between the insert block halves is parallel to the wedgepack. Install the insert blocks into the MCP frame so that the insert blocks are flush with the outside edge of the MCP frame. Fill all positions in the frame with insert blocks (either cable insert blocks or blanking [solid] insert blocks [see figure 2B1-1]).

NOTE: Incoming cables may be installed on one end of the enclosure and outgoing cables on the opposite end for large enclosures. Where only one penetrator is used, incoming cables may be installed on one side of the wedgepack and outgoing cables on the opposite side.

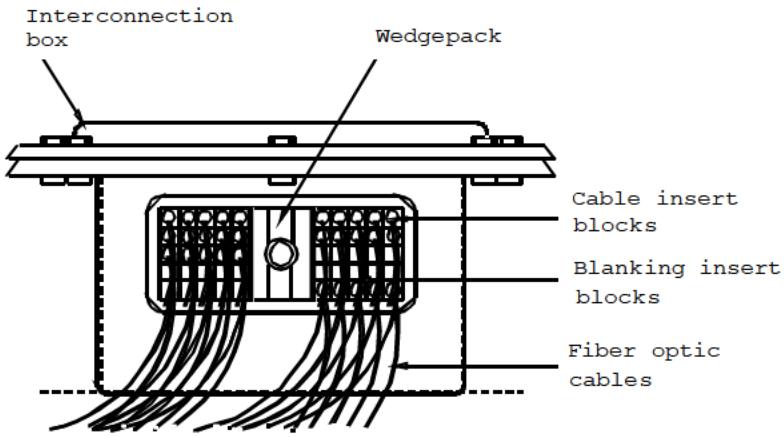

FIGURE 2B1-1. Interconnection box integral MCP – (typical).

Step 8. Tighten the nut on the wedgepack to compress the insert, until the outside wedgepack metal plate is almost flush with the bottom of the MCP frame blocks in the frame, using a wrench. Continue to tighten the wedgepack nut until a torque between 5.7 and 16.9 N-m (50 and 150 inch-pounds) is reached.

NOTE: The wedgepack is fully tightened when the length of the pack is the same as the depth of the MCP frame.

Step 9. After the blocks have been compressed for approximately 24 hours, retighten the nut to ensure that the seal is maintained.

Step 10. Install terminations on the OFCCs in accordance with MIL-STD-2042-5 or perform one of the fusion splice methods in this standard.

METHOD 2B2
CONVENTIONAL CABLE ENTRANCE TO EQUIPMENT VIA INTEGRAL MCP WITH PEEL AWAY TYPE INSERT BLOCKS

1. SCOPE

1.1 Scope. This method describes a procedure for optical fiber cable entry to M24728/1, /2, and /3 FOICBs and other equipment through MCPs integral to the equipment being entered using the peel away type of insert blocks. For M24705/1 insert blocks (no peel away layers), see Method 2B1.

2. DOCUMENTS APPLICABLE TO METHOD 2B2

2.1 General. The documents listed in this section are specified in Method 2B2 of this standard. This section does not include documents cited in other sections of this standard or recommended for additional information or as examples. While every effort has been made to ensure the completeness of this list, document users are cautioned that they must meet all specified requirements of documents cited in Method 2B2 of this standard, whether or not they are listed.

2.2 Government documents.

2.2.1 Specifications, standards, and handbooks. The following specifications, standards, and handbooks form a part of this document to the extent specified herein. Unless otherwise specified, the issues of these documents are those cited in the solicitation or contract.

DEPARTMENT OF DEFENSE SPECIFICATIONS

MIL-I-24728/1	-	Interconnection Box, Fiber Optic, Submersible, 254 × 330 mm
MIL-I-24728/2	-	Interconnection Box, Fiber Optic, Submersible, 308.4 × 609.6 mm
MIL-I-24728/3	-	Interconnection Box, Fiber Optic, Submersible, 406.4 × 863.6 mm
MIL-PRF-85045/17	-	Cable, Fiber Optic, Eight Fibers, Enhanced Performance, Cable Configuration Type 2 (OFCC), Application B (Shipboard), Cable Class SM and MM
MIL-PRF-85045/18	-	Cable, Fiber Optic, Four Fibers, Enhanced Performance, Cable Configuration Type 2 (OFCC), Application B (Shipboard), Cable Class SM and MM
MIL-PRF-85045/20	-	Cable, Fiber Optic, Thirty-Six Fibers, Enhanced Performance, Cable Configuration Type 2 (OFCC), Application B (Shipboard), Cable Class SM and MM
MIL-PRF-85045/22	-	Cable, Fiber Optic, Eighteen Fibers, Standard and Enhanced Performance, Cable Configuration Type 2 (OFCC), Application B (Shipboard), Cable Class SM and MM

DEPARTMENT OF DEFENSE STANDARDS

MIL-STD-2042-5	-	Fiber Optic Cable Topology Installation Standard Methods for Surface Ships and Submarines (Connectors and Interconnections) (Part 5 of 7 Parts)

(Copies of these documents are available online at http://quicksearch.dla.mil/.)

2.3 Order of precedence. Unless otherwise noted herein or in the contract, in the event of a conflict between the text of this document and the references cited herein, the text of this document takes precedence. Nothing in this document, however, supersedes applicable laws and regulations unless a specific exemption has been obtained.

3. REQUIRED EQUIPMENT AND MATERIALS

3.1 Equipment and materials. The equipment and materials in table 2B2-I shall be used to perform this procedure. More detail on approved sources for items with reference numbers can be found on the Dahlgren shipboard fiber optics website (see 6.6). The list on which items appear is indicated by the two-letter prefix as follows:

a. TL = Recommended Tool List

b. TS = Recommended Test Equipment List

TABLE 2B2-I. Equipment and materials.

Reference #	Description	Quantity
TL-0071	Safety glasses	1
TL-0069	Ruler	1
	Tallow (Nelson AA0099, or equal [see 4.6])	As required
	Peel Away Style insert blocks (Roxtec RM Modules, or equal [see 4.6 and table 2B2-II])	As required
	Wedgepack (Roxtec ARW0000601021, or equal [see 4.6])	As required
	Open end wrench (sized to fit wedgepack nut)	1
TL-0002 or TL-0044	Isopropyl alcohol, 99% pure anhydrous or alcohol pad, sealed	1
TL-0016	Wipes (if not using pre-wetted alcohol pads)	As required
TL-0013	Canned air	As required
TL-0012	Cable jacket stripping tool	1
TL-0045	Aramid yarn shears	1
NOTE: Products to be considered for addition to the recommended tool or test equipment shall obtain approval as specified (see 6.5).		

4. PROCEDURE

4.1 Safety summary. The following safety precautions shall be observed:

a. Safety glasses shall be worn at all times when handling bare fibers.

b. Do not touch the ends of bare fiber. Wash hands thoroughly after handling bare fibers.

c. When visually inspecting an optical fiber, do not stare into the end of a fiber connected to a laser source or LED.

4.2 Procedure. The following steps shall be performed:

Step 1. Select MCP blocks (see table 2B2-II).

Step 2. Measure the length of the cable jacket to be removed:

a. For unterminated cables, measure the distance required to route OFCCs from innermost portion of the MCP completely around the interior of the interconnection box (or to the furthermost connection point in the end user equipment); add approximately 130 millimeters (5 inches) if patch panels are used; add approximately 840 millimeters (33 inches) if fusion splice trays are used, and mark the cable outer jacket.

b. For terminated cable assemblies in equipment, measure the distance required to route OFCCs from innermost portion of the MCP to the furthermost connection point in the equipment; add approximately 80 millimeters (3 inches) and mark the cable outer jacket. For terminated cable assemblies in an interconnection box, measure the distance required to route OFCCs from innermost portion of the MCP directly into the interconnection section of the box, one-half of the way around the inside of the box, and then to the furthest potential connection point. Add approximately 80 millimeters (3 inches) and mark the cable outer jacket.

Step 3. Remove the outer jacket up to the mark using the cable stripper.

CAUTION: Do not cut or nick OFCCs.

Cut off the cable aramid yarn strength members and exposed central member, if present, using aramid yarn shears.

Step 4. Remove the waterblocking material and clean the OFCCs using a wipe dampened with alcohol and blow dry as necessary.

TABLE 2B2-II. MCP data and insert block sizes for optical fiber cables.

Cable type	**M85045/18 4-fiber**	**M85045/17 8-fiber**	**M85045/22 18-fiber**	**M85045/20 36-fiber**
Cable OD mm (inch), nominal	8.1 (0.32)	11.1 (0.44)	14.3 (0.56)	20.8 (0.82)
Primary insert block P/N, (Roxtec P/N, or equal [see 4.6])	RM15w40	RM20w40	RM20w40	RM40 10-32
Peel away layers from each side, nominal. No core.	3	6	8	7

CAUTION: Do not exceed the cable minimum bend diameter of eight times cable OD for short-term bends and sixteen times the cable OD for long-term bends.

Step 5. Feed the cables into the interconnection box or the other equipment through the cable penetration opening.

Step 6. Separate the selected block for each cable into two halves. If the MCP insert block is being used to fill out the MCP space, skip to step 10.

Step 7. Remove the black core and discard.

Step 8. Remove the recommended number of layers from each half of the insert block as specified in table 2B2-II, and discard.

NOTE: Layers alternate colors (blue and black); each is considered a single layer.

NOTE: The recommended practice is to remove a single layer at a time.

NOTE: In the event that too many layers have been peeled away, do not try to reinsert layers. Discard material and begin again.

Step 9. Place the insert blocks around the cable.

NOTE: When each half is peeled away in accordance with table 2B2-II, a 0.1- to 1.0-millimeter (0.004- to 0.039-inch) gap should be present.

Step 10. Liberally apply tallow to the inside and outside portion of the insert blocks, the inner portion of the MCP frame, and the sides of the wedgepack. Make sure that the tallow is placed in the corners of the MCP frame.

NOTE: If MCP insert blocks are being used to fill out the MCP space, the block shall be separated and tallow applied to the inside surfaces. Normally, the core remains attached to one side of the block; do not attempt to separate the core from the block. Where the core is loose or not attached to one side of the split block, tallow shall also be thoroughly applied to all surfaces of the core or a new block shall be used.

NOTE: The wedgepack may be removed and disassembled to apply the tallow.

Step 11. Reinstall the wedgepack (if removed) and install the insert blocks on the cables so that the outer jacket protrudes 13 to 25 millimeters (0.5 to 1 inch) inside the equipment. Install the cable insert blocks so that the gap between the insert block halves is parallel to the wedgepack. Install the insert blocks into the MCP frame so that the insert blocks are flush with the outside edge of the MCP frame. Fill all positions in the frame with insert blocks (either cable insert blocks or blanking [solid] insert blocks [see figure 2B2-1]).

NOTE: Incoming cables may be installed on one end of the enclosure and outgoing cables on the opposite end for large enclosures. Where only one penetrator is used, incoming cables may be installed on one side of the wedgepack and outgoing cables on the opposite side.

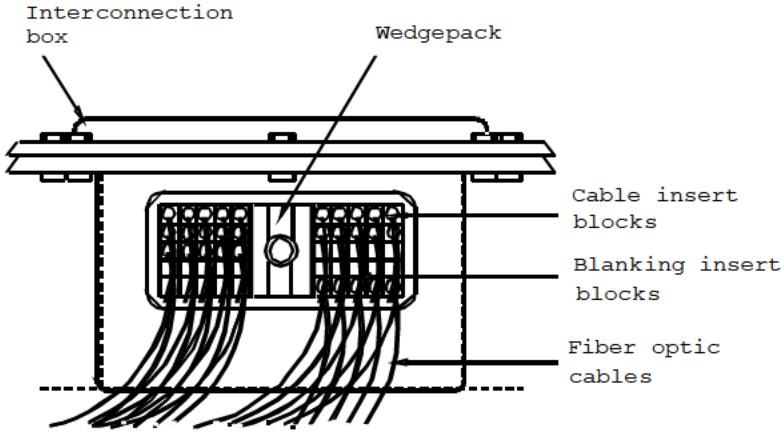

FIGURE 2B2-1. Interconnection box integral MCP – typical.

Step 12. Tighten the nut on the wedgepack to compress the insert, until the outside wedgepack metal plate is almost flush with the bottom of the MCP frame blocks in the frame, using a wrench. Continue to tighten the wedgepack nut until a torque between 5.7 and 16.9 Newton-meters (50 and 150 inch-pounds) is reached.

NOTE: The wedgepack is fully tightened when the length of the pack is the same as the depth of the MCP frame.

Step 13. After the blocks have been compressed for approximately 24 hours, retighten the nut to ensure that the seal is maintained.

Step 14. Install terminations on the installed cable in accordance with MIL-STD-2042-5 or perform one of the fusion splice methods in this standard.

METHOD 2B3
CONVENTIONAL CABLE ENTRANCE TO EQUIPMENT VIA M24705/4 INSERTED FRAME MCP AND PEEL AWAY TYPE INSERT BLOCKS

1. SCOPE

1.1 Scope. This method describes a procedure for optical fiber cable entry to FOCT and other equipment through frame-type MCPs inserted into the equipment being entered using an M24705/4 inserted frame MCP and peel away type of insert blocks. This method includes procedures for installation of the frame and blocks into an M24728/9 or M24728/10 FOICB.

2. DOCUMENTS APPLICABLE TO METHOD 2B3

2.1 General. The documents listed in this section are specified in Method 2B3 of this standard. This section does not include documents cited in other sections of this standard or recommended for additional information or as examples. While every effort has been made to ensure the completeness of this list, document users are cautioned that they must meet all specified requirements of documents cited in Method 2B3 of this standard, whether or not they are listed.

2.2 Government documents.

2.2.1 Specifications, standards, and handbooks. The following specifications, standards, and handbooks form a part of this document to the extent specified herein. Unless otherwise specified, the issues of these documents are those cited in the solicitation or contract.

DEPARTMENT OF DEFENSE SPECIFICATIONS

MIL-DTL-24705/4	-	Penetrators, Multiple Cable, Compact Rectangular Metal Frame and Blocks, Electrical and Fiber Optic Cable
MIL-DTL-24728/9	-	Interconnection Box, Cable Routing, Fiber Optic, Spraytight, 712 × 1372 mm
MIL-DTL-24728/10	-	Interconnection Box, Cable Routing, Fiber Optic, Spraytight, 712 × 1017 mm
MIL-PRF-85045/17	-	Cable, Fiber Optic, Eight Fibers, Enhanced Performance, Cable Configuration Type 2 (OFCC), Application B (Shipboard), Cable Class SM and MM
MIL-PRF-85045/18	-	Cable, Fiber Optic, Four Fibers, Enhanced Performance, Cable Configuration Type 2 (OFCC), Application B (Shipboard), Cable Class SM and MM
MIL-PRF-85045/20	-	Cable, Fiber Optic, Thirty-Six Fibers, Enhanced Performance, Cable Configuration Type 2 (OFCC), Application B (Shipboard), Cable Class SM and MM
MIL-PRF-85045/22	-	Cable, Fiber Optic, Eighteen Fibers, Standard and Enhanced Performance, Cable Configuration Type 2 (OFCC), Application B (Shipboard), Cable Class SM and MM

DEPARTMENT OF DEFENSE STANDARDS

MIL-STD-2042-5	-	Fiber Optic Cable Topology Installation Standard Methods for Surface Ships and Submarines (Connectors and Interconnections) (Part 5 of 7 Parts)

(Copies of these documents are available online at http://quicksearch.dla.mil/.)

2.3 Order of precedence. Unless otherwise noted herein or in the contract, in the event of a conflict between the text of this document and the references cited herein, the text of this document takes precedence. Nothing in this document, however, supersedes applicable laws and regulations unless a specific exemption has been obtained.

3. REQUIRED EQUIPMENT AND MATERIALS

3.1 Equipment and materials. The equipment and materials in table 2B3-I shall be used to perform this procedure. More detail on approved sources for items with reference numbers can be found on the Dahlgren shipboard fiber optics website (see 6.6). The list on which items appear is indicated by the two-letter prefix as follows:

a. TL = Recommended Tool List

b. TS = Recommended Test Equipment List

TABLE 2B3-I. Equipment and materials.

Reference #	Description	Quantity
TL-0071	Safety glasses	1
TL-0069	Ruler	1
	Tallow (Nelson AA0099, or equal [see 4.6])	As required
	M24705/4 insert blocks (Roxtec CM modules IAW table 2B3-II, or equal [see 4.6])	As required
	M24705/4-FA01 frame (Roxtec CF32 frame kit, or equal [see 4.6])	As required
	Socket torque wrench	1
	Metric hex key, 5 mm	1
TL-0002 or TL-0044	Isopropyl alcohol, 99% pure anhydrous or alcohol pad, sealed	As required
TL-0016	Wipes (if not using pre-wetted alcohol pads)	As required
TL-0013	Canned air	As required
TL-0012	Cable jacket stripping tool	1
TL-0045	Aramid yarn shears	1
NOTE: Products to be considered for addition to the recommended tool or test equipment shall obtain approval as specified (see 6.5).		

4. PROCEDURE

4.1 Safety summary. The following safety precautions shall be observed:

a. Safety glasses shall be worn at all times when handling bare fibers.

b. Do not touch the ends of bare fiber. Wash hands thoroughly after handling bare fibers.

c. When visually inspecting an optical fiber, do not stare into the end of a fiber connected to a laser source or LED.

4.2 Procedure. The following shall be performed:

Step 1. Insert the M24705/4-FA01 MCP frame from the outside of the FOICB. The gasket attached to the frame should seal against the FOICB.

Step 2. Insert the counterframe from the inside of the FOICB. The studs on the frame will protrude into the cabinet and will align with stud cutouts on the counterframe.

Step 3. Fasten the barrel nuts on the frame studs from the inside of the FOICB and tighten against the counterframe using a 5-millimeter metric hex key. Tighten all ten barrel nuts evenly.

NOTE: It is recommended that the six barrel nuts at the end of the counterframe be tightened first and four barrel nuts in the middle of the counterframe be tightened last.

NOTE: Do not over-tighten the barrel nuts or the nuts may push the counterframe aside and will not seat properly.

Step 4. Select MCP blocks in accordance with table 2B3-II.

Step 5. Measure the length of the cable jacket to be removed:

a. For unterminated cables, measure the distance required to route OFCCs from innermost portion of the MCP directly into the interconnection section of the box, one-half of the way around the inside of the box, and then to the furthest potential connection point. Add approximately 130 millimeters (5 inches) if patch panels are used or add approximately 840 millimeters (33 inches) if fusion splice trays are used, and mark the cable outer jacket.

b. For terminated cable assemblies, measure the distance required to route OFCCs from innermost portion of the MCP directly into the interconnection section of the box, one-half of the way around the inside of the box, and then to the furthest potential connection point. Add approximately 80 millimeters (3 inches) and mark the cable outer jacket.

Step 6. Remove the outer jacket up to the mark using the cable stripper.

CAUTION: Do not cut or nick OFCCs.

Cut off the cable aramid yarn strength members and exposed central member, if present, using aramid yarn shears.

Step 7. Remove the waterblocking material, clean the OFCCs using a wipe dampened with alcohol, and blow dry as necessary.

TABLE 2B3-II. MCP data and insert block sizes for optical fiber cables.

Cable type	**M85045/18 4-fiber**	**M85045/17 8-fiber**	**M85045/22 18-fiber**	**M85045/20 36-fiber**
Cable OD mm (inch), nominal	8.1 (0.32)	11.1 (0.44)	14.3 (0.56)	20.8 (0.82)
Primary Insert Block P/N (Roxtec P/N, or equal [see 4.6])	M24705/4-BN15 (CM15w40)	M24705/4-BN20 (CM20w40)	M24705/4-BN20 (CM20w40)	M24705/4-BN40 (CM40 10-32)
Peel away layers from each side, nominal. No core.	3	6	8	7

CAUTION: Do not exceed the cable minimum bend diameter of eight times cable OD for short-term bends and sixteen times the cable OD for long-term bends.

Step 8. Feed the cables into the interconnection box or the other equipment through the cable penetration opening.

Step 9. Separate the selected block for each cable into two halves. If the MCP insert block is being used to fill out the MCP space, skip to step 13.

NOTE: If MCP insert blocks are being used to fill out the MCP space (i.e., not being used for active cable entrance) do not separate the block into two halves, remove the solid core, or remove any layers. These blocks can be used for future growth.

Step 10. Remove the black core and discard.

Step 11. Remove the recommended number of layers from each half of the M24705/4 block, as specified in table 2B3-II, and discard.

NOTE: Layers alternate colors (blue and black); each is considered a single layer.

NOTE: The recommended practice is to remove a single layer at a time.

NOTE: In the event that too many layers have been peeled away, do not try to reinsert layers. Discard material and begin again.

Step 12. Place the insert blocks around the cable.

NOTE: When each half is peeled away in accordance with table 2B3-II, a 0.1- to 1.0-millimeter (0.004- to 0.039-inch) gap should be present.

Step 13. Liberally apply tallow to the inside and outside portion of the insert blocks and the inner portion of the MCP frame and to the sides of the compression device. Make sure that tallow is placed in the corners of the MCP frame.

NOTE: If MCP insert blocks are being used to fill out the MCP space, the block shall be separated and tallow applied to the inside surfaces. Normally, the core remains attached to one side of the block; do not attempt to separate the core from the block. Where the core is loose or not attached to one side of the split block, tallow shall also be thoroughly applied to all surfaces of the core or a new block shall be used.

Step 14. Install the insert blocks on the cables so that the outer jacket protrudes 13 to 25 millimeters (0.5 to 1 inch) inside the equipment. Install the insert blocks into the MCP frame so that the insert blocks are flush against the face of the MCP frame. Fill all positions in the frame with insert blocks (either cable insert blocks or blanking [solid] insert blocks [see figure 2B3-1]).

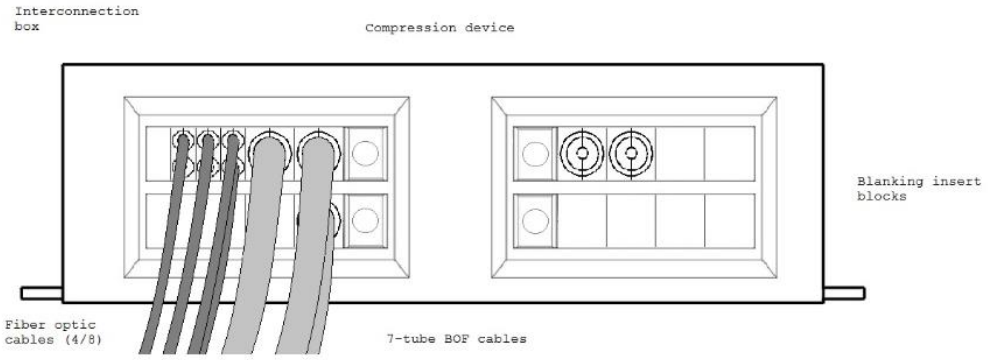

FIGURE 2B3-1. Interconnection box with M24705/4-FA01 frame type MCP (typical).

Step 15. The M24705/4-FA01 frame has two compression devices. Using the socket wrench, tighten the nut on the backside of the compression device to compress the insert. Continue to tighten the compression device nut until a torque between 8 and 12 Newton-meters (70 and 106 inch-pounds) is reached.

Step 16. Repeat step 15 for the remaining compression device.

Step 17. After the blocks have been compressed for approximately 24 hours, retighten the nut to ensure that the seal is maintained.

Step 18. Install terminations on the OFCCs in accordance with MIL-STD-2042-5 or perform one of the fusion splice methods in this standard.

METHOD 2C1
CONVENTIONAL CABLE, LOOSE TUBE FURCATION CABLES, BUFFERED FIBER, AND 5-MILLIMETER BOF TUBE FORMING AND SHAPING FOR M24728/1, /2, AND /3 FOICBs

1. SCOPE

1.1 Scope. This method describes a procedure for the forming and shaping of the OFCC, loose tube furcation cables, buffered fibers, and 5-millimeter BOF tubing within a M24728/1, /2, and /3 FOICB, or other equipment, and installation of connectors and splices in patch panels and splice trays, respectively.

2. DOCUMENTS APPLICABLE TO METHOD 2C1

2.1 General. The documents listed in this section are specified in Method 2C1 of this standard. This section does not include documents cited in other sections of this standard or recommended for additional information or as examples. While every effort has been made to ensure the completeness of this list, document users are cautioned that they must meet all specified requirements of documents cited in Method 2C1 of this standard, whether or not they are listed.

2.2 Government documents.

2.2.1 Specifications, standards, and handbooks. The following specifications, standards, and handbooks form a part of this document to the extent specified herein. Unless otherwise specified, the issues of these documents are those cited in the solicitation or contract.

DEPARTMENT OF DEFENSE SPECIFICATIONS

MIL-I-24728/1 - Interconnection Box, Fiber Optic, Submersible, 254 × 330 mm

MIL-I-24728/2 - Interconnection Box, Fiber Optic, Submersible, 308.4 × 609.6 mm

MIL-I-24728/3 - Interconnection Box, Fiber Optic, Submersible, 406.4 × 863.6 mm

DEPARTMENT OF DEFENSE STANDARDS

MIL-STD-2003-1 - Electric Plant Installation Standard Methods for Surface Ships and Submarines (Cable)

MIL-STD-2042-1 - Fiber Optic Cable Topology Installation Standard Methods for Surface Ships and Submarines (Cables) (Part 1 of 7 Parts)

MIL-STD-2042-5 - Fiber Optic Cable Topology Installation Standard Methods for Surface Ships and Submarines (Connectors and Interconnections) (Part 5 of 7 Parts)

(Copies of these documents are available online at http://quicksearch.dla.mil/.)

2.3 Non-Government publications. The following documents form a part of this document to the extent specified herein. Unless otherwise specified, the issues of these documents are those cited in the solicitation or contract.

SAE INTERNATIONAL

SAE-AMS-DTL-23053/5 - Insulation Sleeving, Electrical, Heat Shrinkable, Polyolefin, Flexible, Crosslinked

SAE-AS23190 - Wiring, Positioning, and Support Accessories

(Copies of these documents are available online at www.sae.org.)

2.4 Order of precedence. Unless otherwise noted herein or in the contract, in the event of a conflict between the text of this document and the references cited herein, the text of this document takes precedence. Nothing in this document, however, supersedes applicable laws and regulations unless a specific exemption has been obtained.

3. REQUIRED EQUIPMENT AND MATERIALS

3.1 Equipment and materials. The equipment and materials in table 2C1-I shall be used to perform this procedure. More detail on approved sources for items with reference numbers can be found on the Dahlgren shipboard fiber optics website (see 6.6). The list on which items appear is indicated by the two-letter prefix as follows:

a. TL = Recommended Tool List

b. TS = Recommended Test Equipment List

TABLE 2C1-I. Equipment and materials.

Reference #	Description	Quantity
TL-0071	Safety glasses	1
TL-0069	Ruler	1
	Self-cinching straps (SAE-AS23190)	As required
	Hook-and-loop type cable ties	As required
	Synthetic tubing	As required
	Heat shrink tubing (SAE-AMS-DTL-23053/5)	As required
TL-0101	Heat gun	1
	Open end wrench, 9/16 inch	1
TL-0002 or TL-0044	Isopropyl alcohol, 99% pure anhydrous or alcohol pad, sealed	As required
TL-0016	Wipes (if not using pre-wetted alcohol pads)	As required
TL-0013	Canned air	As required

NOTES:

1. Products to be considered for addition to the recommended tool or test equipment shall obtain approval as specified (see 6.5).
2. CAUTION: Throughout the fabrication process, cleanliness is critical to obtaining a high quality optical connection. Make sure that your hands and the work area are as clean as possible to minimize the ingress of dirt into the connections.

4. PROCEDURE

4.1 Safety summary. The following safety precautions shall be observed:

a. Wear safety glasses at all times when handling bare fibers.

b. Do not touch the ends of bare fiber. Wash hands thoroughly after handling bare fibers.

c. When visually inspecting an optical fiber, do not stare into the end of a fiber connected to a laser source or LED.

4.2 Procedure.

4.2.1 Forming and shaping. The following steps shall be performed:

CAUTION: For equipment containing BOF tubes, do not disengage mated BOF tube fittings. Disengaging utilized BOF tube fittings may damage/break the optical fibers contained within the BOF tubes.

Step 1. Verify that the procedures of Method 2A1, Method 2B1, or Method 2B2 have been completed. Verify for buffered fibers that the procedures of Method 2F2 or Method 2F3 have been performed.

Step 2. Open the enclosure cover and visually examine the OFCCs, loose tube furcation cables, and BOF tubes for cuts, nicks, kinks, or twists before forming them into groups.

CAUTION: Do not exceed the bend diameter of eight times the OFCC or loose tube furcation cable OD for short-term bends and sixteen times the OFCC or loose tube furcation cable OD for long-term bends.

CAUTION: Do not exceed a bend diameter of 13 centimeters (5 inches) for 8-millimeter BOF tubes. Do not exceed a bend diameter of 10 centimeters (4 inches) for 5-millimeter BOF tubes. BOF tubes will collapse if these bend diameters are exceeded.

Step 3. Observe the connection configuration chart or other approved drawing and form the fibers or 5-millimeter BOF tubes into groups based on their final destination. Groups may then be formed into bundles and shaped using hook-and-loop type cable ties.

NOTE: Self-cinching straps in accordance with the figure for lacing and wrapping wire bundles in electrical and electronic equipment in MIL-STD-2003-1 are not preferred, but may be used in place of hook-and-loop-type cable ties. Strap the groups loosely. Do not tighten down the self-cinching straps with the hand tool.

Step 4. Route the OFCC bundles/groups, loose tube furcation bundles/groups, and 5-millimeter BOF tube bundles/groups around the box, securing them to the box mounting brackets using hook-and-loop-type cable ties. Observe the following during routing (see figure 2C1-1):

a. Route all OFCCs, loose tube furcation cables, and 5-millimeter BOF tubes one-half of the way around the box and then to the termination point.

b. Use an indirect route when a direct route to a termination point would exceed the OFCC or loose tube furcation cable long-term bend diameter of sixteen times the OFCC or furcation cable OD.

c. Use an indirect route when a direct route to a termination point would exceed a bend diameter of 10 centimeters (4 inches) for a 5-millimeter BOF tube.

d. Do not let OFCC bundles/groups, loose tube furcation cable bundles/groups, and 5-millimeter BOF tube bundles/groups cross the splice tray holders or patch panels or in any other way obstruct access to the individual connectors, splices or adapters. Groups and bundles may be routed between the splice tray holder or connector patch panel modules, if necessary.

e. Protect OFCC bundles/groups, loose tube furcation cable bundles/groups, and 5-millimeter BOF tube bundles/groups from possible damage by sharp edges by the use of supporting brackets or by synthetic tubing at the point of the sharp edge.

NOTE: Self-cinching straps in accordance with the figure for lacing and wrapping wire bundles in electrical and electronic equipment in MIL-STD-2003-1 are not preferred, but may be used in place of hook-and-loop-type cable ties. Strap the groups loosely. Do not tighten down the self-cinching straps with the hand tool.

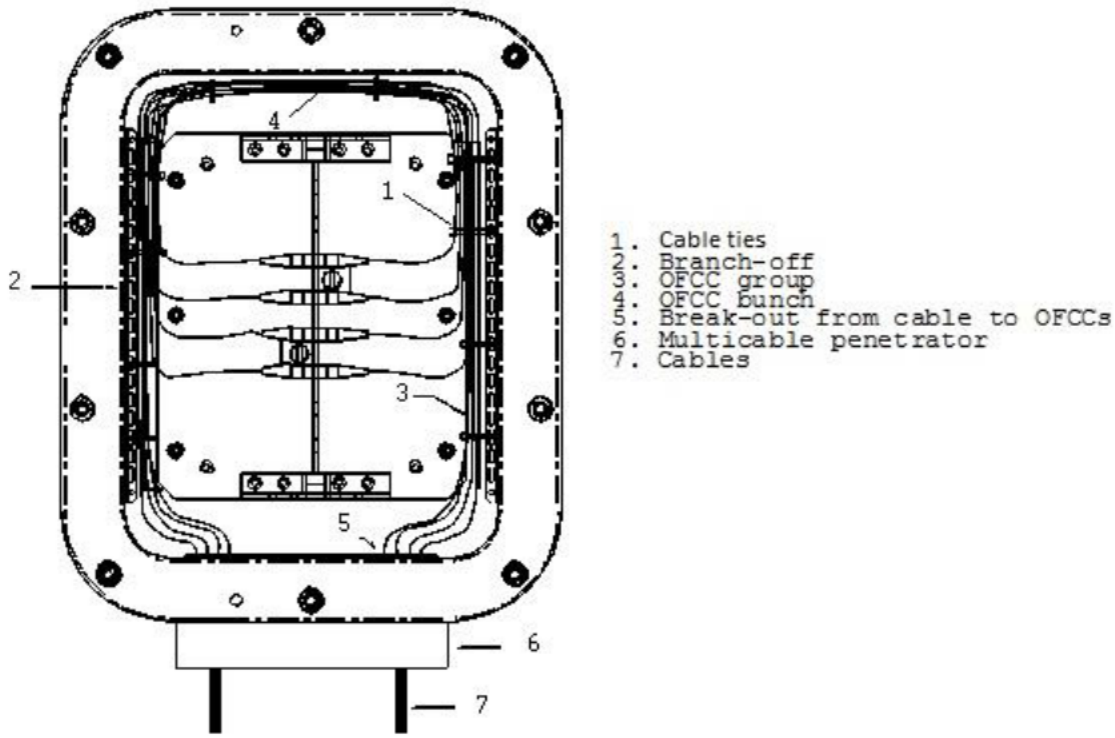

FIGURE 2C1-1. Forming and shaping (typical).

Step 5. For 5-millimeter BOF tubes, break out each separate 5-millimeter BOF tube from the group or bundle and, if not already done, slide the heat shrink tubing with the tube identification onto the 5-millimeter BOF tube.

NOTE: Do not heat tube identification labels on 5-millimeter BOF tubes.

Step 6. Break out each separate OFCC or loose tube furcation cable from the group or bundle and, if not already done, slide the heat shrink tubing with the fiber identification over the connector (if terminated) or onto the OFCC or loose tube furcation cable jacket.

NOTE: The heat shrink tubing should normally be pushed up the OFCC or loose tube furcation cable before the OFCC or loose tube furcation cable is terminated. If the heat shrink is not put on before the connector or splice, heat shrink is available that can be installed after the connector or splice is installed.

NOTE: Do not install heat shrink tubing on 900-micron fibers. In those cases where 900-micron fiber is present going into a splice, install the shrink tubing in a region where there is an OFCC.

Step 7. Holding the heat gun approximately 100 millimeters (4 inches) away from the OFCC or loose tube furcation cable and the heat shrink tubing, shrink the tubing.

CAUTION: Do not overheat the OFCC or loose tube furcation cable. Prolonged exposure of the OFCC or loose tube furcation cable jacket to temperatures in excess of 160 °C (320 °F) may damage the OFCC or furcation cable jacket. Discontinue heating of the tubing and allow the OFCC or loose tube furcation cable jacket to cool before reheating if the OFCC or furcation cable jacket shows any signs of bubbling or swelling.

CAUTION: Do not heat shrink tubing on 5-millimeter BOF tubes. Avoid exposing 5-millimeter BOF tubes to heat.

Step 8. Form the unterminated OFCC bundles and unterminated loose tube furcation cable bundles into a loop around the complete interior of the box, being careful not to kink or otherwise damage the OFCCs or loose tube furcation cables, and end seal the bundles in accordance with MIL-STD-2042-1, Method 1E1. Tie off the unterminated bundles such that they will not obstruct access to other components.

NOTE: Do not group or bundle the unterminated OFCCs or loose tube furcation cables with the terminated OFCCs and loose tube furcation cables. Unterminated OFCCs and loose tube furcation cables should be independently grouped, bundled, and strapped to the box mounting brackets from the terminated cables.

Step 9. OFCCs, loose tube furcation cables, and 5-millimeter BOF tubing destined for termination shall be routed to the destination location and prepared according to the following applicable scenarios:

a. Terminate connectors in accordance with MIL-STD-2042-5, Method 5B1. Use procedure 4.2.2 of this method for OFCCs and loose tube furcation cables to be installed in patch panels.

b. Use Method 2K1 or Method 2K2 for OFCCs and loose tube furcation cables to be installed in fusion splice trays.

c. Use Method 2M1 for 5-millimeter BOF tubes to be installed in fusion splice trays.

4.2.2 Connector installation in patch panel. The following steps shall be performed:

Step 1. Unscrew the two screws holding the patch panel and pull the panel forward until it catches in the slide.

NOTE: The panel can be completely removed by pulling it through the catch.

NOTE: Use a wipe dampened with alcohol to clean all connectors and blow them dry with air before making connections.

Step 2. Insert one connector into the adapter mounted in the patch panel and lock it into place with the bayonet fitting. (This is accomplished by aligning the key on the connector barrel with the keyway on the adapter, inserting the connector in the adapter, engaging the bayonet coupling mechanism, and rotating the connector clockwise until it stops.)

Step 3. Insert the mating connector into the opposite side of adapter and lock it into place.

Step 4. Repeat steps 2 and 3 above until all of the connectors are installed. Push the panel back into the box and tighten the screws.

Step 5. Close and secure the enclosure cover using a wrench.

METHOD 2C2
CONVENTIONAL CABLE, LOOSE TUBE FURCATION CABLE, AND 5-MILLIMETER BOF CABLE FORMING, ROUTING, AND SHAPING WITHIN M24728/9 AND /10 FOICBs

1. SCOPE

1.1 Scope. The M24728/9 (see figure 2C2-1) and M24728/10 (see figure 2C2-2) FOICBs are dual-purpose boxes with a section intended for tube routing and a section intended for fiber optic interconnections (e.g., fiber optic cable patching or splicing). This method describes a procedure for the forming, routing, and shaping of the OFCCs, loose tube furcation cables, and 5-millimeter BOF tubing within these FOICBs.

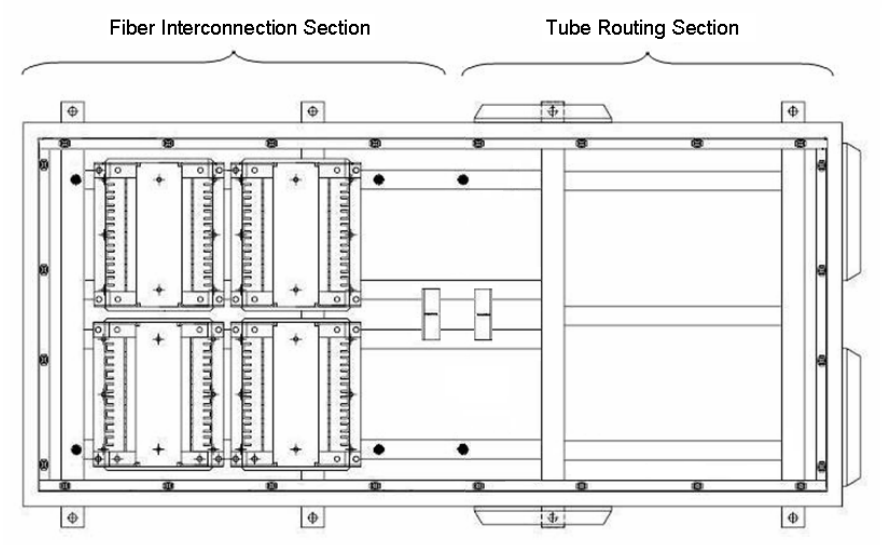

FIGURE 2C2-1. M24728/9 fiber optic interconnection box (FOICB).

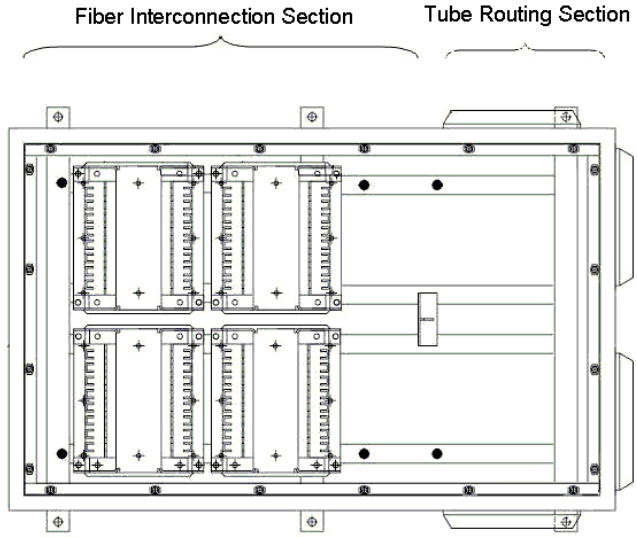

FIGURE 2C2-2. M24728/10 fiber optic interconnection box (FOICB).

2. DOCUMENTS APPLICABLE TO METHOD 2C2

2.1 General. The documents listed in this section are specified in Method 2C2 of this standard. This section does not include documents cited in other sections of this standard or recommended for additional information or as examples. While every effort has been made to ensure the completeness of this list, document users are cautioned that they must meet all specified requirements of documents cited in Method 2C2 of this standard, whether or not they are listed.

2.2 Government documents.

2.2.1 Specifications, standards, and handbooks. The following specifications, standards, and handbooks form a part of this document to the extent specified herein. Unless otherwise specified, the issues of these documents are those cited in the solicitation or contract.

DEPARTMENT OF DEFENSE SPECIFICATIONS

MIL-DTL-24728/8 - Interconnecting Box, Fiber Optic, Fusion Splice Tray and Holder Module

MIL-DTL-24728/9 - Interconnection Box, Cable Routing, Fiber Optic, Spraytight, 712 × 1372 mm

MIL-DTL-24728/10 - Interconnection Box, Cable Routing, Fiber Optic, Spraytight, 712 × 1017 mm

DEPARTMENT OF DEFENSE STANDARDS

MIL-STD-2042-1 - Fiber Optic Cable Topology Installation Standard Methods for Surface Ships and Submarines (Cables) (Part 1 of 7 Parts)

(Copies of these documents are available online at http://quicksearch.dla.mil/.)

2.3 Non-Government publications. The following documents form a part of this document to the extent specified herein. Unless otherwise specified, the issues of these documents are those cited in the solicitation or contract.

SAE INTERNATIONAL

SAE-AMS-DTL-23053/5 - Insulation Sleeving, Electrical, Heat Shrinkable, Polyolefin, Flexible, Crosslinked

SAE-AS23190 - Wiring, Positioning, and Support Accessories

(Copies of these documents are available online at www.sae.org.)

2.4 Order of precedence. Unless otherwise noted herein or in the contract, in the event of a conflict between the text of this document and the references cited herein, the text of this document takes precedence. Nothing in this document, however, supersedes applicable laws and regulations unless a specific exemption has been obtained.

3. REQUIRED EQUIPMENT AND MATERIALS

3.1 Equipment and procedures. The equipment and materials in table 2C2-I shall be used to perform this procedure. More detail on approved sources for items with reference numbers can be found on the Dahlgren shipboard fiber optics website (see 6.6). The list on which items appear is indicated by the two-letter prefix as follows:

a. TL = Recommended Tool List

b. TS = Recommended Test Equipment List

TABLE 2C2-I. Equipment and materials.

Reference #	Description	Quantity
TL-0071	Safety glasses	1
TL-0069	Ruler	1
	Self-cinching straps (SAE-AS23190)	As required
	Hook-and-loop-type cable ties	As required
	Synthetic tubing	As required
	Heat shrink tubing (SAE-AMS-DTL-23053/5)	As required
TL-0101	Heat gun (Raychem 500B, or equal [see 4.6])	1
TL-0002 or TL-0044	Isopropyl alcohol, 99% pure anhydrous or alcohol pad, sealed	As required
TL-0016	Wipes (if not using pre-wetted alcohol pads)	As required
TL-0013	Canned air	As required

NOTES:

1. Products to be considered for addition to the recommended tool or test equipment shall obtain approval as specified (see 6.5).
2. CAUTION: Throughout the fabrication process, cleanliness is critical to obtaining a high quality optical connection. Make sure that your hands and the work area are as clean as possible to minimize the ingress of dirt into the connections.

4. PROCEDURES

4.1 Safety summary. The following safety procedures shall be observed:

a. Wear safety glasses at all times when handling bare fibers.

b. Do not touch the ends of bare fiber. Wash hands thoroughly after handling bare fibers.

c. When visually inspecting an optical fiber, do not stare into the end of a fiber connected to a laser source or LED.

d. Do not look into the end of a BOF tube. Always wear approved safety glasses when handling BOF tubes that may be connected to a pressure source.

4.2 Procedure. The following steps shall be performed:

Step 1. Verify that the procedures of Method 2B3 or Method 2H3 have been completed.

NOTE: Keep BOF tube couplers and the ends of BOF tubes clean and free of contaminants.

NOTE: BOF tube couplers may be cleaned using distilled water and blown dry with air. Do not clean or soak BOF tube couplers in alcohol or other cleaning agents. BOF tube couplers can be permanently damaged by exposure to alcohol and cleaning agents.

NOTE: Previously used BOF tube couplers may not adequately seal to BOF tubes. When installing BOF cabling, always use new BOF tube couplers.

CAUTION: Do not disengage mated BOF tube couplers. Disengaging utilized BOF tube couplers may damage/break the optical fibers contained within the BOF tubes.

Step 2. Open the FOICB cover and visually examine the OFCCs, loose tube furcation units, and BOF tubes for cuts or kinks before continuing.

CAUTION: Do not exceed a bend diameter of eight times the OFCC or loose tube furcation unit cable OD for short-term bends and 16 times the OFCC or loose tube furcation cable OD for long-term bends. Do not exceed a bend diameter of 13 centimeters (5 inches) for 8-millimeter BOF tubes. 8-millimeter BOF tubes may collapse at diameters less than 13 centimeters (5 inches). Do not exceed a bend diameter of 10 centimeters (4 inches) for 5-millimeter BOF tubes. 5-millimeter BOF tubes may collapse at diameters less than 10 centimeters (4 inches).

NOTE: OFCCs shall be routed from their cable entry point, within the tube routing section of the FOICB, straight to the fiber interconnection section of the FOICB.

NOTE: 8-millimeter BOF tubes that are to transition to 5-millimeter BOF tubes shall be transitioned using Method 2L1. The transitioned 5-millimeter BOF tubes should be routed from the tube routing section of the FOICB straight to the fiber interconnection section of the FOICB.

NOTE: Loose tube cables from furcation units connected to 8-millimeter BOF tubes shall be routed from the tube routing section of the FOICB straight to the fiber interconnection section of the FOICB.

Step 3. Observe the connection configuration chart or other approved drawing and form the fibers (i.e., OFCCs, loose tube cables from furcation units) into groups based on their final destination. Form 5-millimeter BOF tubes into groups based on their final destination. Groups may then be formed into bundles and shaped using hook-and-loop-type cable ties.

NOTE: Shaping may use self-cinching straps in accordance with the figure for lacing and wrapping wire bundles in electrical and electronic equipment in MIL-STD-2003-1. Do not tighten down straps with a hand tool.

Step 4. Route the OFCC and loose tube furcation cable bundles and 5-millimeter BOF tube bundles around the box, securing them to the lower box mounting brackets using the hook-and-loop-type cable ties. Observe the following during routing:

a. Route all OFCCs, loose tube furcation cables, and 5-millimeter BOF tubes one-half of the way around the FOICB and then to the termination point.

b. Use an indirect route when a direct route to a termination point would exceed the OFCC or loose tube furcation cable long-term bend diameter of sixteen times the OFCC or furcation cable OD.

c. Use an indirect route when a direct route to a termination point would exceed a bend diameter of 10 centimeters (4 inches) for a 5-millimeter BOF tube.

d. Where possible, secure the 5-millimeter BOF tubes to the upper cable mounting brackets of the FOICB. Secure OFCCs and loose tube furcation cables to the lower cable mounting brackets of the FOICB.

e. Protect OFCC bundles/groups, loose tube furcation cable bundles/groups, and 5-millimeter BOF tube bundles/groups from possible damage by sharp edges by the use of supporting brackets or the use of synthetic tubing at the point of the sharp edge.

Step 5. For OFCCs or loose tube furcation cables, break out each separate OFCC or loose tube furcation cable from the group or bundle and, if not already done, slide the heat shrink tubing with the fiber identification over the connector or splice onto the OFCC or loose tube furcation cable jacket.

NOTE: Do not install heat shrink tubing on 900-micron fibers. In those cases where 900-micron fiber is present going into a splice, the shrink tubing shall be installed in a region where there is an OFCC.

Step 6. For 5-millimeter BOF tubes, break out each separate 5-millimeter BOF tube from the group or bundle and, if not already done, slide the heat shrink tubing with the tube identification onto the 5-millimeter BOF tube.

Step 7. Holding the heat gun approximately 100 millimeters (4 inches) away from the OFCC or loose tube furcation cable and the heat shrink tubing, shrink the heat shrink tubing.

CAUTION: Do not overheat the OFCC or loose tube furcation cable. Prolonged exposure of the OFCC jacket or loose tube furcation cable jacket to temperatures above 160 °C (320 °F) may damage them. If the OFCC or furcation cable jacket shows any signs of bubbling or swelling, discontinue the heating of the heat shrink tubing and allow the OFCC jacket or loose tube furcation cable jacket to cool before reheating.

CAUTION: Do not heat tube identification labels on 5-millimeter BOF tubes.

Step 8. Form the unterminated OFCC and loose tube furcation cable bundles into a loop around the complete interior of the fiber interconnection section of the FOICB, being careful not to kink or otherwise damage the OFCCs or loose tube furcation cables, and end seal the bundles in accordance with MIL-STD-2042-1, Method 1A1 or end seal individual OFCC or loose tube furcation cables in accordance with MIL-STD-2042-1, Method 1E1. Tie off the unterminated bundles such that they will not obstruct access to other components.

NOTE: Do not group or bundle the unterminated OFCCs or loose tube furcation cables with the terminated OFCCs and loose tube furcation cables. Unterminated OFCCs and loose tube furcation cables shall be independently grouped, bundled, and strapped to the lower cable mounting brackets of the FOICB from the terminated cables.

Step 9. Route OFCCs, loose tube furcation cables, and 5-millimeter BOF tubing destined for termination to the destination location and prepare according to the following applicable scenarios:

a. Install OFCCs and loose tube furcation cables in patch panels in accordance with Method 2C1, 4.2.2.

b. Install OFCCs and loose tube furcation cables in fusion splice trays in accordance with Method 2K1 or Method 2K2.

c. Install 5-millimeter BOF tube in M24728/8-51 fusion splice trays in accordance with Method 2M1.

METHOD 2D1
SPLICE ASSEMBLY AND ALIGNMENT

This method is obsolete for new design. The method details can be found in MIL-STD-2042B.

METHOD 2E1
BOF TUBE FURCATION UNIT FABRICATION

1. SCOPE

1.1 Scope. This method describes the procedure for fabricating tube furcation units that will separate either individual blown fibers or BOF bundles, within a tube, into individual single fiber cables, so that they may be terminated using the same methods and materials as traditional (OFCC-type) cables. This procedure may be used to fabricate tube furcation units for four to twelve optical fibers.

NOTE: Furcation units for 2 to 18 fibers in accordance with A-A-59729 may be used.

2. DOCUMENTS APPLICABLE TO METHOD 2E1

2.1 General. The documents listed in this section are specified in Method 2E1 of this standard. This section does not include documents cited in other sections of this standard or recommended for additional information or as examples. While every effort has been made to ensure the completeness of this list, document users are cautioned that they must meet all specified requirements of documents cited in Method 2E1 of this standard, whether or not they are listed.

2.2 Government documents.

2.2.1 Specifications, standards, and handbooks. The following specifications, standards, and handbooks form a part of this document to the extent specified herein. Unless otherwise specified, the issues of these documents are those cited in the solicitation or contract.

COMMERCIAL ITEM DESCRIPTIONS

A-A-272 - Caulking Compounds

A-A-59729 - Furcation Units, Tube, Blown Optical Fiber

A-A-59731 - Tube Fittings, Blown Optical Fiber

(Copies of these documents are available online at http://quicksearch.dla.mil/.)

2.3 Order of precedence. Unless otherwise noted herein or in the contract, in the event of a conflict between the text of this document and the references cited herein, the text of this document takes precedence. Nothing in this document, however, supersedes applicable laws and regulations unless a specific exemption has been obtained.

3. REQUIRED EQUIPMENT AND MATERIALS

3.1 Equipment and materials. The equipment and materials in table 2E1-I shall be used to perform this procedure. More detail on approved sources for items with reference numbers can be found on the Dahlgren shipboard fiber optics website (see 6.6). The list on which items appear is indicated by the two-letter prefix as follows:

a. TL = Recommended Tool List

b. TS = Recommended Test Equipment List

TABLE 2E1-I. Equipment and materials.

Reference #	Description	Quantity
TL-0071	Safety glasses	1
TL-0069	Ruler	1
	High-density polyethylene tubing with 9.5-mm (0.375-inch) inner diameter (ID) (for 4- and 6-fiber tube furcation unit)	As required
	High-density polyethylene tubing with 12.7-mm (0.5-inch) ID (for 8- and 12-fiber tube furcation units)	As required
	BOF high-density polyethylene tubing (8.0-mm OD)	As required
	Heat shrink sleeve (Raychem SST-FR series, or equal [see 4.6])	As required
TL-0101	Heat gun	1
	Loose tube furcation cable (A-A-59729)	As required
	Color coding materials	As required
	Two-part epoxy (Devcon P/N 14250, or equal [see 4.6])	1
TL-0045	Aramid yarn shears	1
TL-0078	OFCC strip tool	1
	Tube cutter	1
	Scissors	1
	Silicone caulking compound in standard caulking tube (A-A-272)	As required
	Caulking gun	1
	Rubber gloves	1 pair
TL-0002 or TL-0044	Isopropyl alcohol, 99% pure anhydrous or alcohol pad, sealed	As required
TL-0016	Wipes (if not using pre-wetted alcohol pads)	As required
	Cotton swab	As required
	Razor blade	1
	Fiber, 500-micrometer OD	As required
	Tube coupler (AA59731-U-8)	1
	Pressure source with 8-mm (0.315-inch) OD tube outlet	1
NOTE: Products to be considered for addition to the recommended tool or test equipment shall obtain approval as specified (see 6.5).		

4. PROCEDURES

4.1 Safety summary. The following safety procedures shall be observed:

a. Observe warnings and cautions on equipment and materials.

b. Wear safety glasses at all times when handling bare fibers or dispensing adhesive.

c. Avoid skin contact with adhesives.

d. Do not touch the ends of the fiber, as they may be razor sharp. Wash your hands after handling bare fiber.

4.2 Procedure.

4.2.1 Furcation unit fabrication. The following steps shall be performed:

Step 1. Using the aramid yarn shears, cut the required number of loose tube furcation cables to the required length.

NOTE: The preferred convention is that slate colored loose tube furcation cable is used for furcation units for multimode optical fiber. The preferred convention is that yellow colored loose tube furcation cable is used for furcation units for single mode optical fiber. However, alternative color coding with appropriate labeling indicating fiber type may be used.

NOTE: The exact length of the loose tube furcation cable depends upon the equipment and the furcation cable routing. This length may be determined by measuring the distance required to route the loose tube furcation cables from the end of the BOF tube to the furthermost connection point in the equipment plus approximately 130 millimeters (5 inches). Alternatively, standard length furcation units (e.g., 1.0 meter, 1.5 meter, 2.0 meter) may be fabricated and cut to the appropriate length during equipment installation.

Step 2. Using the tube cutter, cut the following items to the identified lengths:

a. 38-millimeter (1.5-inch) length of high-density polyethylene tube.

b. 76-millimeter (3-inch) length of BOF tube.

c. 76-millimeter (3-inch) length of heat shrink tubing.

NOTE: Clean the end of the high-density polyethylene tube and the BOF tube with a wipe dampened with alcohol and blow dry as necessary.

Step 3. Insert the loose tube furcation cables into the high-density polyethylene tube and slide the tube approximately 30 centimeters (12 inches) down the furcation cables.

Step 4. Using the OFCC strip tool, trim back the loose tube furcation cable jackets approximately 100 millimeters (4 inches), exposing the aramid yarn and buffer tubes. Arrange all of the loose tube furcation cables together and evenly align them with each other (see figure 2E1-1).

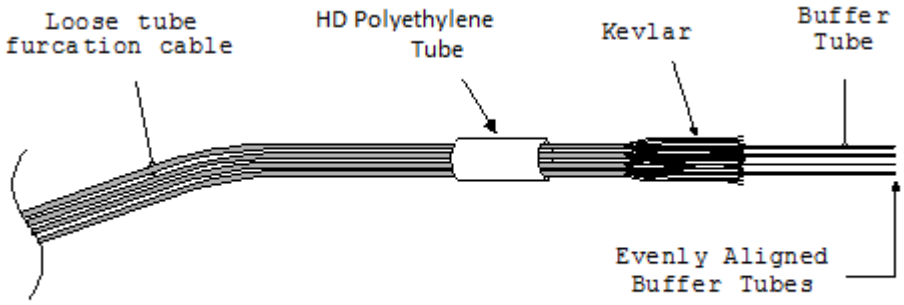

FIGURE 2E1-1. Aligning the loose tube furcation cables.

Step 5. Slide the high-density polyethylene tube up the loose tube furcation cables until it is approximately 25 millimeters (1.0 inch) from the end of the furcation cable jacket. Ensure that the trimmed portions of the loose tube furcation cables are still aligned with each other.

Step 6. Thoroughly mix the two parts of the epoxy together and apply the epoxy to approximately 19 millimeters (0.7 inch) of the end of the loose tube furcation cable jackets.

NOTE: Only a light coating of epoxy is required. Make sure that epoxy is applied to all furcation cable jackets.

Step 7. Carefully move the high-density polyethylene tube over the epoxy covered loose tube furcation cables until the ends of the furcation cable jackets are centered approximately between the ends of the high-density polyethylene tube. Fold back the aramid yarn strands over the high-density polyethylene tube (see figure 2E1-2).

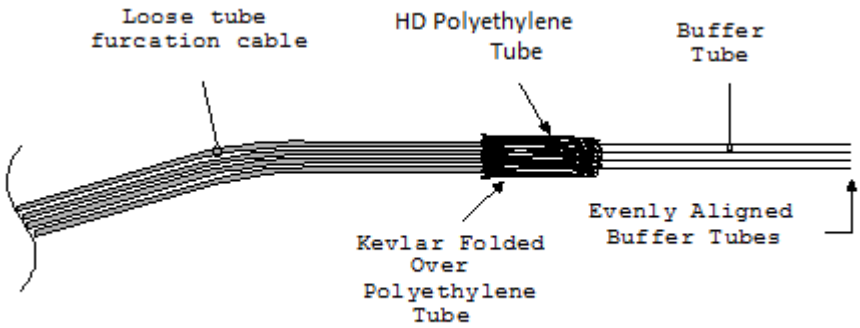

FIGURE 2E1-2. Folding back the aramid yarn.

Step 8. Still holding the loose tube furcation cable and high-density polyethylene tube assembly, insert the exposed furcation cable buffer tubes into the BOF tube. Slide the BOF tube to the edge of the high-density polyethylene tube.

Step 9. Apply epoxy to approximately 19 millimeters (0.75 inch) of the BOF tube end closest to the high-density polyethylene tube. Insert the BOF tube into the high-density polyethylene tube until the BOF tube butts against the jackets of the loose tube furcation cables. Ensure that approximately 12.7 millimeters (0.5 inch) of the loose tube furcation cable buffer tubes are protruding from the end of the BOF tube (see figure 2E1-3).

NOTE: Only a light coating of epoxy is required.

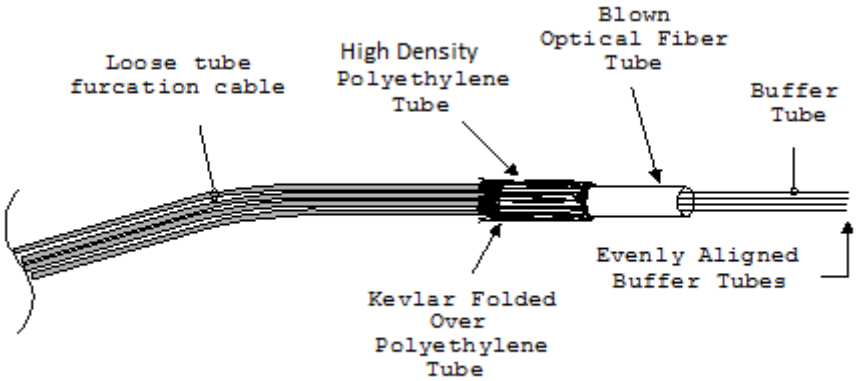

FIGURE 2E1-3. Loose tube furcation cables joined to the BOF tube.

Step 10. Allow the assembly to set until the epoxy hardens.

Step 11. With the aramid yarn shears, trim the aramid yarn strands even with the rear end of the high-density polyethylene tube. Thoroughly mix the two parts of the epoxy together and apply epoxy to the high-density polyethylene tube. Evenly distribute the aramid yarn strands around the high-density polyethylene tube and fold them flat against the tube sides.

NOTE: Only a light coating of epoxy is required.

Step 12. While the epoxy is still wet, slide the heat shrink tube over the BOF tube and the high-density polyethylene tube. Center the heat shrink tube over the high-density polyethylene tube. Ensure that the heat shrink tube covers at least 12.7 millimeters (0.5 inch) of the loose tube furcation cables and BOF tube.

Step 13. Holding the heat gun approximately 100 millimeters (4 inches) away, heat evenly from the center to the ends around the entire sleeve. Heat until the tube has shrunk to a snug fit around the complete assembly (see figure 2E1-4).

CAUTION: Do not overheat the loose tube furcation cables. Prolonged exposure of the loose tube furcation cable jackets to temperatures above 160 °C (320 °F) may damage the furcation cable jackets. Discontinue heating of the sleeve and allow the loose tube furcation cable jackets to cool before reheating if the furcation cable jackets show any signs of bubbling or swelling.

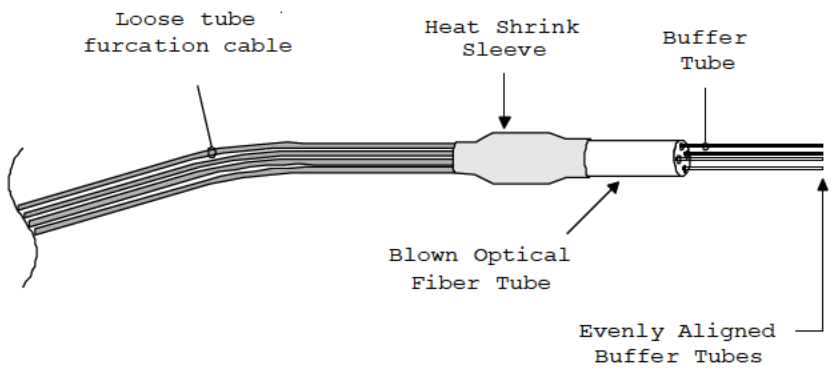

FIGURE 2E1-4. Completed assembly.

Step 14. Place the caulking compound tube nozzle into the end of the BOF tube. Inject the caulking compound so that it completely fills a 12.7-millimeter (0.5-inch) length of the tube (as a minimum). Carefully work the exposed loose tube furcation cable buffer tubes around within the caulking compound so that there are no voids. Arrange the buffer tubes so that they are approximately centered in the BOF tube. Clean any excess caulking compound from the tube with a wipe.

Step 15. Allow the caulking compound to cure for 72 hours.

Step 16. Using the razor blade, carefully cut off the exposed ends of the loose tube furcation cable buffer tubes even with the end of the BOF tube.

Step 17. Verify the integrity of each loose tube furcation cable buffer tube in the completed furcation unit. Insert the 500-micron fiber through each loose tube furcation cable buffer tube until it exits out the other end of the tube.

Step 18. Connect the furcation unit to a 234-kilopascal (kPa) (34-pounds per square inch [psi]) pressure source using a tube coupler. Maintain the connection for a minimum of 30 seconds. Verify that there is no leakage of air from the furcation unit body.

NOTE: Leakage may be checked by immersing the furcation unit body in water and visually inspecting for air bubbles. The ends of the loose tube furcation cables should not be immersed.

NOTE: A clean tube coupler reduces the chance of leakage. Inspect the inside of the tube coupler for shavings from previous usage. A cotton swab may be used to remove shavings from the tube coupler.

Step 19. The furcation unit is now ready to be used in either Method 2F2, 4.2.2 or Method 2F3, 4.2.2.

METHOD 2F1
BOF TUBE FURCATION UNIT INSTALLATION

This method has been superseded by Method 2F2 or Method 2F3.

METHOD 2F2
BOF TUBE FURCATION UNIT INSTALLATION WITH POLYACRYLAMIDE USING CLEAR TUBING

1. SCOPE

1.1 Scope. This method describes the procedure for installing the individual blown fibers, or fibers within BOF bundles, into a furcation unit using only clear BOF tubing. While this is a valid and approved furcation approach, the tee coupler approach used in Method 2F3 is the preferred and recommended approach.

2. DOCUMENTS APPLICABLE TO METHOD 2F2

2.1 General. The documents listed in this section are specified in Method 2F2 of this standard. This section does not include documents cited in other sections of this standard or recommended for additional information or as examples. While every effort has been made to ensure the completeness of this list, document users are cautioned that they must meet all specified requirements of documents cited in Method 2F2 of this standard, whether or not they are listed.

2.2 Government documents.

2.2.1 Specifications, standards, and handbooks. The following specifications, standards, and handbooks form a part of this document to the extent specified herein. Unless otherwise specified, the issues of these documents are those cited in the solicitation or contract.

COMMERCIAL ITEM DESCRIPTIONS

A-A-59729 - Furcation Units, Tube, Blown Optical Fiber

A-A-59730 - Plugs, Tapered Tube, Blown Optical Fiber

A-A-59731 - Tube Fittings, Blown Optical Fiber

DEPARTMENT OF DEFENSE STANDARDS

MIL-STD-2042-1 - Fiber Optic Cable Topology Installation Standard Methods for Surface Ships and Submarines (Cables) (Part 1 of 7 Parts)

MIL-STD-2042-4 - Fiber Optic Cable Topology Installation, Standard Methods for Surface Ships and Submarines (Cableways) (Part 4 of 7 Parts)

(Copies of these documents are available online at http://quicksearch.dla.mil/.)

2.3 Order of precedence. Unless otherwise noted herein or in the contract, in the event of a conflict between the text of this document and the references cited herein, the text of this document takes precedence. Nothing in this document, however, supersedes applicable laws and regulations unless a specific exemption has been obtained.

3. REQUIRED EQUIPMENT AND MATERIALS

3.1 Equipment and materials. The equipment and materials in table 2F2-I shall be used to perform this procedure. More detail on approved sources for items with reference numbers can be found on the Dahlgren shipboard fiber optics website (see 6.6). The list on which items appear is indicated by the two-letter prefix as follows:

a. TL = Recommended Tool List

b. TS = Recommended Test Equipment List

TABLE 2F2-I. Equipment and materials.

Reference #	Description	Quantity
	Furcation assembly (A-A-59729 or as prepared by Method 2E1)	1 (provided)
TL-0071	Safety glasses	1
	Tapered tube plug (6-fiber bundle, 2 to 6 individual fibers) (AA59730-TTP-2)	As required
	Tapered tube plug (12- or 18-fiber bundle, 8 to 12 individual fibers) (A-A-59730-TTP-3)	As required
	Adhesive and sealant tape (Raychem SFTS-1, or equal [see 4.6])	As required
TL-0069	Ruler	1
	Utility knife	1
TL-0130	Tube cutter	1
TL-0081	Bundle jacket stripper (18 gauge for 6-fiber bundles)	1
TL-0113	Bundle jacket stripper (12 gauge for 18-fiber bundles)	1
TL-0114	Clear jacket stripper (20 gauge for 6-fiber bundles)	1
	Scissors	1
	Fiber, BOF single fibers or fibers from a BOF bundle	As required
	Straight tube coupler (A-A-59731-U-8)	As required
	Tee tube coupler (A-A-59731-T-8 or A-A-59731-TS-8)	As required
	2-mm (0.079-inch) filtered polyacrylamide water-blocking crystals	0.5 grams (provided)
	Clear high-density polyethlene BOF tubing (8.0-mm OD)	1- to 3-inch piece, any length may be substituted
TL-0002 or TL-0044	Isopropyl alcohol, 99% pure anhydrous or alcohol pad, sealed	As required
TL-0016	Wipes (if not using pre-wetted alcohol pads)	As required
	Colored tubing or tape	As required
	Distilled water	As required
TL-0013	Canned air	As required
NOTE: Products to be considered for addition to the recommended tool or test equipment shall obtain approval as specified (see 6.5).		

4. PROCEDURES

4.1 Safety summary. The following safety procedures shall be observed:

a. Observe warnings and cautions on equipment and materials.

b. Wear safety glasses at all times when handling bare fibers or dispensing adhesive.

c. Do not touch the ends of the fiber as they may be razor sharp. Wash your hands after handling bare fiber.

d. Do not stare into the end of a fiber until verifying that the fiber is not connected to a laser light source or LED.

4.2 Procedure.

NOTE: Previously used BOF tube couplers may not adequately seal to BOF tubes. When installing BOF cabling, it is recommended to clean previously used couplers or use new tube couplers. A cotton swab may be used to remove shavings from the inside of previously used tube couplers.

NOTE: BOF tube couplers may be cleaned using distilled water and blown dry with air. BOF tube couplers shall not be cleaned or soaked in alcohol or other cleaning agents. BOF tube couplers can be permanently damaged by exposure to alcohol and cleaning agents.

4.2.1 Tube and fiber preparation. The following steps shall be performed:

NOTE: Before mating BOF tubes to BOF tube couplers, clean the end of each BOF tube with a wipe dampened with alcohol and blow dry as necessary.

NOTE: Refer to the connection chart or other approved drawing to determine where straight or tee couplers are to be used.

CAUTION: Do not exceed a bend diameter of 13 centimeters (5 inches) for 8-millimeter BOF tubes. 8-millimeter BOF tubes may collapse at diameters less than 13 centimeters (5 inches).

Step 1. Insert the individual fibers or bundled fiber into the tube coupler. Slide the tube coupler over the fibers/bundle to the BOF tube. Slide the tube coupler onto the BOF tube and seat it firmly (see figure 2F2-1).

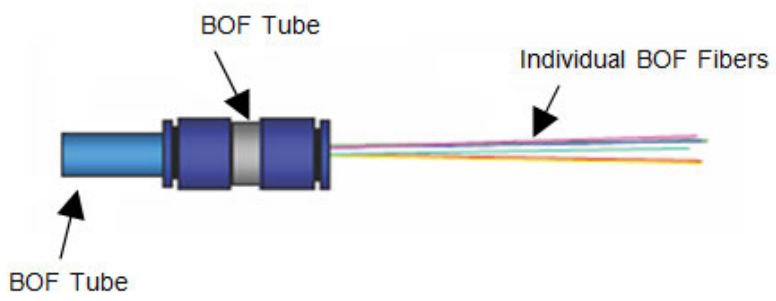

FIGURE 2F2-1. Placement of tube coupler.

Step 2. Using the scissors, trim back the individual fibers or fiber bundle that exits the tube coupler to approximately 84 centimeters (33 inches) longer than the loose tube furcation cable length. If the 18-fiber bundle approach described in step 4.a below is utilized, the fiber bundle should be trimmed to approximately 115 centimeters (45 inches) longer than the loose tube furcation cable length. For individual fiber installations, skip to step 5.

NOTE: The total required length of the blown fiber or fiber bundle and the loose tube furcation cables extending from the furcation assembly depends upon the equipment and the fiber routing. This length may be determined by measuring the distance required to route the fiber from the end of the BOF tube to the furthermost connection point in the equipment plus approximately 130 millimeters (5 inches). The 84 centimeters (33 inches) (115 centimeters [45 inches] for 18-fiber bundle) mentioned above is in addition to this length.

Step 3. Place the tapered tube plug in the clear tubing and, if necessary, trim the flange to the diameter of the tube using scissors or other appropriate cutting tool. Remove tapered tube plug from clear tubing.

Step 4. For tubes containing BOF bundles only:

NOTE: For 18-fiber bundles, fibers of the same color are contained in each 6-fiber subunit. The sixth fiber color in each of the three 6-fiber subunits identifies the particular subunit. During the installation of the furcation unit, it is important to know the 6-fiber subunit that each fiber comes from. One method to uniquely mark the fibers of each 6-fiber subunit is to make the fibers of each subunit a slightly different length. See table 2F2-II for fiber color coding.

a. Optional step for 18-fiber bundles: Using the scissors, cut off approximately 100 millimeters (4 inches) of the fibers from one 6-fiber subunit. Then cut off approximately 200 millimeters (8 inches) of the fibers in a different 6-fiber subunit.

b. Mark the bundle jacket approximately 25 millimeters (1.0 inch) from the tube coupler.

NOTE: Do not pull slack fiber bundle out of the BOF tube while breaking out the bundle fibers. If slack fiber bundle is accidentally pulled out of the BOF tube, re-establish the bundle to its original position (using the 25-millimeter [1-inch] mark on the bundle jacket) and continue the procedure.

c. Using the bundle jacket stripper, remove the exposed bundle jacket in approximately 160-millimeters (6-inch) lengths back to the mark (see figure 2F2-2).

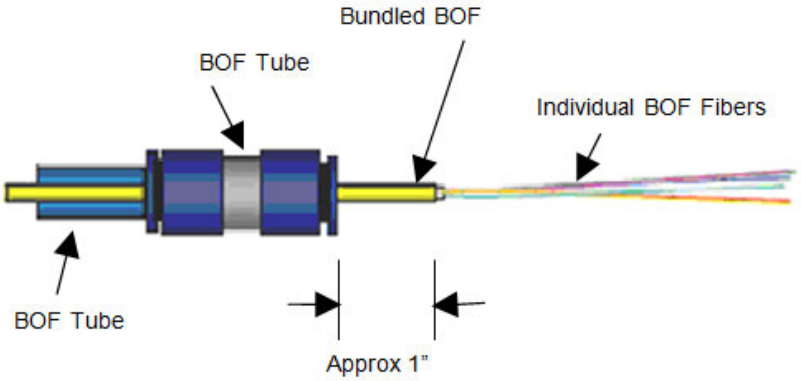

FIGURE 2F2-2. Preparation of bundled fiber.

NOTE: Once a short length of the bundle jacket has been removed, the remaining length can be torn off of the bundle by hand.

d. Using the clear jacket stripper, remove approximately 80 millimeters (3.0 inches) of the clear inner jacket from the end of each 6-fiber subunit.

NOTE: If the wire stripper does not bite into the clear inner jacket, position the wire stripper at a 30- to 40-degree angle to increase its bite.

e. Find the ripcord from among the six fibers. Ensure that it is not crossed with any of the fibers. While holding the group of fibers in one hand, pull the ripcord along the bundle with the other hand. Pull the ripcord until it reaches the mark on the bundle jacket.

NOTE: The ripcord and fibers spiral along the bundle length. Take care to follow the spiral when pulling the ripcord.

f. Starting at the end of the fiber bundle subunit, carefully pull the group of fibers from the clear inner jacket.

g. Using the scissors, carefully cut away the ripcord and the clear inner jacket.

h. Check both ends of the clear tubing to verify they are perpendicular to the tube length. Clean the ends of the BOF tube with a wipe dampened with alcohol and blow dry as necessary. Skip to step 6.

Step 5. Insert the individual fibers into the short piece of clear BOF tube provided. Slide the clear BOF tube over the fibers to within approximately 50 millimeters (2 inches) of the tube coupler (see figure 2F2-3). Skip to step 7.

NOTE: Any length of clear tubing can be used to adjust the location of push-fit connectors within equipment, boxes or cable harnesses. It is necessary to bend the tubing up without kinking the tubing such that polyacrylamide crystals can be poured down into the clear tube.

NOTE: The installer is cautioned to ensure that both ends of the tube are cut perpendicularly to the tube length. Clean the ends of the BOF tube with a wipe dampened with alcohol and blow dry as necessary.

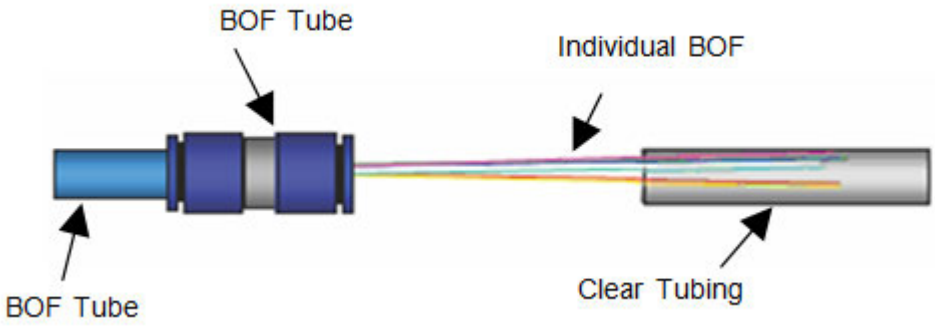

FIGURE 2F2-3. Installation of clear BOF tubing.

Step 6. For BOF bundles only:

a. Place the provided tapered tube plug around the exposed bundle jacket approximately 19 millimeters (0.75 inch) from the BOF tube coupler (see figure 2F2-4).

NOTE: The tapered tube plug should be oriented with the tapered tube end of the plug towards the short piece of clear BOF tube.

b. Push the short piece of BOF tube over the tapered tube plug until the plug is fully inserted into the tube. Skip to step 8.

NOTE: Do not pull slack fiber bundle out of the BOF tube while assembling the plug to the bundle jacket and the clear BOF tube. If slack fiber bundle is accidentally pulled out of the BOF tube, re-establish the bundle to its original position and continue the procedure.

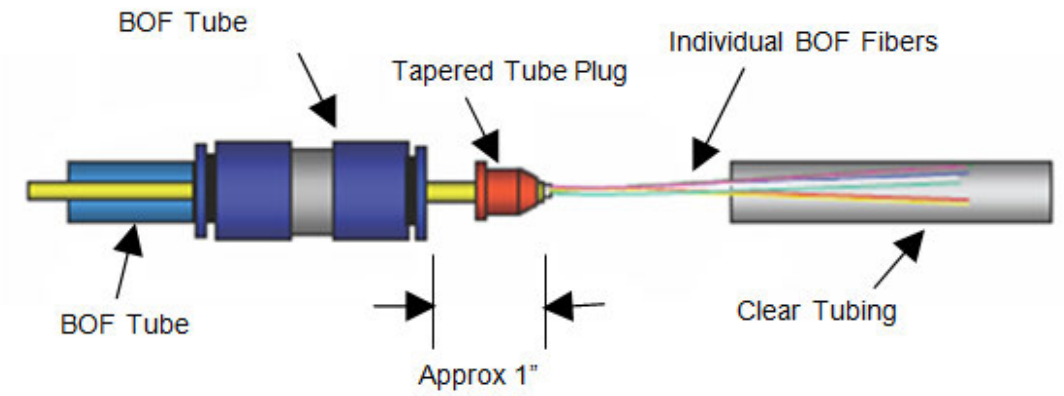

FIGURE 2F2-4. Installation of tapered tube plug for bundled fiber.

Step 7. For tubes containing individual blown fibers only:

a. Work a small amount of sealant tape around the optical fibers approximately 12 millimeters (0.5 inch) from the end of the BOF tube.

b. Place the tapered tube plug around the optical fibers and sealant tape (see figure 2F2-5).

NOTE: The tapered tube plug should be oriented with the tapered end of the plug towards the short piece of clear BOF tube.

NOTE: The installer is cautioned to ensure that both ends of the tube are cut perpendicularly to the tube length. Clean the ends of the BOF tube with a wipe dampened with alcohol and blow dry as necessary.

c. Push the short piece of clear BOF tube over the tapered tube plug until the plug is fully inserted into the tube.

NOTE: Do not pull slack fiber out of the BOF tube while assembling the plug to the individual blown fibers and clear BOF tube. If the slack fiber is accidentally pulled out of the BOF tube, re-establish the fibers to their original position and continue the procedure.

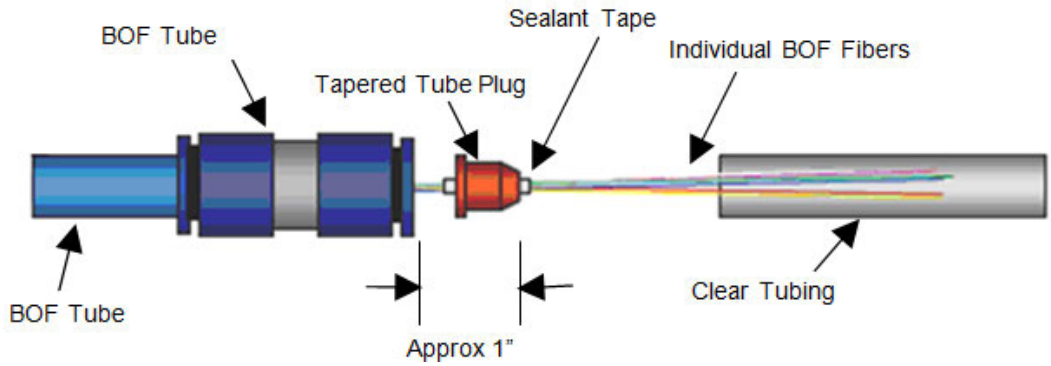

FIGURE 2F2-5. Installation of tapered tube plug for individual fibers.

Step 8. Slide the short piece of BOF tube with the tapered tube plug into the tube coupler and seat firmly (see figure 2F2-6). Apply a light load of approximately 22 Newtons (5 pounds) between the tube and the coupler to ensure the tube is fully engaged onto the coupler.

NOTE: The optical fibers should now be fixed in the tapered tube plug in the BOF tube and should not move in or out during the furcation unit installation or fiber termination process.

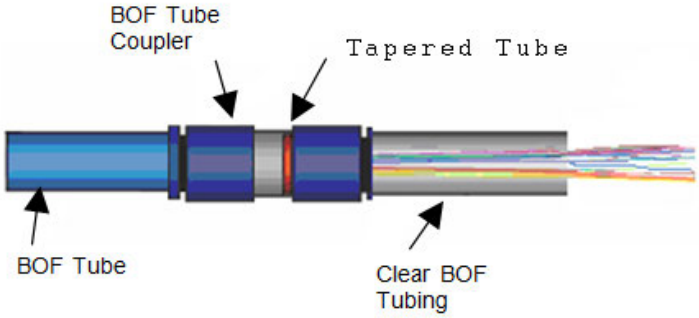

FIGURE 2F2-6. Completed tube and fiber preparation.

4.2.2 Furcation. The following steps shall be performed:

Step 1. Insert each individual fiber into one of the loose tube furcation cables buffer tubes within the furcation unit tube (see figure 2F2-7). Feed each fiber through the furcation unit until all of the fibers are protruding from the ends of the individual loose tube furcation cables.

NOTE: It may be possible to simultaneously feed all of the individual fibers through the buffer tubes. This requires that the feeding of all of the individual fibers into buffer tubes have started. It also requires great care in the feeding process but could expedite the installation process.

Step 2. Clip the tip of the container containing the water swellable polyacrylamide crystals and, tipping the clear BOF tubing up, pour the contents (0.5 gram [0.018 ounce]) into the clear BOF tubing around the fibers.

NOTE: If difficulty is encountered in tipping the tubing up, then a longer clear tube should be used to prevent kinking.

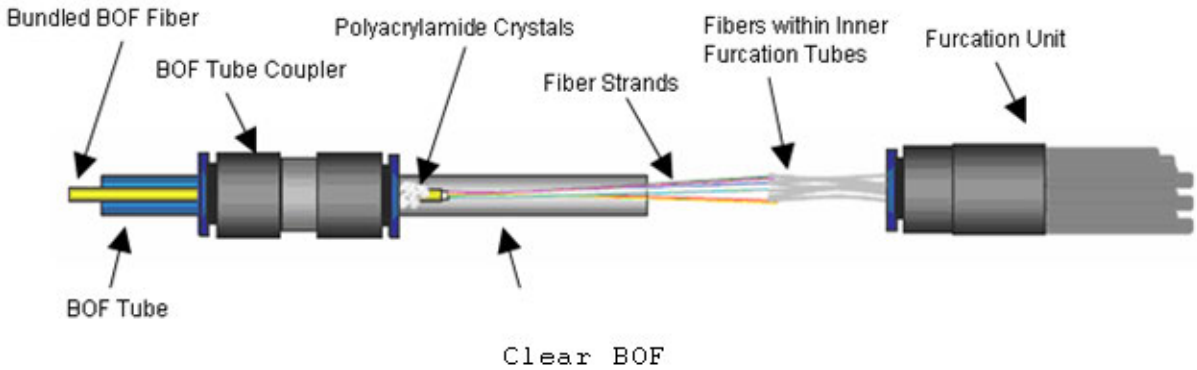

FIGURE 2F2-7. Insertion of fibers within loose tube furcation cables.

Step 3. While continuing to hold the tubing up to keep the crystals at the far end, carefully insert the furcation assembly tube coupler onto the clear BOF tube and seat firmly (see figure 2F2-8). Ensure that no fibers are kinked within the tube as it is inserted into the tube coupler. Apply a light axial load of approximately 22 Newtons (5 pounds) between the BOF tube and the furcation unit to verify coupler engagement.

NOTE: Do not rotate the furcation unit with respect to the BOF tube cable. Rotation of the furcation unit may cause increased optical loss or fiber breakage.

NOTE: Furcation units utilized should have a furcation cable for each of the fibers in the BOF tube. If the number of fibers in the BOF tube exceeds the number of furcation cables by design, the additional fibers shall be cut off after the required fibers are installed through their furcation cables.

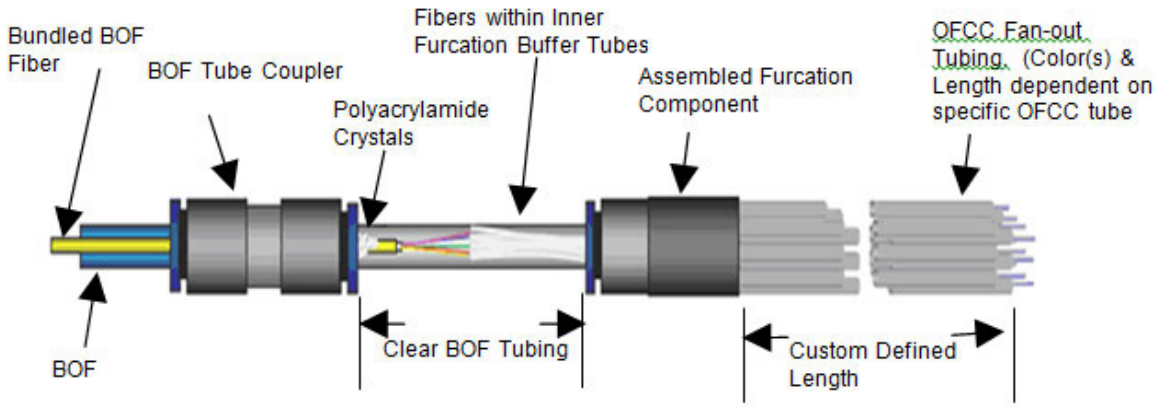

FIGURE 2F2-8. Furcation assembly after attachment of loose tube furcation cables.

Step 4. Utilizing a labeling methodology in accordance with local requirements, label each loose tube furcation cable to identify the fiber within that furcation cable. If marking the color of the fiber within each furcation cable, colored heat shrink tubing or tape may be used. See table 2F2-II for fiber color coding.

Step 5. End seal any furcation cables that will not be terminated in accordance with MIL-STD-2042-1, Method 1E1.

TABLE 2F2-II. Fiber color coding.

Fiber number	General Cable fiber color	Sumitomo Electric fiber color		
		12-fiber bundle	18-fiber bundle	
			Subunit color [1/]	Fiber color
1	Blue	Blue	Red	Blue
2	Orange	Orange		Orange
3	Green	Green		Green
4	Brown	Brown		Brown
5	Slate	Slate		Slate
6	White	White		Red
7	Red	Red	Violet	Blue
8	Black	Black		Orange
9	Yellow	Yellow		Green
10	Violet	Violet		Brown
11	Rose	Rose		Slate
12	Aqua	Aqua		Violet
13	N/A	N/A	Yellow	Blue
14	N/A	N/A		Orange
15	N/A	N/A		Green
16	N/A	N/A		Brown
17	N/A	N/A		Slate
18	N/A	N/A		Yellow

NOTE:

[1/] The subunits of the 18-fiber bundles do not have color coded subunit jackets. The subunit color is determined by the presence of red, violet, or yellow colored fiber within the subunit.

METHOD 2F3
BOF TUBE FURCATION UNIT INSTALLATION WITH POLYACRYLAMIDE USING TEE TUBE COUPLER

1. SCOPE

1.1 Scope. This method describes the procedure for installing the individual blown fibers, or fibers within BOF bundles, into a furcation unit using only clear BOF tubing and a tee tube coupler.

2. DOCUMENTS APPLICABLE TO METHOD 2F3

2.1 General. The documents listed in this section are specified in Method 2F3 of this standard. This section does not include documents cited in other sections of this standard or recommended for additional information or as examples. While every effort has been made to ensure the completeness of this list, document users are cautioned that they must meet all specified requirements of documents cited in Method 2F3 of this standard, whether or not they are listed.

2.2 Government documents.

2.2.1 Specifications, standards, and handbooks. The following specifications, standards, and handbooks form a part of this document to the extent specified herein. Unless otherwise specified, the issues of these documents are those cited in the solicitation or contract.

COMMERCIAL ITEM DESCRIPTIONS

A-A-59729 - Furcation Units, Tube, Blown Optical Fiber

A-A-59730 - Plugs, Tapered Tube, Blown Optical Fiber

A-A-59731 - Tube Fittings, Blown Optical Fiber

DEPARTMENT OF DEFENSE STANDARDS

MIL-STD-2042-1 - Fiber Optic Cable Topology Installation Standard Methods for Surface Ships and Submarines (Cables) (Part 1 Of 7 Parts)

(Copies of these documents are available online at http://quicksearch.dla.mil/.)

2.3 Order of precedence. Unless otherwise noted herein or in the contract, in the event of a conflict between the text of this document and the references cited herein, the text of this document takes precedence. Nothing in this document, however, supersedes applicable laws and regulations unless a specific exemption has been obtained.

3. REQUIRED EQUIPMENT AND MATERIALS

3.1 Equipment and materials. The equipment and materials in table 2F3-I shall be used to perform this procedure. More detail on approved sources for items with reference numbers can be found on the Dahlgren shipboard fiber optics website (see 6.6). The list on which items appear is indicated by the two-letter prefix as follows:

a. TL = Recommended Tool List

b. TS = Recommended Test Equipment List

TABLE 2F3-I. Equipment and materials.

Reference #	Description	Quantity
	Furcation assembly (A-A-59729 or as prepared by Method 2E1)	1 (provided)
TL-0071	Safety glasses	1
	Tapered tube plug (6-fiber bundle, 2 to 6 individual fibers) (A-A-59730-TTP-2)	As required
	Tapered tube plug (12- or 18-fiber bundle, 8 to 12 individual fibers) (A-A-59730-TTP-3)	As required
	Adhesive and sealant tape (Raychem SFTS-1, or equal [see 4.6])	As required
TL-0069	Ruler	1
	Utility knife	1
TL-0130	Tube cutter	1
TL-0081	Bundle jacket stripper (18 gauge for 6-fiber bundles)	1
TL-0113	Bundle jacket stripper (12 gauge for 18-fiber bundles)	1
TL-0114	Clear jacket stripper (20 gauge for 6-fiber bundles)	1
	Scissors	1
	Fiber, BOF single fibers or fibers from a BOF bundle	As required
	Straight tube coupler (A-A-59731-U-8)	As required
	Tee tube coupler (A-A-59731-T-8)	As required
	2-mm (0.079-inch) filtered polyacrylamide water-blocking crystals	0.5 grams (0.018 ounce) (provided)
	Clear high-density polyethlene BOF tubing (8-mm OD)	2.54- to 7.62-cm (1- to 3-inch) piece, any length may be substituted
TL-0002 or TL-0044	Isopropyl alcohol, 99% pure anhydrous or alcohol pad, sealed	As required
TL-0016	Wipes (if not using pre-wetted alcohol pads)	As required
	Colored tubing or tape	As required
	Distilled Water	As required
TL-0013	Canned air	As required
NOTE: Products to be considered for addition to the recommended tool or test equipment shall obtain approval as specified (see 6.5).		

4. PROCEDURES

4.1 Safety summary. The following safety procedures shall be observed:

a. Observe warnings and cautions on equipment and materials.

b. Wear safety glasses at all times when handling bare fibers or dispensing adhesive.

c. Do not touch the ends of the fiber as they may be razor sharp. Wash your hands after handling bare fiber.

d. Do not stare into the end of a fiber until verifying that the fiber is not connected to a laser light source or LED.

4.2 Procedure.

NOTE: Previously used BOF tube couplers may not adequately seal to BOF tubes. When installing BOF cabling, it is recommended to clean previously used couplers or use new tube couplers. A cotton swab may be used to remove shavings from the inside of previously used tube couplers.

NOTE: BOF tube couplers may be cleaned using distilled water and blown dry with air. BOF tube couplers shall not be cleaned or soaked in alcohol or other cleaning agents. BOF tube couplers can be permanently damaged by exposure to alcohol and cleaning agents.

4.2.1 Tube and fiber preparation. The following steps shall be performed:

NOTE: Before mating BOF tubes to BOF tube couplers, clean the end of each BOF tube with a wipe dampened with alcohol and blow dry as necessary.

CAUTION: Do not exceed a bend diameter of 13 centimeters (5 inches) for 8-millimeter BOF tubes. 8-millimeter BOF tubes may collapse at diameters less than 13 centimeters (5 inches).

Step 1. Insert the individual fibers or bundled fiber into the tube coupler. Slide the tube coupler over the individual fibers or bundle to the BOF tube. Slide the tube coupler onto the BOF tube and seat it firmly (see figure 2F3-1).

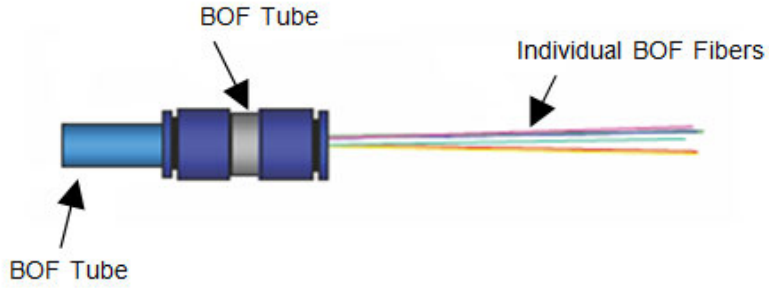

FIGURE 2F3-1. Completed tube and fiber preparation.

Step 2. Using the scissors, trim back the individual fibers or fiber bundle that exits the tube coupler to approximately 84 centimeters (33 inches) longer than the loose tube furcation cable length. If the 18-fiber bundle approach described in step 4.a below is utilized, trim the fiber bundle to approximately 115 centimeters (45 inches) longer than the loose tube furcation cable length. For individual fiber installations, skip to step 5.

NOTE: The required length of individual fibers or fiber bundle and the loose tube furcation cables extending from the furcation assembly depends upon the equipment and fiber routing. This length may be determined by measuring the distance required to route the fiber from the end of the BOF tube to the furthermost connection point in the equipment plus approximately 130 millimeters (5 inches). The 84 centimeters (33 inches) (115 centimeters [45 inches] for 18-fiber bundle) mentioned above is in addition to this length.

Step 3. For each tapered tube plug, place the tapered tube plug in the clear tubing and, if necessary, trim the flange to the diameter of the tube using scissors or other appropriate cutting tool. Remove tapered tube plug from clear tubing.

Step 4. For tubes containing BOF bundles only:

NOTE: For 18-fiber bundles, fibers of the same color are contained in each 6-fiber subunit. The sixth fiber color in each of the three 6-fiber subunits identifies the particular subunit. During the installation of the furcation unit, it is important to know the 6-fiber subunit that each fiber comes from. One method to uniquely mark the fibers of each 6-fiber subunit is to make the fibers of each subunit a slightly different length. See table 2F3-II for fiber color coding.

a. Optional step for 18-fiber bundles: Using the scissors, cut off approximately 100 millimeters (4 inches) of the fibers from one 6-fiber subunit. Then cut off approximately 200 millimeters (8 inches) of the fibers from a different 6-fiber subunit.

b. Mark the bundle jacket approximately 25 millimeters (1 inch) from the tube coupler.

NOTE: Do not pull slack fiber bundle out of the BOF tube while breaking out the bundled fibers. If slack fiber bundle is accidentally pulled out of the BOF tube, re-establish the bundle to its original position (using the 25-millimeter [1-inch] mark on the bundle jacket as an index) and continue the procedure.

c. Using the bundle jacket stripper, remove the exposed bundle jacket in approximately 160-millimeter (6-inch) lengths back to the mark (see figure 2F3-2).

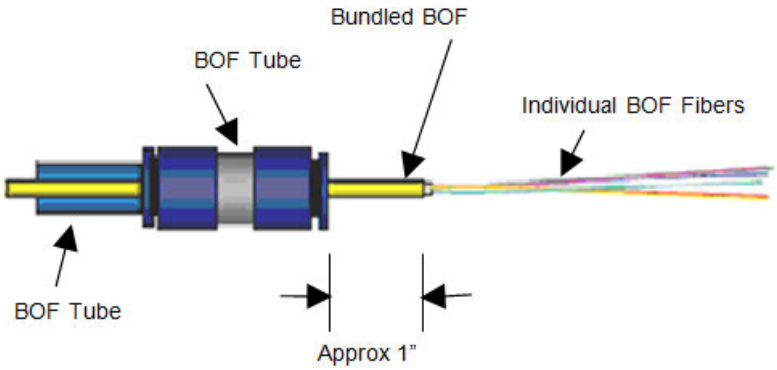

FIGURE 2F3-2. Preparation of bundled fiber.

NOTE: Once a short length of the bundle jacket has been removed, the remaining length can be torn off of the bundle by hand.

d. Using the clear jacket stripper, remove approximately 80 millimeters (3 inches) of the clear inner jacket from the end of each six-fiber subunit.

NOTE: If the wire stripper does not bite into the inner jacket, position the wire stripper at a 30- to 40-degree angle to increase its bite.

e. Find the ripcord from among the six fibers. Ensure that it is not crossed with any of the fibers. While holding the group of fibers in one hand, pull the ripcord along the bundle with the other hand. Pull the ripcord until it reaches the mark on the bundle jacket.

NOTE: The ripcord and fibers spiral along the bundle length. Take care to follow the spiral when pulling the ripcord.

f. Starting at the end of the fiber bundle subunit, carefully pull the group of fibers from the clear inner jacket.

g. Using the scissors, carefully cut away the ripcord and the clear inner jacket.

h. Check both ends of the clear tubing to verify they are perpendicular to the tube length. Clean the ends of the BOF tube with a wipe dampened with alcohol and blow dry as necessary. Skip to step 6.

Step 5. Insert the individual fibers into the short piece of clear BOF tube provided. Slide the clear BOF tube over the fibers to within approximately 50 millimeters (2 inches) of the tube coupler (see figure 2F3-3). Skip to step 7.

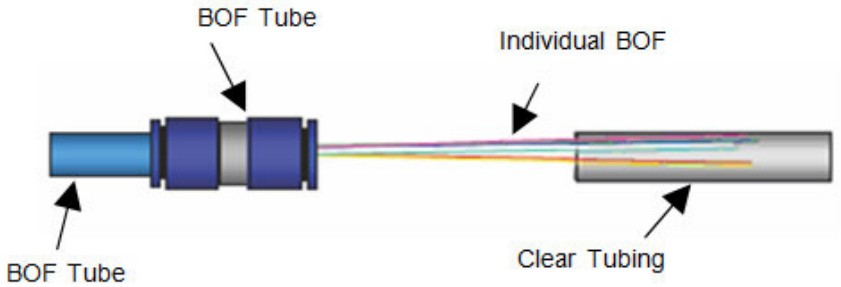

FIGURE 2F3-3. Installation of clear BOF tubing.

Step 6. For BOF bundles only:

NOTE: The tapered tube plug should be oriented with the tapered tube end of the plug towards the short piece of clear BOF tube.

a. Place the provided tapered tube plug around the exposed bundle jacket approximately 19 millimeters (0.75 inch) from the BOF tube coupler (see figure 2F3-4).

b. Push the short piece of clear BOF tube over the tapered tube plug until the plug is fully inserted into the tube. Skip to step 8.

NOTE: Do not pull slack fiber bundle out of the BOF tube while assembling the plug to the bundle jacket and the clear BOF tube. If slack fiber bundle is accidentally pulled out of the BOF tube, re-establish the bundle to its original position and continue the procedure.

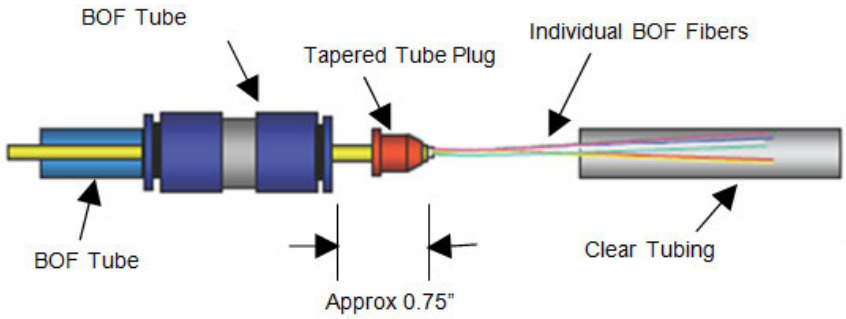

FIGURE 2F3-4. Installation of tapered tube plug for bundled fiber.

Step 7. For tubes containing individual blown fibers only:

a. Work a small amount of sealant tape around the optical fibers approximately 12 millimeters (0.5 inch) from the end of the BOF tube coupler.

b. Place the tapered tube plug around the optical fibers and sealant tape (see figure 2F3-5).

NOTE: The tapered tube plug should be oriented with the tapered tube end of the plug towards the short piece of clear BOF tube.

NOTE: The installer is cautioned to ensure that both ends of the tube are cut perpendicularly to the tube length. Clean the ends of the BOF tube with a wipe dampened with alcohol and blow dry as necessary.

c. Push the short piece of clear BOF tube over the tapered plug until the plug is fully inserted into the tube.

NOTE: Do not pull slack fiber out of the BOF tube while assembling the plug to the individual blown fibers and the clear BOF tube. If slack fiber is accidentally pulled out of the BOF tube, re-establish the fiber to its original position and continue the procedure.

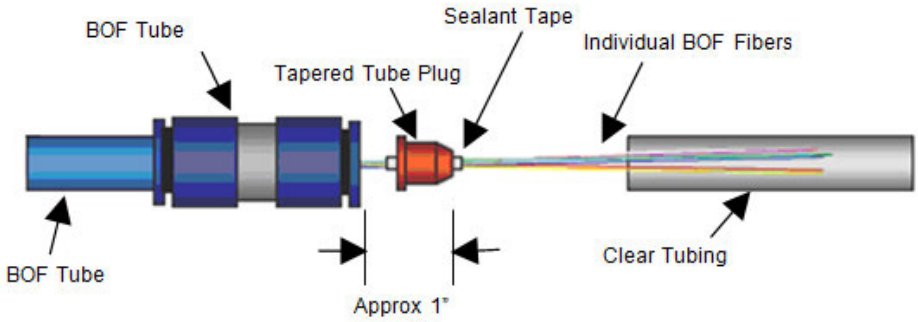

FIGURE 2F3-5. Installation of tapered tube plug for individual fibers.

Step 8. Slide the short piece of clear BOF tube with the tapered tube plug into the tube coupler and seat firmly (see figure 2F3-6). Apply a light load of approximately 22 Newtons (5 pounds) between the tube and the coupler to ensure the tube is fully engaged onto the coupler.

NOTE: The optical fibers should now be fixed in the tapered tube plug in the BOF tube and should not move in or out during the furcation unit installation or fiber termination process.

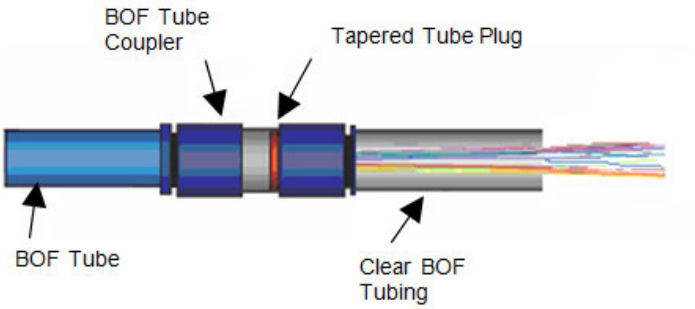

FIGURE 2F3-6. Completed clear tube preparation.

Step 9. Insert the individual fibers into the tee tube coupler, slide to the short piece of clear BOF tube, and seat firmly (see figure 2F3-7). Apply a light load of approximately 22 Newtons (5 pounds) between the coupler and the tube to ensure the coupler is fully engaged onto the tube.

NOTE: The tee tube coupler should have 8-millimeter through openings on all entry points.

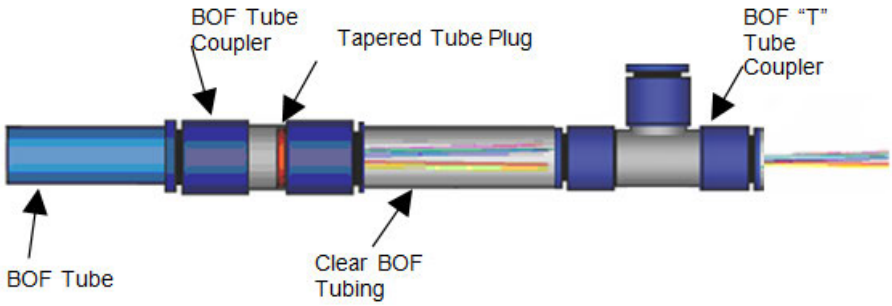

FIGURE 2F3-7. Installation of tee tube coupler.

NOTE: The installer is cautioned to ensure that both ends of the tube are cut perpendicularly to the tube length. Clean the ends of the BOF tube with a wipe dampened with alcohol and blow dry as necessary.

Step 10. Insert the individual fibers into the second short piece of clear BOF tube provided and seat firmly into the tee tube coupler. Apply a light load of approximately 22 Newtons (5 pounds) between the tube and the coupler to ensure the tube is fully engaged onto the coupler.

NOTE: The tapered tube plug in the next step should be oriented with the tapered tube end of the plug towards the short piece of clear BOF tube.

Step 11. Place the tapered tube plug around the optical fibers. Push the tapered tube plug into the short piece of BOF tube until the plug is fully inserted into the tube. See figure 2F3-8 for the completed tee tube coupler installation.

NOTE: Avoid excessive slack or bends in the fibers between the two tapered tube plugs. Excessive slack or bending of the fibers may cause increased optical loss or fiber breakage.

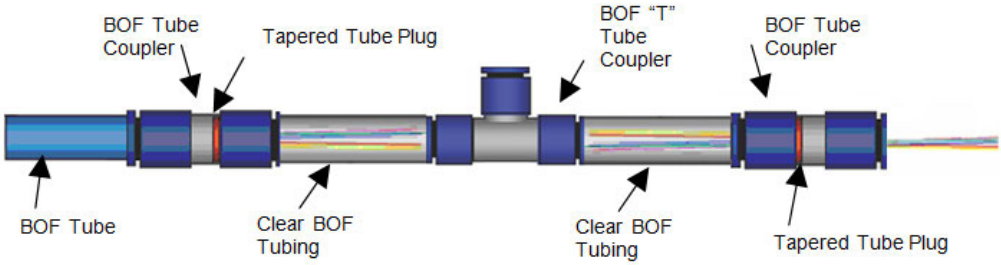

FIGURE 2F3-8. Completed preparation of tee tube coupler installation.

Step 12. Proceed to 4.2.2, step 1.

4.2.2 Furcation. The following steps shall be performed:

Step 1. Remove the 3-inch tube that is attached to the coupler on the furcation unit. Insert the individual fibers into the 3-inch tube. Slide the short tube into the BOF coupler and seat firmly.

Step 2. Insert each individual fiber into one of the loose tube furcation tubes within the furcation unit (see figure 2F3-9). Feed each fiber through the furcation unit until all of the fibers are protruding from the ends of the individual loose tube furcation cables.

NOTE: It may be possible to simultaneously feed all of the individual fibers through the buffer tubes. This requires that the feeding of all of the individual fibers into buffer tubes have started. It also requires great care in the feeding process, but could expedite the installation process.

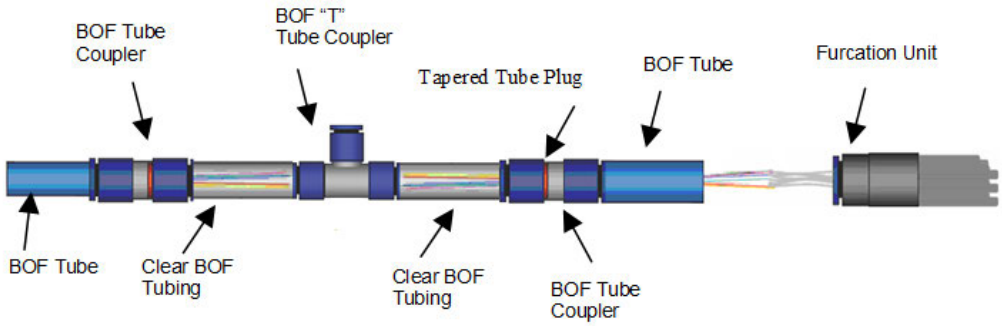

FIGURE 2F3-9. Insertion of fiber into furcation unit.

Step 3. Carefully insert the furcation assembly tube coupler onto the BOF tube and seat firmly (see figure 2F3-10). Ensure that no fibers are kinked within the tube as it is inserted into the tube coupler. Apply a light axial load of approximately 22 Newtons (5 pounds) between the BOF tube and the furcation unit to verify coupler engagement.

NOTE: Do not rotate the furcation unit with respect to the BOF tube cable. Rotation of the furcation unit may cause increased optical loss or fiber breakage.

NOTE: Furcation units utilized should have a furcation cable for each of the fibers in the BOF tube. If the number of fibers in the BOF tube exceeds the number of furcation cables by design, the additional fibers may be cut off after the required fibers are installed through their furcation cables.

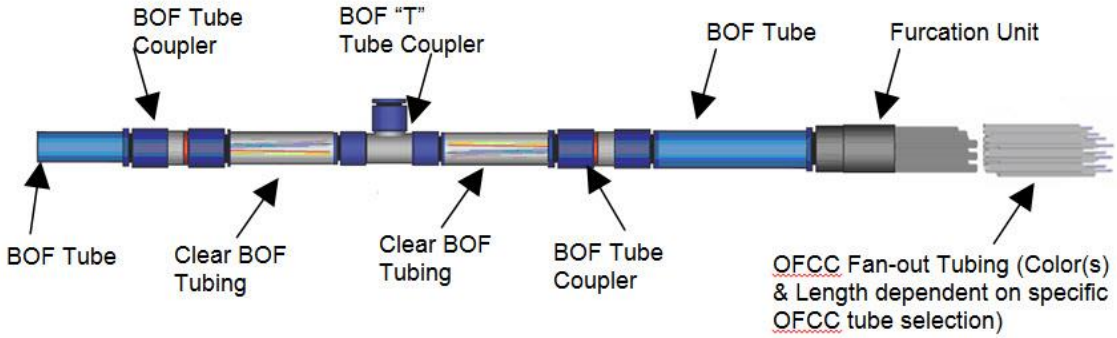

FIGURE 2F3-10. Attachment of furcation unit to tee tube coupler assembly.

NOTE: Ensure that the assembly of all couplers from the fiber optic cable plant (FOCP) to the furcation unit are securely seated. This is accomplished by applying a light axial load of approximately 22 Newtons (5 pounds) to the series of couplers between the cable plant BOF tube and the furcation unit to verify overall coupler engagement.

Step 4. Utilizing a labeling methodology in accordance with local requirements, label each loose tube furcation cable to identify the fiber within that furcation cable. If marking the color of the fiber within each furcation cable, colored heat shrink tubing or tape may be used. See table 2F3-II for fiber color coding.

Step 5. End seal any furcation cables that will not be terminated in accordance with MIL-STD-2042-1, Method 1E1.

TABLE 2F3-II. Fiber color coding.

Fiber number	**General Cable fiber color**	**Sumitomo Electric fiber color**		
		12-fiber bundle	**18-fiber bundle**	
			Subunit color [1/]	**Fiber color**
1	Blue	Blue	Red	Blue
2	Orange	Orange		Orange
3	Green	Green		Green
4	Brown	Brown		Brown
5	Slate	Slate		Slate
6	White	White		Red
7	Red	Red	Violet	Blue
8	Black	Black		Orange
9	Yellow	Yellow		Green
10	Violet	Violet		Brown
11	Rose	Rose		Slate
12	Aqua	Aqua		Violet
13	N/A	N/A	Yellow	Blue
14	N/A	N/A		Orange
15	N/A	N/A		Green
16	N/A	N/A		Brown
17	N/A	N/A		Slate
18	N/A	N/A		Yellow

NOTE:

[1/] The subunits of the 18-fiber bundles do not have color coded subunit jackets. The subunit color is determined by the presence of red, violet, or yellow colored fiber within the subunit.

Step 6. Proceed to 4.2.3, step 1 for installation of polyacrylamide crystals.

4.2.3 Polyacrylamide crystal insertion. The following steps shall be performed:

Step 1. Remove plug from tee tube coupler and set aside.

Step 2. Insert a spare tube into the tee coupler opening.

a. Insert polyacrylamide crystals (approximately 0.5 gram [0.017 ounce]) into spare tube and visually fill clear BOF tube around the fibers to mid-point (see figure 2F3-11).

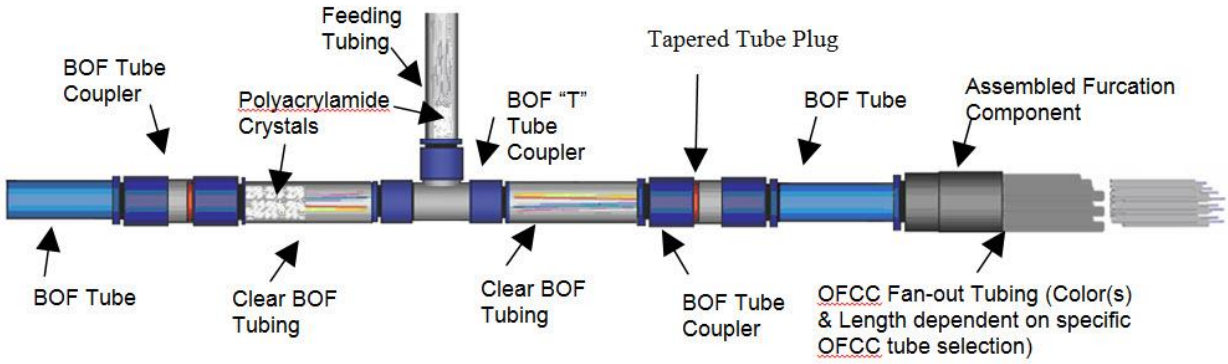

FIGURE 2F3-11. Insertion of polyacrylamide crystals through tee tube coupler.

NOTE: If crystals do not free fall, finger tap on tee tube coupler as necessary.

b. Remove spare BOF filling tube and replace plug into the BOF tee coupler (see figure 2F3-12).

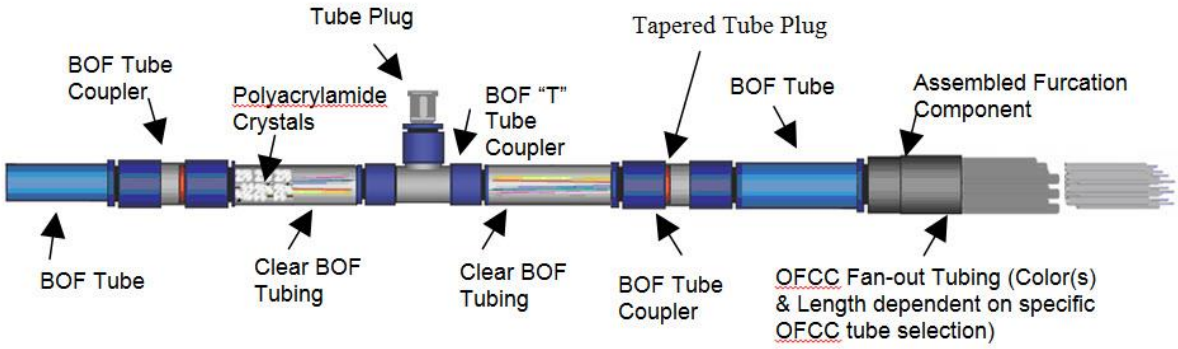

FIGURE 2F3-12. Completed tee tube coupler furcation assembly with polyacrylamide crystals.

METHOD 2F4
TUBE FURCATION UNIT INSTALLATION, BLOWN OPTICAL FIBER, EXTERNAL

1. SCOPE

1.1 Scope. This method describes the procedure for transitioning fibers from one M85045/27 single-tube BOF cable into loose-tube furcation cables that can be fed into the interior of equipment. Inside the equipment, the loose-tube furcation cables are terminated with light-duty, single-terminus connectors (i.e., STs, SCs, etc.). The furcation takes place inside a conduit assembly external to the equipment. This method is applicable when there is not sufficient space within the interior of equipment to accommodate a BOF furcation unit and its associated cabling.

2. DOCUMENTS APPLICABLE TO METHOD 2F4

2.1 General. The documents listed in this section are specified in Method 2F4 of this standard. This section does not include documents cited in other sections of this standard or recommended for additional information or as examples. While every effort has been made to ensure the completeness of this list, document users are cautioned that they must meet all specified requirements of documents cited in Method 2F4 of this standard, whether or not they are listed.

2.2 Government documents.

2.2.1 Specifications, standards, and handbooks. The following specifications, standards, and handbooks form a part of this document to the extent specified herein. Unless otherwise specified, the issues of these documents are those cited in the solicitation or contract.

DEPARTMENT OF DEFENSE STANDARDS

MIL-STD-2042-5 - Fiber Optic Cable Topology Installation, Standard Methods for Surface Ships and Submarines (Connectors and Interconnections) (Part 5 of 7 Parts)

(Copies of these documents are available online at http://quicksearch.dla.mil/.)

2.2.2 Other Government documents, drawings, and publications. The following other Government documents, drawings, and publications form a part of this document to the extent specified herein. Unless otherwise specified, the issues of these documents are those cited in the solicitation or contract.

NAVAL SEA SYSTEMS COMMAND (NAVSEA) DRAWINGS

7339714 - Adapter, Bulkhead, Fiber Optic Cable

7627506 - Conduit Assembly, Blown Optical Fiber

(Copies of these documents are available from NSWC Dahlgren by emailing DLGR_NSWC_FOWEB@navy.mil.)

2.3 Order of precedence. Unless otherwise noted herein or in the contract, in the event of a conflict between the text of this document and the references cited herein, the text of this document takes precedence. Nothing in this document, however, supersedes applicable laws and regulations unless a specific exemption has been obtained.

3. REQUIRED EQUIPMENT AND MATERIALS

3.1 Equipment and materials. The equipment and materials in table 2F4-I shall be used to perform this procedure. More detail on approved sources for items with reference numbers can be found on the Dahlgren shipboard fiber optics website (see 6.6). The list on which items appear is indicated by the two-letter prefix as follows:

a. TL = Recommended Tool List

b. TS = Recommended Test Equipment List

TABLE 2F4-I. Equipment and materials.

Reference #	Description	Quantity
TL-0071	Safety glasses	1
TL-0069	Ruler	1
	Utility knife	1
TL-0130	Tube cutter	1
TL-0012	Cable jacket stripping tool	1
	Kapton tape (Pemacel P/N P224, or equal [see 4.6])	As required
TL-0101	Heat gun	1
	Marking pen	1
	Rubber tipped/lined pliers	1
TL-0077	Strap wrench	1
TL-0090	Torque wrench	1
	Adapter, bulkhead, fiber optic cable, DWG 7339714-2 (adapter 1)	1
	Size 24 conduit assembly, DWG 7627506-Y, Glenair Part No. 749-720-1-XX, or equal (see 4.6), where Y designates the length in feet and XX designates the length in inches. Available length ranges from 1 foot (12 inches) to 5 feet (60 inches).	1
	Adapter 2, 0.750-20 UNEF-28 (Mates conduit to adapter 1)	1
NOTE: Products to be considered for addition to the recommended tool or test equipment shall obtain approval as specified (see 6.5).		

4. PROCEDURES

4.1 Safety summary. The following safety procedures shall be observed:

a. Observe warnings and cautions on equipment and materials.

b. Wear safety glasses at all times when handling bare fibers.

c. Do not touch the ends of the fiber as they may be razor sharp. Wash your hands after handling bare fiber.

d. Do not stare into the end of a fiber until verifying that the fiber is not connected to a laser light source or LED.

4.2 Procedure.

4.2.1 Installation of adapter 1 onto single-tube BOF cable. The following steps shall be performed:

Step 1. Using proper length conduit assembly, determine where adapter 1 is to be located and mark the single-tube cable jacket.

NOTE: Ensure cable length is adequate for later trimming. Approximately 100 millimeters (4 inches) should extend beyond the mark.

NOTE: Conduit assembly shall be sufficiently long to allow banding to at least one cableway hanger. Long- and short-term bend diameter shall be not less than 100 millimeters (4 inches).

Step 2. Strip back the cable jacket to the mark applied in step 1.

NOTE: Be careful not to damage the BOF tube when stripping the cable jacket.

Step 3. Cut back the aramid yarn, leaving approximately 50 millimeters (2 inches) from the end of the jacket.

Step 4. Place the shrink tubing, adapter 1, and strain-relief ferrule on the cable in the sequence shown in figure 2F4-1.

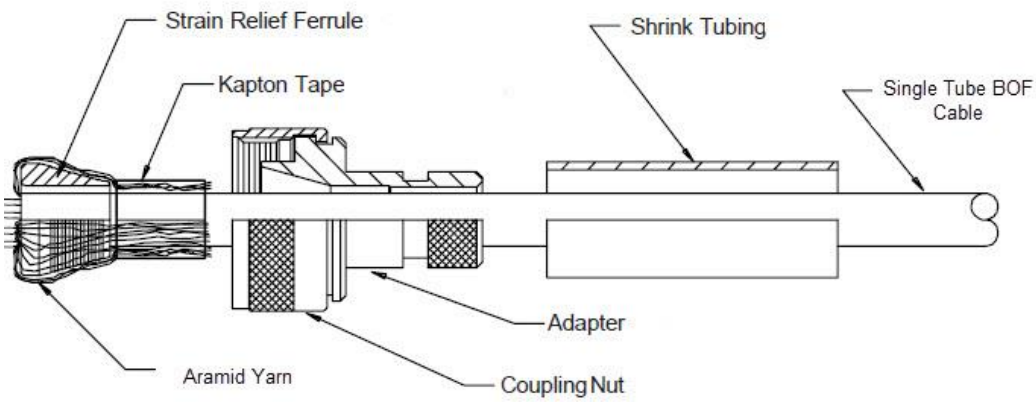

FIGURE 2F4-1. Installation of adapter 1 onto single tube BOF cable.

Step 5. Line up the strain-relief ferrule to the end of the single tube BOF cable jacket. Pull back and evenly spread the aramid yarn around the ferrule. See figure 2F4-1.

Step 6. Use Kapton tape to tape around the aramid yarn at the end of the ferrule and trim off excess aramid yarn. See figure 2F4-1.

Step 7. Slide the shrink tubing over the back of adapter 1 and shrink it using the heat gun. See figure 2F4-1.

CAUTION: Do not overheat the BOF cable. Prolonged exposure of the jacket to temperatures above 160 °C (320 °F) may damage the BOF cable jacket. Discontinue heating of the sleeve and allow the BOF cable jacket to cool before reheating if the BOF cable jacket shows any signs of bubbling.

4.2.2 Installation of adapter 2 onto adapter 1. The following steps shall be performed:

Step 1. Install adapter 2 onto adapter 1 using Steps 2 through 4.

Step 2. If a jam nut came with adapter 1, discard it.

Step 3. Install provided O-ring into face of adapter 1.

Step 4. Remove adapter 2 from the conduit assembly. Screw adapter 2 onto adapter 1. Tighten the adapter securely using Glenair 600 series backshell assembly tools, or equal (see 4.6). Recommended torque value is 5.65 to 6.75 Newton-meters (50 to 60 inch-pounds). Be careful not to twist, bend, or crimp the BOF tube during tightening.

4.2.3 Installation of fibers and tube furcation unit. The following steps shall be performed:

Step 1. Cut off and trim the BOF tube 50 millimeters (2 inches) from the face of adapter 2 with a tube cutter. Visually verify that the end of the tube is cut perpendicular to the tube length. Clean the end of the BOF tube with a wipe dampened with alcohol and blow dry as necessary.

Step 2. Blow the fibers or bundle through the single-tube BOF cable, leaving a sufficient length extending from the end of the cable. (See 4.2.1, Step 2 of Method 2F2 to determine required length.)

Step 3. Install the furcation unit on the tube in accordance with Method 2F2.

4.2.4 Installation of conduit assembly. The following steps shall be performed:

Step 1. Carefully feed loose tube furcation cables with installed fibers through conduit assembly starting from end that attaches to adapter 2.

NOTE: It is recommended to wrap all loose tube furcation cable ends together with a piece of tape.

Step 2. Carefully slide the conduit down over the BOF furcation unit and coupler. Screw the conduit onto adapter 2. Tighten, without twisting adapter 1, using rubber tipped pliers to hold the bulkhead adapter and a strap wrench with torque wrench to attach the coupling nut to the backshell. Recommended torque value is 5.65 to 6.75 Newton-meters (50 to 60 inch-pounds).

Step 3. Install conduit assembly on the equipment using steps 4 through 6.

NOTE: Conduit assembly shall be banded to at least one cableway hanger. Long- and short-term bend diameter shall be not less than 100 millimeters (4 inches).

Step 4. Remove jam nut from the end of the conduit assembly.

Step 5. Carefully thread loose tube furcation cables through equipment panel hole and insert threaded end of conduit into panel.

Step 6. Slide jam nut up over loose tube furcation cables and tighten onto end of conduit.

Step 7. If used, remove tape from the bundle of loose tube furcation cables. Route loose tube furcation cables through the equipment and terminate via a method in MIL-STD-2042-5. Figure 2F4-2 illustrates a completed external furcation.

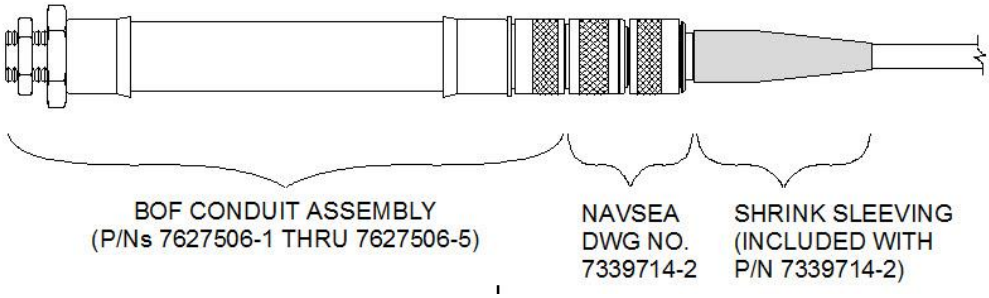

FIGURE 2F4-2. Completed external single tube BOF furcation.

METHOD 2G1
BOF CABLE ENTRANCE TO EQUIPMENT VIA NYLON STUFFING TUBES

1. SCOPE

1.1 Scope. This method describes the procedures for BOF cable entry to FOCT and other equipment through nylon stuffing tubes.

2. DOCUMENTS APPLICABLE TO METHOD 2G1

2.1 General. The documents listed in this section are specified in Method 2G1 of this standard. This section does not include documents cited in other sections of this standard or recommended for additional information or as examples. While every effort has been made to ensure the completeness of this list, document users are cautioned that they must meet all specified requirements of documents cited in Method 2G1 of this standard, whether or not they are listed.

2.2 Non-Government publications. The following documents form a part of this document to the extent specified herein. Unless otherwise specified, the issues of these documents are those cited in the solicitation or contract.

AMERICAN SOCIETY FOR TESTING AND MATERIALS (ASTM)

ASTM F1836M - Standard Specification for Stuffing Tubes, Nylon, and Packing Assemblies (Metric)

(Copies of this document are available online at www.astm.org.)

2.3 Order of precedence. Unless otherwise noted herein or in the contract, in the event of a conflict between the text of this document and the references cited herein, the text of this document takes precedence. Nothing in this document, however, supersedes applicable laws and regulations unless a specific exemption has been obtained.

3. REQUIRED EQUIPMENT AND MATERIALS

3.1 Equipment and materials. The equipment and materials in table 2G1-I shall be used to perform this procedure. More detail on approved sources for items with reference numbers can be found on the Dahlgren shipboard fiber optics website (see 6.6). The list on which items appear is indicated by the two-letter prefix as follows:

a. TL = Recommended Tool List

b. TS = Recommended Test Equipment List

TABLE 2G1-I. Equipment and materials.

Reference #	Description	Quantity
TL-0071	Safety glasses	1
TL-0069	Ruler	1
	Deburring tool (or equivalent)	1
	Paint scraper	1
	Emery cloth	As required
TL-0012	Cable jacket stripping tool	1
TL-0045	Aramid yarn shears	1
	Open end wrench (sized to fit locknut)	1
TL-0004	Spanner wrench (sized to fit cap)	1
	Primer (type to suit metal)	As required
	Talc (soap stone)	As required
	RTV silicone rubber (Silastic 731, or equal [see 4.6])	As required
TL-0002 or TL-0044	Isopropyl alcohol, 99% pure anhydrous or alcohol pad, sealed	As required
TL-0016	Wipes (if not using pre-wetted alcohol pads)	As required
TL-0013	Canned air	As required
NOTE: Products to be considered for addition to the recommended tool or test equipment shall obtain approval as specified (see 6.5).		

4. PROCEDURE

4.1 Safety summary. The following safety precautions shall be observed:

a. Observe warnings and cautions on equipment and materials.

b. Do not look into the end of a BOF tube. Always wear approved safety glasses when handling BOF tubes that may be connected to a pressure source.

4.2 Procedure. The following steps shall be performed:

NOTE: Packing assemblies and O-rings are not furnished with stuffing tubes. They must be ordered separately by the installing activity to suit installations.

Step 1. Select the stuffing tube, packing, and O-ring in accordance with tables 2G1-II and 2G1-III.

NOTE: Ensure a proper fit between the cable and the packing assembly. If the fit is not correct, either too loose or too tight, then verification of cable OD may be needed. Selection of the next size (larger or smaller) of packing material corresponding with the measured cable OD in accordance with ASTM F1836M may be required.

TABLE 2G1-II. Nylon stuffing tube sizes for BOF cable.

Type of cable	Cable OD mm (in) nominal	Tube size	Packing assembly P/N ASTM F1836M/	Packing assembly opening mm (in)
Single-tube	11.125 (0.45)	3	18-018	12.0 (0.47)
7-tube	29.0 (1.14)	6	21-001	29.44 (1.16)
	31.5 (1.25)	6	21-004	31.6 (1.25)
19-tube	50.8 (2.00)	9	24-002	53.2 (2.09)

TABLE 2G1-III. Nylon stuffing tube ASTM data.

Stuffing tube sizes		Tube size 3	Tube size 6	Tube size 9
45-degree angle tube	Tube P/N ASTM F1836M/	N/A	1/	N/A
	O-ring P/N ASTM F1836M-	N/A	1/	N/A
90-degree angle tube	Tube P/N ASTM F1836M/	2-003	N/A	N/A
	O-ring P/N ASTM F1836M-	216	N/A	N/A
National Pipe Thread (NPT) tube	Tube P/N ASTM F1836M/	3-003	3-006	3-009
	NPT Tap mm (in)	25 (1.0)	50.8 (2.0)	88.9 (3.5)
"Y" tube	Tube P/N ASTM F1836M/	4-03	N/A	N/A
	O-ring P/N ASTM F1836M-	216	N/A	N/A

FOOTNOTE:

1/ Contact NSWCDD for these part numbers (6.5).

NOTE:

1. 90-degree angle and "Y" tubes are not defined for 7- and 19-tube BOF cables. These stuffing tubes are not compatible with the 7- and 19-tube BOF cables.

WARNING: Wear safety glasses during deburring to avoid possible eye injury.

Step 2. Inspect the hole in the enclosure and remove any burrs or irregularities using the deburring tool.

Step 3. For steel enclosures where the roughness is greater than a 125-microinch finish (not required on aluminum enclosures), remove the paint using a paint scraper and clean the surface with emery paper approximately 13 millimeters (0.5 inch) wide around the hole on the exterior of the enclosure. Apply one coat of primer, and allow to set. Dust-coat the surface with talc if the primer is not thoroughly dried at the time of the stuffing tube installation. Remove the cover and proceed to step 4 (straight tube), 5 (45-degree tube), 6 ("Y" or 90-degree tube), or 8 (NPT tube) below, as applicable.

Step 4. With straight tubes, insert the stuffing tube body into the hole from the inside of the enclosure (see figure 2G1-1). If necessary, remove the interior fitting from enclosure. Proceed to step 7 below.

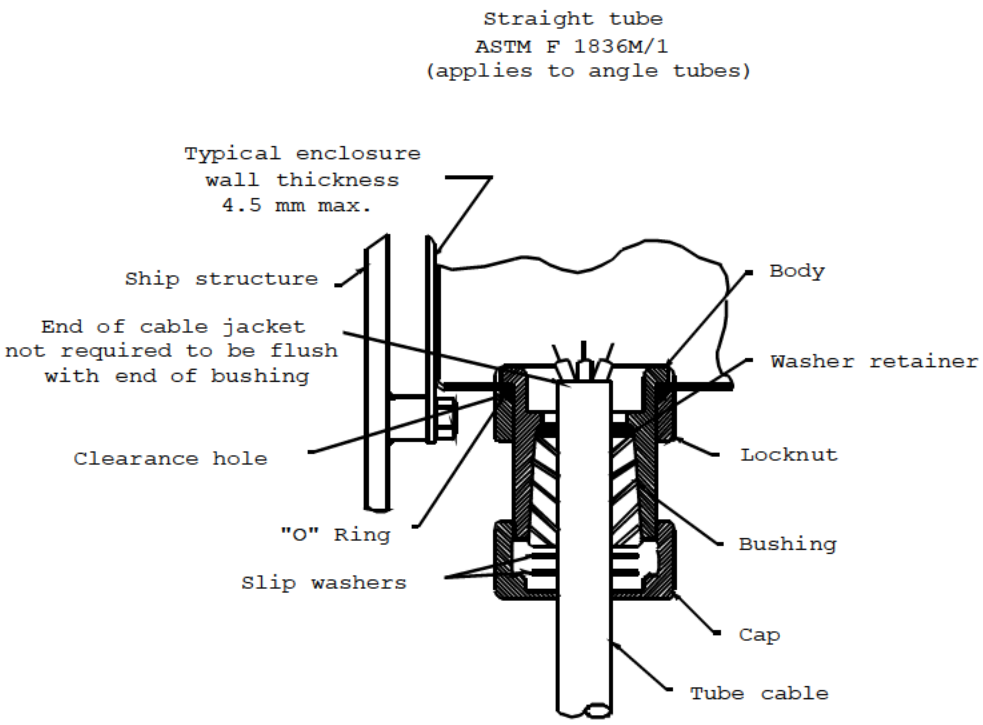

FIGURE 2G1-1. Straight tube.

Step 5. With 45-degree angle tubes, insert the stuffing tube body into the hole from the outside of the enclosure (see figure 2G1-2). The excess length protruding into the enclosure may be removed. Proceed to step 7 below.

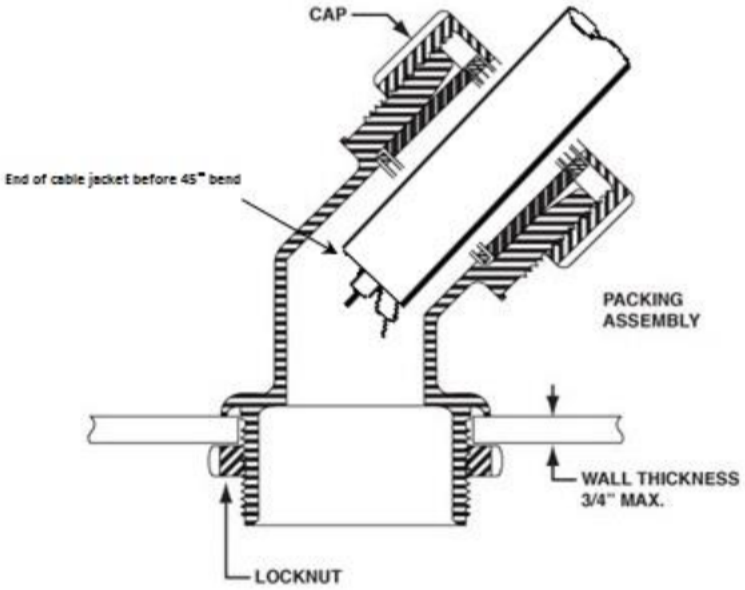

FIGURE 2G1-2. 45-degree angle tube.

Step 6. With "Y" and 90-degree angle tubes, insert the stuffing tube body into the hole from the outside of enclosure (see figures 2G1-3 and 2G1-4). The excess length protruding into the enclosure may be removed.

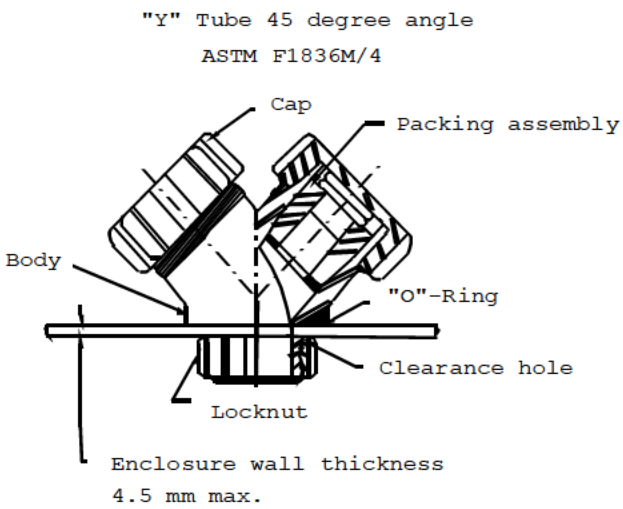

FIGURE 2G1-3. "Y" tube.

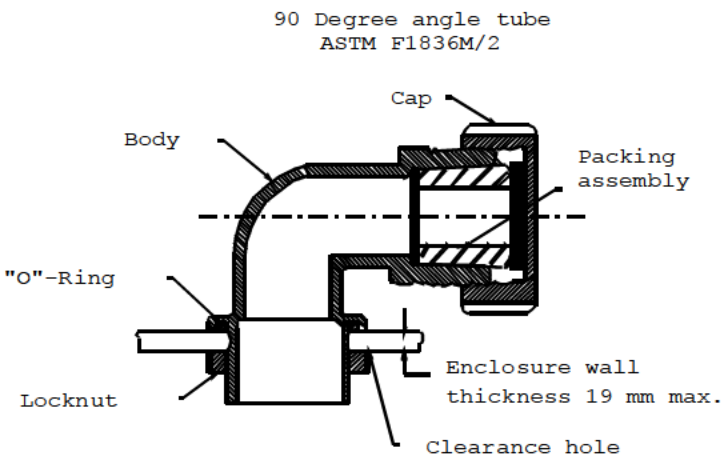

FIGURE 2G1-4. 90-degree angle tube.

Step 7. Screw the locknut onto the body and tighten with a wrench against the O-ring sufficiently to obtain plastic-to-metal contact of the stuffing tube and the enclosure. In cases where this plastic-to-metal contact cannot be obtained, tighten the locknut until the threads start to skip. This is considered a satisfactory indication of tightness. Proceed to step 9 below.

NOTE: Hold the stuffing tube body while tightening the locknut to prevent turning.

Step 8. With NPT tubes, screw the tube into the enclosure pipe thread and tighten it sufficiently to obtain a seal at the threads (see figure 2G1-5).

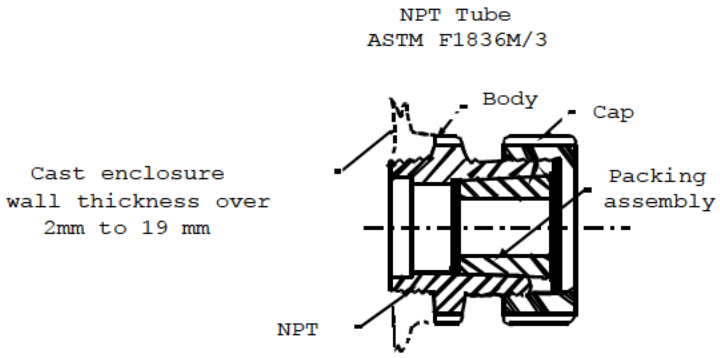

FIGURE 2G1-5. NPT tube.

Step 9. Measure the distance required to route the BOF tubes from the innermost portion of the stuffing tube to the most distant corner of the interconnection box (or to the furcation or end sealing region in the end user equipment). Add approximately 130 millimeters (5 inches) to the distance and mark the BOF cable outer jacket.

Step 10. Slide the stuffing tube parts onto the BOF cable in the following order:

a. Cap

b. Two slip washers

c. Rubber bushing

d. Bottom washer

Step 11. Slide the parts up the BOF cable beyond the mark and, if not already done, remove the outer jacket up to the mark using the cable stripper. Cut off the cable aramid yarn strength members and waterblocking materials, if present, using aramid yarn shears.

If the required length of any of the BOF tubes is shorter than the exposed tube length, trim the tubes to the appropriate length.

NOTE: If cable strength member capture is planned, leave approximately 100 millimeters (4 inches) of the aramid yarn strength members protruding from the cable jacket.

NOTE: Make sure that the individual BOF tubes are not punctured, crushed, or kinked while trimming back the cable elements and the BOF tubes that will not be routed into the equipment.

Step 12. Clean the BOF cable jacket and BOF tubes using a wipe dampened with alcohol and blow dry as necessary.

Step 13. End seal the BOF tubes that will not be routed into the equipment using Method 2J1-1. For 45-degree angle stuffing tube installations, proceed to step 14. Skip to step 15 for all other stuffing tube type installations.

NOTE: This step may be performed after cable insertion into the stuffing tube if there is a problem inserting the BOF cable through the stuffing tube with the BOF tubes end sealed.

Step 14. For 45-degree angle stuffing tube installations, the BOF cable jacket should stop before the angle in the stuffing tube is reached (see figure 2G1-2). Position the rubber bushing such that the bottom of the rubber bushing is 25 millimeters (1 inch) above the end of the cable jacket. Insert the BOF cable through the stuffing tube until the rubber bushing is properly seated in the tube. Skip to step 16.

Step 15. Insert the BOF cable through the stuffing tube and into the enclosure so that the outer jacket will protrude completely through the rubber bushing. Slide the washers and bushing down the cable into the stuffing tube.

NOTE: When necessary to pass an airtight test, apply RTV silicone rubber to the bushing.

Step 16. Slide the cap down the BOF cable, screw it onto the stuffing tube and tighten it sufficiently using the spanner wrench to compress the bushing to form a tight seal between the BOF cable and the stuffing tube.

NOTE: Hold the stuffing tube body when tightening the cap to prevent breaking the watertight seal.

Step 17. After the bushing has been compressed for approximately 24 hours, retighten it to ensure the seal is maintained.

Step 18. If required, wind the exposed aramid yarn strength member under a screw lug attached beside the stuffing tube and tighten the screw lug.

NOTE: This step is only performed when additional strain relief is required beyond that provided by the stuffing tube assembly.

Step 19. If the BOF tubes will not be immediately formed and shaped within the equipment, close the equipment cover to keep dirt and moisture out of the BOF tubes.

METHOD 2H1
BOF CABLE ENTRANCE TO EQUIPMENT VIA INTEGRAL MCP WITH M24705/1 TYPE INSERT BLOCKS

1. SCOPE

1.1 Scope. This method describes a procedure for BOF cable entry to FOCT and other equipment through MCPs integral to the equipment being entered using M24705/1 type insert blocks.

2. DOCUMENTS APPLICABLE TO METHOD 2H1

2.1 General. The documents listed in this section are specified in Method 2H1 of this standard. This section does not include documents cited in other sections of this standard or recommended for additional information or as examples. While every effort has been made to ensure the completeness of this list, document users are cautioned that they must meet all specified requirements of documents cited in Method 2H1 of this standard, whether or not they are listed.

2.2 Government documents.

2.2.1 Specifications, standards, and handbooks. The following specifications, standards, and handbooks form a part of this document to the extent specified herein. Unless otherwise specified, the issues of these documents are those cited in the solicitation or contract.

DEPARTMENT OF DEFENSE SPECIFICATIONS

MIL-DTL-24705/1 - Penetrators, Multiple Cable, Electric Cable, Rectangular Metal Frame, Square-Faced Blocks

(Copies of this document are available online at http://quicksearch.dla.mil/.)

2.3 Order of precedence. Unless otherwise noted herein or in the contract, in the event of a conflict between the text of this document and the references cited herein, the text of this document takes precedence. Nothing in this document, however, supersedes applicable laws and regulations unless a specific exemption has been obtained.

3. REQUIRED EQUIPMENT AND MATERIALS

3.1 Equipment and materials. The equipment and materials in table 2H1-I shall be used to perform this procedure. More detail on approved sources for items with reference numbers can be found on the Dahlgren shipboard fiber optics website (see 6.6). The list on which items appear is indicated by the two-letter prefix as follows:

a. TL = Recommended Tool List

b. TS = Recommended Test Equipment List

TABLE 2H1-I. Equipment and materials.

Reference #	Description	Quantity
TL-0071	Safety glasses	1
TL-0069	Ruler	1
	Tallow (Nelson AA0099, or equal [see 4.6])	As required
	Open end wrench, 9/16-inch	1
TL-0012	Cable jacket stripping tool	1
TL-0045	Aramid yarn shears	1
NOTE: Products to be considered for addition to the recommended tool or test equipment shall obtain approval as specified (see 6.5).		

4. PROCEDURE

4.1 Safety summary. The following safety precautions shall be observed:

a. Observe warnings and cautions on equipment and materials.

b. Do not look into the end of a BOF tube. Always wear approved safety glasses when handling BOF tubes that may be connected to a pressure source.

4.2 Procedure. The following steps shall be performed:

Step 1. Select MCP blocks in accordance with table 2H1-II.

TABLE 2H1-II. MCP data and insert block sizes for BOF cables.

Cable type	Single-tube	7-tube	7-tube	19-tube
Cable OD mm (in) nominal	11.125 (0.44)	29.0 (1.14)	31.5 (1.25)	50.8 (2.00)
Primary insert block P/N M24705/1-BN	2011	4029	4032	6050
Alternate insert block P/N M24705/1-BN	N/A	N/A	6032	6051
Blanking insert block P/N M24705/1-BN	20	40	40	60
Alternate blanking insert block P/N M24705/1-BN	N/A	N/A	60	N/A

Step 2. Measure the distance required to route the BOF tubes from the innermost portion of the MCP to the most distant corner of the interconnection box (or to the furcation or end sealing region in the end user equipment). Add approximately 130 millimeters (5 inches) to the distance and mark the BOF cable outer jacket.

Step 3. Remove the BOF cable outer jacket up to the mark using the cable jacket stripper. Cut off the cable aramid yarn strength members and waterblocking materials, if present, using the aramid yarn shears. If the required length of any of the BOF tubes is shorter than the exposed tube length, trim the tubes to the appropriate length.

NOTE: Make sure that the individual BOF tubes are not punctured, crushed, or kinked while trimming back the cable elements and the BOF tubes that will not be routed into the equipment.

Step 4. End seal the BOF tubes that will not be routed into the equipment using Method 2J1-1.

NOTE: This step may be performed after BOF cable insertion into the MCP if there is a problem inserting the BOF cable through the cable insert blocks with the BOF tubes end sealed.

Step 5. Clean the BOF cable jacket and the BOF tubes using a wipe dampened with alcohol and blow dry as necessary.

CAUTION: Do not exceed the following BOF cable and BOF tube minimum bend diameters:

a. BOF tube: 127 millimeters (5 inches)

b. 7-tube cable: 45 centimeters (17.7 inches)

c. 19-tube cable: 1 meter (39 inches)

Step 6. Feed the BOF cables into the interconnection box or the other equipment through the cable penetration opening.

Step 7. Liberally apply tallow to the inside and outside portion of the insert blocks, the inner portion of the MCP frame, and the sides of the wedgepack. Ensure that tallow is placed in the corners of the MCP frame.

NOTE: The wedgepack may be removed and disassembled to apply the tallow.

Step 8. Reinstall the wedgepack (if removed) and install the insert blocks on the BOF cables so that the outer jacket protrudes 13 millimeters (0.5 inch) to 25 millimeters (1 inch) inside the equipment. Install the cable insert blocks so that the gap between the insert block halves is parallel to the wedgepack. Install the insert blocks into the MCP frame so that the insert blocks are flush with the outside edge of the MCP frame. Fill all positions in the frame with insert blocks (either cable insert blocks or blanking [solid] insert blocks [see figure 2H1-1]).

NOTE: Incoming BOF cables may be installed on one end of the enclosure and outgoing cables on the opposite end for large enclosures. Where only one penetrator is used, incoming cables may be installed on one side of the wedgepack and outgoing cables on the opposite side.

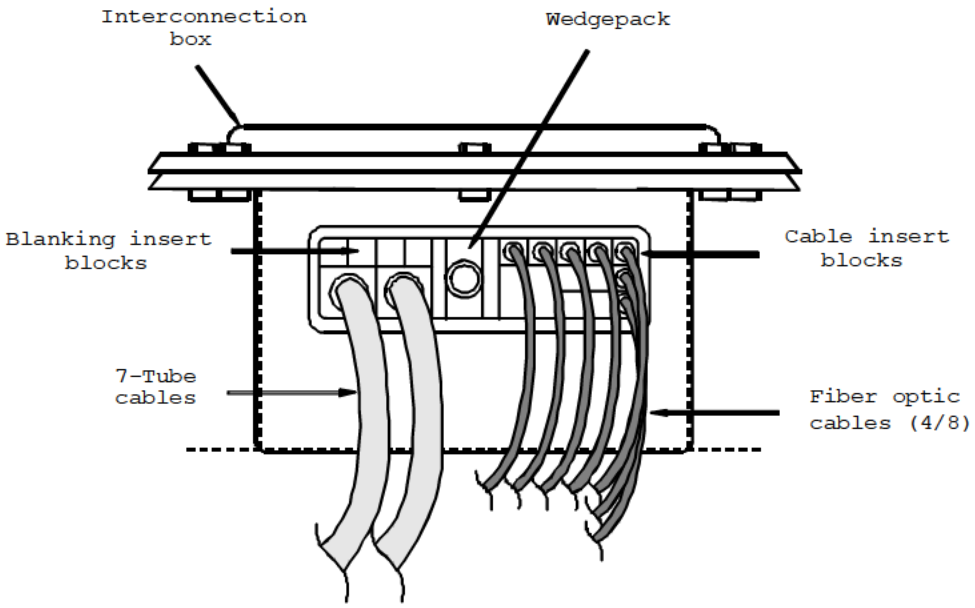

FIGURE 2H1-1. Interconnection box integral MCP (typical).

NOTE: BOF cables generally should be installed near the ends of the MCP so that the BOF tubes can be easily routed to the sides of the equipment.

Step 9. Tighten the nut on the wedgepack to compress the insert blocks in the frame using a wrench. Tighten the wedgepack nut until the outside wedgepack metal plate is almost flush with the bottom of the MCP frame and the insert blocks. Continue to tighten the wedgepack nut until a torque between 5.7 and 16.9 Newton-meters (50 and 150 inch-pounds) is reached.

NOTE: The wedgepack is fully tightened when the length of the pack is the same as the depth of the MCP frame.

Step 10. After the blocks have been compressed for approximately 24 hours, retighten the nut to ensure that the seal is maintained.

Step 11. If the BOF tubes will not be immediately formed and shaped within the equipment, close the equipment cover to keep dirt and moisture out of the BOF tubes.

METHOD 2H2
BOF CABLE ENTRANCE TO EQUIPMENT VIA INTEGRAL MCP WITH PEEL AWAY TYPE INSERT BLOCKS

1. SCOPE

1.1 Scope. This method describes a procedure for BOF cable entry to M24728/1, /2, and /3 FOICBs and other equipment through MCPs integral to the equipment being entered using peel away insert type blocks.

2. DOCUMENTS APPLICABLE TO METHOD 2H2

2.1 General. The documents listed in this section are specified in Method 2H2 of this standard. This section does not include documents cited in other sections of this standard or recommended for additional information or as examples. While every effort has been made to ensure the completeness of this list, document users are cautioned that they must meet all specified requirements of documents cited in Method 2H2 of this standard, whether or not they are listed.

2.2 Government documents.

2.2.1 Specifications, standards, and handbooks. The following specifications, standards, and handbooks form a part of this document to the extent specified herein. Unless otherwise specified, the issues of these documents are those cited in the solicitation or contract.

DEPARTMENT OF DEFENSE SPECIFICATIONS

MIL-I-24728/1	-	Interconnection Box, Fiber Optic, Submersible, 254 × 330 mm
MIL-I-24728/2	-	Interconnection Box, Fiber Optic, Submersible, 308.4 × 609.6 mm
MIL-I-24728/3	-	Interconnection Box, Fiber Optic, Submersible, 406.4 × 863.6 mm
MIL-PRF-85045/25	-	Cable, Fiber Optic, Seven Tube, Blown Optical Fiber, Standard and Enhanced Performance, Cable Configuration Type 5 (Tube), Application B (Shipboard), Cable Class SM and MM
MIL-PRF-85045/26	-	Cable, Fiber Optic, One Tube, Blown Optical Fiber, Standard and Enhanced Performance, Cable Configuration Type 5 (Tube), Application B (Shipboard), Cable Class SM and MM

(Copies of these documents are available online at http://quicksearch.dla.mil/.)

2.3 Order of precedence. Unless otherwise noted herein or in the contract, in the event of a conflict between the text of this document and the references cited herein, the text of this document takes precedence. Nothing in this document, however, supersedes applicable laws and regulations unless a specific exemption has been obtained.

3. REQUIRED EQUIPMENT AND MATERIALS

3.1 Equipment and materials. The equipment and materials in table 2H2-I shall be used to perform this procedure. More detail on approved sources for items with reference numbers can be found on the Dahlgren shipboard fiber optics website (see 6.6). The list on which items appear is indicated by the two-letter prefix as follows:

a. TL = Recommended Tool List

b. TS = Recommended Test Equipment List

TABLE 2H2-I. Equipment and materials.

Reference #	Description	Quantity
TL-0071	Safety glasses	1
TL-0069	Ruler	1
	Tallow (Nelson AA0099, or equal [see 4.6])	As required
	Peel away style insert blocks (Roxtec RM modules, or equal [see 4.6])	As required
	Wedgepack (Roxtec ARW0000601021, or equal [see 4.6])	1
	Open end wrench, 9/16-inch	1
TL-0012	Cable jacket stripping tool	1
TL-0045	Aramid yarn shears	1
NOTE: Products to be considered for addition to the recommended tool or test equipment shall obtain approval as specified (see 6.5).		

4. PROCEDURE

4.1 Safety summary. The following safety precautions shall be observed:

a. Observe warnings and cautions on equipment and materials.

b. Do not look into the end of a BOF tube. Always wear approved safety glasses when handling BOF tubes that may be connected to a pressure source.

4.2 Procedure. The following steps shall be performed:

Step 1. Select MCP blocks in accordance with table 2H2-II.

TABLE 2H2-II. MCP data and insert block sizes for BOF cables.

Cable type	M85045/26 Single tube	M85045/25 7-tube	
Cable OD mm (inch), nominal	11.1 (0.44)	29.0 (1.14)	31.5 (1.25)
Primary insert block P/N, (Roxtec P/N, or equal [see 4.6])	RM20w40	RM40 10-32	RM40 10-32
Peel away layers from each side, nominal. No core.	6	12	12

Step 2. Measure the distance required to route the BOF tubes from the innermost portion of the MCP to the most distant corner of the interconnection box (or to the furcation or end sealing region in the end user equipment). Add approximately 130 millimeters (5 inches) to the distance and mark the BOF cable outer jacket.

Step 3. Remove the BOF cable outer jacket up to the mark using the cable jacket stripper. Cut off the cable aramid yarn strength members and waterblocking materials, if present, using the aramid yarn shears. If the required length of any of the BOF tubes is shorter than the exposed tube length, trim the tubes to the appropriate length.

NOTE: Make sure that the individual BOF tubes are not punctured, crushed, or kinked while trimming back the cable elements and the BOF tubes that will not be routed into the equipment.

Step 4. End seal the BOF tubes that will not be routed into the equipment using Method 2J1-1.

NOTE: This step may be performed after BOF cable insertion into the MCP if there is a problem inserting the BOF cable through the cable insert blocks with the BOF tubes end sealed.

Step 5. Clean the BOF cable jacket and the BOF tubes using a wipe dampened with alcohol and blow dry as necessary.

CAUTION: Do not exceed the following BOF cable and BOF tube minimum bend diameters:

a. BOF tube: 127 millimeters (5 inches)

b. 7-tube cable: 45 centimeters (17.7 inches)

c. 19-tube cable: 1 meter (39 inches)

Step 6. Feed the BOF cables into the interconnection box or the other equipment through the cable penetration opening.

Step 7. Separate the block for each cable into two halves.

NOTE: If MCP insert blocks are being used to fill out the MCP space (i.e., not being used for active cable entrance), do not separate the block into two halves, remove the solid core, or remove any layers. These blocks can be used for future growth.

Step 8. Remove the black core and discard.

Step 9. Remove the recommended number of layers from each half of the insert block, as specified in table 2H2-II, and discard.

NOTE: Layers alternate colors (blue and black); each is considered a single layer.

NOTE: The recommended practice is to remove a single layer at a time.

NOTE: In the event that too many layers have been peeled away, do not try to reinsert layers. Discard material and begin again.

Step 10. Place the insert blocks around the cable.

NOTE: When each half is peeled away in accordance with table 2H2-II, a 0.1- to 1-millimeter (0.004- to 0.039-inch) gap should be present.

Step 11. Liberally apply tallow to the inside and outside portion of the insert blocks, the inner portion of the MCP frame, and the sides of the wedgepack. Make sure that tallow is placed in the corners of the MCP frame.

NOTE: The wedgepack may be removed and disassembled to apply the tallow.

Step 12. Reinstall the wedgepack (if removed) and install the insert blocks on the BOF cables so that the outer jacket protrudes 13 to 25 millimeters (0.5 to 1 inch) inside the equipment. Install the cable insert blocks so that the gap between the insert block halves is parallel to the wedgepack. Install the insert blocks into the MCP frame so that the insert blocks are flush with the outside edge of the MCP frame. Fill all positions in the frame with insert with either cable insert blocks or blanking (solid) insert blocks (see figure 2H2-1).

NOTE: Incoming BOF cables may be installed on one end of the enclosure and outgoing cables on the opposite end for large enclosures. Where only one penetrator is used, incoming cables may be installed on one side of the wedgepack and outgoing cables on the opposite side.

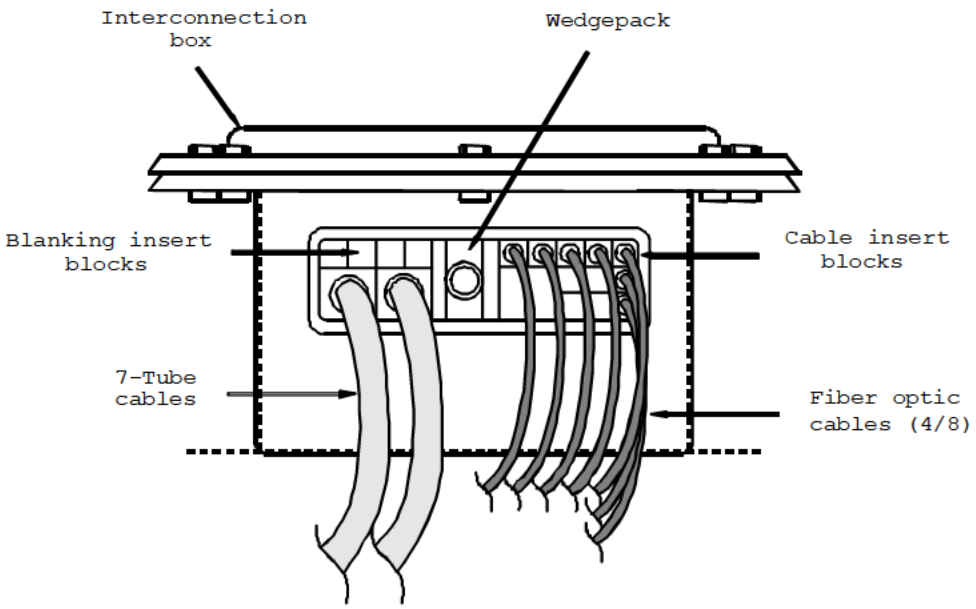

FIGURE 2H2-1. Interconnection box integral MCP (typical).

NOTE: BOF cables generally should be installed near the ends of the MCP so that the BOF tubes can be easily routed to the sides of the equipment.

Step 13. Tighten the nut on the wedgepack to compress the insert blocks in the frame using a wrench. Tighten the wedgepack nut until the outside wedgepack metal plate is almost flush with the bottom of the MCP frame and the insert blocks. Continue to tighten the wedgepack nut until a torque between 5.7 and 16.9 Newton-meters (50 and 150 inch-pounds) is reached.

NOTE: The wedgepack is fully tightened when the length of the pack is the same as the depth of the MCP frame.

Step 14. After the blocks have been compressed for approximately 24 hours, retighten the nut to ensure that the seal is maintained.

Step 15. If the BOF tubes will not be immediately formed and shaped within the equipment, close the equipment cover to keep dirt and moisture out of the BOF tubes.

METHOD 2H3
BOF CABLE ENTRANCE TO EQUIPMENT VIA M24705/4 FRAME MCP AND PEEL AWAY TYPE INSERT BLOCKS

1. SCOPE

1.1 Scope. This method describes a procedure for BOF cable entry to FOCT and other equipment through frame type MCPs inserted into the equipment being entered using frame type MCPs and peel away type insert blocks in accordance with MIL-DTL-24705/4. The method includes procedures for installation of the frame and blocks into an FOICB in accordance with MIL-DTL-24728/9 or MIL-DTL-24728/10. The inserted frame MCP approach is only approved for applications with spray-tight only requirements. If there are watertight requirements, an FOICB in accordance with MIL-I-24728/1, /2, or /3 with integrated MCP shall be used.

2. DOCUMENTS APPLICABLE TO METHOD 2H3

2.1 General. The documents listed in this section are specified in Method 2H3 of this standard. This section does not include documents cited in other sections of this standard or recommended for additional information or as examples. While every effort has been made to ensure the completeness of this list, document users are cautioned that they must meet all specified requirements of documents cited in Method 2H3 of this standard, whether or not they are listed.

2.2 Government documents.

2.2.1 Specifications, standards, and handbooks. The following specifications, standards, and handbooks form a part of this document to the extent specified herein. Unless otherwise specified, the issues of these documents are those cited in the solicitation or contract.

DEPARTMENT OF DEFENSE SPECIFICATIONS

MIL-DTL-24705/4	-	Penetrators, Multiple Cable, Compact Rectangular Metal Frame and Blocks, Electrical and Fiber Optic Cable
MIL-I-24728/1	-	Interconnection Box, Fiber Optic, Submersible, 254 × 330 mm
MIL-I-24728/2	-	Interconnection Box, Fiber Optic, Submersible, 308.4 × 609.6 mm
MIL-I-24728/3	-	Interconnection Box, Fiber Optic, Submersible, 406.4 × 863.6 mm
MIL-DTL-24728/9	-	Interconnection Box, Cable Routing, Fiber Optic, Spraytight, 712 × 1372 mm
MIL-DTL-24728/10	-	Interconnection Box, Cable Routing, Fiber Optic, Spraytight, 712 × 1017 mm
MIL-PRF-85045/25	-	Cable, Fiber Optic, Seven Tube, Blown Optical Fiber, Standard and Enhanced Performance, Cable Configuration Type 5 (Tube), Application B (Shipboard), Cable Class SM and MM
MIL-PRF-85045/26	-	Cable, Fiber Optic, One Tube, Blown Optical Fiber, Standard and Enhanced Performance, Cable Configuration Type 5 (Tube), Application B (Shipboard), Cable Class SM and MM

DEPARTMENT OF DEFENSE STANDARDS

MIL-STD-2042-5	-	Fiber Optic Cable Topology Installation Standard Methods for Surface Ships and Submarines (Connectors and Interconnections) Part 5 of 7 Parts)

(Copies of these documents are available online at http://quicksearch.dla.mil/.)

2.3 Order of precedence. Unless otherwise noted herein or in the contract, in the event of a conflict between the text of this document and the references cited herein, the text of this document takes precedence. Nothing in this document, however, supersedes applicable laws and regulations unless a specific exemption has been obtained.

3. REQUIRED EQUIPMENT AND MATERIALS

3.1 Equipment and materials. The equipment and materials in table 2H3-I shall be used to perform this procedure. More detail on approved sources for items with reference numbers can be found on the Dahlgren shipboard fiber optics website (see 6.6). The list on which items appear is indicated by the two-letter prefix, as follows:

a. TL = Recommended Tool List

b. TS = Recommended Test Equipment List

TABLE 2H3-I. Equipment and materials.

Reference #	Description	Quantity
TL-0071	Safety glasses	1
TL-0069	Ruler	1
	Tallow (Nelson AA0099, or equal [see 4.6])	As required
	M24705/4 insert blocks (Roxtec CM modules, or equal [see 4.6])	As required
	M24705/4-FA01 frame (Roxtec CF32 frame kit, or equal [see 4.6])	As required
	Socket wrench	1
	Metric hex key, 5-mm	1
TL-0012	Cable jacket stripping tool	1
TL-0045	Aramid yarn shears	1
NOTE: Products to be considered for addition to the recommended tool or test equipment shall obtain approval as specified (see 6.5).		

4. PROCEDURE

4.1 Safety summary. The following safety precautions shall be observed:

a. Observe warnings and cautions on equipment and materials.

b. Do not look into the end of a BOF tube. Always wear approved safety glasses when handling BOF tubes that may be connected to a pressure source.

4.2 Procedure. The following steps shall be performed:

Step 1. Insert the M24705/4-FA01 MCP frame from the outside of the FOICB. The gasket attached to the frame should seal against the FOICB.

Step 2. Insert the counterframe from the inside of the FOICB. The studs on the frame will protrude into the cabinet and will align with stud cutouts on the counterframe.

Step 3. Fasten the barrel nuts on the frame studs from the inside of the FOICB and tighten against the counterframe using a 5-millimeter metric hex key. Tighten all ten barrel nuts evenly.

NOTE: It is recommended that the six barrel nuts at the end of the counterframe be tightened first and the four barrel nuts in the middle of the counterframe be tightened last.

NOTE: Do not over-tighten the barrel nuts or the nuts may push the counterframe aside and will not seat properly.

Step 4. Select MCP blocks in accordance with table 2H3-II.

TABLE 2H3-II. MCP data and insert block sizes for BOF cables.

Cable type	**M85045/26 single-tube**	**M85045/25 7-tube**	
Cable OD mm (inch), nominal	11.1 (0.44)	29.0 (1.14)	31.5 (1.25)
Primary Insert Block P/N (Roxtec P/N, or equal [see 4.6])	M24705/4-BN20 (CM20w40)	M24705/4-BN40 (CM40 10-32)	M24705/4-BN40 (CM40 10-32)
Peel away layers from each side, nominal. No core.	6	12	12

Step 5. Measure the distance required to route the BOF tubes from the innermost portion of the MCP to the most distant corner of the tube routing section of the interconnection box. Add approximately 80 millimeters (3 inches) to the distance and mark the BOF cable outer jacket.

Step 6. Remove the BOF cable outer jacket up to the mark using the cable jacket stripper. Cut off the cable aramid yarn strength members and waterblocking materials, if present, using the aramid yarn shears. If the required length of any of the BOF tubes is shorter than the exposed tube length, trim the tubes to the appropriate length.

NOTE: Make sure that the individual BOF tubes are not punctured, crushed, or kinked while trimming back the cable elements and the BOF tubes that will not be routed into the equipment.

Step 7. End seal the BOF tubes that will not be routed into the equipment using Method 2J1-1.

NOTE: This step may be performed after BOF cable insertion into the MCP if there is a problem inserting the BOF cable through the cable insert blocks with the BOF tubes end sealed.

Step 8. Clean the BOF cable jacket and the BOF tubes using a wipe dampened with alcohol and blow dry as necessary.

CAUTION: Do not exceed the following BOF cable and BOF tube minimum bend diameters:

a. BOF tube: 127 millimeters (5 inches)

b. 7-tube cable: 45 centimeters (17.7 inches)

c. 19-tube cable: 1 meter (39 inches)

Step 9. Feed the BOF cables into the interconnection box or the other equipment through the cable penetration opening.

Step 10. Separate the block for each cable into two halves.

NOTE: If MCP insert blocks are being used to fill out the MCP space (i.e., not being used for active cable entrance), do not separate the block into two halves, remove the solid core, or remove any layers. These blocks can be used for future growth.

Step 11. Remove the black core and discard.

Step 12. Remove the recommended number of layers from each half of the M24705/4 block, as specified in table 2H3-II, and discard.

NOTE: Layers alternate colors (blue and black); each is considered a single layer.

NOTE: The recommended practice is to remove a single layer at a time.

NOTE: In the event that too many layers have been peeled away, do not try to reinsert layers. Discard material and begin again.

NOTE: When each half is peeled away in accordance with table 2H3-II, a 0.1- to 1-millimeter (0.004- to 0.039-inch) gap should be present.

Step 13. Liberally apply tallow to the inside and outside portion of the insert blocks, the inner portion of the MCP frame, and the sides of the compression device. Make sure that tallow is placed in the corners of the MCP frame.

Step 14. Place the insert blocks around the cable.

Step 15. Install the insert blocks on the cables so that the outer jacket protrudes 13 to 25 millimeters (0.5 to 1 inch) inside the equipment. Install the insert blocks into the MCP frame so that the insert blocks are flush against the face of the MCP frame. Fill all positions in the frame with insert blocks (either cable insert blocks or blanking [solid] insert blocks [see figure 2H3-1]).

NOTE: The blocks should be oriented such that the seam created by the two halves is perpendicular to the long side of the MCP frame (see figure 2H3-1).

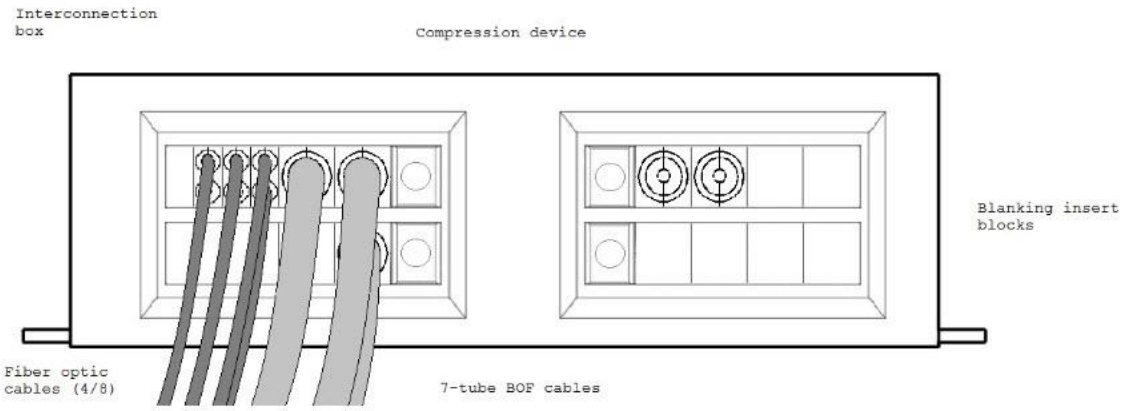

FIGURE 2H3-1. Interconnection box with M24705/4-FA01 frame type MCP (typical).

Step 16. Using the socket wrench, tighten the nut on the backside of one of the compression devices to compress the insert. Continue to tighten the compression device nut until a torque between 8 and 12 Newton-meters (70 and 106 inch-pounds) is reached.

Step 17. Repeat step 16 for the other compression device in the M24705/4-FA01 frame.

Step 18. Install terminations on the OFCCs in accordance with MIL-STD-2042-5 or perform one of the fusion splice methods in this standard.

METHOD 2I1
BOF CABLE FORMING, ROUTING, AND SHAPING WITHIN TRBs

1. SCOPE

1.1 Scope. This method describes the procedures for forming, routing, and shaping BOF tubes within TRBs.

2. DOCUMENTS APPLICABLE TO METHOD 2I1

2.1 General. The documents listed in this section are specified in Method 2I1 of this standard. This section does not include documents cited in other sections of this standard or recommended for additional information or as examples. While every effort has been made to ensure the completeness of this list, document users are cautioned that they must meet all specified requirements of documents cited in Method 2I1 of this standard, whether or not they are listed.

2.2 Government documents.

2.2.1 Specifications, standards, and handbooks. The following specifications, standards, and handbooks form a part of this document to the extent specified herein. Unless otherwise specified, the issues of these documents are those cited in the solicitation or contract.

COMMERCIAL ITEM DESCRIPTIONS

A-A-59731 - Tube Fittings, Blown Optical Fiber

DEPARTMENT OF DEFENSE SPECIFICATIONS

MIL-E-24142/6 - Enclosure, Submersible (15-Foot), Sizes 8 by 10 and through 14 by 26

MIL-E-24142/7 - Enclosures, Submersible (15-Foot), Size 20 by 24

(Copies of these documents are available online at http://quicksearch.dla.mil/.)

2.3 Non-Government publications. The following documents form a part of this document to the extent specified herein. Unless otherwise specified, the issues of these documents are those cited in the solicitation or contract.

SAE INTERNATIONAL

SAE-AS23190 - Wiring, Positioning, and Support Accessories

(Copies of this document are available online at www.sae.org.)

2.4 Order of precedence. Unless otherwise noted herein or in the contract, in the event of a conflict between the text of this document and the references cited herein, the text of this document takes precedence. Nothing in this document, however, supersedes applicable laws and regulations unless a specific exemption has been obtained.

3. REQUIRED EQUIPMENT AND MATERIALS

3.1 Equipment and materials. The equipment and materials in table 2I1-I shall be used to perform this procedure. More detail on approved sources for items with reference numbers can be found on the Dahlgren shipboard fiber optics website (see 6.6). The list on which items appear is indicated by the two-letter prefix as follows:

a. TL = Recommended Tool List

b. TS = Recommended Test Equipment List

TABLE 2I1-I. Equipment and materials.

Reference #	Description	Quantity
	BOF tubing (8 × 6 mm [0.315 × 0.236 inch])	As required
	Straight tube coupler (AA59731-U-8)	As required
	Tee tube coupler (AA59731-T-8 or AA59731-TS-8)	As required
TL-0130	Tube cutter	1
TL-069	Ruler	1
	Utility knife	1
TL-0129	Tube clip (Sumitomo DETC008, or equal [see 4.6]) or small plastic or metal bar	As required
	Hook-and-loop-type cable ties	As required
	Self-cinching straps (SAE-AS23190)	As required
	Distilled water	As required
TL-0013	Canned air	As required
NOTE: Products to be considered for addition to the recommended tool or test equipment shall obtain approval as specified (see 6.5).		

4. PROCEDURES

4.1 Safety summary. The following safety procedures shall be observed:

a. Observe warnings and cautions on equipment and materials.

b. Do not look into the end of a BOF tube. Always wear approved safety glasses when handling BOF tubes that may be connected to a pressure source.

4.2 Procedure. The following steps shall be performed:

NOTE: To the maximum extent practicable, TRBs should be sized to encourage BOF tube bend diameters greater than 450 millimeters (17.7 inches). BOF tube bend diameters less than 450 millimeters (17.7 inches) will negatively impact the blowing distances achievable for 12- and 18-fiber BOF bundles.

NOTE: When the number of tubes in a TRB is too large to make strict compliance with this procedure impractical, this procedure should be used as guidance.

NOTE: Keep BOF tube couplers and the ends of BOF tubes clean and free of contaminants.

NOTE: BOF tube couplers may be cleaned using distilled water and blown dry with air. Do not clean or soak BOF tube couplers in alcohol or other cleaning agents. BOF tube couplers can be permanently damaged by exposure to alcohol and cleaning agents. Tube shavings can be removed from the inside of tube couplers using a dry cotton swab.

NOTE: Previously used BOF tube couplers may not adequately seal to BOF tubes. When installing BOF cabling, always use new BOF tube couplers. Do not use couplers that have been used in prior ship installations. Using couplers that have been detached for repair or maintenance is permitted for reuse.

CAUTION: Do not disengage mated BOF tube fittings. Disengaging utilized BOF tube fittings may damage or break the optical fibers contained within the BOF tubes.

Step 1. Verify that the procedures of Method 2G1 or Method 2H1 have been completed for all BOF cables entering the TRB.

Step 2. Open the TRB cover and visually examine the BOF tubes for cuts or kinks before continuing. For M24142/6-012 and M24142/6-014 TRBs, proceed to step 3.a. For M24142/7-001 TRBs, skip to step 3.b.

CAUTION: Do not exceed a bend diameter of 13 centimeters (5 inches) for the BOF tubes. BOF tubes may collapse at diameters less than 13 centimeters (5 inches).

Step 3.a. For M24142/6 TRBs, choose a BOF cable and route BOF tube number one to the nearest side of the box. Route the BOF tube along the side and mark the tube 100 millimeters (4 inches) from the far corner of the box. Successively route and mark each BOF tube within the BOF cable (staggering each tube approximately 25 millimeters [1 inch] shorter than the previous tube is recommended). Using the tube cutter, cut each tube at the mark. Visually verify that the end of the tube is cut perpendicular to the tube length. Clean the end of each BOF tube with a wipe dampened with alcohol and blow dry as necessary. Proceed to step 4.

Step 3.b. For M24142/7 TRBs, choose a BOF cable and route BOF tube number one to the nearest side of the box. Route the BOF tube along the side and mark the tube 100 to 150 millimeters (4 to 6 inches) from the far corner of the box. Successively route and mark each BOF tube within the BOF cable (staggering each tube approximately 50 millimeters [2 inches] shorter than the previous tube is recommended). Using the tube cutter, cut each tube at the mark. Visually verify that the end of the tube is cut perpendicular to the tube length. Clean the end of each BOF tube with a wipe dampened with alcohol and blow dry as necessary. Proceed to step 4.

NOTE: BOF tube bend diameters less than 0.46 meters (18 inches) will negatively impact the blowing distances achievable for 12- and 18-fiber BOF bundles. Maximize BOF tube bend diameters to the maximum extent practicable.

Step 4. Slide the heat shrink tubing with the tube identification onto each BOF tube of the BOF cable approximately 100 millimeters (4 inches) from the tube end. Do not heat or shrink the shrink tubing.

Step 5. Form the BOF tubes into a flat group and route the group along the side of the box as follows (see figure 2I1-1):

a. Snap the BOF tubes into a 7-tube clip (if available). Place the longest BOF tube to the rear of the box with each successively shorter tube placed to the front of the previous tube (if the BOF tube lengths are staggered).

b. Route the group of BOF tubes along the side of the box, securing the group to the box mounting brackets (if available) using hook-and-loop-type cable ties.

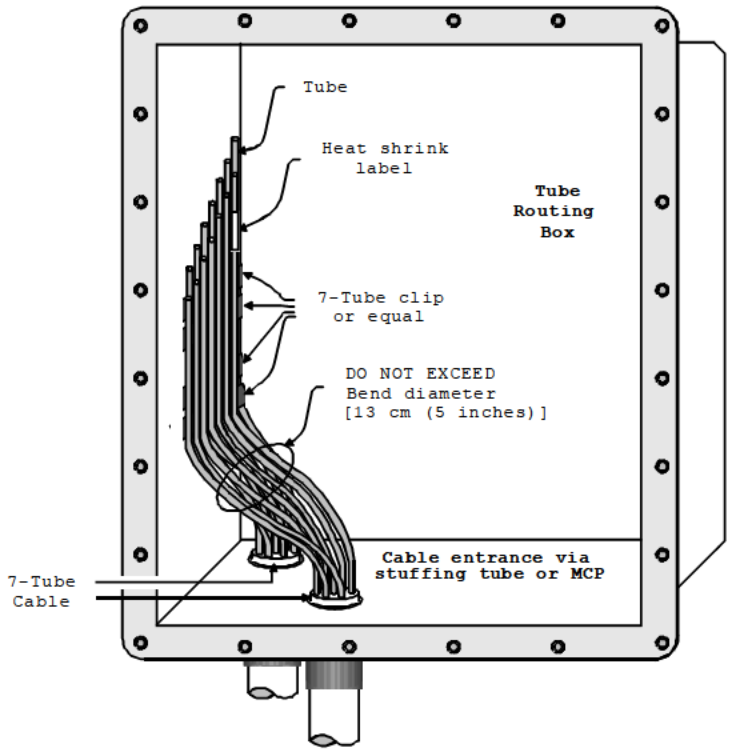

FIGURE 2I1-1. Routing BOF tubes in TRB.

Step 6. Repeat steps 3, 4, and 5 for each BOF cable entering the TRB.

NOTE: If the box size allows, the tubes of each successive BOF cable should be shortened approximately 50 millimeters (2 inches) compared to the previous BOF cable routed on the same side of the box.

NOTE: Spacers may be used to separate tube groups to facilitate access.

Step 7. Observe the tube connection chart or other approved drawing. Identify BOF tubes that will not be connected and end seal them in accordance with Method 2J1.

Step 8. Slide a straight tube coupler or a tee tube coupler onto the tube and firmly seat the tube coupler on the tube.

NOTE: Before assembling the tube coupler onto the tube, clean the end of each BOF tube with a wipe dampened with alcohol and blow dry as necessary.

NOTE: Refer to the connection chart or other approved drawing to determine where to use straight tube couplers and where to use tee tube couplers.

NOTE: When a tee tube coupler is used, the tee connection is end sealed in accordance with Method 2J1 after conduct of the tube sealing integrity test.

Step 9. Identify two BOF tubes to be interconnected, plan the path of the interconnecting jumper tube (see figure 2I1-2 and notes below), and determine the length of the required jumper tube. Using the tube cutter, cut a piece of BOF tubing to the required length. Visually verify that the end of the tube is cut perpendicular to the tube length. Clean each end of the BOF tube with a wipe dampened with alcohol and blow dry as necessary.

NOTE: The path of the jumper tube shall follow the exterior of the TRB to the greatest extent possible.

NOTE: When the two tubes to be interconnected are located on the same side of the TRB, a figure-eight or looping type of path shall be used (see figure 2I1-2).

NOTE: When the two tubes to be interconnected are located on opposite sides of the TRB, there shall not be a straight and direct connection between the tubes. The jumper tubing shall loop at least once when connecting the tubes.

CAUTION: Do not exceed a bend diameter of 13 centimeters (5 inches) for the BOF tubes. BOF tubes may collapse at diameters less than 13 centimeters (5 inches).

Step 10. Form the jumper tube along the planned path. Slide the jumper tube into the tube coupler of each of the two BOF tubes to be interconnected. Firmly seat the jumper tube into each tube coupler. Apply an axial load of approximately 22 Newtons (5 pounds) between the BOF tubes and the jumper tube to verify that they are properly engaged into the tube couplers. Secure the jumper tube to the box mounting brackets (if available) using hook-and-loop type cable ties or self-cinching straps.

NOTE: Small BOF tube bend diameters may not allow 12- and 18-fiber BOF bundles to be blown through the TRB. Maximize BOF tube bend diameters to the greatest extent practicable.

NOTE: BOF tube bend diameters less than 0.46 meters (18 inches) will negatively impact the blowing distances achievable for 12- and 18-fiber BOF bundles.

NOTE: BOF tube loops with a diameter larger than the TRB may be utilized during fiber installation to improve blowing performance. During the blowing operation, the BOF tubes may be extended outside of the TRB. After the blowing operation, the large loop can be collapsed into multiple smaller loops for stowage within the TRB. An additional tube coupler may be placed in the middle of the large loop to facilitate collapse of the large loop into multiple smaller loops.

Step 11. Repeat steps 9 and 10 until all required tube interconnections have been accomplished.

Step 12. Close and secure the TRB cover.

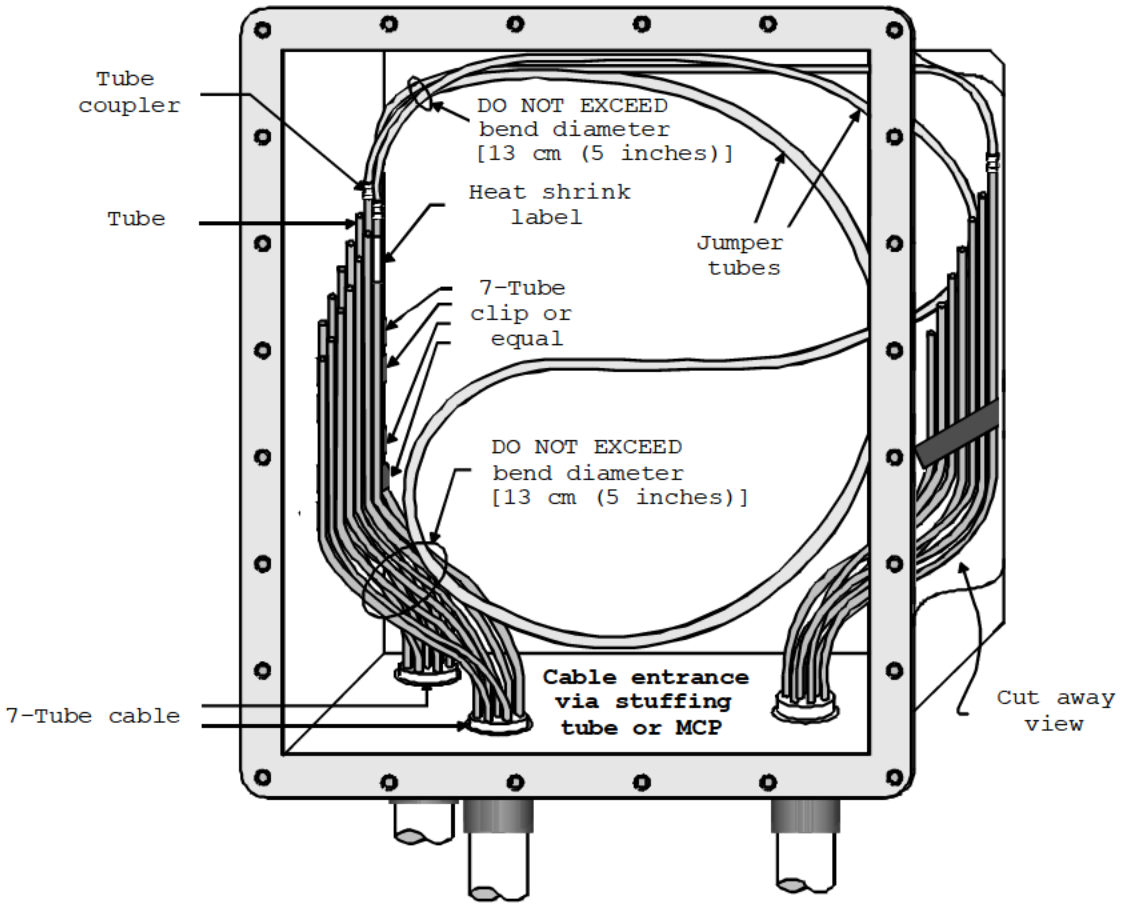

FIGURE 2I1-2. Typical jumper tube paths.

METHOD 2I2
BOF CABLE FORMING, ROUTING, AND SHAPING FOR M24728/1, /2, AND /3 FOICBs

1. SCOPE

1.1 Scope. This method describes the procedures for forming, routing and shaping BOF tubes within M24728/1, /2, and /3 interconnection boxes.

2. DOCUMENTS APPLICABLE TO METHOD 2I2

2.1 General. The documents listed in this section are specified in Method 2I2 of this standard. This section does not include documents cited in other sections of this standard or recommended for additional information or as examples. While every effort has been made to ensure the completeness of this list, document users are cautioned that they must meet all specified requirements of documents cited in Method 2I2 of this standard, whether or not they are listed.

2.2 Government documents.

2.2.1 Specifications, standards, and handbooks. The following specifications, standards, and handbooks form a part of this document to the extent specified herein. Unless otherwise specified, the issues of these documents are those cited in the solicitation or contract.

COMMERCIAL ITEM DESCRIPTIONS

A-A-59731 - Tube Fittings, Blown Optical Fiber

DEPARTMENT OF DEFENSE SPECIFICATIONS

MIL-I-24728/1 - Interconnection Box, Fiber Optic, Submersible, 254 × 330 mm

MIL-I-24728/2 - Interconnection Box, Fiber Optic, Submersible, 308.4 × 609.6 mm

MIL-I-24728/3 - Interconnection Box, Fiber Optic, Submersible, 406.4 × 863.6 mm

DEPARTMENT OF DEFENSE STANDARDS

MIL-STD-2042-6 - Fiber Optic Cable Topology Installation Standard Methods for Surface Ships and Submarines (Tests) (Part 6 of 7 Parts)

(Copies of these documents are available online at http://quicksearch.dla.mil/.)

2.3 Non-Government publications. The following documents form a part of this document to the extent specified herein. Unless otherwise specified, the issues of these documents are those cited in the solicitation or contract.

SAE INTERNATIONAL

SAE-AMS-DTL-23053/5 - Insulation Sleeving, Electrical, Heat Shrinkable, Polyolefin, Flexible, Crosslinked

SAE-AS23190 - Wiring, Positioning, and Support Accessories

(Copies of this document are available online at www.sae.org.)

2.4 Order of precedence. Unless otherwise noted herein or in the contract, in the event of a conflict between the text of this document and the references cited herein, the text of this document takes precedence. Nothing in this document, however, supersedes applicable laws and regulations unless a specific exemption has been obtained.

3. REQUIRED EQUIPMENT AND MATERIALS

3.1 Equipment and materials. The equipment and materials in table 2I2-I shall be used to perform this procedure. More detail on approved sources for items with reference numbers can be found on the Dahlgren shipboard fiber optics website (see 6.6). The list on which items appear is indicated by the two-letter prefix as follows:

a. TL = Recommended Tool List

b. TS = Recommended Test Equipment List

TABLE 2I2-I. Equipment and materials.

Reference #	Description	Quantity
	Tube coupler (AA59731-U-8)	As required
TL-0130	Tube cutter	1
TL-0069	Ruler	1
	Utility knife	1
	Heat shrink tubing (SAE-AMS-DTL-23053/5)	As required
	Hook-and-loop type cable ties	As required
TL-0129	Tube clip (Sumitomo DETC008, or equal [see 4.6]) or small plastic or metal bar	As required
	Self-cinching straps (SAE-AS23190)	As required
	Open end wrench, 9/16-inch	1
	Distilled water	As required
TL-0013	Canned air	As required
NOTE: Products to be considered for addition to the recommended tool or test equipment shall obtain approval as specified (see 6.5).		

4. PROCEDURES

4.1 Safety summary. The following safety procedures shall be observed:

a. Observe warnings and cautions on equipment and materials.

b. Do not look into the end of a BOF tube. Always wear approved safety glasses when handling BOF tubes that may be connected to a pressure source.

4.2 Procedure. The following steps shall be performed:

NOTE: Keep BOF tube couplers and the ends of BOF tubes clean and free of contaminants.

NOTE: BOF tube couplers may be cleaned using distilled water and blown dry with air. Do not clean or soak BOF tube couplers in alcohol or other cleaning agents. BOF tube couplers can be permanently damaged by exposure to alcohol and cleaning agents. Tube shavings can be removed from the inside of tube couplers using a dry cotton swab.

NOTE: Previously used BOF tube couplers may not adequately seal to BOF tubes. When installing BOF cabling, always use new BOF tube couplers.

CAUTION: Do not disengage mated BOF tube fittings unless authorized. Disengaging utilized BOF tube fittings may damage or break the optical fibers contained within the BOF tubes.

Step 1. Verify that the procedures of Method 2G1 or Method 2H1 have been completed for all BOF cables entering the interconnection box.

Step 2. Open the equipment cover and visually examine the BOF tubes for cuts or kinks before continuing.

CAUTION: Do not exceed a bend diameter of 13 centimeters (5 inches) for the BOF tubes. BOF tubes may collapse at diameters less than 13 centimeters (5 inches).

Step 3. Choose a BOF cable and route BOF tube number one to the nearest side of the box. Route the BOF tube along the side and mark the tube approximately 200 millimeters (8 inches) from the far corner of the box. Successively route and mark each BOF tube within the BOF cable (staggering each tube approximately 50-millimeters [2 inches] shorter than the previous tube is recommended). Using the tube cutter, cut each tube at the mark. Visually verify that the end of the tube is cut perpendicular to the tube length. Clean the end of each BOF tube with a wipe dampened with alcohol and blow dry as necessary.

NOTE: The dimensions of the M24728/1 interconnection box will not support the 50-millimeter (2-inch) per tube cut back recommended above. For M24728/1 installations, stagger the tubes to the furthest extent allowed by the dimensions of the box. Maintain at least 76 millimeters (3 inches) of length from box entry for the shortest tube in the stagger.

NOTE: Small BOF tube bend diameters may not allow 12- and 18-fiber BOF bundles to be blown through the tube bend. Maximize BOF tube bend diameters to the greatest extent practicable.

NOTE: BOF tube bend diameters less than 45.75 centimeters (18 inches) will negatively impact the blowing distances achievable for 12- and 18-fiber BOF bundles.

Step 4. Slide the heat shrink tubing with the tube identification onto each BOF tube of the BOF cable approximately 100 millimeters (4 inches) from the tube end. Do not heat-shrink the tubing.

Step 5. Form the BOF tubes into a flat group and route the group along the side of the box as follows (see figure 2I2-1):

a. Place the longest BOF tube to the rear of the box with each successively shorter tube placed to the front of the previous tube (if the BOF tube lengths are staggered).

b. Route the group of BOF tubes along the side of the box, securing the group to the box mounting brackets using hook-and-loop-type cable ties or self-cinching straps.

Step 6. Repeat steps 3, 4, and 5 for each BOF cable entering the interconnection box.

NOTE: If the box size allows, the tubes of each successive BOF cable should be shortened approximately 50 millimeters (2 inches) compared to the previous BOF cable routed on the same side of the box.

NOTE: Spacers may be used to separate tube groups to facilitate access.

Step 7. Observe the connection chart or other approved drawing. Identify BOF tubes that will not have fibers installed and end seal them in accordance with Method 2J1.

Step 8. Identify those BOF tubes that are to have fibers installed and install fibers into them in accordance with the manufacturer's instructions.

Step 9. For each BOF tube containing fibers, perform one of the following:

a. Install a tube furcation unit onto the tube in accordance with Method 2F1.

b. Perform an 8- to 5-millimeter BOF tube transition in accordance with Method 2L1.

Step 10. Form and shape the optical fiber cables, furcation unit's loose tube furcation cables, and 5-millimeter BOF tubes within the interconnection box in accordance with Method 2C1.

Step 11. For each BOF tube containing fibers, verify the integrity of the end seals in accordance with MIL-STD-2042-6, Method 6J1.

Step 12. Close the equipment cover.

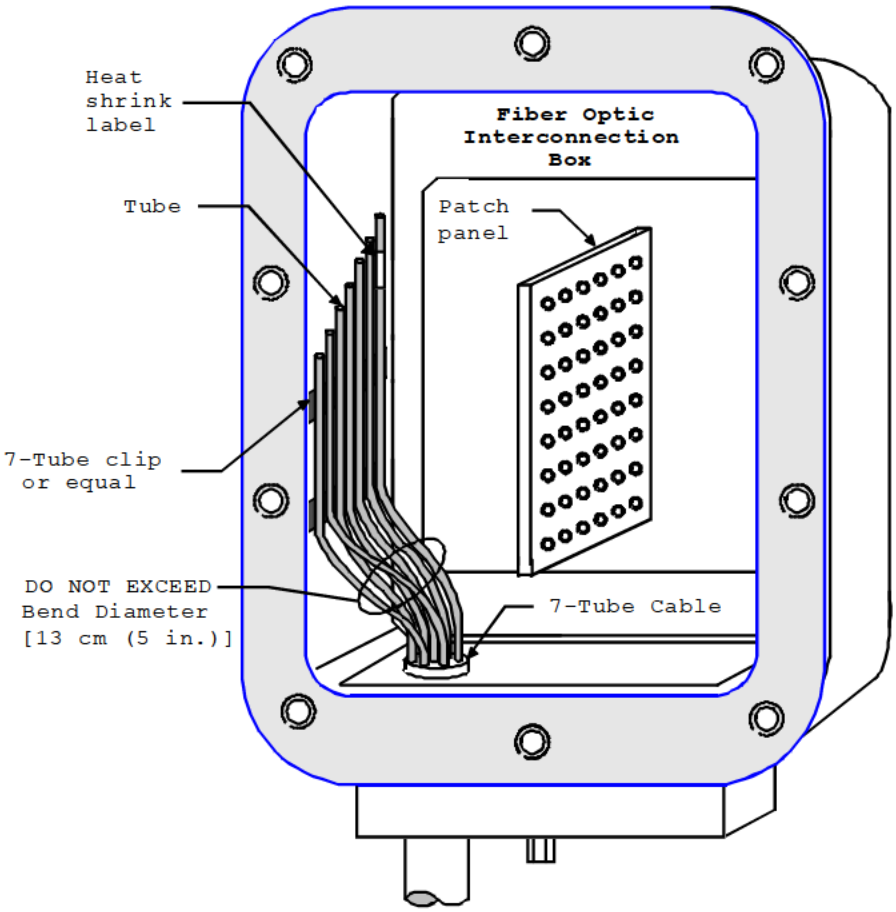

FIGURE 2I2-1. Routing BOF tubes in an FOICB.

METHOD 2I3
BOF CABLE FORMING, ROUTING, AND SHAPING WITHIN M24728/9 AND /10 FOICBs

1. SCOPE

1.1 Scope. The M24728/9 and /10 FOICBs are dual-purpose boxes with a section intended for tube routing and a section intended for fiber optic interconnections (e.g., fiber optic cable patching or splicing). This method describes the procedures for forming, routing, and shaping 8-millimeter BOF tubes within these FOICBs.

2. DOCUMENTS APPLICABLE TO METHOD 2I3

2.1 General. The documents listed in this section are specified in Method 2I3 of this standard. This section does not include documents cited in other sections of this standard or recommended for additional information or as examples. While every effort has been made to ensure the completeness of this list, document users are cautioned that they must meet all specified requirements of documents cited in Method 2I3 of this standard, whether or not they are listed.

2.2 Government documents.

2.2.1 Specifications, standards, and handbooks. The following specifications, standards, and handbooks form a part of this document to the extent specified herein. Unless otherwise specified, the issues of these documents are those cited in the solicitation or contract.

COMMERCIAL ITEM DESCRIPTIONS

A-A-59731 - Tube Fittings, Blown Optical Fiber

DEPARTMENT OF DEFENSE SPECIFICATIONS

MIL-DTL-24728/9 - Interconnection Box, Cable Routing, Fiber Optic, Spraytight, 712 × 1372 mm

MIL-DTL-24728/10 - Interconnection Box, Cable Routing, Fiber Optic, Spraytight, 712 × 1017 mm

(Copies of these documents are available online at http://quicksearch.dla.mil/.)

2.3 Non-Government publications. The following documents form a part of this document to the extent specified herein. Unless otherwise specified, the issues of these documents are those cited in the solicitation or contract.

SAE INTERNATIONAL

SAE-DTL-23053/5 - Insulation Sleeving, Electrical, Heat Shrinkable, Polyolefin, Flexible, Crosslinked

SAE-AS23190 - Wiring, Positioning, and Support Accessories

(Copies of these documents are available online at www.sae.org.)

2.4 Order of precedence. Unless otherwise noted herein or in the contract, in the event of a conflict between the text of this document and the references cited herein, the text of this document takes precedence. Nothing in this document, however, supersedes applicable laws and regulations unless a specific exemption has been obtained.

3. REQUIRED EQUIPMENT AND MATERIALS

3.1 Equipment and materials. The equipment and materials in table 2I3-I shall be used to perform this procedure. More detail on approved sources for items with reference numbers can be found on the Dahlgren shipboard fiber optics website (see 6.6). The list on which items appear is indicated by the two-letter prefix as follows:

a. TL = Recommended Tool List

b. TS = Recommended Test Equipment List

TABLE 2I3-I. Equipment and materials.

Reference #	Description	Quantity
	BOF tubing (8 × 6 mm [0.315 × 0.236 inch]) (General Cable P/N 705610, or equal [see 4.6])	As required
	Straight tube coupler (AA59731-U-8 or AA59731-U-8E)	As required
	Tee tube coupler (AA59731-T-8)	As required
TL-0130	Tube cutter	1
TL-0069	Ruler	1
	Utility knife	1
	Heat shrink tubing (SAE-DTL-23053/5)	As required
	Hook-and-loop type cable ties	As required
	Self-cinching straps (SAE-AS23190)	As required
	Distilled water	As required
TL-0013	Canned air	As required
NOTE: Products to be considered for addition to the recommended tool or test equipment shall obtain approval as specified (see 6.5).		

4. PROCEDURES

4.1 Safety summary. The following safety procedures shall be observed:

a. Observe warnings and cautions on equipment and materials.

b. Do not look into the end of a BOF tube. Always wear approved safety glasses when handling BOF tubes that may be connected to a pressure source.

4.2 Procedure. The following steps shall be performed:

Step 1. Verify that the procedures of Method 2H3 have been completed.

NOTE: Keep BOF tube couplers and the ends of BOF tubes clean and free of contaminants.

NOTE: BOF tube couplers may be cleaned using distilled water and blown dry with air. Do not clean or soak BOF tube couplers in alcohol or other cleaning agents. BOF tube couplers can be permanently damaged by exposure to alcohol and cleaning agents.

NOTE: Previously used BOF tube couplers may not adequately seal to BOF tubes. When installing BOF cabling, always use new BOF tube couplers.

CAUTION: Do not disengage mated BOF tube couplers. Disengaging utilized BOF tube couplers may damage or break the optical fibers contained within the BOF tubes.

Step 2. Open the FOICB cover and visually examine the BOF tubes for cuts or kinks before continuing.

Step 3. For the M24728/10 FOICB, proceed to step 4. For the M24728/9 FOICB, choose a BOF cable and route the center tube of the BOF cable to the nearest side of the tube routing section of the box. Route the BOF tube along the side and mark the tube 100 to 150 millimeters (4 to 6 inches) from the far corner of the box (see figure 2I3-1). Proceed to step 5.

CAUTION: Do not exceed a bend diameter of 13 centimeters (5 inches) for the 8-millimeter BOF tubes. BOF tubes may collapse at diameters less than 13 centimeters (5 inches).

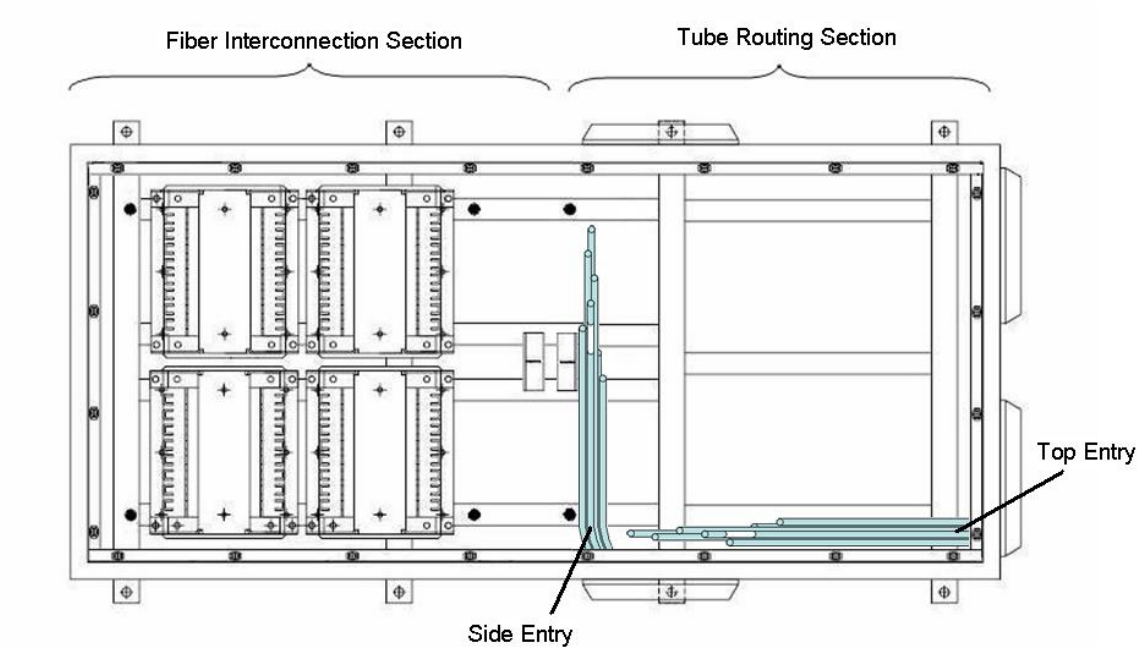

FIGURE 2I3-1. M24728/9 fiber optic interconnection box.

Step 4. For the M24728/10 FOICB:

a. BOF cables entering FOICB from side of box: Choose a BOF cable and route the center tube (tube 1) of the BOF cable to the nearest side of the tube routing section of the box. Route the BOF tube along the side and mark the tube 100 to 150 millimeters (4 to 6 inches) from the far corner of the box.

b. BOF cables entering FOICB from top of box: Choose a BOF cable and route the center tube (tube 1) of the BOF cable to the nearest side of the tube routing section of the box, along the side and making a turn at the opposite side of the tube routing section. Continue routing the tube along the opposite side of the tube routing section and mark the tube 100 to 150 millimeters (4 to 6 inches) from the diagonal side of the box.

CAUTION: Do not exceed a bend diameter of 13 centimeters (5 inches) for the 8-millimeter BOF tubes. BOF tubes may collapse at diameters less than 13 centimeters (5 inches).

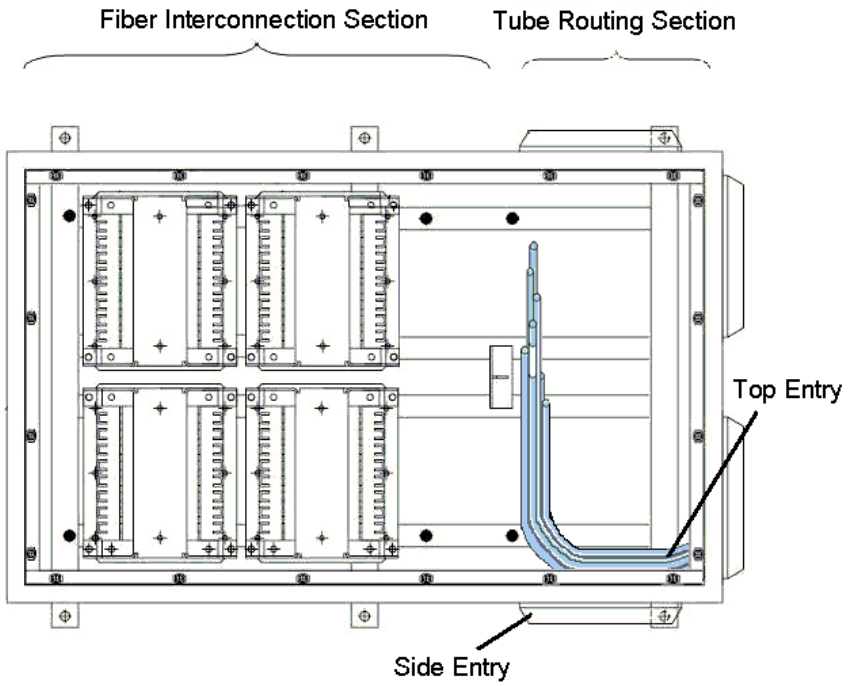

FIGURE 2I3-2. M24728/10 fiber optic interconnection box.

Step 5. Successively route and mark each of the remaining BOF tube within the BOF cable (staggering each tube approximately 50 millimeters [2 inches] shorter than the previous tube is recommended). Using the tube cutter, cut each tube at the mark. Visually verify that the end of the tube is cut perpendicular to the tube length. Clean the end of each BOF tube with a wipe dampened with alcohol and blow dry as necessary.

Step 6. Form the BOF tubes into a group and route along the side(s) of the tube routing section of the box, securing the group to the box mounting brackets or rails (if available) using hook-and-loop-type cable ties or self-cinching straps.

Step 7. Repeat steps 3 through 6 for each BOF cable entering the FOICB.

Step 8. Observe the tube connection chart or other approved drawing. Identify BOF tubes that will not be connected and end seal them in accordance with Method 2J1.

Step 9. Slide an 8-millimeter (0.315-inch) straight tube coupler, an 8-millimeter (0.315-inch) tee tube coupler, or an 8- to 5-millimeter (0.315 to 0.197-inch) reducer tube coupler onto the tube and firmly seat the tube coupler on the tube.

a. For instances where an 8- to 5-millimeter (0.315 to 0.197-inch) reducer tube coupler is used, see Method 2L1.

b. For all locations where a tee tube coupler is used, see step 5 of Method 2J1.

Step 10. Perform steps 9 and 10 of Method 2I1 until all required tube interconnections have been accomplished.

NOTE: Available tubes (i.e., those tubes not in use) should be positioned so that they are as easily acceptable as possible whereas completed tube interconnections should be stowed behind tubes not in use.

Step 11. Close and secure the FOICB cover.

METHOD 2J1
BOF TUBE END SEALING

1. SCOPE

1.1 Scope. This method describes the procedures for sealing the ends of empty BOF tubes in TRBs, FOICBs, and equipment.

2. DOCUMENTS APPLICABLE TO METHOD 2J1

2.1 General. The documents listed in this section are specified in Method 2J1 of this standard. This section does not include documents cited in other sections of this standard or recommended for additional information or as examples. While every effort has been made to ensure the completeness of this list, document users are cautioned that they must meet all specified requirements of documents cited in Method 2J1 of this standard, whether or not they are listed.

2.2 Government documents.

2.2.1 Specifications, standards, and handbooks. The following specifications, standards, and handbooks form a part of this document to the extent specified herein. Unless otherwise specified, the issues of these documents are those cited in the solicitation or contract.

COMMERCIAL ITEM DESCRIPTIONS

A-A-59278 - Oscilloscope (Digital Storage, 1 GHZ)

A-A-59731 - Tube Fittings, Blown Optical Fiber

DEPARTMENT OF DEFENSE STANDARDS

MIL-STD-2042-6 - Fiber Optic Cable Topology Installation Standard Methods for Surface Ships and Submarines (Tests) (Part 6 of 7 Parts)

(Copies of these documents are available online at http://quicksearch.dla.mil/.)

2.3 Order of precedence. Unless otherwise noted herein or in the contract, in the event of a conflict between the text of this document and the references cited herein, the text of this document takes precedence. Nothing in this document, however, supersedes applicable laws and regulations unless a specific exemption has been obtained.

3. REQUIRED EQUIPMENT AND MATERIALS

3.1 Equipment and materials. The equipment and materials in table 2J1-I shall be used to perform this procedure. More detail on approved sources for items with reference numbers can be found on the Dahlgren shipboard fiber optics website (see 6.6). The list on which items appear is indicated by the two-letter prefix as follows:

a. TL = Recommended Tool List

b. TS = Recommended Test Equipment List

TABLE 2J1-I. Equipment and materials.

Reference #	Description	Quantity
TL-0071	Safety glasses	1
	Tube coupler (AA59731-U-8)	As required
	Tube coupler plug (AA59278-TFP-8)	As required
	Tube end cap (AA59731-EC-8)	As required
	Tube coupler retention clip (John Guest P/N PM1808R, or equal [see 4.6])	As required
TL-0002 or TL-0044	Isopropyl alcohol, 99% pure anhydrous or alcohol pad, sealed	1
TL-0016	Wipes (if not using pre-wetted alcohol pads)	As required
	Distilled water	As required
TL-0013	Canned air	As required
NOTE: Products to be considered for addition to the recommended tool or test equipment shall obtain approval as specified (see 6.5).		

4. PROCEDURES

4.1 Safety summary. The following safety procedures shall be observed:

a. Observe warnings and cautions on equipment and materials.

b. Do not look into the end of a BOF tube. Always wear approved safety glasses when handling BOF tubes that may be connected to a pressure source.

4.2 Procedure. The following steps shall be performed:

NOTE: Keep BOF tube couplers and the ends of BOF tubes clean and free of contaminants.

NOTE: BOF tube couplers may be cleaned using distilled water and blown dry with air. Do not clean or soak BOF tube couplers in alcohol or other cleaning agents. BOF tube couplers can be permanently damaged by exposure to alcohol and cleaning agents.

NOTE: Previously used BOF tube couplers may not adequately seal to BOF tubes. When installing BOF cabling, always use new BOF tube couplers.

Step 1. Verify that the procedures of Method 2I1, Method 2I2, or Method 2I3 have been completed.

Step 2. Determine whether the other end of the BOF tube has been end sealed in accordance with this method. If the other end of the BOF tube has been end sealed, verify the integrity of the end seal in accordance with MIL-STD-2042-6, Method 6J1.

Step 3. Perform one of the following steps:

a. For straight tube couplers: Clean the end of the BOF tube with a wipe dampened with alcohol and blow dry as necessary. Slide a tube coupler onto the BOF tube and firmly seat it. Clean the tube coupler plug with a wipe dampened with alcohol and blow dry as necessary. Insert the tube coupler plug in the other end of the tube coupler and firmly seat it within the tube coupler. Apply an axial load of approximately 22 Newtons (5 pounds) between the BOF tube and the tube coupler plug to verify that they are properly engaged into the tube coupler.

b. For tube end caps: Clean the end of the BOF tube with a wipe dampened with alcohol and blow dry as necessary. Slide a tube end cap onto the BOF tube and firmly seat it. Apply an axial load of approximately 22 Newtons (5 pounds) between the BOF tube and the tube end cap to verify that the BOF tube is properly engaged into the tube end cap.

c. For tee tube couplers: Clean the end of the BOF tube with a wipe dampened with alcohol and blow dry as necessary. Slide a tee tube coupler onto the BOF tube and firmly seat it. Clean two tube coupler plugs with a wipe dampened with alcohol and blow dry as necessary. Insert one tube coupler plug in the tee side of the tee tube coupler and firmly seat it within the tube coupler. Apply an axial load of approximately 22 Newtons (5 pounds) between the BOF tube and the tube coupler plug to verify that they are properly engaged into the tube coupler. Insert the other tube coupler plug into the remaining open end of the tube coupler and firmly seat it within the tube coupler. Apply an axial load of approximately 22 Newtons (5 pounds) between the BOF tube and the tube coupler plug to verify that they are properly engaged into the tube coupler.

METHOD 2K1
FUSION SPLICE TRAY ROUTING, SHAPING, AND FORMING FOR M24728/8-51 7-INCH TRAY, FIBERGLASS TAPE ATTACHMENT

1. SCOPE

1.1 Scope. This method describes the procedure for the forming, shaping, and fusion splicing of two optical fibers within an M24728/8-51 fusion splice tray using a fusion splicer approved to A-A-59799.

1.2 Method dependencies. During execution of this method the user will, at certain points, need to complete MIL-STD-2042-5, Method 5C2. If the user is printing this method for reference, it is recommended to print Method 5C2 as well.

2. DOCUMENTS APPLICABLE TO METHOD 2K1

2.1 General. The documents listed in this section are specified in Method 2K1 of this standard. This section does not include documents cited in other sections of this standard or recommended for additional information or as examples. While every effort has been made to ensure the completeness of this list, document users are cautioned that they must meet all specified requirements of documents cited in Method 2K1 of this standard, whether or not they are listed.

2.2 Government documents.

2.2.1 Specifications, standards, and handbooks. The following specifications, standards, and handbooks form a part of this document to the extent specified herein. Unless otherwise specified, the issues of these documents are those cited in the solicitation or contract.

COMMERCIAL ITEM DESCRIPTIONS

A-A-59799 - Fusion Splicer and Cleaver, Optical Fiber

DEPARTMENT OF DEFENSE SPECIFICATIONS

MIL-I-19166 - Insulation Tape, Electrical, High-Temperature, Glass Fiber, Pressure-Sensitive

MIL-DTL-24728/8 - Interconnecting Box, Fiber Optic, Fusion Splice Tray and Holder Module

DEPARTMENT OF DEFENSE STANDARDS

MIL-STD-2042-5 - Fiber Optic Cable Topology Installation, Standard Methods for Surface Ships and Submarines (Connectors and Interconnections) (Part 5 of 7 Parts)

(Copies of these documents are available online at http://quicksearch.dla.mil/.)

2.3 Non-Government publications. The following documents form a part of this document to the extent specified herein. Unless otherwise specified, the issues of these documents are those cited in the solicitation or contract.

SAE INTERNATIONAL

SAE-AS23190 - Wiring, Positioning, and Support Accessories

(Copies of this document are available online at www.sae.org.)

2.4 Order of precedence. Unless otherwise noted herein or in the contract, in the event of a conflict between the text of this document and the references cited herein, the text of this document takes precedence. Nothing in this document, however, supersedes applicable laws and regulations unless a specific exemption has been obtained.

3. REQUIRED EQUIPMENT AND MATERIALS

3.1 Equipment and materials. The equipment and materials in table 2K1-I shall be used to perform this procedure. More detail on approved sources for items with reference numbers can be found on the Dahlgren shipboard fiber optics website (see 6.6). The list on which items appear is indicated by the two-letter prefix as follows:

a. TL = Recommended Tool List

b. TS = Recommended Test Equipment List

TABLE 2K1-I. Equipment and materials.

Reference #	Description	Quantity
TL-0002 or TL-0044	Isopropyl alcohol, 99% pure anhydrous or alcohol pad, sealed	1
TL-0016	Wipes (if not using pre-wetted alcohol pads)	As required
TL-0078	OFCC strip tool	1
TL-0045	Aramid yarn shears	1
TL-0071	Safety glasses	1
TL-0069	Ruler	1
TL-0079	Buffer strip tool	1
	Fusion splice tray (M24728/8-51)	1
TL-0101	Heat gun	1
	1.25 or 0.75 inch Fiberglass Cloth Tape (MIL-I-19166)	As required
	10.16-cm (4-inch) long self-cinching straps (SAE-AS23190)	As required
	30.48-cm (12-inch) strand of 900-micron fiber	As required

NOTES:

1. Products to be considered for addition to the recommended tool or test equipment shall obtain approval as specified (see 6.5).
2. CAUTION: Throughout the fabrication process, cleanliness is critical to obtaining a high quality optical connection. Make sure that your hands and the work area are as clean as possible to minimize the ingress of dirt into the splices.

4. PROCEDURES

4.1 Safety summary. The following safety procedures shall be observed:

a. Wear safety glasses at all times when handling bare fibers.

b. Do not touch the ends of bare fiber. Wash hands thoroughly after handling bare fibers.

c. When visually inspecting an optical fiber, do not stare into the end of a fiber connected to a laser source or LED.

d. Observe warnings and cautions on equipment and materials.

4.2 Procedure.

4.2.1 Cable preparation. The following steps shall be performed:

Step 1. Verify that the procedures of Method 2A1, Method 2B1, Method 2G1, or Method 2H1 and the fiber blowing process (if required) have been completed.

Step 2. When installing BOF individual fibers or BOF bundles through loose tube furcation cables, verify the procedures of Method 2F2 or Method 2F3 have been completed. Verify the furcation legs within the FOICB are routed in accordance with Method 2C1.

Step 3. When installing BOF individual fibers or BOF bundles through 5-millimeter BOF tubing, verify the procedures of Method 2M1have been completed. Refer to 4.2.3 of this method for 5-millimeter BOF tubing procedures.

Step 4. When installing M85045 conventional cable, verify the procedures of Method 2C1 or Method 2C2 for routing, forming, and shaping within the FOICB have been completed.

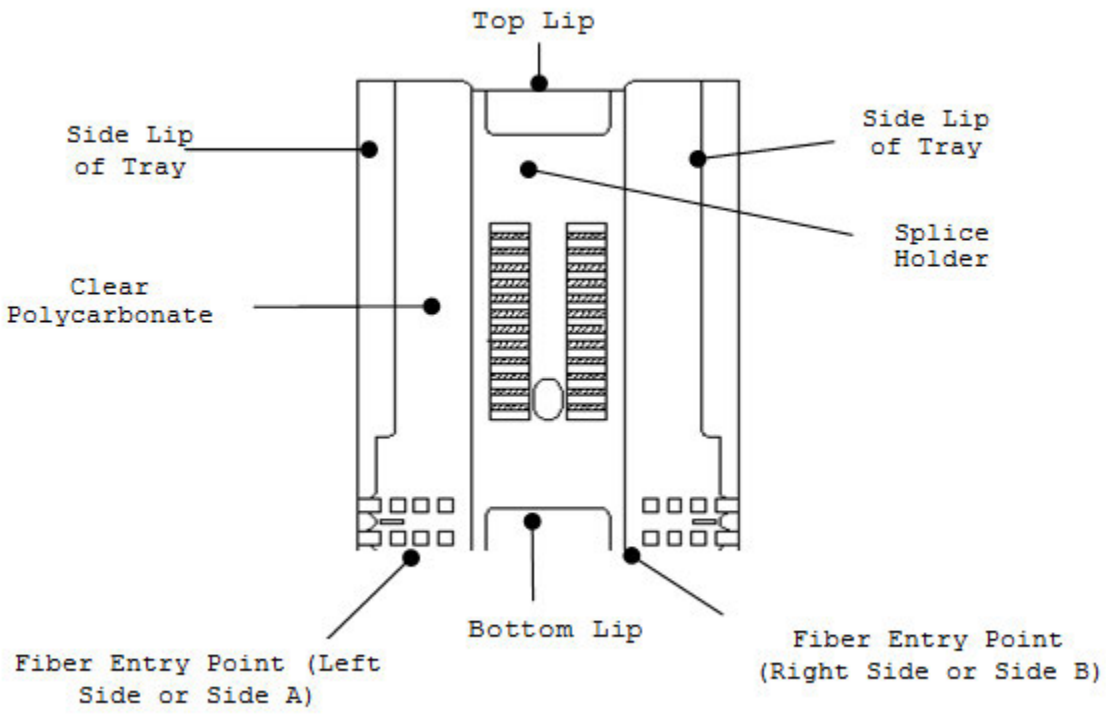

FIGURE 2K1-1. Diagram of splice tray.

4.2.2 OFCC and loose tube furcation cable entry and preparation. The following steps shall be performed:

Step 1. Bring the OFCC or furcation legs (from hereforth, OFCC) to the splice tray where the optical fibers will be spliced. Place a mark on the OFCC where the fiber enters the splice tray. Place a second mark on the OFCC at the retention slot in the splice tray farthest away from the entry point.

NOTE: Ensure 63.5 centimeters (25 inches) of fiber extend past the splice tray entry point.

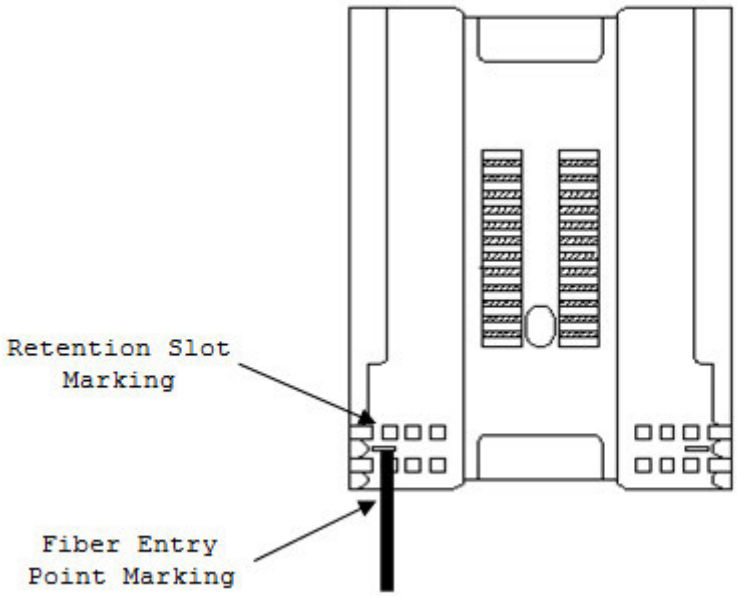

FIGURE 2K1-2. OFCC initial marking.

Step 2. Install OFCC fiber identification markers on the OFCCs entering and exiting the splice tray (see figure 2K1-3).

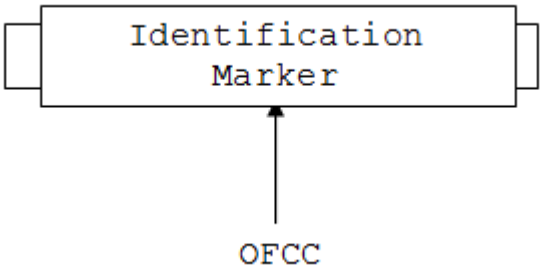

FIGURE 2K1-3. Installing ID marker.

Step 3. There are two sets of fibers to be spliced, set “A” (Input) and set “B” (Output). Set “A” fibers are fusion spliced to set “B” fibers. From the retention slot mark (from step 1) on the OFCC, measure out 15.24 centimeters (6 inches) on set “A” and mark that point. From the retention slot mark (from step 1) on the OFCC, measure out 63.5 centimeters (25 inches) and mark that point. Cut off any remaining fiber past the 63.5-centimeter (25-inch) mark (see figure 2K1-4). Remove the OFCC jacket and aramid yarn past the 15.24-centimeter (6-inch) mark. Then, remove the remaining OFCC jacket past the retention slot mark, leaving 15.24 centimeters (6 inches) of aramid yarn in place. Repeat this process for all remaining fibers in both sets “A” and “B” (see figure 2K1-5).

NOTE: The optimum way to remove a 2-millimeter OFCC jacket is to ring-cut the jacket with the OFCC stripper and pull the jacket off by hand. Pushing off the OFCC jacket with a tightly held OFCC stripper can lead to fiber breakage.

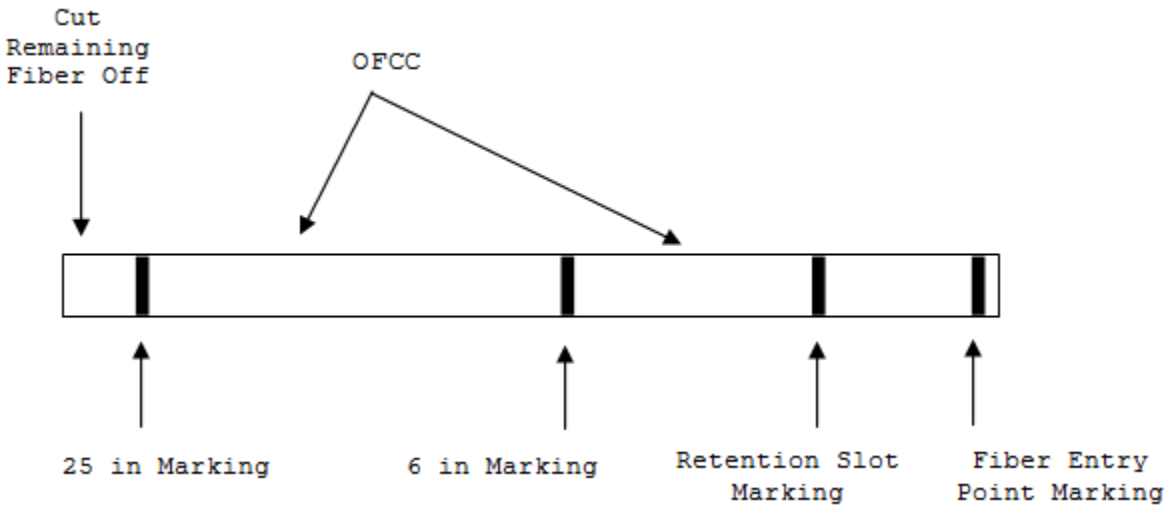

FIGURE 2K1-4. OFCC final marking.

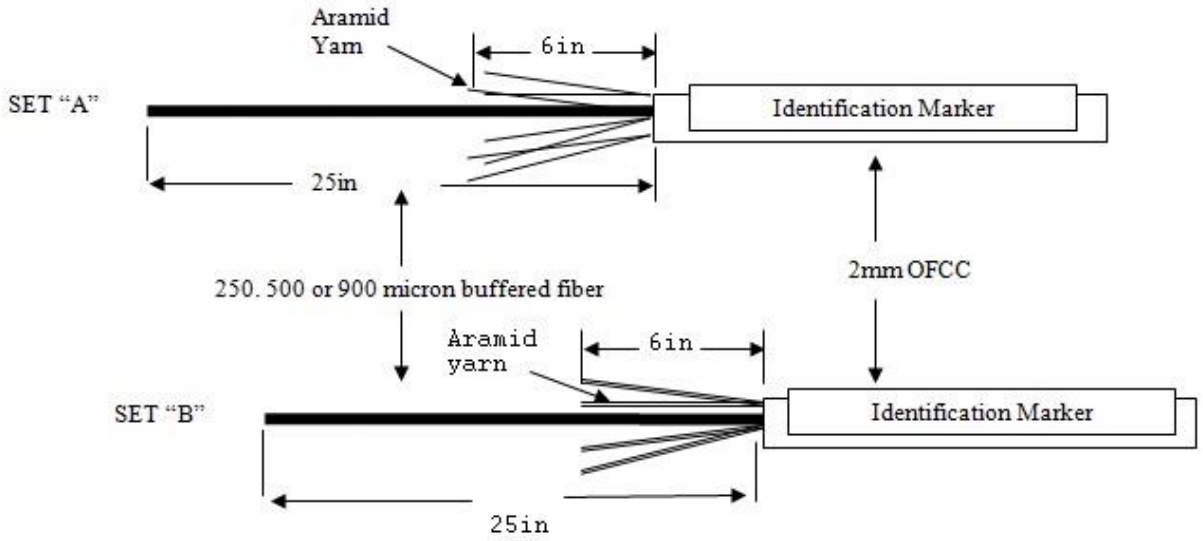

FIGURE 2K1-5. Diagram of 63.5-centimeter (25-inch) strip length with aramid yarn.

Step 4. Fiber sets "A" (input) and "B" (output) (250-, 500-, or 900-micron buffered fibers) shall enter the splice tray at opposite corners of the same end of the splice tray. Set "A" should enter on the left side of the tray and set "B" should enter on the right side of the tray. Approximately 19 millimeters (0.75 inch) of the 2-millimeter OFCC shall enter the tray at each corner.

Step 5. Install fiber identification markers on the buffered fiber if required (see figure 2K1-6).

NOTE: Do not shrink the identification markers on the buffered fiber.

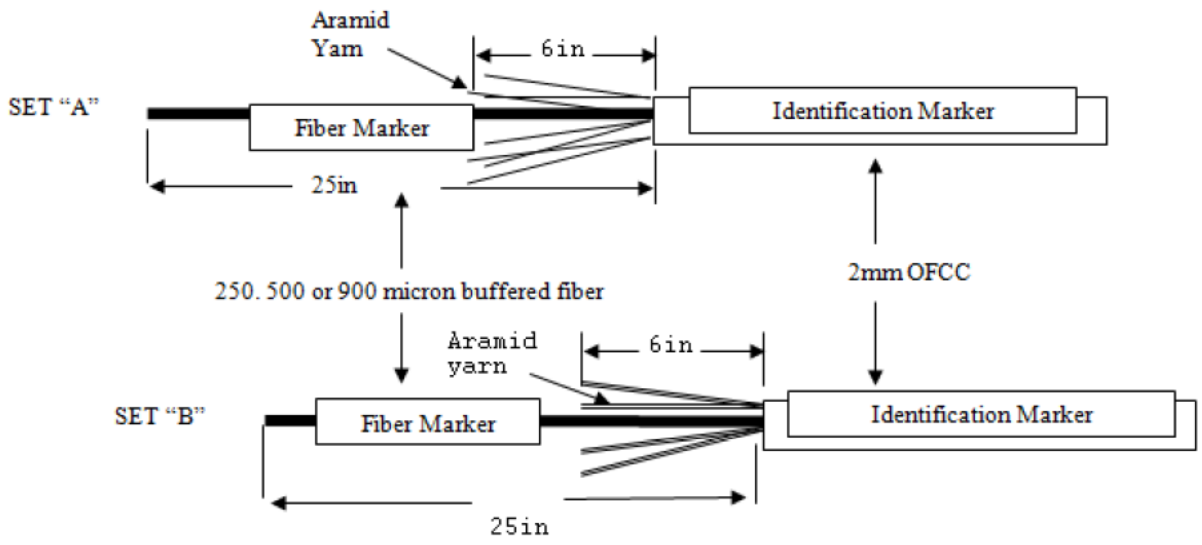

FIGURE 2K1-6. Fiber identification markers.

NOTE: Ensure that the OFCC identification marker placed on the OFCCs during step 2 matches the fiber identification marker installed on the buffered fiber.

Step 6. Separate the aramid yarn from the buffered fiber, ensuring it does not cross another fiber strand. Gather the aramid yarn of the first OFCC group for set "A" and wrap the bundled aramid yarn around the outer-most retention slot (see figure 2K1-7).

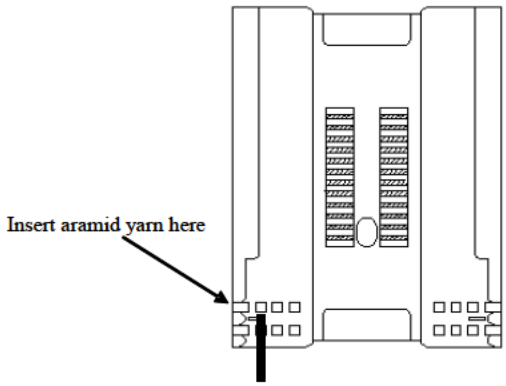

FIGURE 2K1-7. Inserting aramid yarn.

Step 7. Insert a tie wrap into the first set of retention slots closest to the entry point of the splice tray (see figure 2K1-8). Cinch the tie wrap down around the OFCC group and aramid yarn until snug and cut off the excess tie wrap.

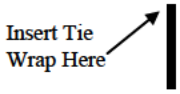

FIGURE 2K1-8. Tie wrap installation.

NOTE: Ensure that the permanent tie wraps are installed with the buckle on the back or outside of the splice tray.

NOTE: Do not cut aramid yarn. The remaining length will be used in steps to follow.

CAUTION: Great care should be taken to ensure fibers are not damaged when installing tie wraps. Excessive cinching may cause high loss or broken fibers.

NOTE: No more than four fibers shall be grouped together when using tie wraps to hold the fibers to the splice tray.

NOTE: When grouping fibers together, fiber set "A" (input) and fiber set "B" (output) shall be grouped from outside-to-inside on the appropriate side of the splice tray. For the left side (set "A"), the order of the grouped fibers shall be splices 1 through 4 at the left-most position, splices 5 through 8 at the center position, and splices 9 through 12 at the right-most position. For the right side (set "B"), the order of the grouped fibers shall be splices 1 through 4 at the right-most position, splices 5 through 8 at the center position, and splices 9 through 12 at the left-most position.

Step 8. Gather the aramid yarn bundle and twist the strands together. Pull the twisted group forward toward the end of the splice tray opposite from the fiber entry point.

Step 9. Tape down the aramid yarn to the back/outside of the splice tray with fiberglass cloth tape (see figure 2K1-9).

NOTE: Clean back/outside of the splice tray with alcohol before applying tape.

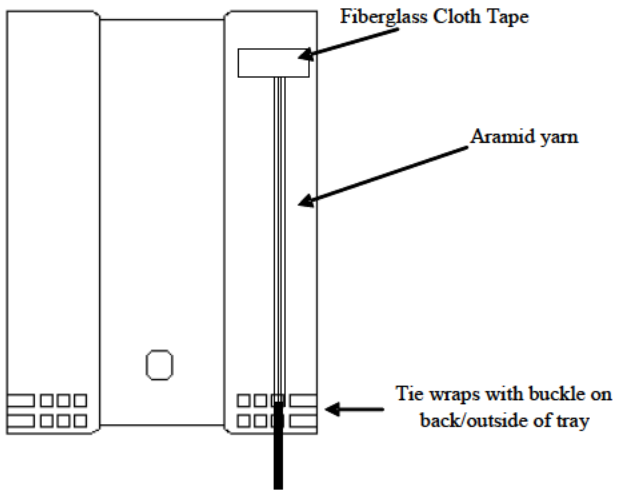

FIGURE 2K1-9. Taping down aramid yarn.

Step 10. Loop the 30.48-centimeter (12-inch) piece of 900-micron waste fiber and insert it through the front-left retention slot in the splice tray farthest away from the entry point (see figure 2K1-10).

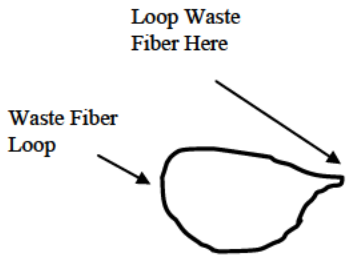

FIGURE 2K1-10. Fiber waste loop.

Step 11. Gather the aramid yarn of the second OFCC group for set "A" and insert the bundled aramid yarn through the loop using the left retention slot (see figure 2K1-11).

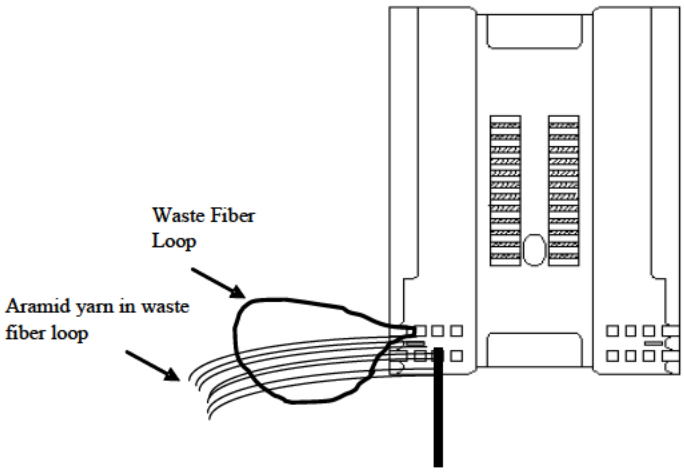

FIGURE 2K1-11. Gathering aramid yarn.

Step 12. Pull the 900-micron waste section and the bundle of aramid yarn through the splice tray retention slot. Pull aramid yarn back to the OFCC group and first set of retention slots closest to the splice tray entry point.

Step 13. Insert a tie wrap into the first set of retention slots closest to the entry point of the splice tray (see figure 2K1-12). Cinch the tie wrap down around the OFCC group and aramid yarn until snug and cut off the excess tie wrap.

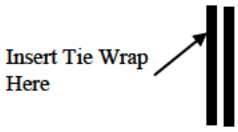

FIGURE 2K1-12. Tie wrap installation.

Step 14. Gather the aramid yarn bundle and twist the strands together. Pull the twisted group forward toward the end of the splice tray opposite from the fiber entry point.

Step 15. Insert twisted aramid yarn under tape used for set "A" Group 1 fibers (see figure 2K1-13).

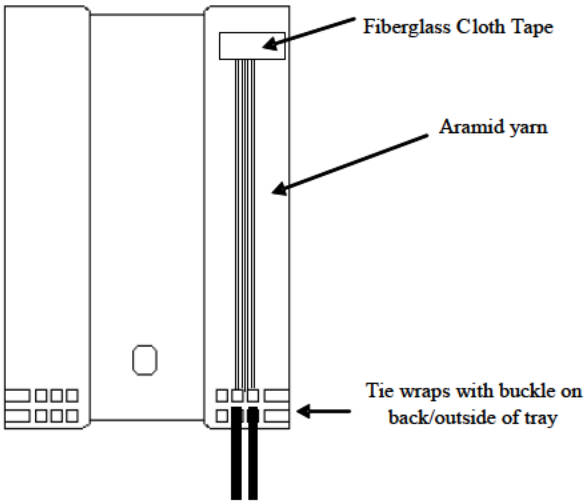

FIGURE 2K1-13. Aramid yarn positioning on back of splice tray.

Step 16. Gather the aramid yarn of the third OFCC group for set "A" and insert the bundled aramid yarn through the loop of 900-micron waste using the center retention slot.

Step 17. Pull the 900-micron waste section and the bundle of aramid yarn through the splice tray retention slot. Pull the aramid yarn back to the OFCC group and first set of retention slots closest to the splice tray entry point.

Step 18. Insert a tie wrap into the first set of retention slots closest to the entry point of the splice tray. Cinch the tie wrap down around the OFCC group and aramid yarn until snug and cut off the excess tie wrap.

Step 19. Gather the aramid yarn bundle and twist the strands together. Pull the twisted group forward toward the end of the splice tray opposite from the fiber entry point.

Step 20. Insert twisted aramid yarn under tape used for set "A" Group 1 fibers.

Step 21. Once all the groups of aramid yarn for set "A" have been taped down in place, cover the exposed aramid yarn with a 1¼-inch wide section of fiberglass cloth tape to secure all the aramid yarn strands to the back or outside of the splice tray (see figure 2K1-14 for completed set "A" fibers).

NOTE: Alternate tape width of 0.75-inch fiberglass cloth tape may be used (two pieces overlapped).

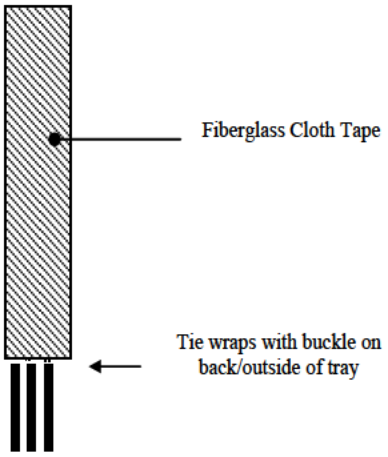

FIGURE 2K1-14. Taping aramid yarn down on back of splice tray.

CAUTION: Ensure that the fiberglass cloth tape does not extend onto the raised center section of the splice tray and that the tape is flush against the tie wrap(s). This will prevent the aramid yarn and tape from snagging on the splice tray holder module slot.

NOTE: Ensure that the permanent tie wraps have the buckle on the back or outside of the splice tray.

Step 22. Repeat steps 6 through 21 for set "B" fibers.

4.2.3 BOF entry and preparation (5-millimeter BOF tubing to splice tray). The following steps shall be performed:

Step 1. Verify that Method 2L1 is followed and that the appropriate methods for routing, forming, and shaping of the 5-millimeter BOF tube within the specific fiber optic enclosure are followed (e.g., Method 2C2).

Step 2. Verify that Method 2M1 is followed for attaching all 5-millimeter BOF tubing to the splice tray.

4.2.4 Shaping and forming within the splice tray.

Step 1. Select the fiber from set "A" and the fiber from set "B" designated to be spliced together. Verify both fibers are 63.5 centimeters (25 inches) in length.

Step 2. Perform fusion splicing and install splices in accordance with MIL-STD-2042-5, Method 5C2.

Step 3. Gently grasp and lift splice(s) at the splice protection sleeve.

Step 4. Rotate splices 180 degrees, causing fibers to cross and create a figure-eight pattern (see figure 2K1-15).

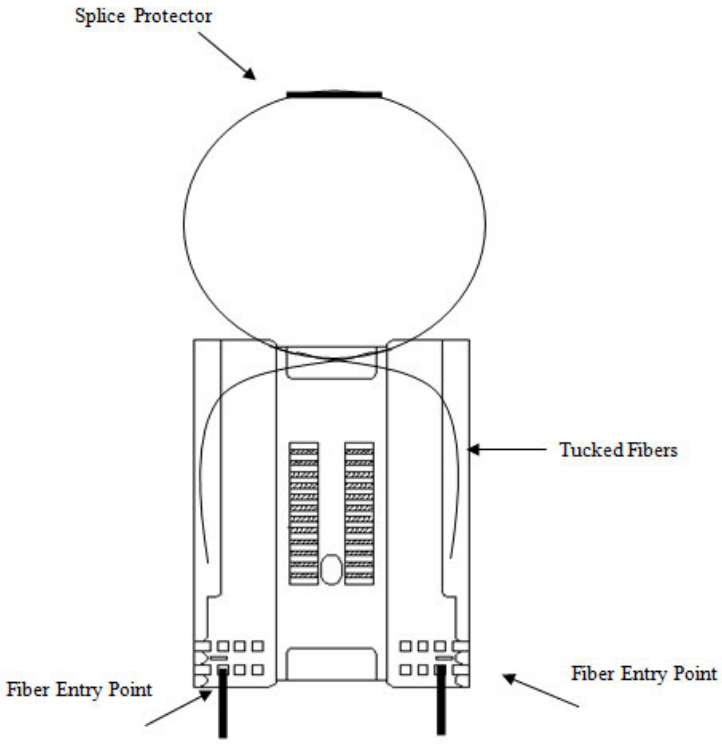

FIGURE 2K1-15. Figure-eight pattern.

Step 5. Tuck fibers under side lips of tray.

Step 6. Gently grasp and flip splice(s) toward the fiber entry point of the tray (see figure 2K1-16).

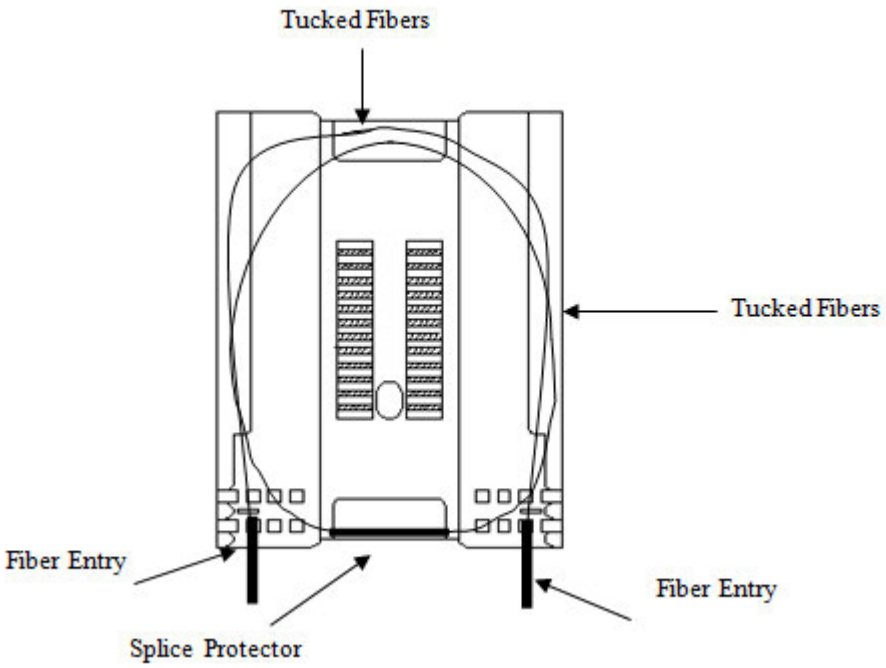

FIGURE 2K1-16. Fiber tucking.

Step 7. Tuck fibers under the top lip of the tray and ensure fibers stay tucked underneath the side lips of tray.

Step 8. Rotate splices 180 degrees, causing fibers to cross and create a figure-eight pattern.

Step 9. Place splice(s) in the designated splice holder location.

Step 10. Repeat steps 1-9 for the remaining fibers designated for splicing.

Step 11. Tuck all remaining fibers under the lips of the splice tray (see figure 2K1-17). An example of a completed splice tray appears below (see figure 2K1-18).

CAUTION: Great care shall be taken when performing the figure-eight method. Fiber can become pinched or exceed designated bend diameter when performing this method.

Step 12. Ensure that the polycarbonate sheet is installed over splices and tucked under side edges to hold splices in place when cover is removed.

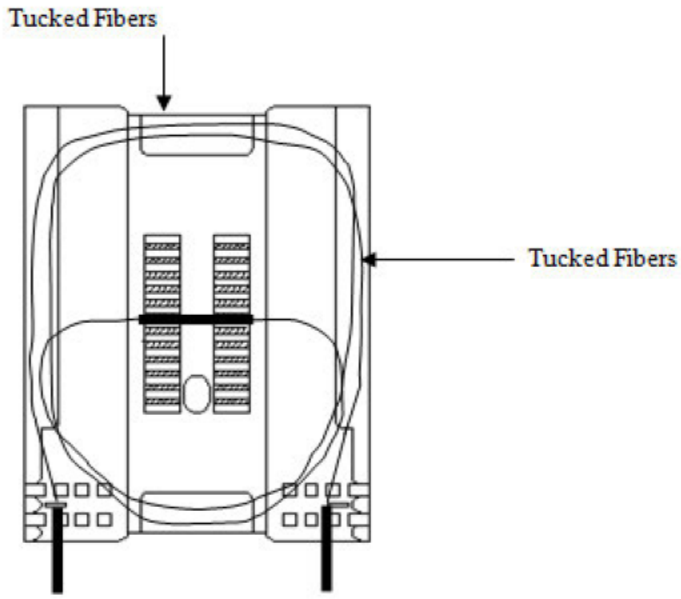

FIGURE 2K1-17. Splice installation.

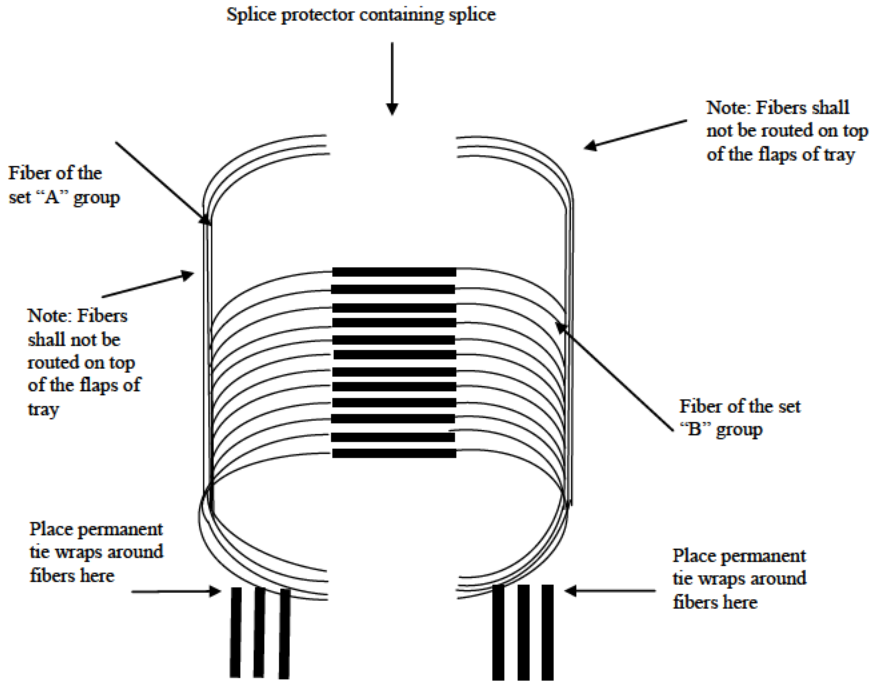

FIGURE 2K1-18. Finished splice tray.

Step 13. When all fusion splicing is complete and all trays have been returned into the splice tray holder module, replace both splice tray holder side arm brackets on the splice tray holder module. Tighten both bolts on each splice tray holder side arm bracket.

NOTE: Aligning all of the bolts can be difficult, as the side arm brackets intentionally fit tightly around the splice trays. The best known practice is to align and lightly tighten all bolts to ensure all bolts are engaged before performing the final tightening of all bolts.

Step 14. Replace the splice tray holder lid and fully tighten all four bolts.

NOTE: Aligning all of the bolts can be difficult as the lid intentionally fits tightly on the splice trays. The best known practice is to align and lightly tighten all bolts to ensure all bolts are engaged before performing the final tightening of all bolts.

4.2.5 Splice tray labeling. The following shall be performed:

NOTE: An optional label for the splices contained within the splice tray can be installed on the outside of the splice tray cover (see figure 2K1-19).

Ensure that the splices within the splice tray and label on the outside of the splice tray cover have corresponding identification numbers.

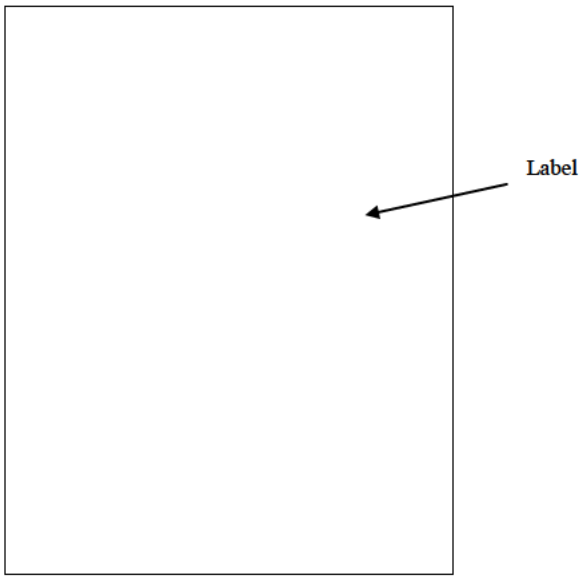

FIGURE 2K1-19. Example of labeling.

METHOD 2K2
FUSION SPLICE ROUTING, SHAPING, AND FORMING FOR 10-INCH COTS SPLICE TRAY

1. SCOPE

1.1 Scope. This method describes the procedure for the forming, shaping, and fusion splicing of two optical fibers with a fusion splicer approved to A-A-59799. The resultant splice shall adhere to MIL-PRF-24623/6 splices, with 250-, 500-, or 900-micron protective jacket (buffered fiber), within a 10-inch COTS splice tray. The 10-inch COTS splice tray supports up to twenty-four (24) fusion splices.

1.2 Applicability statement. This method is approved for use by the VA Class Submarine Program. All other uses of this method require approval prior to implementation from: Department of Navy, Naval Surface Warfare Center, Dahlgren Division, ATTN: Fiber Optics Section, 17214 Avenue B Suite 126, Dahlgren, VA 22448-5147 or DLGR_NSWC_FO_ENG@navy.mil.

1.3 Method dependencies. During execution of this method the user will, at certain points, need to complete MIL-STD-2042-5, Method 5C2. If the user is printing this method for reference, it is recommended to print Method 5C2 as well.

2. DOCUMENTS APPLICABLE TO METHOD 2K2

2.1 General. The documents listed in this section are specified in Method 2K2 of this standard. This section does not include documents cited in other sections of this standard or recommended for additional information or as examples. While every effort has been made to ensure the completeness of this list, document users are cautioned that they must meet all specified requirements of documents cited in Method 2K2 of this standard, whether or not they are listed.

2.2 Government documents.

2.2.1 Specifications, standards, and handbooks. The following specifications, standards, and handbooks form a part of this document to the extent specified herein. Unless otherwise specified, the issues of these documents are those cited in the solicitation or contract.

COMMERCIAL ITEM DESCRIPTIONS

A-A-59731 - Tube Fittings, Blown Optical Fiber

DEPARTMENT OF DEFENSE SPECIFICATIONS

MIL-I-19166 - Insulation Tape, Electrical, High-Temperature, Glass Fiber, Pressure-Sensitive

MIL-DTL-24728/8 - Interconnecting Box, Fiber Optic, Fusion Splice Tray and Holder Module

DEPARTMENT OF DEFENSE STANDARDS

MIL-STD-2042-5 - Fiber Optic Cable Topology Installation Standard Methods for Surface Ships and Submarines (Connectors and Interconnections) (Part 5 of 7 Parts)

(Copies of these documents are available online at http://quicksearch.dla.mil/.)

2.2.2 Other Government documents, drawings, and publications. The following other Government documents, drawings, and publications form a part of this document to the extent specified herein. Unless otherwise specified, the issues of these documents are those cited in the solicitation or contract.

NAVAL SEA SYSTEMS COMMAND (NAVSEA) DRAWINGS

408-8347175 - Fiber Optic Installation Approved Methods for Restricted Use on Naval Ships

(Copies of this document are available from NSWC Dahlgren by emailing DLGR_NSWC_FOWEB@navy.mil.)

2.3 Non-Government publications. The following documents form a part of this document to the extent specified herein. Unless otherwise specified, the issues of these documents are those cited in the solicitation or contract.

SAE INTERNATIONAL

SAE-AMS-DTL-23053/5 - Insulation Sleeving, Electrical, Heat Shrinkable, Polyolefin, Flexible, Crosslinked

SAE-AS23190 - Wiring, Positioning, and Support Accessories

(Copies of these documents are available online at www.sae.org.)

2.4 Order of precedence. Unless otherwise noted herein or in the contract, in the event of a conflict between the text of this document and the references cited herein, the text of this document takes precedence. Nothing in this document, however, supersedes applicable laws and regulations unless a specific exemption has been obtained.

3. REQUIRED EQUIPMENT AND MATERIALS

3.1 Equipment and materials. The equipment and materials in table 2K2-I shall be used to perform this procedure. More detail on approved sources for items with reference numbers can be found on the Dahlgren shipboard fiber optics website (see 6.6). The list on which items appear is indicated by the two-letter prefix as follows:

a. TL = Recommended Tool List

b. TS = Recommended Test Equipment List

TABLE 2K2-I. Equipment and materials.

Reference #	Description	Quantity
TL-0002 or TL-0044	Isopropyl alcohol, 99% pure anhydrous or alcohol pad, sealed	1
TL-0016	Wipes (if not using pre-wetted alcohol pads)	As required
TL-0078	OFCC strip tool	1
TL-0045	Aramid yarn shears	1
TL-0071	Safety glasses	1
TL-0069	Ruler	1
	10-inch splice tray (Hubbell STRAY24F-MIL, or equal [see 4.6])	As required
TL-0079	Buffer strip tool	1
TL-0101	Heat gun	1
	0.75-inch fiberglass cloth tape (MIL-I-19166)	As required
	10-cm (4-inch) long self-cinching straps (SAE-AS23190)	As required
	Heat shrink tubing for labeling (SAE-AMS-DTL-23053/5)	As required

NOTES:

1. Products to be considered for addition to the recommended tool or test equipment shall obtain approval as specified (see 6.5).
2. CAUTION: Throughout the fabrication process, cleanliness is critical to obtaining a high quality optical connection. Make sure that your hands and the work area are as clean as possible to minimize the ingress of dirt into the splices.

4. PROCEDURES

3.1 Safety summary. The following safety procedures shall be observed:

a. Wear safety glasses at all times when handling bare fibers.

b. Do not touch the ends of bare fiber. Wash hands thoroughly after handling bare fibers.

c. When visually inspecting an optical fiber, do not stare into the end of a fiber connected to a laser source or LED.

d. Observe warnings and cautions on equipment and materials.

e. Do not look into the end of a BOF tube. Always wear approved safety glasses when handling BOF tubes that may be connected to a pressure source.

4.2 Procedure. The 10-inch COTS splice tray is capable of supporting the splicing of 24 optical fibers. Figure 2K2-1 provides a diagram of the 10-inch COTS splice tray. Fiber entry point A shall be used for OFCC or loose tube furcation cable entry into the tray. Fiber entry point B can be used for OFCC, loose tube furcation cable, or blown fibers, via 5-millimeter BOF tubes (maximum 3 tubes), entry into the tray.

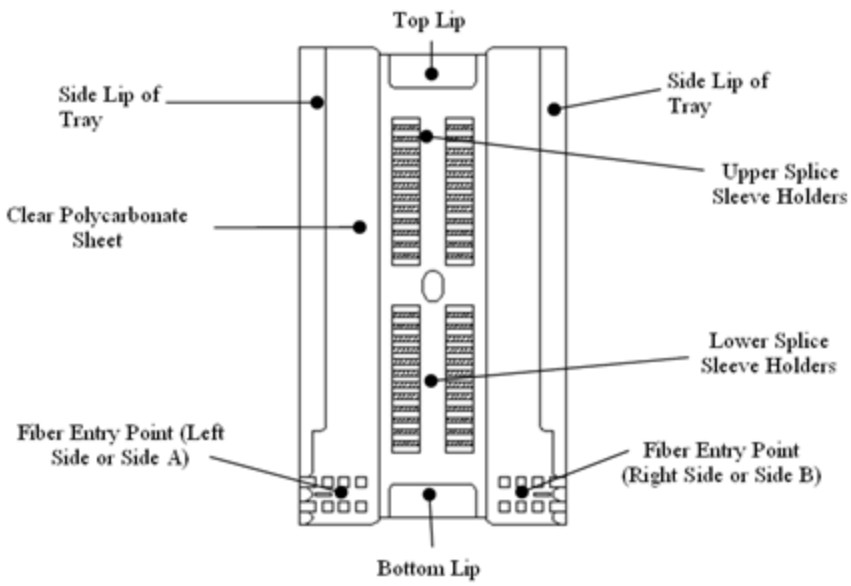

FIGURE 2K2-1. Diagram of 10-inch COTS splice tray.

4.2.1 10-inch splice tray preparation. Four splice sleeve holders are provided with each 10-inch COTS splice tray. The following steps, which describe how to align and install the splice sleeve holders, in pairs, on the tray, if not already installed, shall be performed:

NOTE: The lengths for the fibers to be spliced (81 centimeters [32 inches] for splices to be placed in the upper splice sleeve holder and 50 centimeters [20 inches] for splices to be placed in the lower splice sleeve holder) are based upon the proper placement of the splice sleeve holders. Different locations for the splice sleeve holders require different lengths for the fibers to be spliced.

Step 1. Insert an unshrunk 40-millimeter splice sleeve in the top position in the first splice sleeve holder. Align the outer edge of the splice sleeve with the outer edge of the splice sleeve holder.

Step 2. Insert a second unshrunk 40-millimeter splice sleeve in the bottom position in the same splice sleeve holder. Align the outer edge of the splice sleeve with the outer edge of the splice sleeve holder.

Step 3. Insert the two 40-millimeter splice sleeves, from steps 1 and 2 above, into the second splice sleeve holder. Slide the second splice sleeve holder so that the outer edge of the splice sleeve holder aligns with the outer edges of the splice sleeves (see figure 2K2-2).

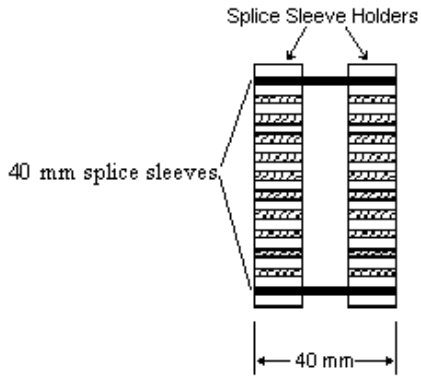

FIGURE 2K2-2. Splice sleeve holder spacing.

Step 4. Remove the adhesive backing on the splice sleeve holders. Place the holders in the "upper splice sleeve holders" location, centered between the two sides of the tray and with the bottom end 11 centimeters (4.33 inches) away from the outside edge of the top lip (see figure 2K2-3).

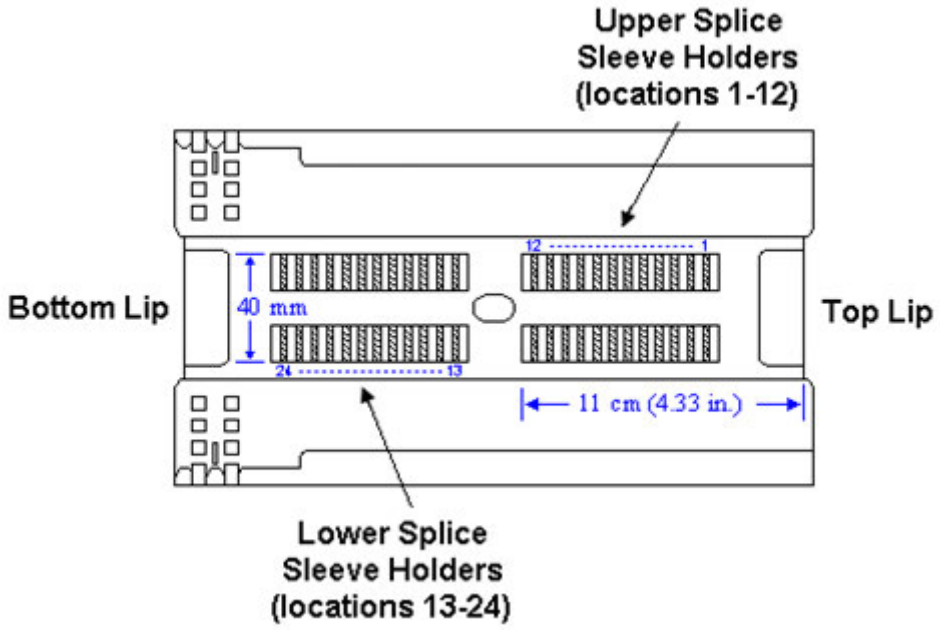

FIGURE 2K2-3. Placement of splice sleeve holders on tray.

Step 5. Repeat steps 1 through 3 for the remaining two splice sleeve holders.

Step 6. Remove the adhesive backing on the splice sleeve holders. Place the holders in the "lower splice sleeve holders" location, centered between the two sides of the tray and with the top end 11 centimeters (4.33 inches) away from the outside edge of the bottom lip.

NOTE: The splice sleeve holder locations are numbered 1 through 24. Splice sleeve holder location 1 is the top-most location in the upper splice sleeve holder, farthest from the fiber entry into the splice tray. Splice sleeve holder location 12 is located at the bottom of the upper splice sleeve holder. Splice sleeve holder location 13 is the top-most location in the lower splice sleeve holder, farthest from the fiber entry into the splice tray. Splice sleeve holder location 24 is located at the bottom of the lower splice sleeve holder, closest to the fiber entry into the splice tray.

4.2.2 OFCC and loose tube furcation cable entry and preparation. The following steps shall be performed:

NOTE: The 10-inch COTS splice tray is intended for NAVSEA-approved applications requiring more than 12 fusion splices per tray. All other applications for fusion splicing shall use splice trays qualified to MIL-DTL-24728/8.

Step 1. When installing BOF individual fibers or BOF bundles through loose tube furcation cables, verify that the procedures of Methods 2F2 or 2F3 have been completed. Verify the furcation legs have been routed in accordance with Methods 2C1 or 2C2, or 408-8347175, Method 2I4 for routing, forming, and shaping within the specific fiber optic or equipment enclosure.

Step 2. When installing M85045 conventional cable, verify the procedures of Methods 2C1 or 2C2, or 408-8347175, Method 2I4 for routing, forming, and shaping within the specific fiber optic or equipment enclosure.

Step 3. Bring the OFCCs or loose tube furcation legs (from hereforth, OFCCs) to the splice tray where the optical fibers will be spliced. Place a mark on the OFCCs where the fiber enters the splice tray. Place a second mark on the OFCCs at the top of the retention slot in the splice tray farthest away from the OFCC entry point (see figure 2K2-4).

NOTE: For the 10-inch COTS splice tray, there are two lengths for the fiber that extend beyond the splice retention slot (81.28 centimeters [32 inches] for splices 1 through 12 that use the upper splice sleeve holder and 50.8 centimeters [20 inches] for splices 13 through 24 that use the lower splice sleeve holder). Ensure that at least 83.82 centimeters (33 inches) of fiber extend past the splice tray retention slot mark.

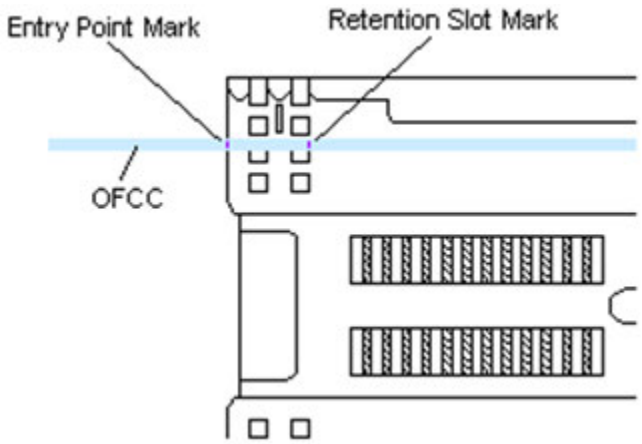

FIGURE 2K2-4. OFCC marking of entry point and retention slot.

Step 4. Install OFCC identification markers on the OFCCs entering (and exiting) the splice tray (see "OFCC marker" on figure 2K2-5).

Step 5. From the retention slot mark (from step 3, above) on the OFCCs, measure out 15.24 centimeters (6 inches) and mark that point.

Step 6. From the retention slot mark on the OFCCs, measure out 83.82 centimeters (33 inches) and mark that point. Cut off any remaining fiber past the 83.82-centimeter (33-inch) mark (see figure 2K2-5).

Step 7. Remove the OFCC jacket and aramid yarn past the 15.24-centimeter (6-inch) mark. Then, remove the remaining OFCC jacket past the retention slot mark, leaving 15.24 centimeters (6 inches) of aramid yarn in place (see figure 2K2-5). Repeat this step for the remaining OFCCs.

NOTE: The optimum way to remove a 2-millimeter OFCC jacket is to ring cut the jacket with the OFCC stripper and to pull the jacket off by hand.

WARNING: Pushing off the OFCC jacket with a tightly held OFCC stripper can lead to fiber breakage.

Step 8. Remove the OFCC jacket and aramid yarn past the 15.24-centimeter (6-inch) mark. Then, remove the remaining OFCC jacket past the retention slot mark, leaving 15.24 centimeters (6 inches) of aramid yarn in place (see figure 2K2-5). Repeat this step for the remaining OFCCs.

NOTE: Do not shrink the fiber identification markers on the buffered fiber.

NOTE: Make sure that the OFCC identification markers placed on the OFCC during step 4 correspond to the fiber identification markers installed on the buffered fiber.

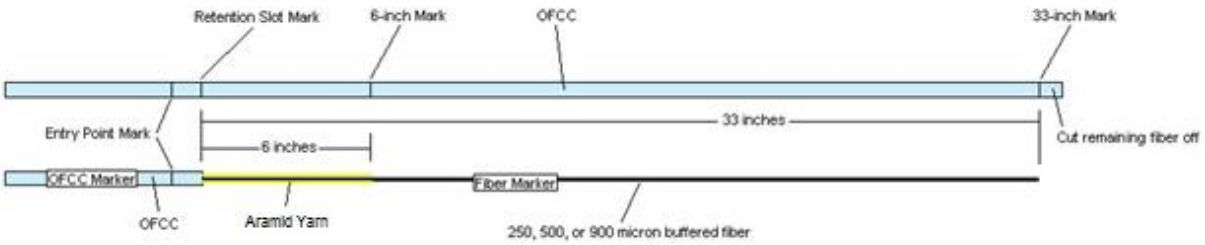

FIGURE 2K2-5. Diagram of OFCC/fiber marking and the 83.82-centimeter (33-inch) fiber length with aramid yarn.

Step 9. The intent for the 10-inch COTS splice tray is to support more than 12 fusion splices. To attach 12 or more OFCCs to the 10-inch COTS splice tray, use the "aramid yarn loop" method described in step 9.c for the first 12 OFCCs and repeat step 9 for the remaining OFCCs. The "aramid yarn loop" method described in step 9.c should be used to attach 5 to 12 OFCCs to the 10-inch COTS splice tray. The "aramid yarn capture" method, described in step 9.a, should be used when an initial configuration of OFCCs has been attached to the splice tray and the remaining number of OFCCs to be attached to the tray is four or fewer. An alternative method for attaching two to four OFCCs to the 10-inch COTS splice tray using the "aramid yarn loop" method is described in step 9.b.

NOTE: The "aramid yarn capture" method may be desirable for instances where re-work is anticipated. It is possible to convert the four OFCCs "aramid yarn capture" configuration (described in step 9.a) to an "aramid yarn loop" configuration, but if future growth is planned, the use of the "aramid yarn loop" method (described in step 9.b) for two to four OFCCs is recommended.

Step 9.a. Attach one to four OFCC(s) to the 10-inch COTS splice tray using the "aramid yarn capture" procedure described in Method 2K1.

a. Perform steps 6 through 21 of Method 2K1, 4.2.2 in (shaping and forming in the splice tray) to secure up to four OFCCs to the 10-inch COTS splice tray.

Step 9.b. Attach two to four OFCC(s) to the 10-inch COTS splice tray using the "aramid yarn loop" method.

a. Group the OFCCs, aligning the retention slot marks. The aramid yarn should be draped away from the OFCC jackets, along with the buffered fibers. Wrap a 2.54-centimeter (1-inch) strip of fiberglass cloth tape around the OFCC grouping with the top at the retention slot mark (see figure 2K2-6A).

b. Separate the aramid yarn from the buffered fibers, pulling the aramid yarn to the same side and back over the tape towards the OFCC jackets (see figure 2K2-6B). Ensure that the aramid yarn does not cross another fiber strand.

NOTE: To help separate the aramid yarn, hold the fibers vertical (buffered fiber above). Work away from the center and separate the aramid yarn to the outer side of the bundle, leaving the buffered fibers in the center.

c. Gather the aramid yarn and hold taut over the taped bundle and alongside the OFCC jacket. Apply a second 2.54-centimeter (1-inch) strip of fiberglass cloth tape 3.175 millimeters (⅛ inch) below the retention slot mark (toward the OFCC jackets). Wrap the tape around the OFCC jackets and the gathered aramid yarn (see figure 2K2-6C).

NOTE: This second strip of tape over the aramid yarn and OFCCs creates the "aramid yarn loop" that can be used to secure the OFCCs to the splice tray.

d. Twist the strands of aramid yarn and pull taut alongside the OFCC jackets. Wrap a third 2.54-centimeter (1-inch) strip of fiberglass cloth tape around the OFCC jackets and the gathered aramid yarn with the bottom of this third strip 7.62 centimeters (3 inches) below the retention slot mark (see figure 2K2-6D).

e. Pull the twisted strands of aramid yarn over the third strip of tape toward the retention slot mark (see figure 2K2-6E) and wrap a fourth 2.54-centimeter (1-inch) strip of fiberglass cloth tape around the OFCC jackets and the gathered aramid yarn, with the bottom of this fourth strip 12.7 millimeters (½ inch) above the bottom of the third strip (see figure 2K2-6F).

f. Trim off the excess aramid yarn protruding out from the fourth strip of tape.

g. Spiral-wrap a 15.24-centimeter (6-inch) strip of fiberglass cloth tape, starting at the top of the second strip of tape at approximately a 45-degree angle, down over the OFCCs and aramid yarn (see figure 2K2-6G). Pull the spirals taut and ensure that the overlap of the spirals is between 6.35 and 9.525 millimeters (¼ and ⅜ inch) in width. At the bottom of the wrap, below the third strip of tape, the final spirals should be perpendicular to the OFCCs and should cover the aramid yarn at the third strip of tape (see figure 2K2-6H).

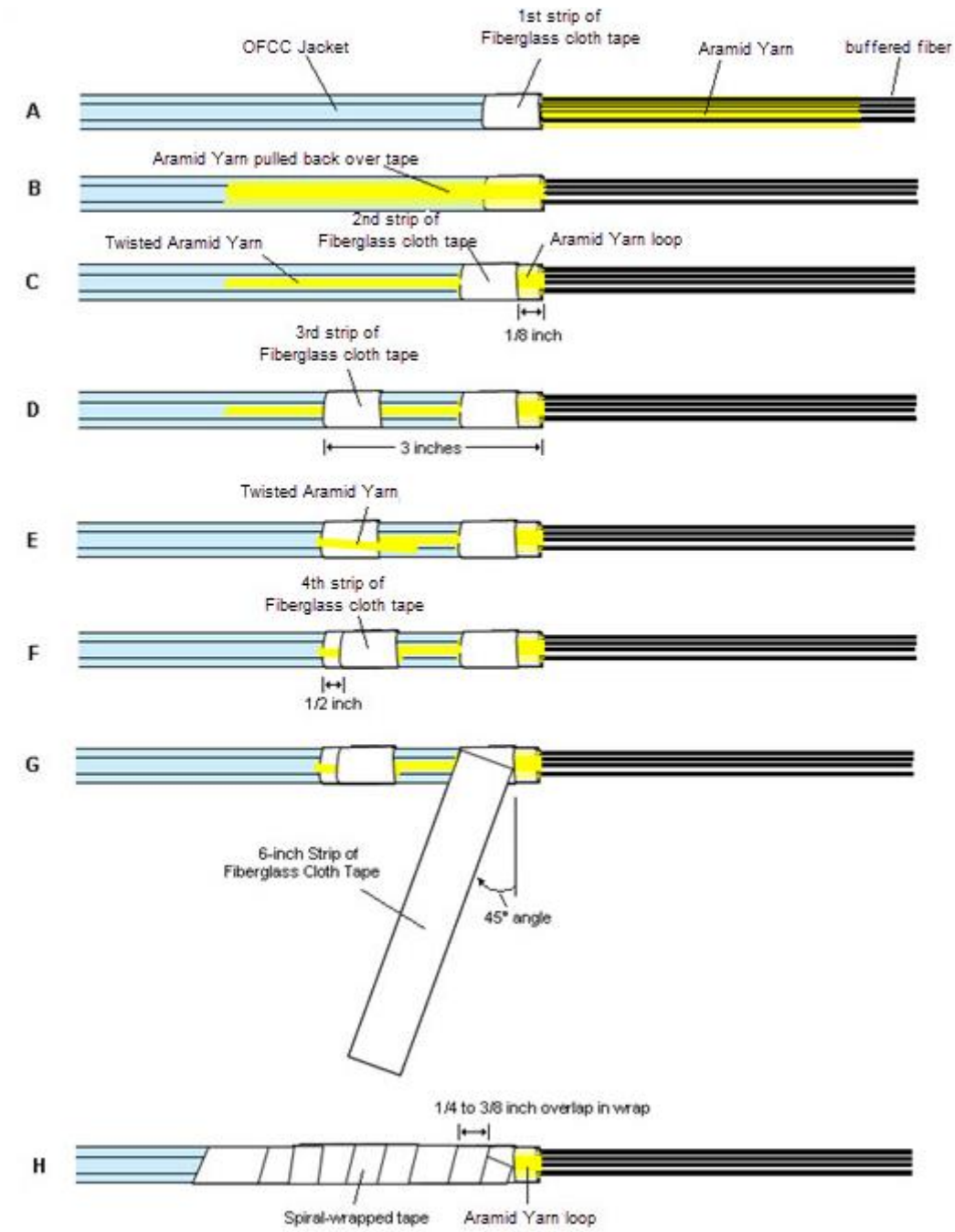

FIGURE 2K2-6. Aramid yarn loop diagrams (two to four OFCCs).

h. Carefully push a tie wrap through the “aramid yarn loop” (i.e., between the aramid yarn strands and the first tape strip). When attaching the OFCC bundle to the left-most position on the “A” side of the splice tray or the left-most position on the “B” side of the splice tray, push the tie wrap into the aramid yarn loop from the left to the right, with the “buckle” facing up (see figure 2K2-7A). When attaching the OFCC bundle to the right-most position on the “A” side of the splice tray or the right-most position on the “B” side of the splice tray, push the tie wrap into the “aramid yarn loop” from the right to the left, with the “buckle” facing up (see figure 2K2-7B).

NOTE: A tie wrap should pass between the tape and the majority of the aramid yarn.

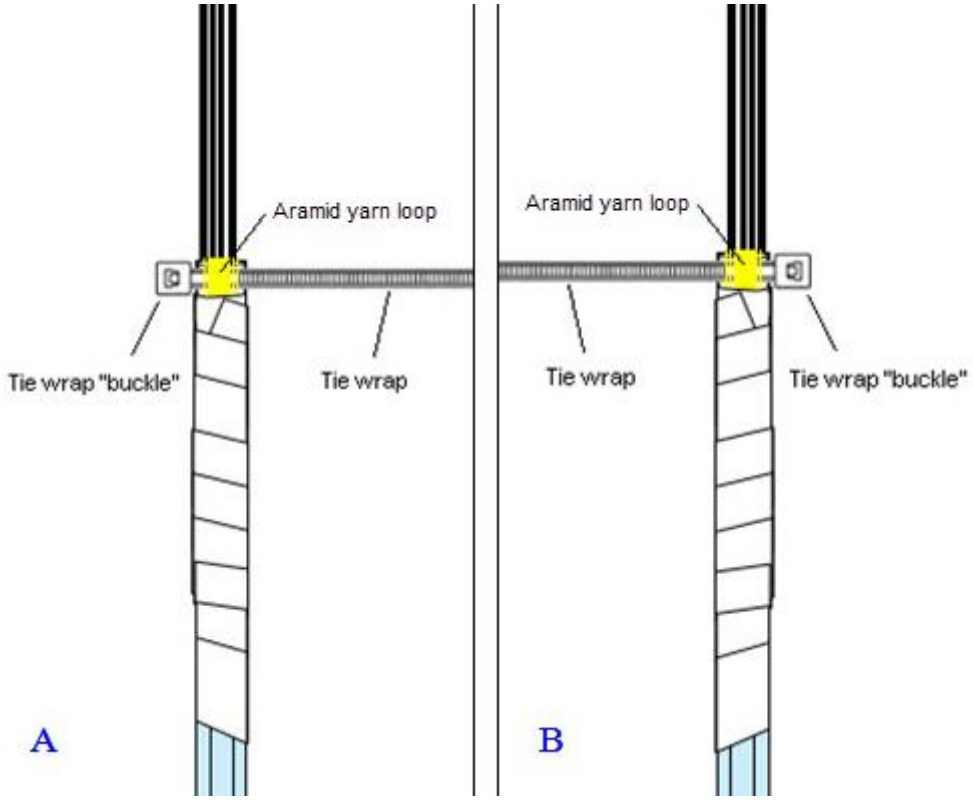

FIGURE 2K2-7. Tie wrap through aramid yarn loop.

i. When attaching the OFCC bundle to the left-most position on the “A” side, or on the right-most position on the “B” side, insert the end of the tie wrap through the retention slot furthest from the tray entry point and closest to the side of the tray, loop through the retention slot next to the initial retention slot used (between the side tabs), and back up and through the tie wrap buckle. Cinch the tie wrap down around the OFCC bundle until snug and cut off the excess tie wrap (see figure 2K2-8A).

When attaching the OFCC bundle to the right-most position on the “A” side, or on the left-most position on the “B” side, insert the end of the tie wrap through the retention slot furthest from the tray entry point and closest to the side of the tray (this retention slot will be shared with tie wrap from the first OFCC bundle), loop through the retention slot furthest from the tray entry point and closest to the center of the tray, and back up and through the tie wrap buckle. Cinch the tie wrap down around the OFCC bundle until snug and cut off the excess tie wrap (see figure 2K2-8B).

NOTE: It may be necessary to bend open the two side tabs on the splice tray in order to attach the OFCC bundle to the outer-most location on either the “A” side or the “B” side of the splice tray.

NOTE: For the right-most OFCC bundle on the “A” side of the splice tray or the left-most OFCC bundle on the “B” side of the splice tray, the buckles shall be tucked as low as possible to the tray bottom so that the cover can be secured.

j. Loop a second tie wrap around the OFCC bundle, in the same direction as in sub-step "h" through the adjacent set of retention slots, closest to the splice tray entry point, cinch the tie wrap down around the OFCC bundle until snug, and cut off the excess tie wrap (see figure 2K2-8).

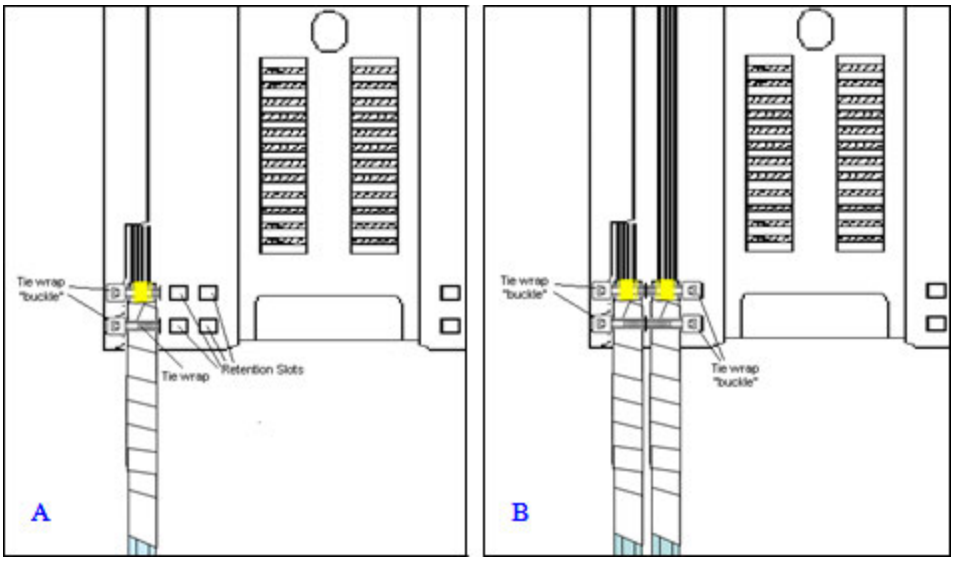

FIGURE 2K2-8. Tie wrap through aramid yarn loop.

NOTE: If the two side tabs on the splice tray were bent open, in order to attach the OFCC bundle to the outer-most location on either the "A" side or the "B" side of the splice tray, bend them back to conform to the shape of the splice tray. They should not clamp onto the fibers or the OFCC jackets.

Step 9.c. Attach 5 to 12 OFCCs to the 10-inch COTS splice tray using the "aramid yarn loop" method.

a. Perform step 9.b, sub-steps "a" through "g" for the first four OFCCs.

b. The remaining OFCCs (up to 8 OFCCs), are assembled side by side, aligning the retention slot marks (see figure 2K2-9A). The aramid yarn should be draped away from the OFCC jackets, along with the buffered fibers. Place a 5-centimeter (2-inch) strip of fiberglass cloth tape across the aligned OFCCs with the top at the retention slot mark leaving tape extending beyond the OFCCs on both sides (see figure 2K2-9B).

c. Align the top of the four OFCC bundle (from sub-step "a", above) with the taped OFCCs from sub-step "b", above. Wrap the taped OFCCs around the bundled OFCCs (see figure 2K2-9C).

d. Separate the aramid yarn from the buffered fibers, pulling the aramid yarn to the same side and back over the tape towards the OFCC jackets (see figure 2K2-9D). Ensure that the aramid yarn does not cross another fiber strand.

NOTE: To help separate the aramid yarn, hold the fibers vertical (buffered fiber above). Work away from the center and separate the aramid yarn to the outer side of the bundle, leaving the buffered fibers in the center.

e. Gather the aramid yarn and hold taut over the taped bundle and alongside the OFCC jacket. Apply a second 5-centimeter (2-inch) strip of fiberglass cloth tape 3.175 millimeters (⅛ inch) below (towards the OFCC jackets) the retention slot mark. Wrap the tape around the OFCC jackets, the bundled OFCCs, and the gathered aramid yarn (see figure 2K2-9E).

NOTE: This second strip of tape over the aramid yarn and OFCCs creates the "aramid yarn loop" that is used to secure the OFCCs to the splice tray.

f. Twist the strands of aramid yarn and pull taut alongside the OFCC jackets. Wrap a third 5-centimeter (2-inch) strip of fiberglass cloth tape around the OFCC jackets and the gathered aramid yarn, with the bottom of this third strip 7.62 centimeters (3 inches) below the retention slot mark (see figure 2K2-9F).

g. Pull the twisted strands of aramid yarn over the third strip of tape, towards the retention slot mark (see figure 2K2-9G) and wrap a fourth 5-centimeter (2-inch) strip of fiberglass cloth tape around the OFCC jackets, bundled OFCCs, and the gathered aramid yarn with the bottom of this fourth strip 12.7 millimeters (½ inch) above the bottom of the third strip (see figure 2K2-9H).

h. Trim off the excess aramid yarn protruding out from the fourth strip of tape.

i. Spiral-wrap a 20.32-centimeter (8-inch) strip of fiberglass cloth tape, starting at the top of the second strip of tape at approximately a 45-degree angle, down over the OFCCs and aramid yarn (see figure 2K2-9I). The spirals should be pulled taut and the overlap of the spirals should be between 6.35 and 9.525 millimeters (¼ and ⅜ inch) in width. At the bottom of the wrap, below the third strip of tape, the final spirals should be perpendicular to the OFCCs and should cover the aramid yarn at the third strip of tape (see figure 2K2-9J).

NOTE: If the final wraps of the spiral-wrap are not perpendicular to the OFCCs, a fifth strip of the fiberglass cloth tape, approximately 6.35 centimeters (2.5 inches) in length, can be wrapped around the bottom of the spiral-wrap.

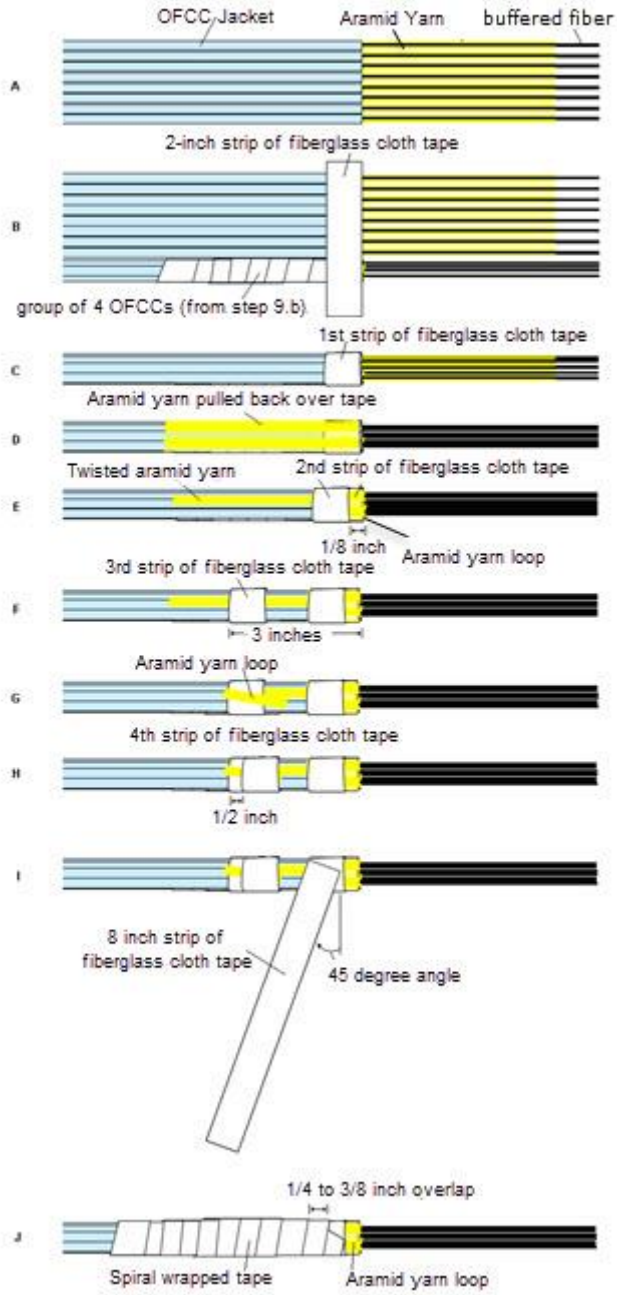

FIGURE 2K2-9. Aramid yarn loop diagrams (5 through 12 OFCCs).

j. Carefully push a tie wrap through the "aramid yarn loop" (i.e., between the aramid yarn strands and the first tape strip). When attaching the OFCC bundle to the left-most position on the "A" side of the splice tray, or the left-most position on the "B" side of the splice tray, push the tie wrap into the aramid yarn loop from the left to the right, with the "buckle" facing up (see figure 2K2-7). When attaching the OFCC bundle to the right-most position on the "A" side of the splice tray, or the right-most position on the "B" side of the splice tray, push the tie wrap into the aramid yarn loop from the right to the left, with the "buckle" facing up.

NOTE: A tie wrap should pass between the tape and the majority of the aramid yarn.

k. When attaching the OFCC bundle to the left-most position on the "A" side, or on the right-most position on the "B" side, insert the end of the tie wrap through the retention slot furthest from the tray entry point and closest to the side of the tray, loop through the retention slot next to the initial retention slot used (between the side tabs), and back up and through the tie wrap buckle. Cinch the tie wrap down around the OFCC bundle until snug and cut off the excess tie wrap (see figure 2K2-8A).

When attaching the OFCC bundle to the right-most position on the "A" side, or on the left-most position on the "B" side, insert the end of the tie wrap through the retention slot furthest from the tray entry point and closest to the side of the tray (this retention slot will be shared with tie wrap from the first OFCC bundle), loop through the retention slot furthest from the tray entry point and closest to the center of the tray, and back up and through the tie wrap buckle. Cinch the tie wrap down around the OFCC bundle until snug and cut off the excess tie wrap (see figure 2K2-8B).

NOTE: It may be necessary to bend open the two side tabs on the splice tray in order to attach the OFCC bundle to the outer-most location on either the "A" side or the "B" side of the splice tray.

NOTE: For the right-most OFCC bundle on the "A" side of the splice tray or the left-most OFCC bundle on the "B" side of the splice tray, the buckles shall be tucked as low as possible to the tray bottom so that the cover can be secured.

l. Loop a second tie wrap around the OFCC bundle, in the same direction as in sub-step "j", above, through the adjacent set of retention slots, closest to the splice tray entry point, and cinch the tie wrap down around the OFCC bundle until snug and cut off the excess tie wrap (see figure 2K2-8).

Step 10. Repeat steps 9.a, 9.b, or 9.c for any remaining OFCCs that are to be attached to the 10-inch COTS splice tray.

4.2.3 BOF entry and preparation (5-millimeter BOF tubing to splice tray). The following steps shall be performed:

Step 1. Verify that Method 2L1 is followed and that the appropriate methods (e.g., Method 2C2) for routing, forming, and shaping of the 5-millimeter BOF tube within the specific fiber optic or equipment enclosure are followed.

Step 2. Verify that Method 2M1 is followed for attaching 5-millimeter BOF tubing to the 10-inch COTS splice tray. The brass sleeve method must be used with the 10-inch COTS splice tray.

NOTE: For the 10-inch COTS splice tray, ensure that at least 83.8 centimeters (33 inches) of fiber extend past the end of the 5-millimeter BOF tube.

Step 3. Repeat steps 1 and 2 for all 5-millimeter BOF tubes to be attached to the 10-inch COTS splice tray.

Step 4. If required, install fiber identification markers on the individually blown fibers or the individual fibers that were in a BOF bundle.

NOTE: Do not shrink the fiber identification markers on the blown fibers.

4.2.4 Shaping and forming within the 10-inch splice tray. Within the 10-inch COTS splice tray, there are two sets of splice sleeve holders (see figure 2K2-3). Splices shall be installed in the upper splice sleeve holder first. Since the lengths of the fibers to be spliced are longer (81.28 centimeters [32 inches]) for the upper splice sleeve holder, in the event of repeated re-work, the lower splice sleeve holder location may be used. The length of the fibers to be spliced for the lower splice sleeve holder location shall be 50.8 centimeters (20 inches). The following steps shall be performed:

NOTE: Fibers entering the 10-inch COTS splice tray, on the left side, or "A" side, are referred to as set "A". Fibers entering on the right side of the tray, or "B" side, are referred to as set "B".

Step 1. Forming and shaping of fibers for upper splice sleeve holder of 10-inch COTS splice tray (splice holder locations 1 through 12) is as follows:

a. Select a fiber from "Set A". Verify that the length of the buffered fiber is 81.28 centimeters (32 inches), measured from the retention slot mark (see figure 2K2-4). If longer than 81.28 centimeters (32 inches), cut to length. Ensure that the fiber identification marker is installed on the (250-, 500-, or 900-micron) buffered fiber.

b. Select the corresponding fiber from "Set B". Verify that the length of the buffered fiber is 81.28 centimeters (32 inches) (measured from the retention slot mark). If longer than 81.28 centimeters (32 inches), cut to length. If required, ensure that the fiber identification marker is installed on the (250-, 500-, or 900-micron) buffered fiber.

c. Perform fusion splicing and install splices in accordance with MIL-STD-2042-5, Method 5C2.

d. Gently grasp and lift the splice at the splice protection sleeve.

e. Rotate the splice 180 degrees, causing fibers to cross and create a figure-eight pattern (see figure 2K2-10).

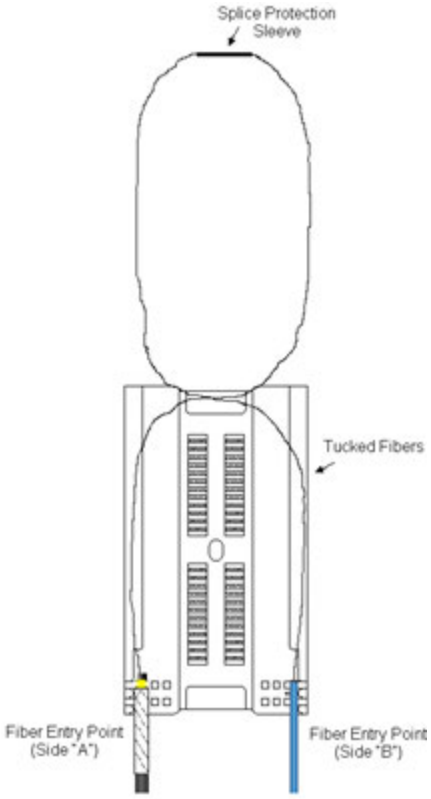

FIGURE 2K2-10. Figure-eight pattern.

f. Tuck fibers under side lips of tray.

g. Gently grasp and flip the splice toward the fiber entry point of the tray.

h. Tuck fibers under top lip of tray and ensure fibers stay tucked underneath side lips of tray (see figure 2K2-11).

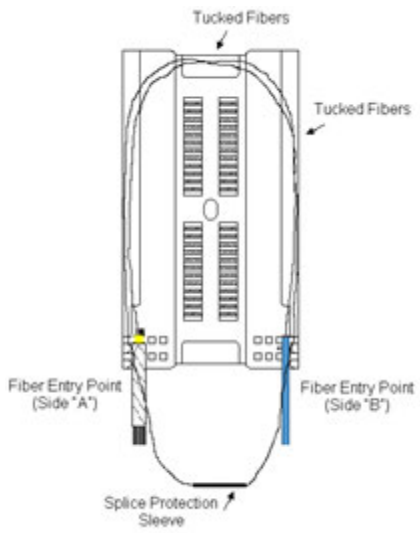

FIGURE 2K2-11. Figure routing.

i. Rotate the splice 180 degrees, causing fibers to cross and create a second figure-eight pattern.

j. Gently grasp and flip the splice forward and place in the upper splice sleeve holder location.

k. Tuck all remaining fibers under lips of the splice tray (see figure 2K2-12).

CAUTION: Great care shall be taken when performing the figure-eight method. Fiber can become pinched or exceed designated bend diameters when performing this method.

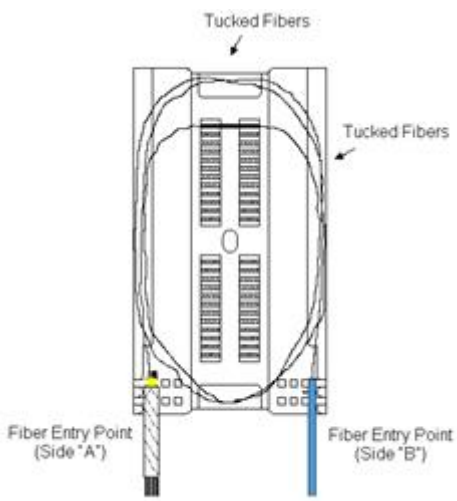

FIGURE 2K2-12. Splice installation (in upper splice sleeve holder, location 1).

l. Repeat steps 1.a through 1 k for all 81.28-centimeter (32-inch) fiber pairs.

Step 2. Forming and shaping of fibers for the lower splice sleeve holder of the 10-inch COTS splice tray (splice holder locations 13 through 24) is as follows:

a. Select a fiber from "Set A". Verify that the length of the buffered fiber is 50.8 centimeters (20 inches) (measured from the retention slot mark). If longer than 50.8 centimeters (20 inches), cut to length. If required, ensure that the fiber identification marker is installed on the (250-, 500-, or 900-micron) buffered fiber.

b. Select the corresponding fiber from "Set B". Verify that the length of the buffered fiber is 50.8 centimeters (20 inches) (measured from the retention slot mark). If longer than 50.8 centimeters (20 inches), cut to length. If required, ensure that the fiber identification marker is installed on the (250-, 500-, or 900-micron) buffered fiber.

c. Perform fusion splicing and install splices in accordance with MIL-STD-2042-5, Method 5C2.

d. Gently grasp and lift the splice at the splice protection sleeve.

e. Rotate the splice 180 degrees, causing fibers to cross and create a figure-eight pattern (see figure 2K2-13).

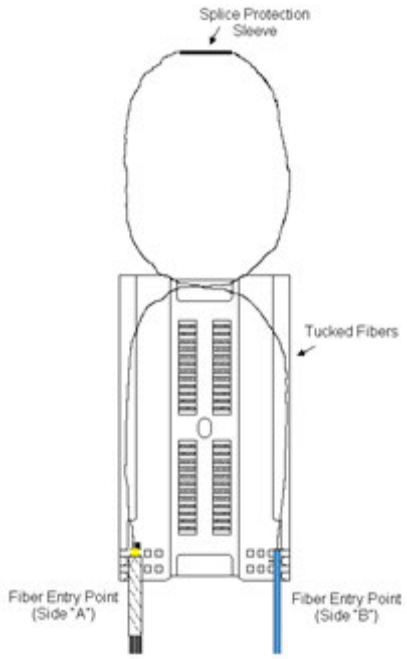

FIGURE 2K2-13. Figure-eight pattern.

f. Tuck fibers under side lips of tray.

g. Gently grasp and flip the splice forward and place in the lower splice sleeve holder location.

h. Tuck fibers under top lip of tray and ensure fibers stay tucked underneath side lips of tray (see figure 2K2-14).

CAUTION: Great care shall be taken when performing the figure-eight method. Fiber can become pinched or exceed designated bend diameters when performing this method.

NOTE: Since spliced fiber was not crossed twice (i.e., two figure eights), the "Set B" fiber will enter from the left side of the splice at the splice sleeve holder and the "Set A" fiber will enter from the right side of the splice at the splice sleeve holder.

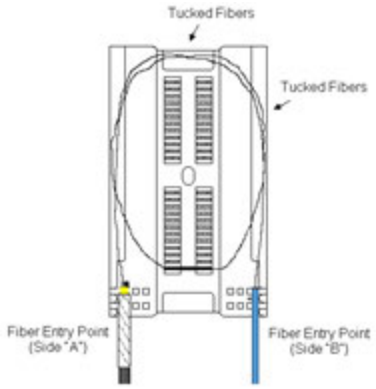

FIGURE 2K2-14. Splice installation (in lower splice sleeve holder, location 24).

i. Repeat steps 2.a though 2.h for all 50.8-centimeter (20-inch) fiber pairs.

Step 3. Ensure that polycarbonate sheet is installed over splices and tucked under side edges to hold splices in place when cover is removed. Replace the splice tray cover and place the splice tray into the proper location in the splice tray holder.

Step 4. Optional label(s) for the splices contained within the 10-inch COTS splice tray can be installed on the outside of the splice tray cover, as depicted on figure 2K2-15. Ensure that the splices within the splice tray and label on the outside of the splice tray cover have corresponding identification numbers.

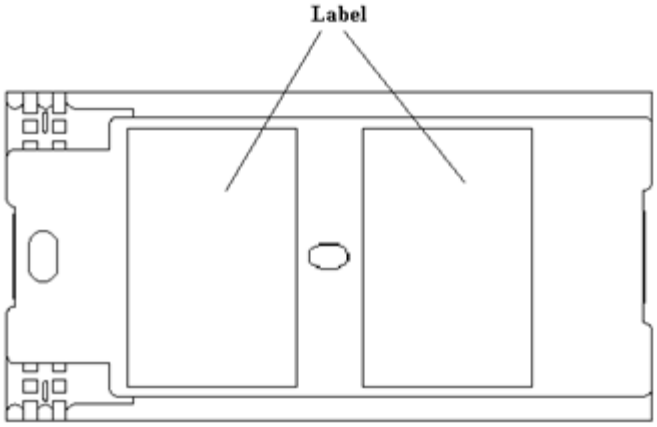

FIGURE 2K2-15. Optional labeling of 10-inch COTS splice tray.

METHOD 2K3
FUSION SPLICE TRAY ROUTING, SHAPING, AND FORMING FOR M24728/8-51 7-INCH TRAY, BRASS SLEEVE ARAMID YARN CAPTURE

1. SCOPE

1.1 Scope. This method describes the procedure for the forming, shaping, and fusion splicing of two optical fibers within an M24728/8-51 fusion splice tray using a fusion splicer in accordance with A-A-59799. This method uses an approved alternative method for attachment of OFCC and furcation legs to the splice tray entry point.

2. DOCUMENTS APPLICABLE TO METHOD 2K3

2.1 General. The documents listed in this section are specified in Method 2K3 of this standard. This section does not include documents cited in other sections of this standard or recommended for additional information or as examples. While every effort has been made to ensure the completeness of this list, document users are cautioned that they must meet all specified requirements of documents cited in Method 2K3 of this standard, whether or not they are listed.

2.2 Government documents.

2.2.1 Specifications, standards, and handbooks. The following specifications, standards, and handbooks form a part of this document to the extent specified herein. Unless otherwise specified, the issues of these documents are those cited in the solicitation or contract.

COMMERCIAL ITEM DESCRIPTIONS

A-A-59799 - Fusion Splicer and Cleaver, Optical Fiber

DEPARTMENT OF DEFENSE SPECIFICATIONS

MIL-I-19166 - Insulation Tape, Electrical, High-Temperature, Glass Fiber, Pressure-Sensitive

MIL-DTL-24728/8 - Interconnecting Box, Fiber Optic, Fusion Splice Tray and Holder Module

DEPARTMENT OF DEFENSE STANDARDS

MIL-STD-2042-5 - Fiber Optic Cable Topology Installation, Standard Methods for Surface Ships and Submarines (Connectors and Interconnections) (Part 5 of 7 Parts)

(Copies of these documents are available online at http://quicksearch.dla.mil/.)

2.3 Non-Government publications. The following documents form a part of this document to the extent specified herein. Unless otherwise specified, the issues of these documents are those cited in the solicitation or contract.

SAE INTERNATIONAL

SAE-AS23190 - Wiring, Positioning, and Support Accessories

(Copies of this document are available online at www.sae.org.)

2.4 Order of precedence. Unless otherwise noted herein or in the contract, in the event of a conflict between the text of this document and the references cited herein, the text of this document takes precedence. Nothing in this document, however, supersedes applicable laws and regulations unless a specific exemption has been obtained.

3. REQUIRED EQUIPMENT AND MATERIALS

3.1 Equipment and materials. The equipment and materials in table 2K3-I shall be used to perform this procedure. More detail on approved sources for items with reference numbers can be found on the Dahlgren shipboard fiber optics website (see 6.6). The list on which items appear is indicated by the two-letter prefix as follows:

a. TL = Recommended Tool List

b. TS = Recommended Test Equipment List

TABLE 2K3-I. Equipment and materials.

Reference #	Description	Quantity
TL-0002 or TL-0044	Isopropyl alcohol, 99% pure anhydrous or alcohol pad, sealed	1
TL-0016	Wipes (if not using pre-wetted alcohol pads)	As required
TL-0078	OFCC strip tool	1
TL-0045	Aramid yarn shears	1
TL-0071	Safety glasses	1
TL-0069	Ruler	1
TL-0079	Buffer strip tool	1
	Fusion splice tray (M24728/8-51)	1
TL-0101	Heat gun	1
	1.25- or 0.75-inch Fiberglass Cloth Tape (MIL-I-19166)	As required
	8-mm brass eyelet	As required
	10.16-cm (4-inch) long self-cinching straps (SAE-AS23190)	As required
TL-0134	BOF duct coupling tool	1

NOTES:

1. Products to be considered for addition to the recommended tool or test equipment shall obtain approval as specified (see 6.5).
2. CAUTION: Throughout the fabrication process, cleanliness is critical to obtaining a high quality optical connection. Make sure that your hands and the work area are as clean as possible to minimize the ingress of dirt into the splices.

4. PROCEDURES

4.1 Safety summary. The following safety procedures shall be observed:

a. Wear safety glasses at all times when handling bare fibers.

b. Do not touch the ends of bare fiber. Wash hands thoroughly after handling bare fibers.

c. When visually inspecting an optical fiber, do not stare into the end of a fiber connected to a laser source or LED.

d. Observe warnings and cautions on equipment and materials.

4.2 Procedure.

4.2.1 Cable entry and preparation. The following steps shall be performed:

Step 1. Verify that the procedures of Methods 2A1, 2B1, 2G1, or 2H1 and the fiber blowing process (if required) have been completed.

Step 2. When installing BOF individual fibers or BOF bundles, verify the procedures of Method 2F2, 2F3, or 2M1 have been completed. Verify that the furcation legs (if used) within the FOICB are routed in accordance with Method 2C1.

Step 3. When installing M85045 conventional cable, verify the procedures of Method 2C1 or Method 2C2 for routing, forming, and shaping within the FOICB have been completed.

4.2.2 Shaping and forming in the splice tray. The following steps shall be performed:

Step 1. Bring the OFCC or furcation legs (from hereforth OFCC) to the splice tray where the optical fibers will be spliced (a maximum of 6 per assembly, 12 fibers total). Place a mark on the OFCC where the fiber enters the splice tray. Place a second mark on the OFCC at the retention slot in the splice tray farthest away from the entry point (see figure 2K3-1).

NOTE: Ensure 63.5 centimeters (25 inches) of fiber extend past the splice tray entry point.

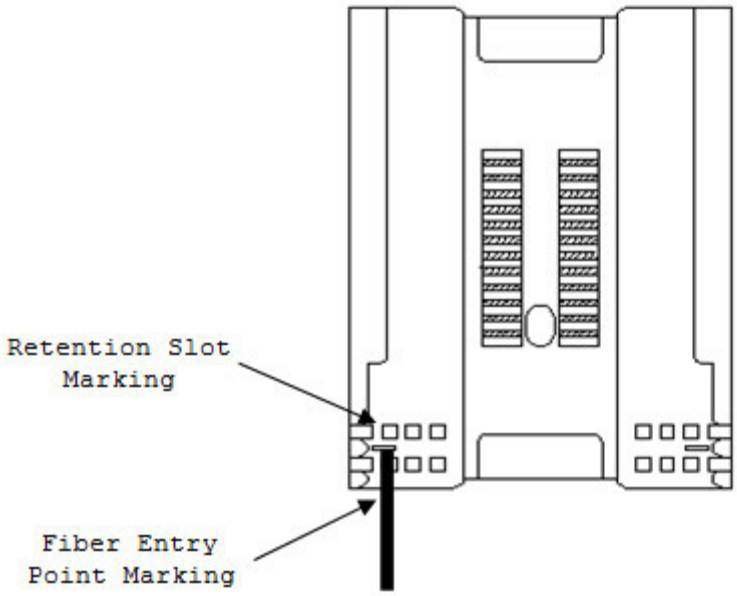

FIGURE 2K3-1. OFCC initial marking.

Step 2. Install OFCC fiber identification markers on the OFCCs entering and exiting the splice tray (see figure 2K3-2).

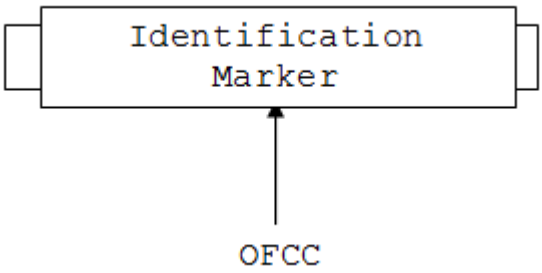

FIGURE 2K3-2. Installing ID marker.

Step 3. There are two sets of fibers to be spliced, set "A" (input) and set "B" (output). Set "A" fibers are fusion spliced to set "B" fibers. From the retention slot mark (see step 1) on the OFCC, measure out 15.24 centimeters (6 inches) on set "A" and mark that point. From the retention slot mark (from step 1) on the OFCC, measure out 63.5 centimeters (25 inches) and mark that point. Cut off any remaining fiber past the 63.5-centimeter (25-inch) mark (see figure 2K3-3). Remove the OFCC jacket and aramid yarn past the 15.24-centimeter (6-inch) mark. Slide a spare 3.18-centimeter (1.25-inch) piece of 8-millimeter BOF (micro duct) tubing over the exposed fiber buffers and down past the retention mark slot mark. Remove the remaining OFCC jacket past the retention slot mark, leaving 15.24 centimeters (6 inches) of aramid yarn in place. Repeat this process for all remaining fibers in both sets "A" and "B" (see figure 2K3-4).

NOTE: The optimum way to remove a 2-millimeter OFCC jacket is to ring-cut the jacket with the OFCC stripper and pull the jacket off by hand. Pushing off the OFCC jacket with a tightly held OFCC stripper can lead to fiber breakage.

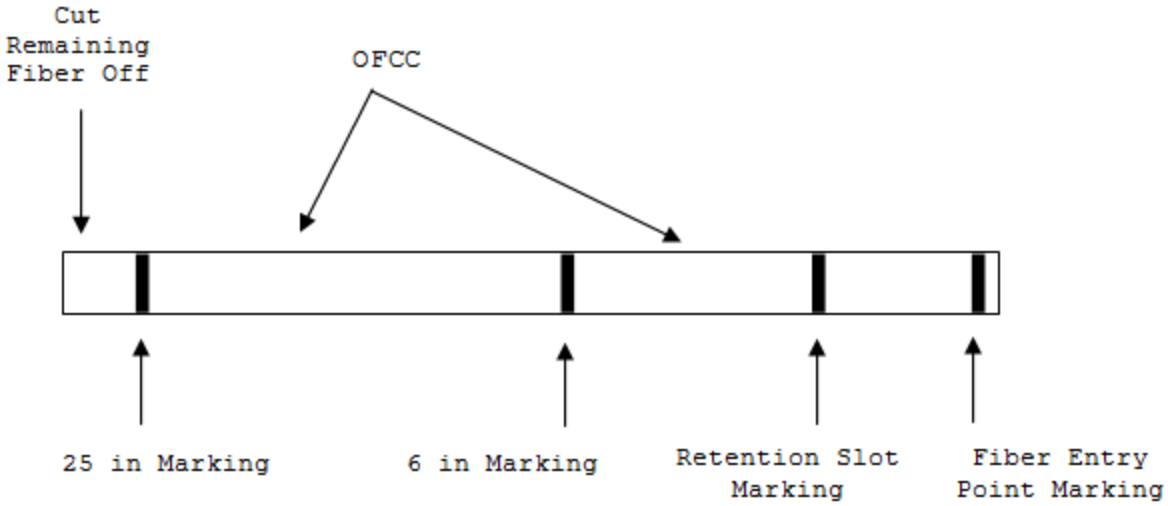

FIGURE 2K3-3. OFCC final marking.

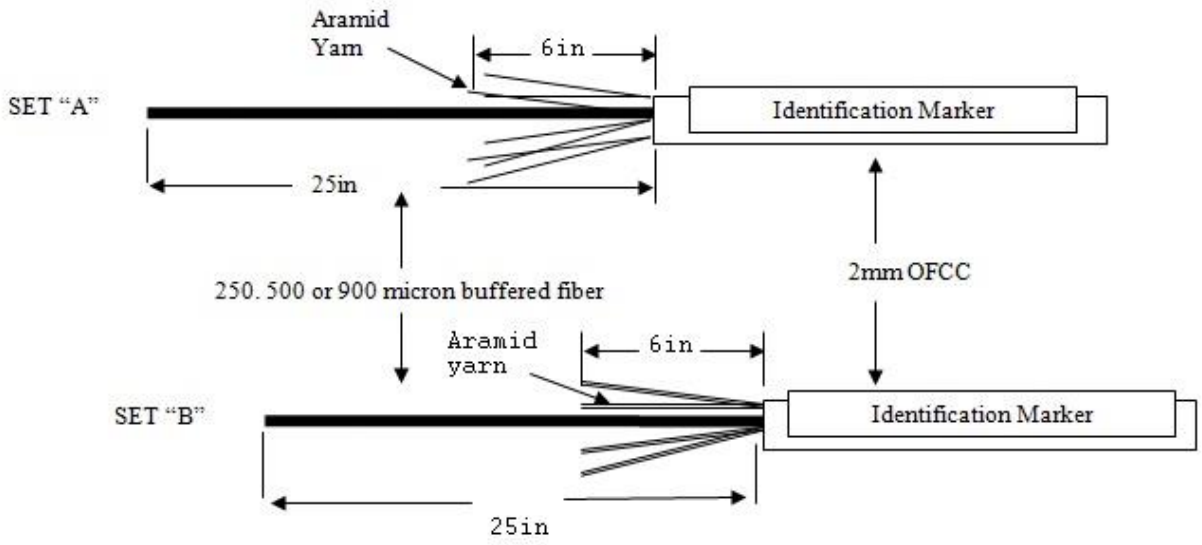

FIGURE 2K3-4. Diagram of 63.5-centimeter (25-inch) strip length with aramid yarn.

Step 4. Fiber sets "A" (input) and "B" (output) shall enter the splice tray at opposite corners of the same end of the splice tray. Set "A" should enter on the left side of the tray and set "B" should enter on the right side of the tray. Approximately 19 millimeters (0.75 inch) of the 8-millimeter BOF tube section shall enter the tray at each corner (see figure 2K3-5).

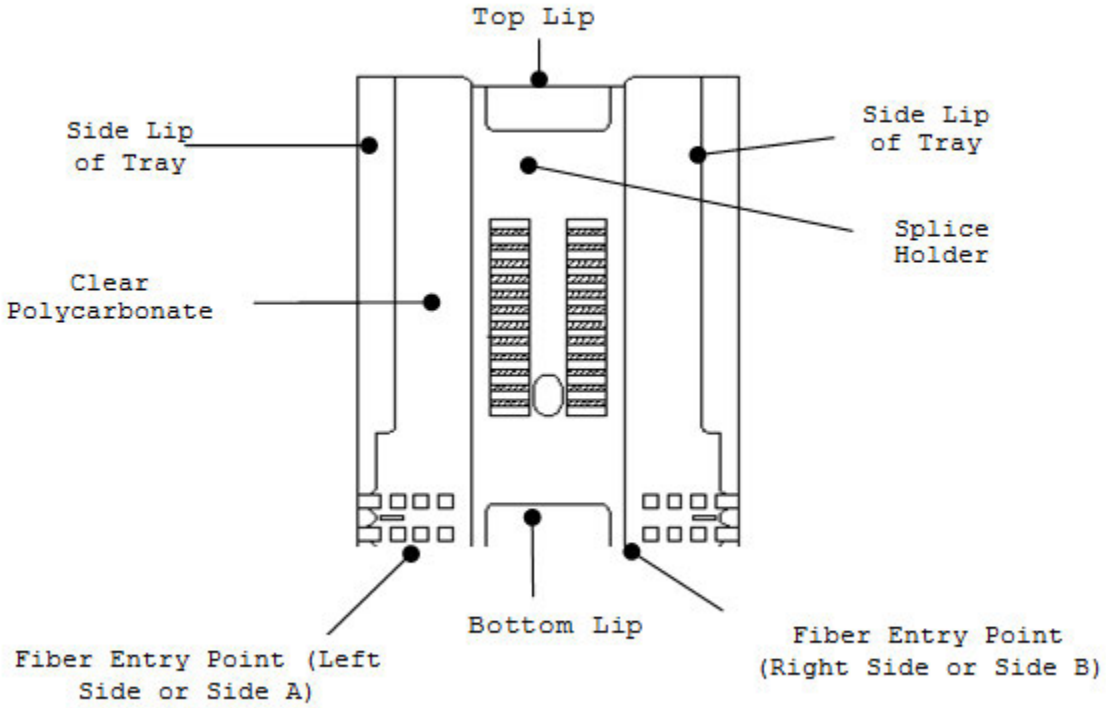

FIGURE 2K3-5. Diagram of splice tray.

Step 5. Separate the aramid yarn from the buffered fiber, ensuring it does not cross another fiber strand and arrange it away from the center of the bundle to avoid tangling (see figure 2K3-6).

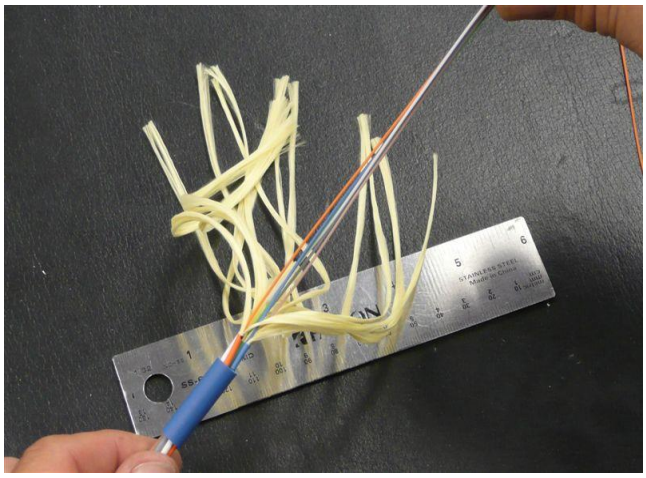

FIGURE 2K3-6. Separation of the aramid yarn.

Step 6. Install a brass eyelet over the grouped 900 micron fibers (see figure 2K3-7).

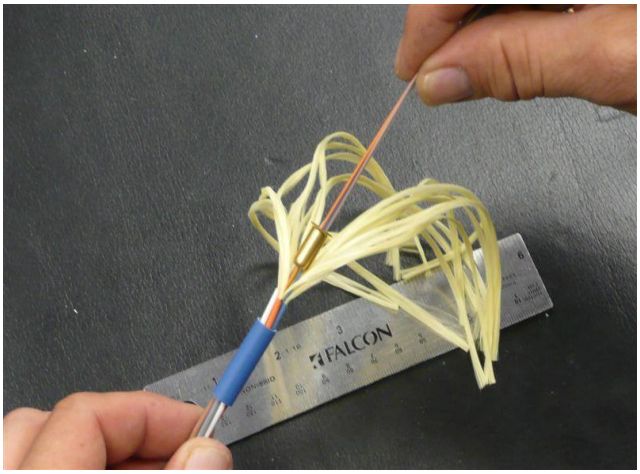

FIGURE 2K3-7. Installation of the brass eyelet.

Step 7. Slide the section of 8-millimeter BOF tube up to the edge of the stripped OFCCs so the jackets are no longer visible (see figure 2K3-8).

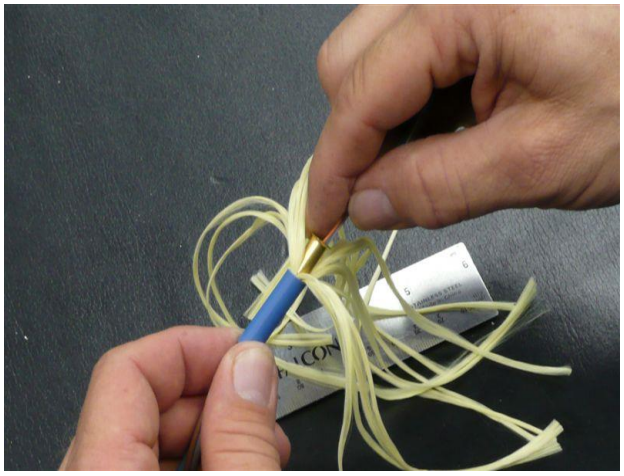

FIGURE 2K3-8. Continued installation of the brass eyelet.

Step 8. Press in the brass eyelet using a BOF duct coupling tool (see figure 2K3-9).

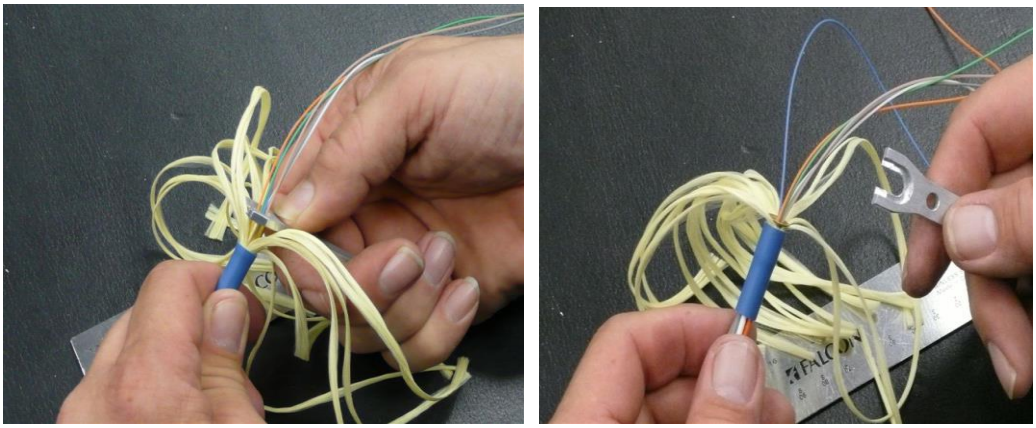

FIGURE 2K3-9. Insertion of the brass eyelet into the BOF tubing.

Step 9. Fold the aramid yarn back over the 8-millimeter BOF tube section and secure it with a 6.35- to 7-centimeter (2.5- to 2.75-inch) length piece of 1.25 inch wide fiberglass cloth tape (see figure 2K3-10).

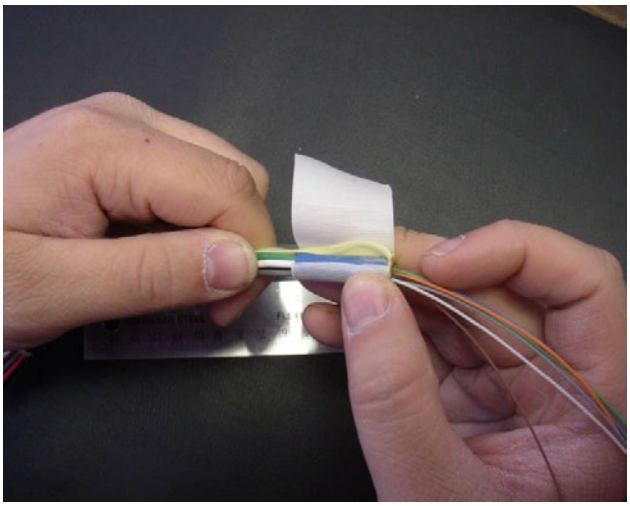

FIGURE 2K3-10. Capturing the aramid yarn with fiberglass tape.

Step 10. Trim off the excess aramid yarn. Cut flush with the back edge of the 8-millimeter BOF tube section (see figure 2K3-11).

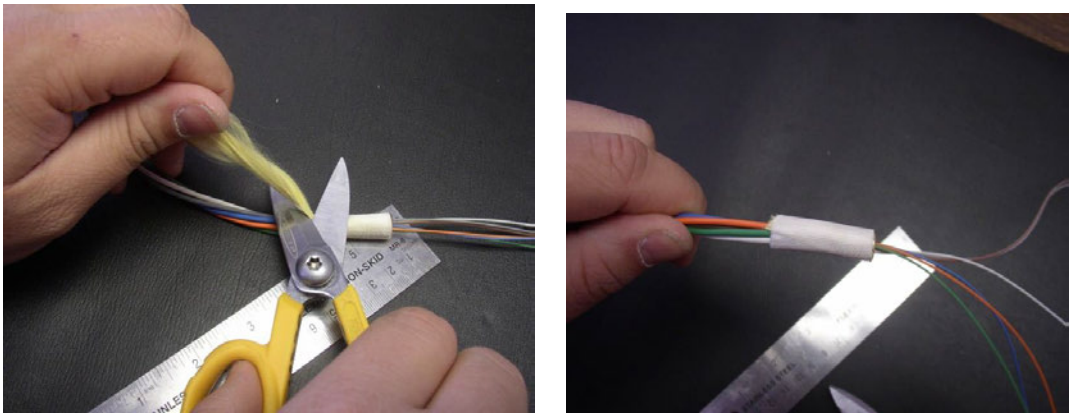

FIGURE 2K3-11. Cutting back aramid yarn.

Step 11. Attach the completed assembly to the splice tray using the supplied tie wraps (see figure 2K3-12).

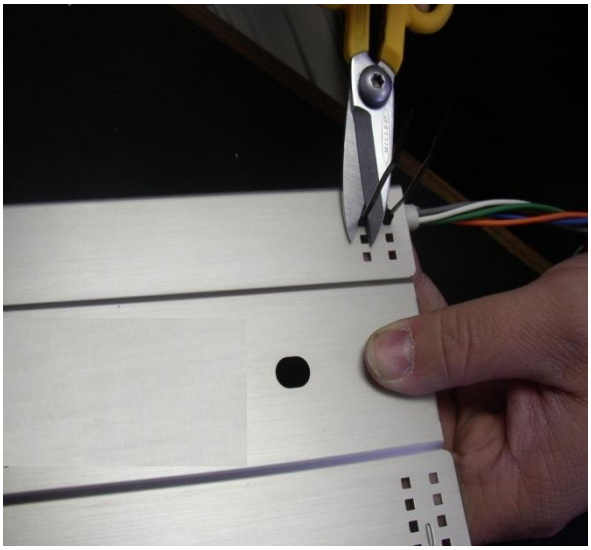

FIGURE 2K3-12. Securing the BOF tube assembly to the splice tray with tie wraps.

NOTE: Ensure that the permanent tie wraps have the buckle on the back/outside of the splice tray.

Step 12. If required, install identification markers on the buffered fibers inside the tray (see figure 2K3-13).

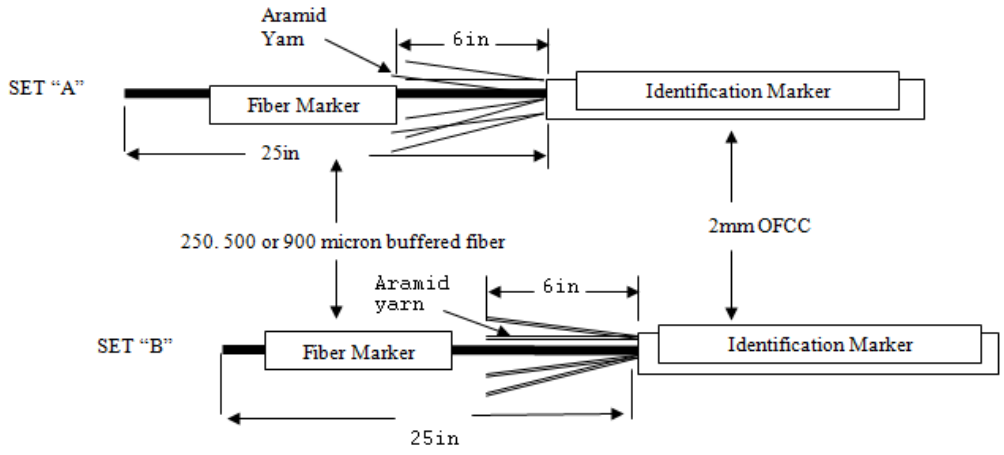

FIGURE 2K3-13. Fiber markers.

Step 13. Repeat steps 3 through 12 for the second set of up to 6 fibers to enter the tray.

Step 14. Perform fusion splicing and install splices in accordance with MIL-STD-2042-5, Method 5C2.

Step 15. Gently grasp and lift splice(s) at splice protection sleeve.

Step 16. Rotate splices 180 degrees, causing fibers to cross and create a figure-eight pattern (see figure 2K3-14).

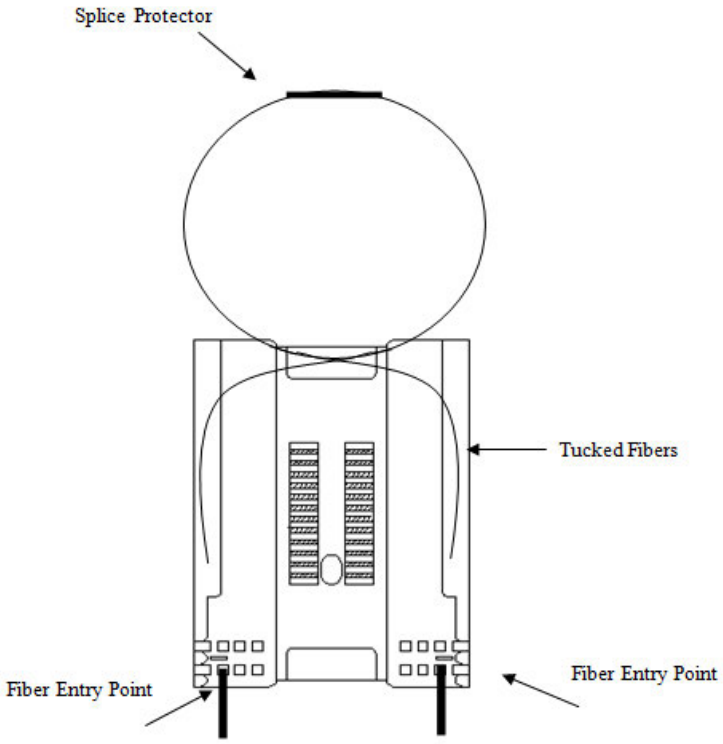

FIGURE 2K3-14. Figure-eight pattern.

Step 17. Tuck fibers under side lips of tray.

Step 18. Gently grasp and flip splice(s) toward the fiber entry point of the tray (see figure 2K3-15).

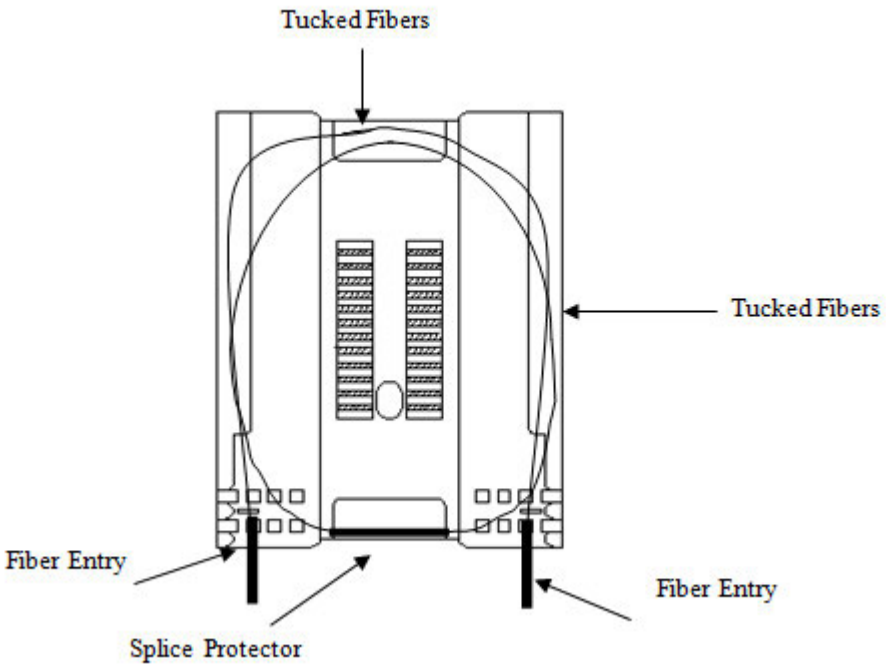

FIGURE 2K3-15. Fiber tucking.

Step 19. Tuck fibers under top lip of tray and ensure fibers stay tucked underneath side lips of tray.

Step 20. Rotate splices 180 degrees, causing fibers to cross and create a figure-eight pattern.

Step 21. Place splice(s) in designated splice holder location.

Step 22. Tuck all remaining fibers under lips of the splice tray (see figure 2K3-16). An example of a completed splice tray is shown on figure 2K3-17.

CAUTION: Great care shall be taken when performing the figure-eight method. Fiber can become pinched or exceed designated bend diameter when performing this method.

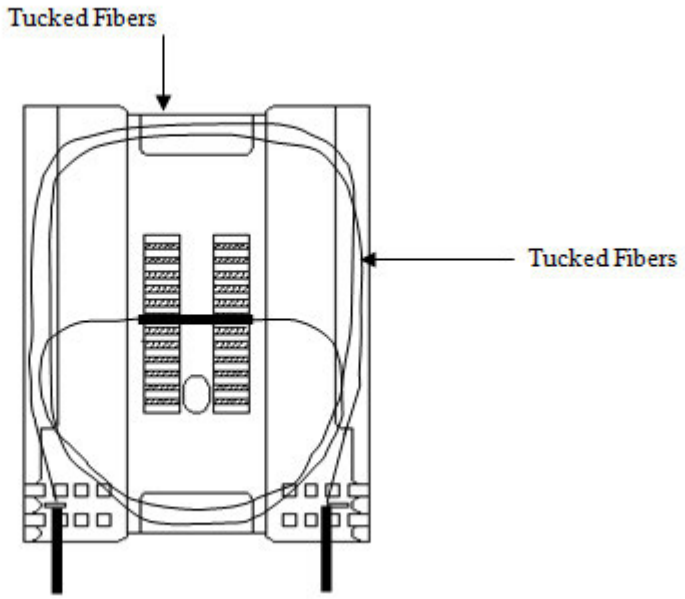

FIGURE 2K3-16. Splice installation.

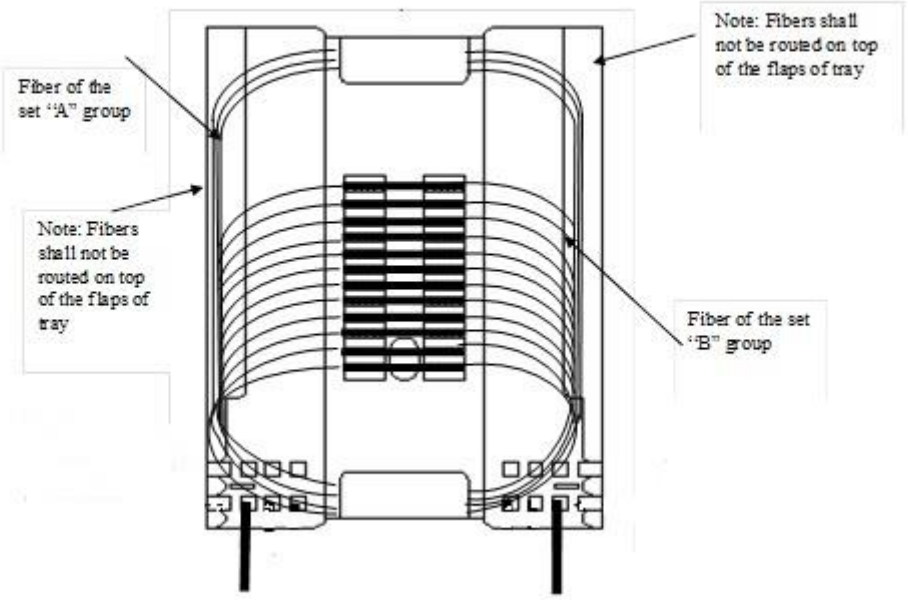

FIGURE 2K3-17. Finished splice tray.

Step 23. When all fusion splicing is complete and all trays have been returned into the splice tray holder module, replace both splice tray holder side arm brackets on the splice tray holder module. Tighten both bolts on each splice tray holder side arm bracket.

NOTE: Aligning all of the bolts can be difficult, as the side arm brackets intentionally fit tightly around the splice trays. The best known practice is to align and lightly tighten all bolts to ensure all bolts are engaged before performing the final tightening of all bolts.

Step 24. Replace the splice tray holder lid and fully tighten all four bolts.

NOTE: Aligning all of the bolts can be difficult as the lids intentionally fit tightly on the splice trays. The best known practice is to align and lightly tighten all bolts to ensure all bolts are engaged before performing the final tightening of all bolts.

4.2.3 Splice tray labeling. An optional label for the splices contained within the splice tray can be installed on the outside of the splice tray cover (see figure 2K3-18). Ensure that the splices within the splice tray and label on the outside of the splice tray cover have corresponding identification numbers.

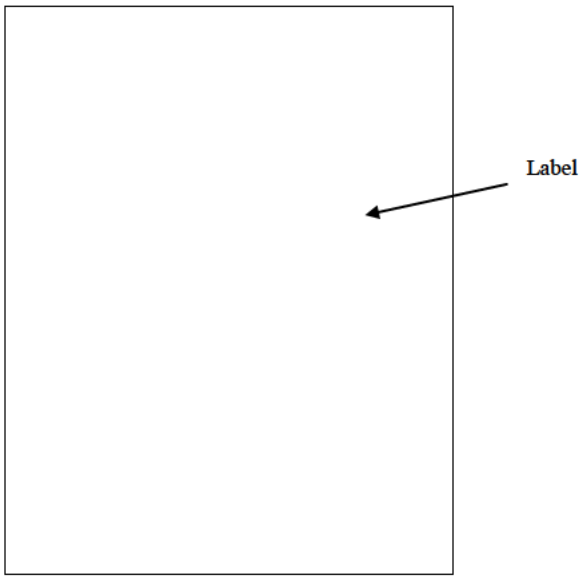

FIGURE 2K3-18. Example of labeling.

METHOD 2L1
EIGHT-TO-FIVE-MILLIMETER (8-TO-5-MILLIMETER) BOF TUBE TRANSITION WITHIN PROTECTIVE ENCLOSURES

1. SCOPE

1.1 Scope. This method describes the procedures for transitioning from 8-millimeter BOF tubes to 5-millimeter BOF tubes. Transition to 5-millimeter tube shall only be used to permit transition for improved routing and immediate termination. Transitioning from 8-millimeter to 5-millimeter tubing can impact blowing operations. It may be necessary to perform fiber blowing operations prior to attaching 5-millimeter tubing to blow paths. This transition shall take place in protective enclosures (e.g., FOICBs).

2. DOCUMENTS APPLICABLE TO METHOD 2L1

2.1 General. The documents listed in this section are specified in Method 2L1 of this standard. This section does not include documents cited in other sections of this standard or recommended for additional information or as examples. While every effort has been made to ensure the completeness of this list, document users are cautioned that they must meet all specified requirements of documents cited in Method 2L1 of this standard, whether or not they are listed.

2.2 Government documents.

2.2.1 Specifications, standards, and handbooks. The following specifications, standards, and handbooks form a part of this document to the extent specified herein. Unless otherwise specified, the issues of these documents are those cited in the solicitation or contract.

COMMERCIAL ITEM DESCRIPTIONS

A-A-59728 - Plug, Tube Fitting, Blown Optical Fiber

A-A-59730 - Plugs, Tapered Tube, Blown Optical Fiber

A-A-59731 - Tube Fittings, Blown Optical Fiber

DEPARTMENT OF DEFENSE STANDARDS

MIL-STD-2042-6 - Fiber Optic Cable Topology Installation Standard Methods for Surface Ships and Submarines (Tests) (Part 6 of 7 Parts)

(Copies of these documents are available online at http://quicksearch.dla.mil/).

2.3 Non-Government publications. The following documents form a part of this document to the extent specified herein. Unless otherwise specified, the issues of these documents are those cited in the solicitation or contract.

SAE INTERNATIONAL

SAE-DTL-23053/5 - Insulation Sleeving, Electrical, Heat Shrinkable, Polyolefin, Flexible, Crosslinked

(Copies of this document are available online at www.sae.org.)

2.4 Order of precedence. Unless otherwise noted herein or in the contract, in the event of a conflict between the text of this document and the references cited herein, the text of this document takes precedence. Nothing in this document, however, supersedes applicable laws and regulations unless a specific exemption has been obtained.

3. REQUIRED EQUIPMENT AND MATERIALS

3.1 Equipment and materials. The equipment and materials in table 2L1-I shall be used to perform this procedure. More detail on approved sources for items with reference numbers can be found on the Dahlgren shipboard fiber optics website (see 6.6). The list on which items appear is indicated by the two-letter prefix as follows:

a. TL = Recommended Tool List

b. TS = Recommended Test Equipment List

TABLE 2L1-I. Equipment and materials.

Reference #	Description	Quantity
	Clear BOF tubing (8-mm OD), maximum length of 7.62 cm (3 inches) (Connective Solutions P/N NYT-x.xx, where "x.xx" represents the length in inches, or equal [see 4.6])	As required
	BOF tubing (5-mm OD), (General Cable P/N FC9700008, or equal [see 4.6])	As required
	2-mm (0.079-inch) filtered polyacrylamide water-blocking crystals, 0.5-gram (0.017-ounce) packet (KITCO P/N 0745-2168, or equal [see 4.6])	As required
TL-0002 or TL-0044	Isopropyl alcohol, 99% pure anhydrous or alcohol pad, sealed	1
TL-0016	Wipes (if not using pre-wetted alcohol pads)	As required
	Reducer coupler, 8-to-5-mm (A-A-59731-R)	As required
	Tee tube coupler (A-A-59731-T-8 or AA-59731-TS-8)	As required
	BOF tube fitting plug, 8 mm (A-A-59728-TFP-8)	As required
	8-mm tapered tube plug, for six-fiber bundle or two to six individual fibers (A-A-59730-TTP-2)	As required
	8-mm tapered tube plug, for 12- or 18-fiber bundle or 8 to 12 individual fibers (A-A-59730-TTP-3)	As required
	Adhesive and sealant tape (Raychem SFTS-1, or equal [see 4.6])	As required
TL-0114	Clear jacket stripper (20 gauge for 6-fiber bundles)	1
TL-0081	Bundle jacket stripper (18 gauge for 6-fiber bundles)	1
TL-0113	Bundle jacket stripper (12 gauge for 12- and 18-fiber bundles)	1
TL-0130	Tube cutter	1
TL-0069	Ruler	1
	Utility knife or scissors	1
	Heat shrink tubing (SAE-DTL-23053/5)	As required
TL-0071	Safety glasses	1
	Distilled water	As required
TL-0013	Canned air	As required
NOTE: Products to be considered for addition to the recommended tool or test equipment shall obtain approval as specified (see 6.5).		

4. PROCEDURES

4.1 Safety summary. The following safety procedures shall be observed:

a. Wear safety glasses at all times when handling bare fibers.

b. Do not touch the ends of bare fiber. Wash hands thoroughly after handling bare fibers.

c. When visually inspecting an optical fiber, do not stare into the end of a fiber connected to a laser source or LED.

d. Observe warnings and cautions on equipment and materials.

4.2 Eight-to-five-millimeter (8-to-5-millimeter) BOF tube transition procedure. The following steps shall be performed:

NOTE: Keep BOF tube couplers and the ends of BOF tubes clean and free of contaminants.

NOTE: BOF tube couplers may be cleaned using distilled water and blown dry with air. Do not clean or soak BOF tube couplers in alcohol or other cleaning agents. BOF tube couplers can be permanently damaged by exposure to alcohol and cleaning agents.

NOTE: Previously used BOF tube couplers may not adequately seal BOF tubes. When installing BOF cabling, always use new BOF tube couplers.

CAUTION: Disengaging BOF tube couplers between BOF tubes containing optical fibers may damage/break the optical fibers contained within the BOF tubes.

CAUTION: Do not exceed a bend diameter of 13 centimeters (5 inches) for 8-millimeter BOF tubes. Eight-millimeter (8-millimeter) BOF tubes may collapse at diameters less than 13 centimeters (5 inches).

CAUTION: Do not exceed a bend diameter of 10 centimeters (4 inches) for 5-millimeter BOF tubes. Five-millimeter (5-millimeter) BOF tubes may collapse at diameters less than 10 centimeters (4 inches).

Step 1. Identify the two BOF tubes (one 8-millimeter BOF tube and one 5-millimeter BOF tube) to be interconnected. Visually examine the BOF tubes for cuts or kinks before continuing.

Step 2. Ensure that the selected 8-millimeter BOF tubing contains the unshrunk heat shrink tubing with the tube identification, approximately 10 centimeters (4 inches) away from the tube end. Visually verify that the end of the 8-millimeter BOF tube is cut perpendicular to the tube length. Clean the end of the BOF tube with a wipe dampened with alcohol and blow dry as necessary.

CAUTION: Do not heat tube identification labels on 8-millimeter BOF tubes.

Step 3. Perform the 8-millimeter BOF tube to 5-millimeter BOF tube transition. Perform Method 2L1, 4.2.1.

Step 4. Repeat steps 1 through 3 until all required 8-to-5-millimeter BOF tube interconnections have been accomplished.

4.2.1 Eight-to-five-millimeter (8-to 5-millimeter) BOF tube transition using clear BOF tubing, BOF tee tube coupler, and water-blocking material. The following steps shall be performed:

Step 1. Slide BOF tee tube coupler onto the 8-millimeter BOF tube and firmly seat the coupler on the tube. Apply a light load of approximately 22 Newtons (5 pounds) between the tube and the coupler to ensure the coupler is fully engaged onto the tube.

Step 2. Visually verify that the ends of the clear BOF tubing are cut perpendicular to the tube length. Clean the ends of the clear BOF tube with a wipe dampened with alcohol and blow dry as necessary.

Step 3. Insert the clear BOF tubing into the BOF tee tube coupler and firmly seat the tube into the coupler. Apply a light load of approximately 22 Newtons (5 pounds) between the tube and the coupler to ensure the coupler is fully engaged onto the tube.

Step 4. Insert the BOF tube fitting plug into the tee end of the 8-millimeter tee tube coupler. The finished configuration is shown on figure 2L1-1.

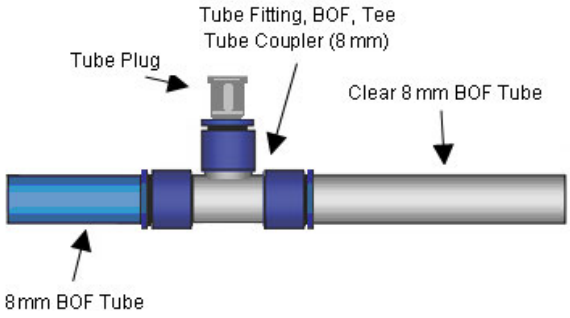

FIGURE 2L1-1. BOF tee tube coupler with clear BOF tube.

Step 5. Perform the BOF cable pressurization test in accordance with MIL-STD-2042-6, Method 6I1.

Step 6. Disengage the BOF tee tube coupler (and clear BOF tubing) from the 8-millimeter BOF tube and remove it.

Step 7. Perform the blowing operation for this 8-to-5-millimeter BOF tube interconnection path.

NOTE: When blowing individual fibers or BOF bundles, ensure that enough fiber is blown to account for the length of the 5-millimeter BOF tube, the fiber length required for the various couplers and clear BOF tubing, the fiber length required for splicing, and any additional length required for fiber identification and slack margin.

NOTE: Ensure at least 84 centimeters (33 inches) of fiber extends beyond the end of the 5-millimeter tube for connections to 10-inch splice trays. Ensure at least 63.5 centimeters (25 inches) of fiber extend beyond the end of the 5-millimeter tube for connections to 7-inch splice trays.

NOTE: Alternatively, if multiple 8-to-5-millimeter BOF tube interconnection paths are to be made, each of the tube transitions can be completed up to this point (steps 1 through 7) and then all blowing operations can be performed at one time. This method can then be resumed for each interconnection at this point.

Step 8. Using scissors, trim back the individual blown fibers or the BOF bundle that exits the 8-millimeter BOF tube to the appropriate length required, taking into account the length of the 5-millimeter BOF tube, the fiber length required for the various couplers and clear BOF tubing, the fiber length required for connectorizing or splicing, and any additional length required for fiber identification and slack margin.

Step 9. If individual fibers were blown through the BOF cable path, perform steps 9.a through 9.e. If a BOF bundle was blown, skip to step 10.

a. If individual fibers were blown, work a small amount of sealant tape around the individual fibers, approximately 25 millimeters (1 inch) from the open end of the BOF tube.

b. Place the appropriate sized tapered tube plug (see table 2L1-I) around the individual fibers and sealant tape (see figure 2L1-2).

NOTE: The tapered tube plug should be oriented with the tapered end of the plug towards the open end of the BOF tube.

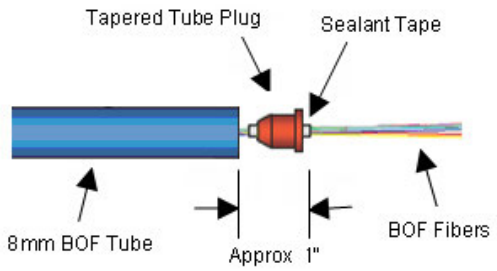

FIGURE 2L1-2. Applying the tapered tube plug onto the sealant tape and individual blown fibers.

c. Push the tapered tube plug (and individual blown fibers) into the open end of the BOF tube until the plug is fully inserted into the tube (see figure 2L1-3).

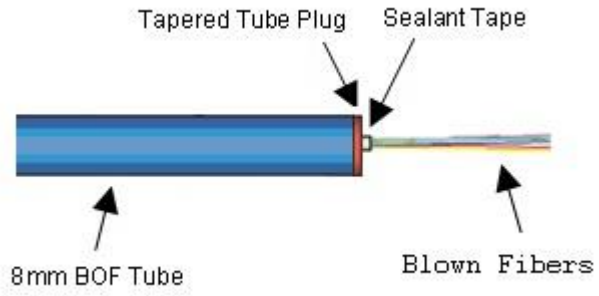

FIGURE 2L1-3. First tapered tube plug installed with individual blown fibers.

d. The flange on the tapered tube plug should be even with the outer diameter of the BOF tube. If necessary, trim the flange to the outer diameter of the tube using scissors or another appropriate cutting tool.

e. Skip to step 11 to complete the transition.

Step 10. If a BOF bundle was blown through the BOF cable path, perform steps 10.a through 10 k. Otherwise, skip to step 11.

a. Mark the bundle jacket approximately 25 millimeters (1 inch) from the open end of the BOF tube (see figure 2L1-4).

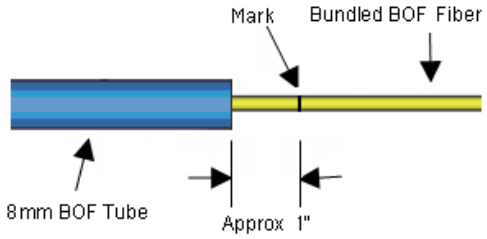

FIGURE 2L1-4. Bundle mark.

NOTE: Do not pull the slack fiber bundle out of the BOF tube while breaking out the bundled fibers. If the slack fiber bundle is accidentally pulled out of the BOF tube, re-establish the bundle to its original position (using the 25-millimeter [0.984-inch] mark on the bundle jacket as an index) and continue the procedure.

b. Using the bundle jacket stripper, remove the exposed bundle jacket in approximately 160-millimeter (6-inch) lengths back to the mark.

NOTE: Once a short length of the bundle jacket has been removed, the remaining length can be torn off the bundle by hand.

c. Optional step for 18-fiber bundles: Using the scissors, cut off approximately 100 millimeters (4 inches) of the fibers from one six-fiber subunit. Then, cut off approximately 200 millimeters (8 inches) from a different six-fiber subunit.

NOTE: For 18-fiber bundles, fibers of the same color are contained in each six-fiber subunit. The sixth fiber color in each of the three six-fiber subunits identifies the particular subunit. During the installation process, it is important to know the six-fiber subunit that each fiber comes from. One method to uniquely mark the fibers of each six-fiber subunit is to make the fibers of each subunit a slightly different length. See table 2F3-II for fiber color coding.

d. Using the clear jacket stripper, remove approximately 80 millimeters (3 inches) of the clear, inner jacket from the end of each six-fiber subunit.

NOTE: If the clear jacket stripper does not bite into the clear, inner jacket, position the clear jacket stripper at a 30- to 40-degree angle to increase its bite.

e. Find the ripcord from among the six fibers in the subunit. Ensure that it is not crossed with any of the fibers. While holding the group of fibers in one hand, pull the ripcord along the bundle with the other hand. Pull the ripcord until it reaches the mark on the bundle jacket.

NOTE: The ripcord and fibers spiral along the bundle length. Take care to follow the spiral when pulling the ripcord.

f. Starting at the end of the fiber bundle subunit, carefully pull the group of fibers from the clear, inner jacket.

g. Using the scissors, carefully cut away the ripcord and the clear, inner jacket.

h. Repeat steps 10.e through 10.g for remaining subunits within the bundle.

i. Place the appropriate sized tapered tube plug (see table 2L1-I) around the exposed bundle jacket approximately 25 millimeters (1 inch) from the open end of the BOF tube (see figure 2L1-5).

NOTE: The tapered tube plug should be oriented with the tapered end of the plug towards the open end of the BOF tube.

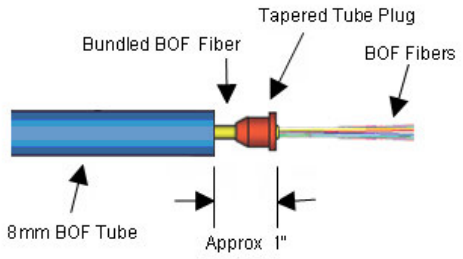

FIGURE 2L1-5. Applying the tapered tube plug onto the fiber bundle.

j. Push the tapered tube plug (and BOF bundle) into the open end of the BOF tube until the plug is fully inserted into the tube (see figure 2L1-6).

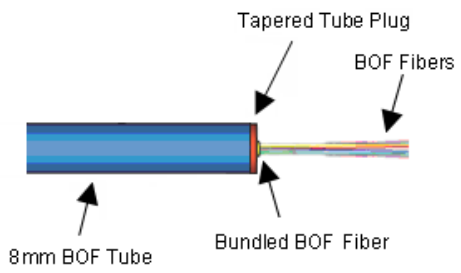

FIGURE 2L1-6. First tapered tube plug installed with BOF bundle.

k. The flange on the tapered tube plug should be even with the outer diameter of the BOF tube. If necessary, trim the flange to the outer diameter of the tube using scissors or another appropriate cutting tool.

Step 11. Carefully feed the blown fibers into the open end of the BOF tee tube coupler and through the clear BOF tubing (see figure 2L1-7).

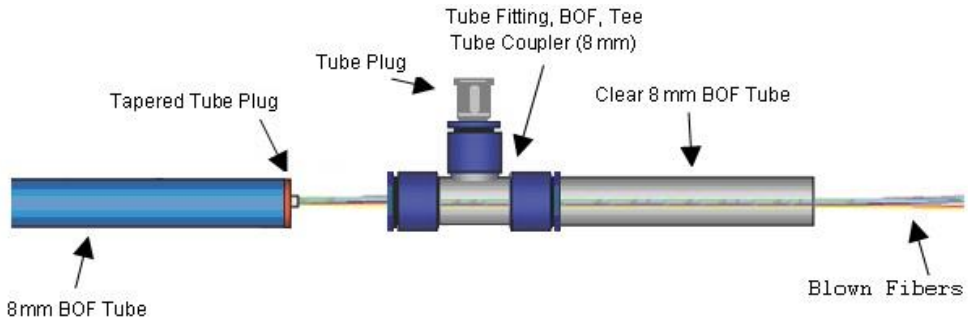

FIGURE 2L1-7. Feeding blown fibers through BOF tee tube coupler (and clear BOF tubing).

Step 12. Slide the BOF tee tube coupler onto the 8-millimeter BOF tube and firmly seat the coupler on the tube. Apply a light load of approximately 22 Newtons (5 pounds) between the tube and the coupler to ensure the coupler is fully engaged onto the tube.

Step 13. Place the appropriate sized tapered tube plug (see table 2L1-I) around the exposed blown fibers approximately 12 millimeters (0.5 inch) from the open end of the clear BOF tube (see figure 2L1-8).

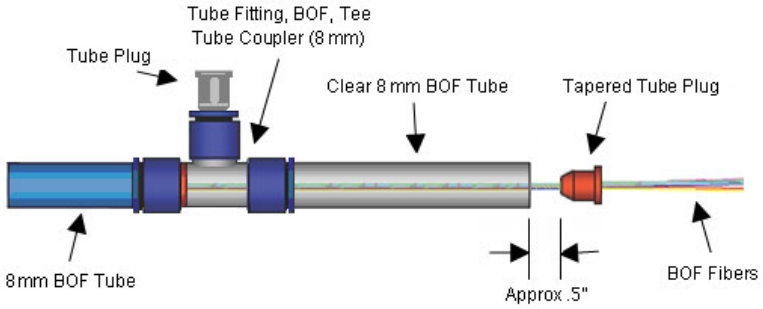

FIGURE 2L1-8. Applying second tapered tube plug onto blown fibers.

NOTE: The tapered tube plug should be oriented with the tapered end of the plug towards the clear 8-millimeter tube.

Step 14. Holding the blown fibers outside of the tapered tube plug, carefully slide the tapered tube plug into the clear BOF tube until the plug is fully inserted into the tube.

NOTE: This step should remove the slack in the blown fibers between the two tapered tube plugs.

Step 15. The flange on the tapered tube plug should be even with the outer diameter of the clear 8-millimeter tube. If necessary, trim the flange to the outer diameter of the tube using scissors or another appropriate cutting tool.

Step 16. Ensure that the selected 5-millimeter BOF tubing contains the heat shrink tubing with the tube identification. It is recommended that this tube identification appears approximately 10 centimeters (4 inches) away from both ends of the 5-millimeter BOF tube. Visually verify that both ends of the 5-millimeter BOF tube are cut perpendicular to the tube length. Clean the ends of the BOF tube with a wipe dampened with alcohol and blow dry as necessary.

Step 17. Insert the 5-millimeter BOF tube into the BOF 8-to-5-millimeter reducer coupler and firmly seat the tube into the reducer coupler (see figure 2L1-9). Apply a light load of approximately 22 Newtons (5 pounds) between the tube and the coupler to ensure the coupler is fully engaged onto the tube.

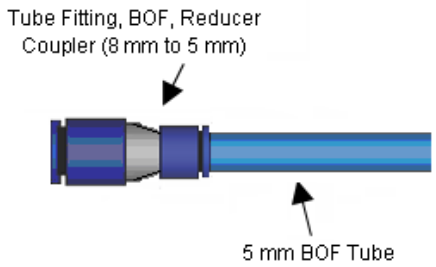

FIGURE 2L1-9. BOF 8-to-5-millimeter reducer coupler with 5-millimeter BOF tube.

Step 18. Carefully feed the blown fibers into the open end of the BOF 8-to-5-millimeter reducer coupler and through the 5-millimeter BOF tubing (see figure 2L1-10).

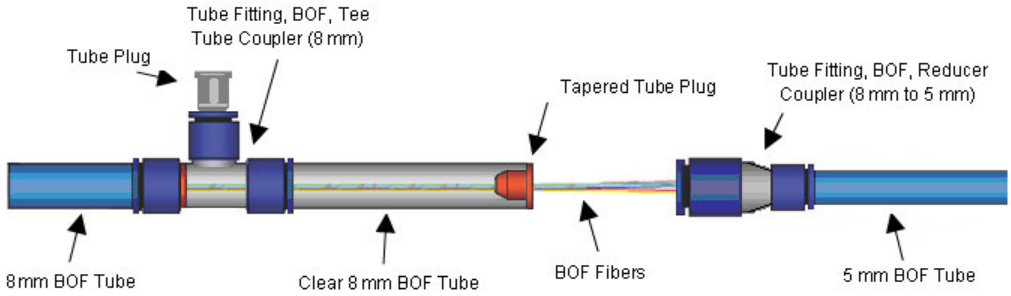

FIGURE 2L1-10. Feeding the blown fibers into the BOF 8-to-5-millimeter reducer coupler (with 5-millimeter BOF tube).

Step 19. Slide the BOF 8-to-5-millimeter reducer coupler onto the clear BOF tube and firmly seat the coupler on the tube (see figure 2L1-11). Apply a light load of approximately 22 Newtons (5 pounds) between the tube and the coupler to ensure the coupler is fully engaged onto the tube.

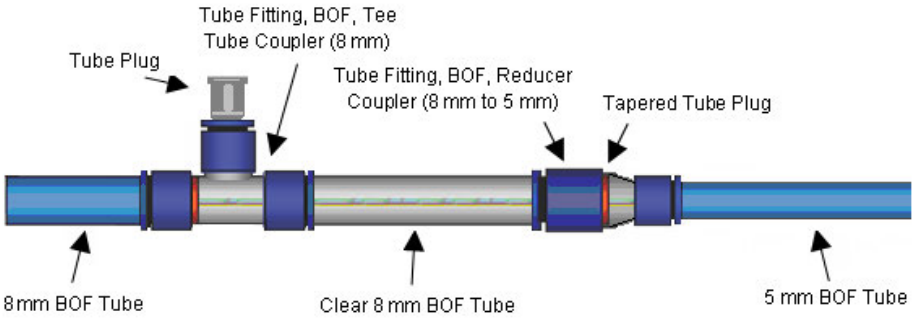

FIGURE 2L1-11. Eight-to-five-millimeter (8-to-5-millimeter) BOF tube transition.

Step 20. Remove the BOF tube fitting plug from the BOF tee tube coupler and set aside.

Step 21. Insert a spare piece of clear BOF tubing into the tee end of the BOF tee tube coupler opening.

Step 22. Cut the tip off the package containing the polyacrylamide crystals (minimum of 0.5 grams [0.018 ounce]) and pour the contents into the spare piece of clear BOF tubing, through the BOF tee tube coupler, and into the clear BOF tubing and around the blown fibers. If necessary, use additional packages of polyacrylamide crystal to ensure the clear BOF tubing is filled to at least the mid-point between the tee tube couple and the reducer coupler.

NOTE: If the polyacrylamide crystals do not free fall, tap on the BOF tee tube coupler with finger, as necessary.

Step 23. Remove the spare piece of clear BOF tubing and replace the BOF tube fitting plug into the tee end of the BOF tee tube coupler (see figure 2L1-12).

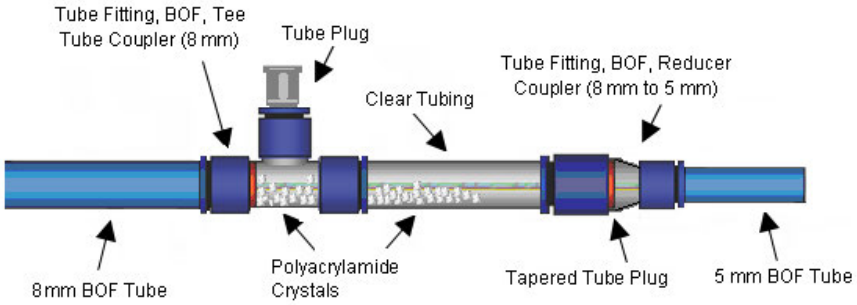

FIGURE 2L1-12. 8-millimeter to 5-millimeter BOF tube transition (with polyacrylamide crystals).

METHOD 2M1
FIVE-MILLIMETER (5-MILLIMETER) BOF TUBE ATTACHMENT TO SPLICE TRAYS

1. SCOPE

1.1 Scope. This method describes the procedure for attaching a 5-millimeter BOF tube to a 7-inch (M24728/8-51) or 10-inch COTS splice tray. This method provides two options for tube attachment. The first is a brass sleeve inserted into the 5-millimeter BOF tube which allows up to three 5-millimeter BOF tubes to be attached to a single side of the splice tray. The second is a 5-millimeter BOF straight tube coupler which allows one 5-millimeter BOF tube to be attached to a single side of the splice tray.

1.2 Blown fiber installation. While it might be possible to blow fiber to a splice tray, it is assumed that the blown fibers will be hand fed through the 5-millimeter tube, based upon the procedures in Method 2L1.

2. DOCUMENTS APPLICABLE TO METHOD 2M1

2.1 General. The documents listed in this section are specified in Method 2M1 of this standard. This section does not include documents cited in other sections of this standard or recommended for additional information or as examples. While every effort has been made to ensure the completeness of this list, document users are cautioned that they must meet all specified requirements of documents cited in Method 2M1 of this standard, whether or not they are listed.

2.2 Government documents.

2.2.1 Specifications, standards, and handbooks. The following specifications, standards, and handbooks form a part of this document to the extent specified herein. Unless otherwise specified, the issues of these documents are those cited in the solicitation or contract.

COMMERCIAL ITEM DESCRIPTIONS

A-A-59731 - Tube Fittings, Blown Optical Fiber

DEPARTMENT OF DEFENSE SPECIFICATIONS

MIL-DTL-24728/8 - Interconnecting Box, Fiber Optic, Fusion Splice Tray and Holder Module

(Copies of these documents are available online at http://quicksearch.dla.mil/.)

2.3 Non-Government publications. The following documents form a part of this document to the extent specified herein. Unless otherwise specified, the issues of these documents are those cited in the solicitation or contract.

SAE INTERNATIONAL

SAE-AS-23190 - Wiring, Positioning, and Support Accessories

(Copies of this document are available online at www.sae.org.)

2.4 Order of precedence. Unless otherwise noted herein or in the contract, in the event of a conflict between the text of this document and the references cited herein, the text of this document takes precedence. Nothing in this document, however, supersedes applicable laws and regulations unless a specific exemption has been obtained.

3. REQUIRED EQUIPMENT AND MATERIALS

3.1 Equipment and materials. The equipment and materials in table 2M1-I shall be used to perform this procedure. More detail on approved sources for items with reference numbers can be found on the Dahlgren shipboard fiber optics website (see 6.6). The list on which items appear is indicated by the two-letter prefix as follows:

a. TL = Recommended Tool List

b. TS = Recommended Test Equipment List

TABLE 2M1-I. Equipment and materials.

Reference #	Description	Quantity
TL-0071	Safety glasses	1
TL-0069	Ruler	1
	Utility knife or scissors	1
	Tube cutter	1
	Tie wraps, 10.16-cm (4-inch) self-cinching straps (SAE-AS-23190)	As required
TL-0081	Bundle jacket stripper (18 gauge for 6-fiber bundles)	As required
TL-0113	Bundle jacket stripper (12 gauge for 18-fiber bundles)	As required
TL-0114	Clear jacket stripper (20 gauge for 6-fiber bundles)	As required
	Scissors	1
	7-inch splice tray (MIL-DTL-24728/8-51)	As required
	10-inch splice tray (Hubbell STRAY24F-MIL, or equal [see 4.6])	As required
	Straight tube coupler (A-A-59731-U-5)	As required
	Brass sleeve (KITCO P/N 0731-1136, or equal [see 4.6])	As required
	Adhesive and sealant tape (Raychem SFTS-1, or equal [see 4.6])	As required
	5-mm tapered tube plug (Connective Solutions P/N TTP-1, or equal [see 4.6])	As required
TL-0134	BOF duct coupling tool	1
TL-0002 or TL-0044	Isopropyl alcohol, 99% pure anhydrous or alcohol pad, sealed	1
TL-0016	Wipes (if not using pre-wetted alcohol pads)	As required
TL-0013	Canned air	As required
	Distilled water	As required
NOTE: Products to be considered for addition to the recommended tool or test equipment shall obtain approval as specified (see 6.5).		

4. PROCEDURES

4.1 Safety summary. The following safety procedures shall be observed:

a. Wear safety glasses at all times when handling bare fibers.

b. Do not touch the ends of bare fiber. Wash hands thoroughly after handling bare fibers.

c. When visually inspecting an optical fiber, do not stare into the end of a fiber connected to a laser source or LED.

d. Observe warnings and cautions on equipment and materials.

4.2 Procedures.

4.2.1 5-millimeter BOF tube and cable preparation. The following steps shall be performed:

NOTE: Keep BOF tube couplers and the ends of BOF tubes clean and free of contaminants.

NOTE: BOF tube couplers may be cleaned using distilled water and blown dry with air. Do not clean or soak BOF tube couplers in alcohol or other cleaning agents. BOF tube couplers can be permanently damaged by exposure to alcohol and cleaning agents.

NOTE: Previously used BOF tube couplers may not adequately seal BOF tubes. When installing BOF cabling, always use new BOF tube couplers.

CAUTION: Disengaging utilized BOF tube couplers may damage or break the optical fibers contained within the BOF tubes.

Step 1. If the 5-millimeter BOF tube that is to be connected to a splice tray has transitioned from an 8-millimeter BOF tube, ensure that the transition is in accordance with Method 2L1.

NOTE: If the blowing of the individual fibers or BOF bundle occurs after the 5-millimeter BOF tube is attached to the splice tray, then the tube transition, Method 2L1, cannot be completed until this method is complete.

Step 2. Ensure that the routing, forming, and shaping procedures for the 5-millimeter BOF tubing are performed in accordance with the methods applicable for the specific enclosure.

NOTE: When routing the 5-millimeter BOF tube to the splice tray, the tube should be routed to “Side B” of the splice tray (see figure 2M1-1), which is typically towards the top-side of the tray holder. In the event that the splice tray is not oriented with “Side B” of the splice tray up, it may be necessary to run the 5-millimeter BOF tube to “Side A” of the splice tray.

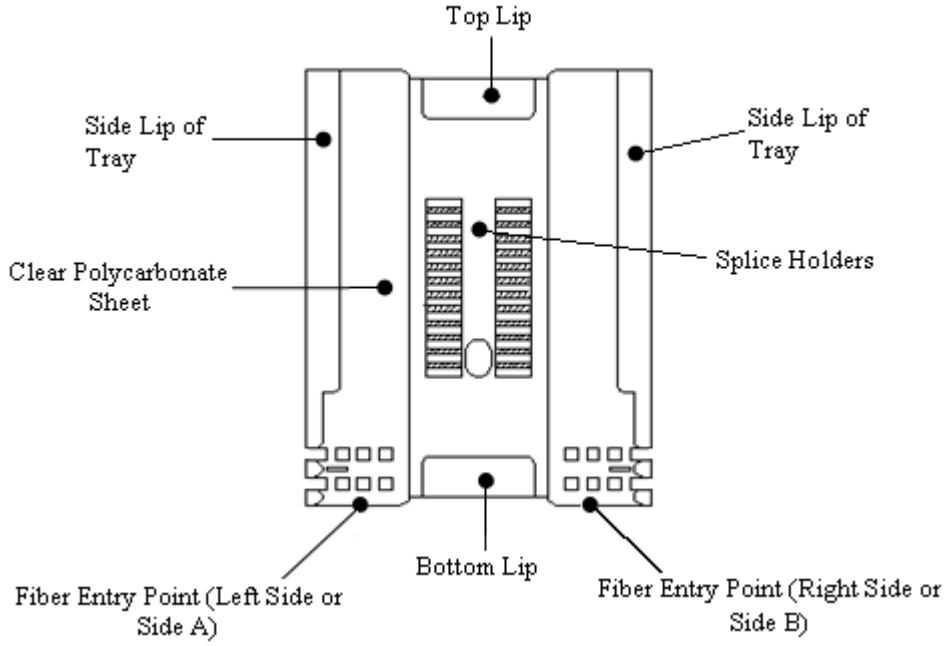

FIGURE 2M1-1. Fusion splice tray layout (7-inch tray shown as example).

Step 3. Ensure that the 5-millimeter BOF tube contains the heat shrink tubing with the tube identification. It is recommended that this tube identification appears approximately 10 centimeters (4 inches) away from both ends of the 5-millimeter BOF tube.

CAUTION: Do not heat tube identification labels on 5-millimeter BOF tubes.

Step 4. Visually verify that the end of the 5-millimeter BOF tube is cut perpendicular to the tube length. If not perpendicular and the tube does not contain fiber, cut the tube perpendicular to the tube length using the tube cutter. If not perpendicular and the tube contains fiber, the 5-millimeter BOF tube should be disengaged from the coupler and slid down the fiber to allow cutting the tube with the tube cutter and then sliding the tube back. An alternative approach for cutting the tube, though not preferred, is to ring cut the tube, exercising great care not to damage the fibers inside. Clean the end of the BOF tube with a wipe dampened with alcohol and blow dry as necessary.

Step 5. If the 5-millimeter BOF tube is to be attached to the splice tray without individual blown fibers or fibers from a BOF bundle, or if the individual blown fibers or fibers from a BOF bundle have already been blown and fed through the 5-millimeter BOF tube (as specified in Method 2L1), skip to step 8.

NOTE: If the 5-millimeter BOF tube is attached to the splice tray without blown fibers, it may be necessary to remove the 5-millimeter BOF tube from the splice tray at the time that blown fibers are brought to the splice tray.

Step 6. Perform the blowing of the individual blown fiber or BOF bundle following the specific manufacturer's blowing procedure, complete the tube transition, and feed the fibers through the 5-millimeter BOF tube.

NOTE: When blowing individual fibers or BOF bundles, ensure that enough fiber is blown to account for the length of the 5-millimeter BOF tube, the fiber length required for the various couplers and clear BOF tubing, the fiber length required for splicing, any additional length required for fiber identification, and slack margin.

NOTE: Ensure at least 84 centimeters (33 inches) of fiber extend beyond the end of the 5-millimeter tube for connections to 10-inch splice trays. Ensure at least 63.5 centimeters (25 inches) of fiber extend beyond the end of the 5-millimeter tube for connections to 7-inch splice trays.

NOTE: If the transition process specified in Method 2L1 is not completed prior to proceeding with this method, it may be difficult to complete without damaging the blown fibers.

Step 7. For BOF bundles only:

a. For installation using the straight tube coupler, mark the BOF bundle jacket approximately 25 millimeters (1 inch) from the end of the tube coupler.

b. For installation using the brass sleeve, mark the BOF bundle jacket approximately 25 millimeters (1 inch) shorter than the length needed to exit the 5-millimeter tube.

c. Using the bundle jacket stripper, remove the exposed bundle jacket in approximately 160-millimeter (6-inch) lengths back to the marks.

NOTE: Once a short length of the bundle jacket has been removed, the remaining length can be torn off of the bundle by hand.

d. Using the clear jacket stripper, remove approximately 80 millimeters (3.0 inches) of the clear inner jacket from the end of each six-fiber subunit.

NOTE: If the wire stripper does not bite into the clear inner jacket, position the wire stripper at a 30- to 40-degree angle to increase its bite.

e. Find the ripcord from among the six fibers. Ensure that it is not crossed with any of the fibers. While holding the group of fibers in one hand, pull the ripcord along the bundle with the other hand. Pull the ripcord until it reaches the mark on the bundle jacket.

NOTE: The ripcord and fibers spiral along the bundle length. Take care to follow the spiral when pulling the ripcord.

f. Starting at the end of the fiber bundle subunit, carefully pull the group of fibers from the clear inner jacket.

g. Using the scissors, carefully cut away the ripcord and the clear inner jacket.

Step 8. For tray attachment using the brass sleeve method, proceed to 4.2.2 of this method. For tray attachment using the 5-millimeter BOF straight tube coupler, skip to 4.2.3 of this method.

NOTE: The 10-inch COTS tray attachment must be accomplished utilizing the brass sleeve method.

4.2.2 Brass sleeve attachment. The following steps shall be performed:

Step 1. If the 5-millimeter BOF tube is to be attached to the splice tray without individual blown fibers or fibers from a BOF bundle, skip to step 3.

Step 2. Feed the blown fibers into the non-flange side of the brass sleeve and slide the brass sleeve down the blown fibers towards the open end of the 5-millimeter BOF tube (see figure 2M1-2).

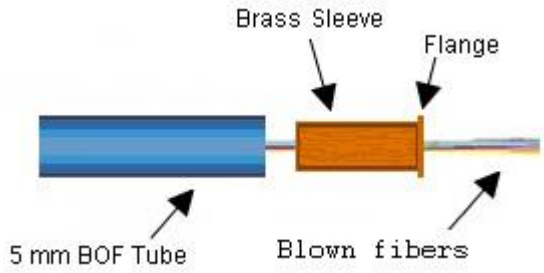

FIGURE 2M1-2. Inserting blown fibers through brass sleeve.

Step 3. Insert the brass sleeve into the 5-millimeter BOF tube. The BOF duct coupling tool can be used to help insert the brass sleeve by aligning the inset side of the 5-millimeter end of the tool over the sleeve flange. Applying equal pressure on the top side flange, press the sleeve into the tubing until the flange is flush with the BOF tube (see figure 2M1-3 for the 5-millimeter BOF tube with brass sleeve with blown fibers and figure 2M1-4 for 5-millimeter BOF tube with brass sleeve without blown fibers).

CAUTION: Use extreme care when performing the process of inserting the brass sleeve into the BOF tubing with blown fibers, as fibers can be damaged

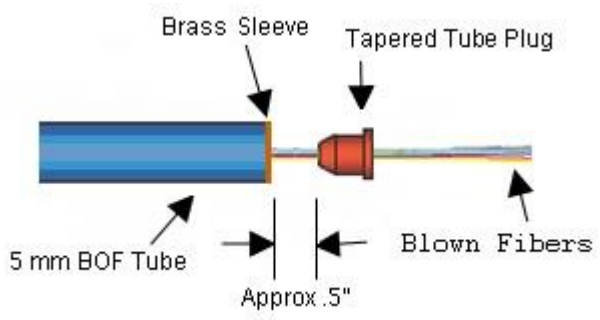

FIGURE 2M1-3. 5-millimeter BOF tube and brass sleeve with blown fibers.

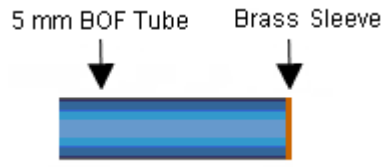

FIGURE 2M1-4. 5-millimeter BOF tube and brass sleeve without blown fibers.

Step 4. If blown fibers are not present in the 5-millimeter BOF tube, skip to step 6. Otherwise, place the appropriate sized tapered tube plug around the fibers approximately 12 millimeters (0.5 inch) from the open end of the brass sleeve (see figure 2M1-3). Carefully slide the tapered tube plug along the blown fibers and into the brass sleeve until the plug is fully inserted into the sleeve.

NOTE: The tapered tube plug should be oriented with the tapered end of the plug towards the 5-millimeter BOF tube and brass sleeve.

NOTE: Do not pull slack blown fibers out of the 5-millimeter BOF tube while assembling the plug to blown fibers and the BOF tube. If slack fibers are accidentally pulled out of the BOF tube, re-establish the fibers to their original position and continue the procedure.

Step 5. The flange on the tapered tube plug should be even with the outer diameter of the 5-millimeter BOF tube and the flange on the brass sleeve. If necessary, trim the flange to the outer diameter of the tube and brass sleeve flange using scissors or another appropriate cutting tool.

Step 6. Attaching the 5-millimeter BOF tube to the right-most position on Side B of the splice tray. This is the desired location for the attaching a single 5-millimeter BOF tube to a splice tray.

NOTE: Figure 2M1-5 identifies the mounting positions and retention slots for the Side B entry point of the splice tray.

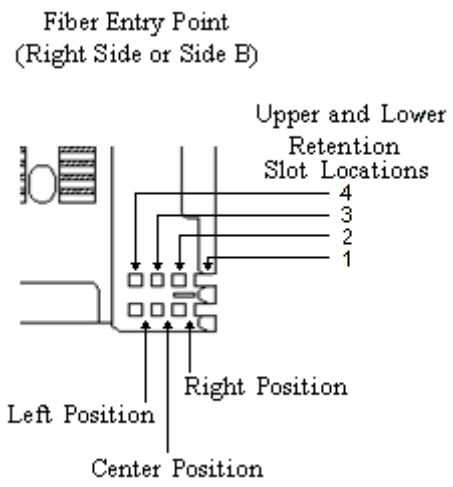

FIGURE 2M1-5. Mounting positions and retention slot identification.

a. Place the 5-millimeter BOF tube down on the splice tray in the right-most position on Side B. Ensure that the flange end of the brass sleeve is located above the upper retention slots (see figure 2M1-6A).

b. With the first tie wrap facing up and the tie wrap buckle to the right, insert the tip of the tie wrap into the upper second retention slot (see figure 2M1-6B).

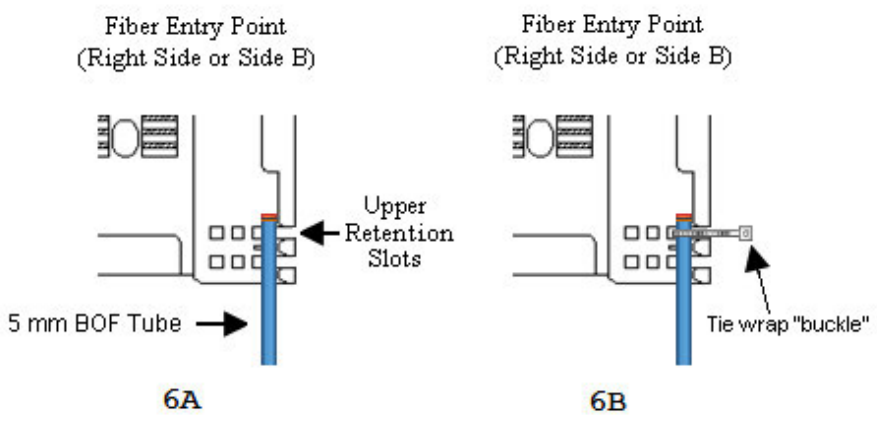

FIGURE 2M1-6. BOF tube attachment, BOF tube location on splice tray (6A) and first tie wrap (6B).

c. Wrap the top portion of the tie wrap across the 5-millimeter BOF tube, through the upper first retention slot, and around to the back of the tray.

d. Insert the tip of the tie wrap into the tie wrap buckle and cinch the tie wrap down around the 5-millimeter BOF tube and the splice tray until snug. Cut off the excess tie wrap.

e. With a second tie wrap facing up and the tie wrap buckle to the right, insert the tip of the tie wrap into the lower second retention slot (see figure 2M1-7A).

f. Wrap the top portion of the tie wrap across the 5-millimeter BOF tube, through the lower first retention slot, and around to the back of the tray.

g. Insert the tip of the tie wrap into the tie wrap buckle and cinch the tie wrap down around the 5-millimeter BOF tube and the splice tray until snug. Cut off the excess tie wrap (see figure 2M1-7B).

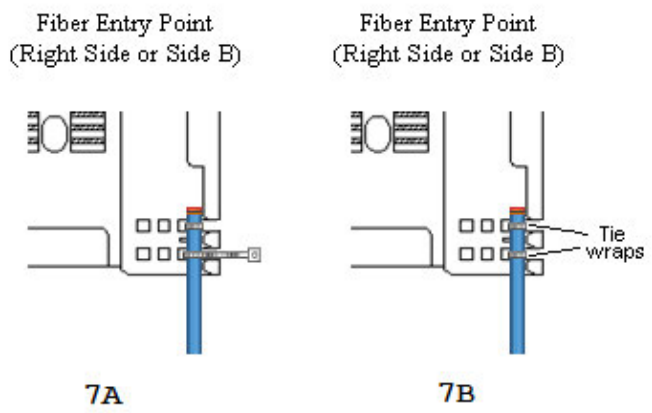

FIGURE 2M1-7. BOF tube attachment, second tie wrap (7A), and attached BOF tube (7B).

h. If a second 5-millimeter BOF tube is to be attached to the splice tray, proceed to step 7. Otherwise, this method is complete.

Step 7. Attach the 5-millimeter BOF tube to the center position on Side B of the splice tray (see figure 2M1-5). This is the desired location for the attaching a second 5-millimeter BOF tube to a splice tray.

a. Place the 5-millimeter BOF tube down on the splice tray in the center position on Side B. Ensure that the flange end of the brass sleeve is located above the upper retention slots.

b. With the first tie wrap facing up and the tie wrap buckle to the right, insert the tip of the tie wrap up from the bottom of the splice tray through the upper second retention slot.

c. Wrap the tie wrap across the second 5-millimeter BOF tube, and insert the tip of the tie wrap down through the third upper retention slot.

d. Insert the tip of the tie wrap into the tie wrap buckle and cinch the tie wrap down around the 5-millimeter BOF tube and the splice tray until snug. Cut off the excess tie wrap.

e. With a second tie wrap facing up and the tie wrap buckle to the right, insert the tip of the tie wrap up from the bottom of the splice tray through the lower second retention slot.

f. Wrap the tie wrap across the second 5-millimeter BOF tube, and insert the tip of the tie wrap down through the third lower retention slot.

g. Insert the tip of the tie wrap into the tie wrap buckle and cinch the tie wrap down around the 5-millimeter BOF tube and the splice tray until snug. Cut off the excess tie wrap (see figure 2M1-8).

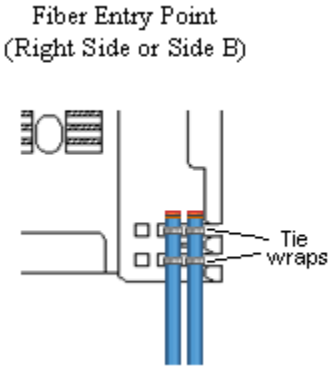

FIGURE 2M1-8. Splice tray with two 5-millimeter BOF tubes.

h. If a third 5-millimeter BOF tube is to be attached to the splice tray, proceed to step 8. Otherwise, this method is complete.

Step 8. Attach the 5-millimeter BOF tube to the left most position on Side B of the splice tray (see figure 2M1-5). This is the location for attaching a third 5-millimeter BOF tube to a splice tray.

a. Place the 5-millimeter BOF tube down on the splice tray in the left most position on Side B. Ensure that the flange end of the brass sleeve is located above the upper retention slots.

b. With the first tie wrap facing up and the tie wrap buckle to the right, insert the tip of the tie wrap up from the bottom of the splice tray through the upper third retention slot.

c. Wrap the tie wrap across the third 5-millimeter BOF tube, and insert the tip of the tie wrap down through the fourth upper retention slot.

d. Insert the tip of the tie wrap into the tie wrap buckle and cinch the tie wrap down around the 5-millimeter BOF tube and the splice tray until snug. Cut off the excess tie wrap.

e. With a second tie wrap facing up and the tie wrap buckle to the right, insert the tip of the tie wrap up from the bottom of the splice tray through the lower third retention slot.

f. Wrap the tie wrap across the third 5-millimeter BOF tube, and insert the tip of the tie wrap down through the fourth lower retention slot.

g. Insert the tip of the tie wrap into the tie wrap buckle and cinch the tie wrap down around the 5-millimeter BOF tube and the splice tray until snug. Cut off the excess tie wrap (see figure 2M1-9).

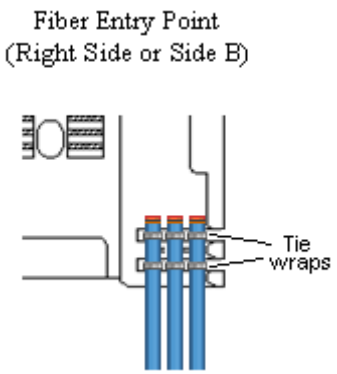

FIGURE 2M1-9. Splice tray with three 5-millimeter BOF tubes.

4.2.3 5-millimeter BOF straight tube coupler attachment. The following steps shall be performed:

NOTE: A maximum of one BOF straight tube coupler attachment can be performed on each side of the splice tray.

Step 1. If the 5-millimeter BOF tube is to be attached to the splice tray without individual blown fibers or fibers from a BOF bundle, skip to step 8.

Step 2. For installations of blown fiber bundles, skip to step 6.

Step 3. For installations of individual blown fibers, work a small amount of sealant tape around the optical fibers approximately 12 millimeters (0.5 inch) from the end of the BOF tube.

Step 4. Place the tapered tube plug around the optical fibers and sealant tape.

Step 5. Push the tapered tube plug toward the BOF tube until the tapered tube plug is fully seated into the BOF tube. (see figure 2M1-10). Skip to step 8.

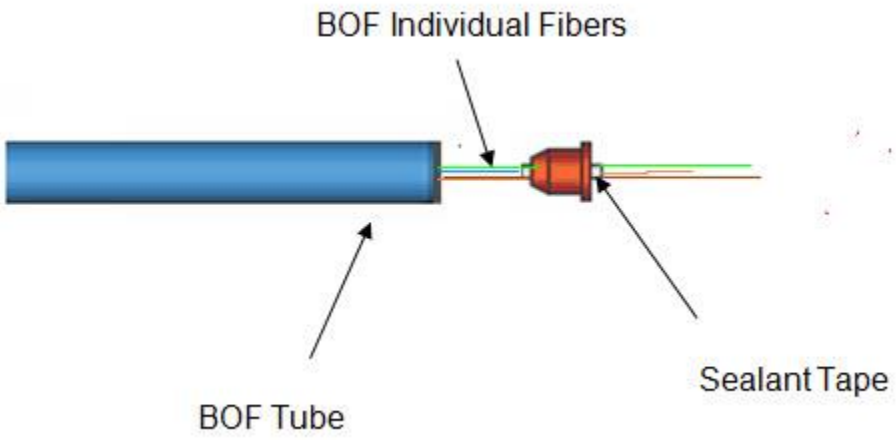

FIGURE 2M1-10. Tapered tube plug installation for individual fibers.

Step 6. For BOF bundles, place the provided tapered tube plug around the exposed bundle jacket approximately 12 millimeters (0.5 inch) from the end of the BOF tube (see figure 2M1-11).

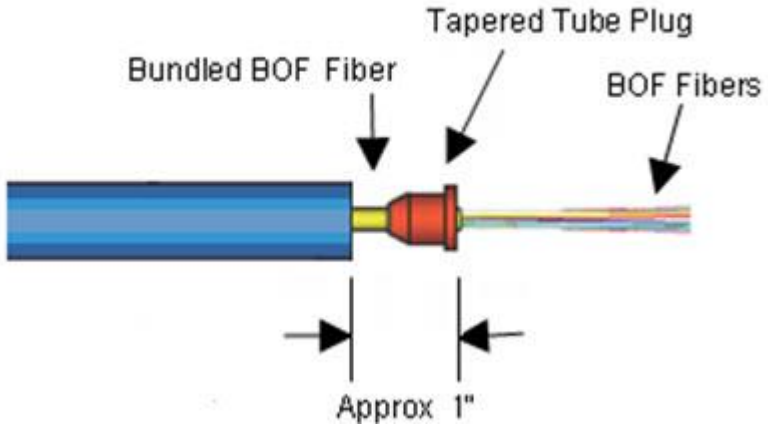

FIGURE 2M1-11. Tapered tube plug installation for BOF bundle.

Step 7. Push the tapered plug until the plug is fully inserted into the tube.

NOTE: Do not pull slack fiber bundle out of the BOF tube while assembling the plug to the bundle jacket. If slack fiber bundle is accidentally pulled out of the BOF tube, re-establish the bundle to its original position and continue the procedure.

Step 8. Clean the end of the BOF tube with a wipe dampened with alcohol and blow dry as necessary.

Step 9. With the BOF tube and fibers assembled into the tapered tube plug, slide a 5-millimeter BOF straight tube coupler over the fibers and onto the tube (see figure 2M1-12). Apply an axial load between the BOF tube and BOF coupler to verify that the coupler is properly engaged.

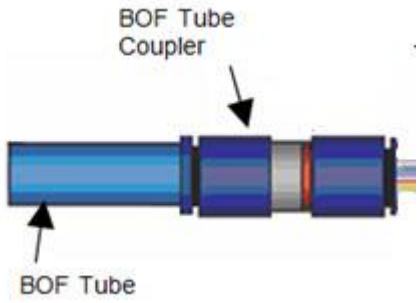

FIGURE 2M1-12. Installation of 5 millimeter BOF straight tube coupler to BOF tube.

Step 10. Place the BOF straight tube coupler down on the tray. Ensure the BOF straight tube coupler is placed between the retention slots (see figure 2M1-13).

Step 11. Insert a self-cinching strap into the first set of retention slots closest to the entry point. Cinch down self-cinching strap around BOF tube coupler until snug and cut off the excess self-cinching strap (see figure 2M1-13).

Step 12. Insert a second self-cinching strap into the first set of retention slots furthest from the entry point. Cinch down self-cinching strap around BOF until snug and cut off the excess self-cinching strap (see figure 2M1-13).

NOTE: The buckles of the tie wraps should be on the coupler side of the tray towards the outer part of the tray.

NOTE: Both tie wraps should sit in the neck (middle) section of the BOF tube coupler.

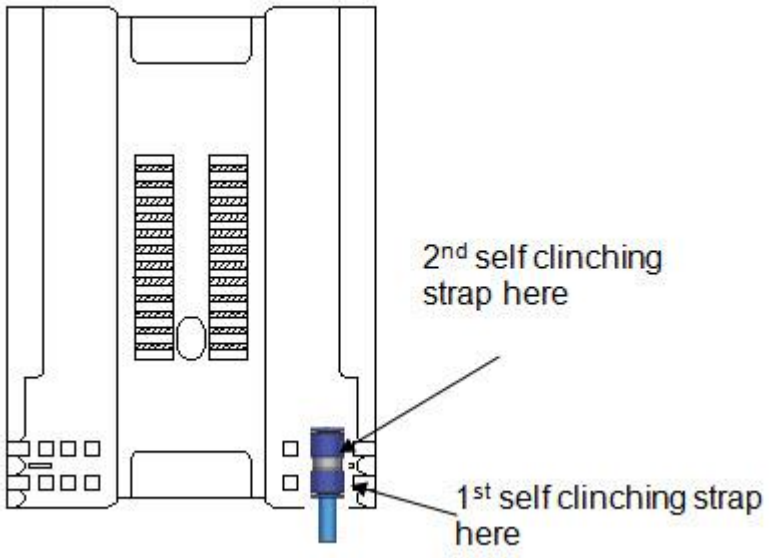

FIGURE 2M1-13. Installation of 5-millimeter BOF straight tube coupler to tray.

Step 13. If necessary, repeat steps 1 through 13 to attach a 5-millimeter BOF tube to the other side of the tray.

Preparing activity:
Navy – SH
(Project SESS-2014-006)

NOTE: The activities listed above were interested in this document as of the date of this document. Since organizations and responsibilities can change, you should verify the currency of the information above using the ASSIST Online database at https://assist.dla.mil.