Downloaded from http://www.everyspec.com

NOT MEASUREMENT SENSITIVE

MIL-STD-1949A
15 MAY 1989
SUPERSEDING
MIL-STD-1949
1 AUGUST 1985

MILITARY STANDARD

INSPECTION, MAGNETIC PARTICLE

NO DELIVERABLE DATA REQUIRED BY THIS DOCUMENT

AMSC N/A

AREA NDTI

DISTRIBUTION STATEMENT A Approved for public release; distribution unlimited.

Downloaded from http://www.everyspec.com

DEPARTMENT OF DEFENSE
Washington, D.C. 20325

Inspection, Magnetic Particle

1. This Military Standard is approved for use by all Departments and Agencies of the Department of Defense.

2. Beneficial comments (recommendations, additions, deletions) and any pertinent data which may be of use in improving this document should be addressed to: Director, U.S. Army Materials Technology Laboratory, ATTN: SLCMT-MEE, Watertown, MA 02172-0001 by using the Standardization Document Improvement Proposal (DD Form 1426) appearing at the end of this document or by letter.

Downloaded from http://www.everyspec.com

FOREWORD

This standard is a procedural document describing wet and dry techniques for magnetic particle inspection. This document supersedes MIL-STD-1949, MIL-M-11472 and MIL-I-6868E.

Downloaded from http://www.everyspec.com

CONTENTS

PARAGRAPH		PAGE
	SCOPE	1
1.1	Scope	1
2.	REFERENCE DOCUMENTS	2
2.1	Government documents	2
2.1.1	Specifications, standards and handbooks	2
2.1.2	Other government documents, drawings, and publications	2
2.2	Non-Government publications	3
2.2.1	ASTM	3
2.2.2	Society of Automotive Engineers: Aerospace Materials Specifications	3
2.3	Order of precedence	3
3.	DEFINITIONS	4
3.1	Ambient light	4
3.2	Alternating current	4
3.3	Black light	4
3.4	Classification	4
3.5	Coil shot	4
3.6	Conditioned water	4
3.7	Continuous method	4
3.8	Contracting agency	4
3.9	Defect	4
3.10	Flux leakage	4
3.11	Full wave rectified alternating current	4
3.12	Gauss	4
3.13	Half wave rectified alternating current	4
3.14	Head shot	4
3.15	Indication	4
3.16	Indication, false	5
3.17	Indication, relevant	5
3.18	Indication, nonrelevant	5
3.19	Magnetic flux	5
3.20	Magnetization	5
3.21	Multidirectional field	5
3.22	Permeability	5
3.23	Prods	5
3.24	Residual method	5
3.25	Suspension	5
3.26	Tangential applied field strength	5
3.27	Water break test	5
3.28	Wet method	5
3.29	Yoke	5
3.30	Other definitions	5
4.	GENERAL REQUIREMENTS	6
4.1	Principles of magnetic particle inspection	6
4.1.1	Intended use of magnetic particle inspection	6

Downloaded from http://www.everyspec.com

CONTENTS

PARAGRAPH		PAGE
4.1.2	Basic principle	6
4.1.3	Magnetization and particle application	6
4.2	Qualification of inspection personnel	6
4.3	Acceptance requirements	6
4.4	Written procedure	6
4.4.1	Elements of the written procedure	7
4.5	Record of inspection	7
4.6	Magnetizing and demagnetizing equipment	7
4.7	Inspection sequence	8
4.8	Lighting intensities	8
4.8.1	Visible light intensities	8
4.8.2	Black light intensities	8
4.9	Materials	8
4.9.1	Magnetic particle materials	8
4.9.1.1	Dry particle requirements	8
4.9.1.2	Wet particle requirements	9
4.9.2	Suspension vehicles	9
4.9.3	Particle concentration	9
4.9.4	Conditioned water vehicle	9
5.	DETAIL REQUIREMENTS	10
5.1	Preparation of parts for inspection	10
5.1.1	Pre-inspection demagnetization	10
5.1.2	Surface cleanliness and finish	10
5.1.3	Coatings	10
5.1.4	Plugging and masking	10
5.2	Magnetization methods	10
5.2.1	Permanent magnets	10
5.2.2	Yokes	10
5.2.3	Types of magnetizing current	10
5.2.4	Magnetic field directions	11
5.2.5	Multidirectional magnetization	11
5.2.6	Direct magnetization	11
5.2.7	Indirect magnetization	11
5.2.8	Induced current magnetization	11
5.3	Magnetic field strength	11
5.3.1	Magnetization current levels	12
5.3.1.1	Prod current levels	12
5.3.1.2	Direct circular magnetization	12
5.3.1.3	Central conductor circular magnetization	12
5.3.1.3.1	Centrally located conductor	12
5.3.1.3.2	Offset central conductor	12
5.3.1.4	Longitudinal magnetization using coils	13
5.3.1.4.1	Longitudinal magnetization with low fill factor coils	13
5.3.1.4.2	Longitudinal magnetization with cable wrap or high fill factor coils	14
5.3.1.4.3	Longitudinal magnetization for intermediate fill factor coils	14

Downloaded from http://www.everyspec.com

CONTENTS

PARAGRAPH		PAGE
5.3.1.4.4	Calculating the L/D ratio for a hollow or cylindrical part.	14
5.4	Particle application	15
5.4.1	Continuous method	15
5.4.2	Residual magnetization method	15
5.4.3	Prolonged magnetization	15
5.4.4	Dry magnetic particle application	15
5.4.5	Wet magnetic particle application	16
5.4.6	Magnetic slurry/paint application	16
5.4.7	Magnetic polymer application	16
5.5	Recording of indications	16
5.5.1	Written description	16
5.5.2	Transparent tape	16
5.5.3	Strippable film	16
5.5.4	Photography	17
5.6	Post-inspection demagnetization and cleaning.	17
5.6.1	Demagnetization	17
5.6.2	Post-inspection cleaning.	17
5.7	Quality control	17
5.7.1	System performance verification	17
5.7.2	Use of test part with discontinuities	17
5.7.3	Fabricated test parts with artificial discontinuities	18
5.7.4	Suspension vehicle tests	18
5.7.4.1	Concentration tests	18
5.7.4.1.1	Determination of wet particle concentration	18
5.7.4.1.2	Determination of wet particle contamination	18
5.7.4.2	Water break test	18
5.7.5	Equipment calibration	19
5.7.5.1	Ammeter accuracy	19
5.7.5.2	Timer control check	19
5.7.5.3	Magnetic field quick break check.	19
5.7.5.4	Dead weight check	19
5.8	Marking of inspected parts	19
5.8.1	Impression stamping, laser marking or vibro engraving	19
5.8.2	Etching	20
5.8.3	Dyeing	20
5.8.4	Other identification.	20
5.8.5	Identifying symbols and color markings	20
5.8.5.1	100-percent inspection	20
5.8.5.1.1	Dyeing	20
5.8.5.1.2	Stamping, laser marking vibro engraving or etching	20
5.8.5.2	Lot inspection	20
5.8.5.2.1	Dyeing	20
5.8.5.2.2	Stamping, vibro engraving or etching	20
5.9	Eye glasses	20
5.10	Aircraft quality steel cleanliness.	20

Downloaded from http://www.everyspec.com

CONTENTS

PARAGRAPH		PAGE
5.11	Acceptance requirements	20
5.12	Safety	21
5.12.1	Flammability	21
5.12.2	Personnel hazards	21
5.12.3	Electrical hazards	21
5.12.4	Black light	21
5.13	Dark adaptation	21
6.	NOTES	22
6.1	Measurement of tangential field strength	22
6.2	Subject term (key word) listing	22

FIGURE

1	23
2	23
3	24
4	24
5	25
6	25
7	26

TABLE

I	27
II	27

Downloaded from http://www.everyspec.com

1. SCOPE

1.1 Scope. This standard establishes minimum requirements for magnetic particle inspection used for detection of surface or slightly subsurface discontinuities in ferromagnetic materials.

Downloaded from http://www.everyspec.com

2. REFERENCE DOCUMENTS

2.1 Government documents.

2.1.1 Specifications, standards, and handbooks. The following specifications, standards, and handbooks form a part of this document to the extent specified herein. Unless otherwise specified, the issues of these documents are those listed in the issue of the Department of Defense Index of Specifications and Standards (DODISS) and supplement thereto, cited in the solicitation.

SPECIFICATIONS

MILITARY

MIL-I-83387 - Inspection Process, Magnetic Rubber
DOD-F-87935 - Fluid , Magnetic Particle Inspection, Suspension (Metric)

STANDARDS

FEDERAL

FED-STD-313 - Material Safety Data Sheets Preparation and the Submission of
FED-STD-595 - Colors

MILITARY

MIL-STD-350 - Inspection, Liquid Penetrant and Magnetic Particle Soundness Requirements For Materials, Parts and Weldments

MIL-STD-410 - Nondestructive Testing Personnel Qualification and Certification
MIL-STD-2175 - Castings, Classification and Inspection of
MIL-STD-45662 - Calibration Systems Requirements

(Unless otherwise indicated, copies of federal and military specifications, standards, and handbooks are available from the Naval Publications and Forms Center, (ATTN: NPODS), 5801 Tabor Avenue, Philadelphia, PA 19120-5099.)

2.1.2 Other Government documents, drawings, and publications. The following other Government documents, drawings, and publications form a part of this document to the extent specified herein. Unless otherwise specified, the issues are those cited in the solicitation.

29CFR 1910.1200 - Hazard Communication (OSHA)

Code of Federal Regulations is available from the Superintendent of Documents, U.S. Government Printing Office, Washington, DC 20402

Downloaded from http://www.everyspec.com

2.2 Non-Government publications. The following documents form a part of this specification to the extent specified herein. Unless otherwise specified, the issues of the documents which are DoD adopted are those listed in the issue of the DODISS cited in the solicitation. Unless otherwise specified, the issues of documents not listed in the DODISS are the issues of the documents cited in the solicitation (see 6.2).

2.2.1 ASTM (AMERICAN SOCIETY FOR TESTING ANS MATERIALS)

ASTM A275 - Magnetic Particle Examination of Steel Forgings
ASTM A456 - Specification for Magnetic Particle Examination of Large Crankshaft Forgings
ASTM D96 - Water and Sediment in Crude Oils
ASTM E125 - Reference Photographs for Magnetic Particle Indications on Ferrous Castings.
ASTM E269 - Standard Definitions of Terms Relating to Magnetic Particle Examination

(Applications for copies should be addressed to ASTM, 1916 Race Street, Philadelphia, Pennsylvania 19103.)

2.2.2 SOCIETY OF AUTOMOTIVE ENGINEERS: AEROSPACE MATERIALS SPECIFICATIONS

AMS 2300 - Premium Aircraft-Quality Steel Cleanliness Magnetic Particle Inspection Procedure
AMS 2301 - Aircraft Quality Steel Cleanliness Magnetic Particle Inspection Procedure
AMS 2303 - Aircraft Quality Steel Cleanliness Martensitic Corrosion Resistant Steels Magnetic Particle Inspection Procedure
AMS 2641 - Vehicle, Magnetic Particle Inspection
AMS 3040 - Magnetic Particles, Nonfluorescent, Dry Method
AMS 3041 - Magnetic Particles, Nonfluorescent, Wet Method, Oil Vehicle, Ready-To-Use
AMS 3042 - Magnetic Particles, Nonfluorescent, Wet Method, Dry Powder
AMS 3043 - Magnetic Particles, Nonfluorescent, Wet Method, Oil Vehicle, Aerosol Packaged
AMS 3044 - Magnetic Particles, Fluorescent, Wet Method, Dry Powder
AMS 3045 - Magnetic Particles, Fluorescent, Wet Method, Oil Vehicle, Ready-To-Use
AMS 3046 - Magnetic Particles, Fluorescent, Wet Method, Oil Vehicle, Aerosol Packaged

(Copies of publications may be obtained from the Society of Automotive Engineers, Inc., 400 Commonwealth Drive, Warrendale, Pennsylvania 15096.)

2.3 Order of precedence. In the event of a conflict between the text of this document and the references cited herein, the text of this document takes precedence. Nothing in this document, however, supersedes applicable laws and regulations unless a specific exemption has been obtained.

Downloaded from http://www.everyspec.com

3. DEFINITIONS

3.1 Ambient light. The visible light level measured at the specimen surface with the black light on.

3.2 Alternating current. An electrical current that reverses its direction of flow at regular intervals.

3.3 Black light. Electromagnetic radiation in the near ultraviolet range of wavelengths 320 to 380 nanometers (1 nm = 10^{-9} meters) with those wavelengths near 365 nm predominating.

3.4 Classification. The initial review of a visible magnetic particle accumulation to decide if it is held on the test piece by magnetic means or by non-magnetic means (i.e. if it is a relevant, non-relevant or false indication).

3.5 Coil shot. Production of longitudinal magnetization accomplished by passing current through a coil encircling the part being inspected.

3.6 Conditioned water. Water with an additive or additives which impart specific properties such as proper wetting, particle dispersion, or corrosion resistance.

3.7 Continuous method. The continuous method of examination consists of applying or otherwise making available on the surface of the piece, an ample amount of magnetic particles to form satisfactory indications while the magnetizing force is being applied.

3.8 Contracting agency. A prime contractor, subcontractor or government agency procuring magnetic particle inspection services.

3.9 Defect. An unintended discontinuity with size, shape, orientation or location which makes it detrimental to the useful service of the part.

3.10 Flux leakage. A local distortion of the normal magnetic flux pattern of a magnetized part caused by a discontinuity in the part.

3.11 Full wave rectified alternating current. A full wave rectified single or three-phase alternating current.

3.12 Gauss. This is the unit of flux density or induction in the centimeter, gram, seconds electromagnetic unit system. (1 gauss = 10^{-4} tesla) (In air 1 gauss is equivalent to 1 oersted which equals 79.58 amps per meter).

3.13 Half wave rectified alternating current. A rectified single phase alternating current that produces a pulsating unidirectional field.

3.14 Head Shot. Producing circular magnetization by passing current directly through the part being inspected while being held in contact with the head stocks in a horizontal wet machine.

3.15 Indication. An accumulation of magnetic particles on the test piece that forms during the inspection process.

Downloaded from http://www.everyspec.com

3.16 Indication, false. An indication which is not the result of magnetic forces.

3.17 Indication, relevant. An indication that is caused by a condition or discontinuity that is potentially rejectable when evaluated with respect to specified acceptance/rejection criteria.

3.18 Indication, nonrelevant. An indication caused by flux leakage that has no relation to a discontinuity that is considered to be a defect. (For example, magnetic writing or a change in section due to part design).

3.19 Magnetic flux. A conceptualization of the magnetic field intensity based on the line pattern produced when iron filings are sprinkled on paper laid over a permanent magnet. The magnetic field lies in the direction of the flux lines and has an intensity proportional to the line density.

3.20 Magnetization. The process by which the elementary magnetic domains of a material are aligned predominantly in one direction.

3.21 Multidirectional field. Two or more separate magnetic fields imposed sequentially upon a part in different directions and in rapid succession.

3.22 Permeability. The ratio of flux density produced to magnetizing force. (High permeability materials are easier to magnetize than low permeability materials.)

3.23 Prods. Hand held electrodes through which a magnetizing current is applied resulting in a distorted circular field.

3.24 Residual method. The application of magnetic particles after the magnetizing force has been discontinued.

3.25 Suspension. A two-phase system consisting of finely divided magnetic particles dispersed in a liquid vehicle.

3.26 Tangential applied field strength. The component of the magnetic field parallel to the surface of the part measured at the surface where the inspection is taking place while the magnetizing force is applied.

3.27 Water break test. A quality control test for conditioned water to determine that the surface tension of the water has been reduced sufficiently by a wetting agent to satisfactorily cover the surface of the items to be inspected.

3.28 Wet method. The inspection technique in which the magnetic particles employed are suspended in a liquid vehicle.

3.29 Yoke. A "U" shaped magnet that induces a magnetic field in the area of a part that lies between its poles. Yokes may be permanent magnets or either alternating-current or direct-current electromagnets.

3.30 Other definitions. Definitions not given herein shall be as specified in ASTM E269.

Downloaded from http://www.everyspec.com

4. GENERAL REQUIREMENTS

4.1 Principles of magnetic particle inspection.

4.1.1 Intended use of magnetic particle inspection. The magnetic particle inspection method is used to detect cracks, laps, seams, inclusions, and other surface or slightly subsurface discontinuities in ferromagnetic materials. Magnetic particle inspection may be applied to raw material, billets, finished and semifinished materials, welds, and in-service parts. Magnetic particle inspection is not applicable to nonferromagnetic metals and alloys such as austenitic stainless steels.

4.1.2 Basic principle. The method is based on the principle that the magnetic flux near the surface of a magnetized material is distorted locally by the presence of discontinuities. This distortion of the field pattern, termed "flux leakage", is capable of attracting and holding an inspection medium of finely divided magnetic particles. The resulting accumulation of particles will be visible under the proper lighting conditions. Sensitivity is greatest for discontinuities at the surface.

4.1.3 Magnetization and particle application. Magnetic particle inspection consists of magnetization of the area to be inspected, application of suitably prepared magnetic particles while the area is magnetized or being magnetized, and subsequent classification, interpretation, and evaluation of any resulting particle accumulations. Maximum detectability occurs when the discontinuity has a depth at least five times its opening, a length at least equal to its depth, and is positioned perpendicular to the magnetic flux. In order to detect discontinuties in all directions at least two magnetic fields, perpendicular to one another in a plane parallel to the surface being inspected shall be used, except when specifically exempted by the contracting agency.

4.2 Qualification of inspection personnel. All personnel performing magnetic particle inspection shall be qualified and certified in accordance with MIL-STD-410. Personnel making accept/reject decisions in accordance with the process described by this standard shall be qualified to at least a level II per MIL-STD-410. Personnel performing the processing steps described in this standard shall be qualified to at least a level I per MIL-STD-410.

4.3 Acceptance requirements. The acceptance requirements applicable to the part or group of parts shall be incorporated as part of a written procedure either specifically or by reference to other applicable documents such as MIL-STD-350 containing the necessary information. Applicable drawings or other documents shall specify the acceptable size and concentration of discontinuities for the component, with zoning of unique areas as required by design requirements. These acceptance requirements shall be as approved or as specified by the contracting agency

4.4 Written procedure. Magnetic particle inspection shall be performed in accordance with a written procedure applicable to the parts or group of parts under test. The procedure shall be in accordance with the requirements and guidelines of this standard. The procedure shall be capable of detecting the smallest rejectable discontinuities specified in the acceptance

Downloaded from http://www.everyspec.com

requirements. The written procedure may be a general one if it clearly applies to all the specified parts being tested and meets the requirements of this standard. All written procedures shall be approved by an individual qualified and certified to MIL-STD-410, Level III for magnetic particle inspection, and shall be submitted upon request to the contracting agency.

4.4.1 Elements of the written procedure. The written procedure shall include at least the following elements, either directly or by reference to the applicable documents:

a. Identification of the parts to which the procedure applies. This shall include the material and alloy of which the parts are fabricated.
b. Identification of test parts used for system performance verification (see 5.7.2 and 5.7.3).
c. Areas of the part to be examined (include a sketch if necessary).
d. Directions of magnetization to be used, the order in which they are applied, and any demagnetization procedures to be used between shots.
e. Method of establishing the magnetization (prods, yoke, cable wrap, etc).
f. Directions for positioning the item with respect to the magnetizing equipment
g. The type of magnetizing current and the equipment to be used.
h. The current level, or the number of ampere-turns, to be used and the duration of its application.
i. Part preparation required before testing.
j. Type of magnetic particle material (dry or wet, visible or fluorescent, etc.) to be used, the method and equipment to be used for its application, and, for the case of wet particles, the particle concentration limits.
k. Type of records and method of marking of parts after inspection.
l. Acceptance requirements, to be used for evaluating indications and disposition of parts after evaluation.
m. Post-inspection demagnetization and cleaning requirements.
n. The procedure identification number and the date it was written.
o. Sequence of magnetic particle inspection as related to manufacturing process operations.

4.5 Record of inspection. The results of all magnetic particle inspections shall be recorded. All recorded results shall be identified, filed, and made available to the contracting agency upon request. Records shall provide for traceability to the specific part or lot inspected, and shall identify the inspection contractor or facility and the procedures used in the inspection.

4.6 Magnetizing and demagnetizing equipment. Performance of a satisfactory magnetic particle inspection requires magnetization of the part to a specified level in a specified direction. Magnetization can be accomplished either by passing an electric current directly through the material (direct method), by inducing a current to flow in the part under test (induced current method), or by placing the material within the magnetic flux of an external source such as a coil (indirect method). The types of equipment available include yokes, portable units, mobile units, stationary units, and special application units (e.g. a unit to produce a single or multidirectional field). The types of currents used for magnetization are

Downloaded from http://www.everyspec.com

full-wave rectified alternating current, half-wave rectified alternating current, and alternating current. The equipment used shall adequately fulfill the magnetizing and demagnetizing requirements, as outlined herein, without damage to the part under test and shall include the necessary features required for safe operation.

4.7 Inspection sequence. Magnetic particle inspection shall be performed after the completion of operations that could cause surface or slightly subsurface defects. These operations include, but are not limited to, forging, heat treating, plating, passivation, cold forming, welding, grinding, straightening, machining, and proof loading. Unless otherwise approved by the contracting agency or as provided in 5.1.3, production parts shall be magnetic particle inspected before application of any coatings. Parts that have a tensile strength of 120 KSI or higher that are heat treated and subsequently electroplated, shall also be inspected after plating.

4.8 Lighting intensities.

4.8.1 Visible light intensities. Visible light shall be used when testing with nonfluorescent particles. The intensity of the visible light at the surface of the parts undergoing inspection shall be maintained at a minimum of 1000 lux (100 foot-candles). Fluorescent magnetic particle inspection shall be performed in a darkened area with a maximum ambient visible light level of 20 lux (2 foot-candles).

4.8.2 Black light intensities. The black light intensity at the examination surface shall be 1000 $\mu W/cm^2$ or greater when measured with a suitable black-light meter. Portable or hand held black lights shall produce an intensity greater than 1000 $\mu W/cm^2$ when measured at 380 mm (15 inches) from the black light source.

4.9 Materials.

4.9.1 Magnetic particle materials. The particles used in magnetic particle inspection shall be finely divided ferromagnetic materials which have been treated to impart visibility against the background of the surfaces under inspection. They may be either colored for use with visible light or coated with a fluorescent material for use with black light. The particles may be designed for use as a free flowing dry powder (dry method), for suspension at a given concentration in a suitable liquid (wet method), for suspension in a polymerizeable material (magnetic rubber method), or for suspension in a slurry (magnetic painting). The particles shall be designed to have a high magnetic permeability and a low retentivity. Careful control of particle size, shape, and material is required to obtain consistent results. The particles shall be non-toxic, free from rust, grease, paint, dirt or other deleterious material which might interfere with their proper functioning.

4.9.1.1 Dry particle requirements. Dry particles shall meet the requirements of AMS 3040. In applying AMS 3040 the particles shall show indications as listed in table I on the test ring specimen of Figure 1 using the following procedure:

Downloaded from http://www.everyspec.com

Place a conductor with a diameter between 25 and 31 mm (1 and 1.25 inches) and a length greater than 40 cm (16 inches) through the center of the ring. Center the ring on the length of the conductor. Circularly magnetize the ring by passing the current specified in table I through the conductor. Using a suitable squeeze bulb or other applicator, apply the particles to the ring surface while the current is flowing. Examine the ring within 1 minute after current application under a visible light of not less than 1000 lux (100 ft. candles). The minimum number of hole indications shall meet or exceed those specified in table I.

4.9.1.2 Wet particle requirements. Wet particles shall meet the requirements of AMS 3041, AMS 3042, AMS 3043, AMS 3044, AMS 3045, or AMS 3046, as applicable. In applying these specifications, the particles shall show indications as listed in table I on the test ring specimen of figure 1 using the following procedure:

Place a conductor with a diameter between 25 and 31 mm (1 and 1.25 inches) and a length greater than 40 cm (16 inches) through the center of the ring. Center the ring on the length of the conductor. Circularly magnetize the ring by passing the current specified in table I through the conductor. Apply the suspension to the ring using the continuous method. Examine the ring within 1 minute after current application (examination of nonfluorescent baths shall be under a visible light of not less than 1000 lux (100 ft. candles); examination of fluorescent baths shall be under a black light with a minimum intensity of 1000 $\mu W/cm^2$ at the surface). Minimum number of hole indications shall meet or exceed those specified in table I.

4.9.2 Suspension vehicles. The suspension vehicle for the wet method shall be a light petroleum distillate conforming to AMS 2641 (Type I) or to DOD-F-87935 or a suitably conditioned water that conforms to the requirements of paragraph 4.9.4. When approved by the contracting agency, AMS 2641 (Type II) may be used. The flash point and viscosity of the suspension shall be in accordance with the requirements of AMS 2641 or DOD-F-87935. The background fluorescence of the suspension vehicle shall be less than the limit specified in DOD-F-87935.

4.9.3 Particle concentration. The concentration of particles in the test bath shall be as specified in the written procedure. Particle concentrations outside the range of 0.1 to 0.4 ml in a 100 ml bath sample for fluorescent particles and 1.2 to 2.4 ml in a 100 ml bath sample for nonfluorescent particles shall not be used unless authorized by the contracting agency. Fluorescent particles and nonfluorescent particles shall not be used together.

4.9.4 Conditioned water vehicle. When water is used as a suspension vehicle for magnetic particles, it shall be suitably conditioned to provide for proper wetting, particle dispersion, and corrosion protection. Proper wetting shall be determined by a water break test (see 5.7.4.2). Generally, smoother test surfaces require a greater percentage of wetting agent be added than rough surfaces. Nonionic wetting agents are recommended. However, in all instances wetting agent additions shall be controlled by pH measurements to limit the alkalinity of the suspension to a maximum pH of 10.0 and an acidity to a minimum pH of 6.0.

Downloaded from http://www.everyspec.com

5. DETAIL REQUIREMENTS

5.1 Preparation of parts for inspection

5.1.1 Pre-inspection demagnetization. The part shall be demagnetized before inspection if prior operations have produced a residual magnetic field which will interfere with the inspection.

5.1.2 Surface cleanliness and finish. The surface of the part to be inspected shall be essentially smooth, clean, dry, and free of oil, scale, machining marks, or other contaminants or conditions which might interfere with the efficiency of the inspection.

5.1.3 Coatings. Magnetic particle inspection shall not be performed with coatings in place that could prevent the detection of surface defects in a ferromagnetic substrate. Normally such coatings include paint or chrome plate greater than 0.08 mm (0.003 inch) in thickness or ferromagnetic coatings such as electroplated nickel greater than 0.03 mm (0.001 inch) in thickness. If coatings thicker than these limits are present during inspection, it must be demonstrated that minimum allowable defects can be detected through the maximum coating thickness applied. When coatings are non-conductive, they must be removed where electrical contact is to be made.

5.1.4 Plugging and masking. Unless otherwise specified by the contracting agency, small openings and oil holes leading to passages or cavities that could entrap or remain contaminated with inspection media shall be plugged or masked with a suitable non-abrasive material which can be readily removed and, in the case of engine parts, is soluble in oil. Effective masking shall be used to protect those components, such as certain non-metallics, which may be damaged by contact with the suspension.

5.2 Magnetization methods.

5.2.1 Permanent magnets. Permanent magnets are not to be used for magnetic particle inspection unless specifically authorized by the contracting agency. When permanent magnets are used, adequate magnetic field strength shall be established according to 5.3.

5.2.2 Yokes. When using yokes (electromagnetic probes) for magnetic particle inspection, adequate magnetic field strength shall be established according to 5.3.

5.2.3 Types of magnetizing current. The types of magnetizing current used for magnetic particle inpection are full-wave rectified alternating current, half-wave rectified alternating current, and alternating current. Alternating current is to be used only for the detection of defects open to the surface. Full-wave rectified alternating current has the deepest possible penetration and must be used when inspecting for defects below the surface when using the wet magnetic particle method. Half-wave rectified alternating current is advantageous for the dry powder method because this type of current gives increased mobility and sensitivity to the particles due to its pulsating unidirectional field.

Downloaded from http://www.everyspec.com

5.2.4 Magnetic field directions. Discontinuities are difficult to detect by the magnetic particle method when they make an angle less than 45° to the direction of magnetization. To assure detection of discontinuities in any direction each part must be magnetized in at least two directions at right angles to each other. Depending on part geometry this may consist of circular magnetization in two or more directions, of both circular and longitudinal magnetization, or of longitudinal magnetization in two or more directions. Exceptions necessitated by part geometry, size or other factors require specific approval of the contracting agency. Multidirectional magnetization may be used to fulfill the requirement for magnetization in two directions if demonstrated that it is effective in all critical areas. Artificial flaws (see figures 6 and 7) may be used to establish magnetic field direction.

5.2.5 Multidirectional magnetization. With suitable circuitry a multidirectional field in a part may be established (for example, by selectively switching the magnetizing current between contact pairs positioned approximately 90 degrees apart). In using this method, the particle application must be timed so that the magnetization reaches its full value in all directions during the time particles are mobile on the surface under test. (see 5.4.5, 5.2.4).

5.2.6 Direct magnetization. Direct magnetization is accomplished by passing current directly through the part under test. Electrical contact is made to the part using head and tail stock, prods, clamps, magnetic leeches, or by other means. Precaution shall be taken to assure that the electrical current is not flowing while contacts are being applied or removed and that excessive heating does not occur in the contact area. Unless otherwise specified by the contracting agency, prods shall not be used for inspection of aerospace components (flight hardware) or on finished surfaces.

5.2.7 Indirect magnetization. Indirect part magnetization uses preformed coils, cable wraps, yokes, or a central conductor to produce a magnetic field of suitable strength and direction to magnetize the part under test.

5.2.8 Induced current magnetization. Induced current magnetization (toroidal or circumferential field) is accomplished by inductively coupling a part to an electrical coil to create a suitable current flow in the part as illustrated in figure 2. This method is often advantageous on ring shaped parts with a diameter to thickness ratio greater than 5, especially where elimination of arcing or burning is of vital importance.

5.3 Magnetic field strength. The applied magnetic field shall have sufficient strength to produce satisfactory indications but must not be strong enough to cause masking of relevant indications by nonrelevant accumulations of magnetic particles. Factors which determine the required field strength include the size, shape, and magnetic permeability of the part, the technique of magnetization, the method of particle application, and the type and location of defects sought. Adequate magnetic field strength may be determined by one or a combination of three methods:

a) by testing parts having known or artificial defects of the type, size, and location specified in the acceptance requirements
b) by using a Hall-effect probe gaussmeter capable of measuring the peak values of the tangential field

Downloaded from http://www.everyspec.com

c) by use of the formulas given in paragraphs 5.3.1.1 through 5.3.1.4.4.

When using a Hall-effect probe gaussmeter, tangential applied field strengths in the range of 2.4 to 4.8 kAm^{-1} (30 to 60 gauss) are adequate field strengths for magnetic particle inspection (assure that field strengths in this range are present in all areas to be inspected on the part, see note 6.1). When using the formulas given in paragraphs 5.3.1.1 through 5.3.1.4.4, current levels may be adjusted to values verified to be in conformance with a 2.4 to 4.8 KAm^{-1} (30 to 60) gauss tangential field strength.

5.3.1 Magnetization current levels. The current values given are peak current values and apply directly to full-wave rectified current. For other types of current, the operator's manual or the equipment manufacturer should be consulted to determine what correction factor, if any, is to be used to convert the meter reading to equivalent peak current.

5.3.1.1 Prod current levels. When using prods on material 19 mm (3/4 inch) in thickness or less, 3.5 to 4.5 amperes per mm of prod spacing (90 to 115 A/in) shall be used. For material greater than 19 mm (3/4 inch) in thickness, 4.0 to 5.0 amperes per mm of prod spacing (100 to 125 A/in) shall be used. Prod spacing shall not be less than 50 mm (2 inches) or greater than 200 mm (8 inches). The effective width of the magnetizing field when using prods is 1/4 of the prod spacing on each side of a line drawn through the prod centers.

5.3.1.2 Direct circular magnetization. When magnetizing by passing current directly through the part (i.e. using "head shots") the current shall be from 12 A per mm of part diameter to 32 A per mm of part diameter (300 to 800 A/in). The diameter of the part shall be taken as the largest distance between any two points on the outside circumference of the part. Normally currents will be 20 A per mm (500 A/in) or lower with the higher currents (up to 800 A/in) being used to inspect for inclusions or to inspect low permeability alloys such as precipitation hardening steels. For tests used to locate inclusions in precipitation hardening steels even higher currents, up to 40 A per mm (1000 A/in) may be used.

5.3.1.3 Central conductor circular magnetization. Circular magnetization may be provided by passing current through a conductor which passes through the inside of the part. In this case alternating current is to be used only when the sole purpose of the test is to inspect for surface discontinuities on the inside surface of the part. If only the inside of the part is to be inspected, the diameter shall be the largest distance between two points, 180 degrees apart on the inside circumference. Otherwise, the diameter is determined as in paragraph 5.3.1.2.

5.3.1.3.1 Centrally located conductor. When the axis of the central conductor is located near the central axis of the part the same current levels as given in paragraph 5.3.1.2 ("Direct circular magnetization") shall apply.

5.3.1.3.2 Offset central conductor. When the conductor passing through the inside of the part is placed against an inside wall of the part, the current levels as given in paragraph 5.3.1.2 ("Direct circular magnetization") shall apply except that the diameter shall be considered the sum of the diameter of the central conductor and twice the wall thickness. The distance

Downloaded from http://www.everyspec.com

along the part circumference (interior or exterior) which is effectively magnetized shall be taken as four times the diameter of the central conductor as illustrated in figure 3. The entire circumference shall be inspected by rotating the part on the conductor, allowing for approximately a 10 percent magnetic field overlap.

5.3.1.4 Longitudinal magnetization using coils. Longitudinal magnetization is often accomplished by passing current through a coil encircling the part, or section of the part, to be tested (i.e. by using a "coil shot"). This produces a magnetic field parallel to the axis of the coil. For low or intermediate fill factor coils the effective field extends a distance on either side of the coil center approximately equal to the radius of the coil(see figure 4). For cable wrap or high fill factor coils, the effective distance of magnetization is 230 mm (9 inches) on either side of the coil center (see figure 5). For parts longer than these effective distances, the entire length shall be inspected by repositioning the part within the coil, allowing for approximately 10 percent effective magnetic field overlap.

5.3.1.4.1 Longitudinal magnetization with low fill factor coils. When the cross sectional area of the coil is 10 or more times the cross sectional area of the part being inspected, then the product of the number of coil turns, N, and the current in amperes through the coil, I, shall be:

a. For parts positioned to the side of the coil;

$$NI = \frac{K}{L/D} \quad (\pm 10\ \%)$$

where K = 45,000 ampere turns
L = length of the part
D = diameter of the part (measured in the same units as the length)

b. For parts positioned in the center of the coil;

$$NI = \frac{KR}{(6L/D) - 5} \quad (\pm 10\ \%)$$

where R = radius of the coil in mm (or in inches)
K = 1690 ampere turns per mm (43,000 ampere turns per inch if R is measured in inches)
L = the length of the part
D = the diameter of the part (measured in the same units as the length)

If the part has hollow portions replace D with D_{eff} as given in Paragraph 5.3.1.4.4. These formulas hold only if L/D is greater than 2 and less than 15. If L/D is less than 2, pole pieces (pieces of ferromagnetic material with the same diameter as the part being tested) shall be placed on each end of the part to effectively increase L/D to 2 or greater. If L/D is greater than 15, the value 15 shall be substituted for L/D.

Downloaded from http://www.everyspec.com

5.3.1.4.2 Longitudinal magnetization with cable wrap or high fill factor coils. When the cross sectional area of the coil is less than twice the cross sectional area (including hollow portions) of the part under test, then the product of the number of coil turns, N, and the current in amperes through the coil, I, shall be:

$$NI = \frac{K}{(L/D)+2} \qquad (\pm 10\ \%)$$

where K = 35,000 ampere turns
L = the length of the part
D = the diameter of the part (measured in the same units as the length)

If the part has hollow portions replace D with D_{eff} as given in Paragraph 5.3.1.4.4. This formula holds only if L/D is greater than 2 and less than 15. If L/D is less than 2, pole pieces (pieces of ferromagnetic material with the same diameter as the part being tested) shall be placed on each end of the part to effectively increase L/D to greater than 2. If L/D is greater than 15, the value 15 shall be substituted for L/D.

5.3.1.4.3 Longitudinal-magnetization for intermediate fill factor coils. When the cross sectional area of the coil is between two times and ten times the cross sectional area of the part being inspected, the product of the number of coil turns, N, and the current through the coil, I, shall be:

$$NI = (NI)_h \frac{10-\tau}{8} + (NI)_e \frac{\tau-2}{8}$$

where $(NI)_e$ = the value of NI calculated for low fill factor coils using 5.3.1.4.1

$(NI)_h$ = the value of NI calculated for high fill factor coils using 5.3.1.4.2

τ = the ratio of cross sectional area of the coil to the cross section area of the part. (For example, if the coil is 10 inches in diameter and the part is a rod 5 inches in diameter $\tau = (\pi \cdot 5^2)/(\pi \cdot 2.5^2) = 4.$)

5.3.1.4.4 Calculating the L/D ratio for a hollow or cylindrical part. When calculating the L/D ratio for a hollow or cylindrical part, D shall be replaced with an effective diameter, D_{eff}, calculated using:

$$Deff = 2\,[(A_t - A_h)/\pi]^{1/2}$$

where A_t = the total cross sectional area of the part
A_h = the cross sectional area of the hollow portions of the part

Downloaded from http://www.everyspec.com

For cylindrical part this is equivalent to:

$$D_{eff} = [(OD)^2 - (ID)^2]^{1/2}$$

where OD = the outside diameter of the cylinder.
ID = the inside diameter of the cylinder.

5.4 Particle application.

5.4.1 Continuous method. In the dry continuous method, magnetic particles are applied to the part while the magnetizing force is present. In the wet continuous method the magnetizing current shall be applied simultaneously with or immediately after diverting suspension from the part. Application of the magnetic particles (see 5.4.4 and 5.4.5) and the magnetization method shall be as prescribed in the paragraphs referenced herein.

5.4.2 Residual magnetization method. In the residual magnetization method the magnetic particles are applied to the test part after the magnetizing force has been discontinued. The residual method is not as sensitive as the continuous method but it can be useful, for example, to detect in-service induced fatigue cracks on the surface of material with a high retentivity or as an interpretation aid. It is also useful for inspection of parts in areas where, because of geometric constraints, the continuous method cannot be used. The residual method shall be used only when specifically approved by the contracting agency or when it has been documented that it can detect known or artificial defects in test parts. The test parts shall have the same material and processing steps as, and similar geometry to, the actual parts being inspected.

5.4.3 Prolonged magnetization. When using polymers, slurries, or paints, prolonged or repeated periods of magnetization are necessary because of lower magnetic particle mobility in the high-viscosity vehicles.

5.4.4 Dry magnetic particle application. When using dry particles the flow of magnetizing current shall be initiated prior to the application of the magnetic particles to the surface under test and terminated after powder application has been completed and any excess blown off. The duration of the magnetizing current shall be at least 1/2 second and short enough to prevent any damage to the part due to overheating or other causes. Dry powder shall be applied in a manner such that a light, uniform dust-like coating settles on the surface of the test part while the part is being magnetized. Specially designed powder blowers or shakers using compressed air or hand power shall be used. The applicators shall introduce the particles into the air in a manner such that they reach the part surface in a uniform cloud with a minimum of force. After the powder is applied, and before the magnetizing force is removed, excess powder shall be removed by means of a dry air current with sufficient force to remove the excess particles, but not strong enough to disturb particles held by a leakage field that is indicative of discontinuities. In order to recognize the broad, fuzzy, lightly held powder patterns formed by near surface discontinuities, the formation of indications must be carefully observed during powder application and during removal of the excess powder. Sufficient time for formation and examination of indications shall be allowed during the testing process. The dry particle method shall not be used to inspect aerospace components (flight hardware) without specific approval of the contracting agency.

Downloaded from http://www.everyspec.com

5.4.5 Wet magnetic particle application. Fluorescent or nonfluorescent particles suspended in a liquid vehicle at the required concentration shall be applied either by gently spraying or flowing the suspension over the area to be inspected. Proper sequencing and timing of part magnetization and application of particle suspension are required to obtain proper formation and retention of indications. This generally requires that the stream of suspension be diverted from the part simultaneously with, or slightly before, energizing the magnetic circuit. The magnetizing current shall be applied for a duration of at least 1/2 second for each application with a minimum of two shots being used. The second shot should follow the first in rapid succession. It should come after the flow of suspension has been interrupted, and should occur before the part is examined for indications. Under special circumstances, such as the use of automated equipment and/or for critical parts, the 1/2 second duration and/or the 2 shot requirement may be waived provided it is demonstrated that the test procedure can detect known defects in representative test parts (see 5.3a). Care shall be exercised to prevent any damage to the part due to overheating or other causes. Weakly held indications on highly finished parts are readily washed away and hence care must be exercised to prevent high-velocity flow over critical surfaces.

5.4.6 Magnetic slurry/paint application. Magnetic paints or slurries are applied to the part with a brush, squeeze bottle or aerosol can before or during the magnetization operation. This method is for special applications, such as overhead or underwater examination. This method shall be used only when specifically approved by the contracting agency.

5.4.7 Magnetic polymer application. Polymerizable material containing magnetic particles shall be held in contact with the test part during the period of its cure. Before curing takes place and while the magnetic particles are still mobile, the part shall be magnetized to the specified level. This requires prolonged or repeated periods of magnetization. This method is for special applications, such as bolt holes, which cannot be readily tested by the wet or dry method and shall be used only when specifically approved by the contracting agency. MIL-I-83387 establishes the inspection process for magnetic rubber.

5.5 Recording of indications. When required by the written procedure, the location of all rejectable indications shall be marked on the part and permanent records of the location, direction and frequency of indications may be made by one or more of the following methods.

5.5.1 Written description. By recording the location, length, direction, and number of indications by a sketch or in a tabular form.

5.5.2 Transparent tape. For dry particle indications, by applying transparent adhesive-backed tape to which the indications will adhere and placing it on an approved form along with information giving its location on the part.

5.5.3 Strippable film. By covering the indication with a spray-on strippable film that fixes the indications in place and placing the resultant reproduction on an approved form along with information giving its location on the part.

Downloaded from http://www.everyspec.com

5.5.4 Photography. By photographing or video recording the indications themselves, the tape, or the strippable film reproduction and placing the photograph on a tabular form along with information giving its location on the part.

5.6 Post-inspection demagnetization and cleaning. Unless directed otherwise by the contracting agency, all parts shall be demagnetized, cleaned, and corrosion protected after final magnetic particle inspection.

5.6.1 Demagnetization. When using alternating current demagnetization the part shall be subjected to a field with a peak value greater than, and in nearly the same direction as, the field used during inspection. This alternating current field is then gradually decreased to zero. When using an alternating current demagnetizing coil, a suggested procedure is to hold the part about 30 cm (1 ft) in front of the coil and then move it slowly and steadily through the coil and at least 90 cm (3 ft) beyond the end of the coil. Repeat this process as necessary. Rotate and tumble parts of complex configuration while passing through the field of the coil. When using direct current demagnetization, the initial field shall be higher than, and in nearly the same direction as, the field reached during magnetization. The field shall then be reversed, decreased in magnitude, and the process repeated (cycled) until an acceptably low value of residual field is reached. Whenever possible parts which have been circularly magnetized shall be magnetized in the longitudinal direction before being demagnetized. After demagnetization, a magnetic field meter shall not detect fields with an absolute value greater than 240 Am^{-1} (3 gauss) anywhere on the part.

5.6.2 Post-inspection cleaning. Cleaning shall be by use of a suitable solvent, air blower, or by other means. Parts shall be inspected to ensure that the cleaning procedure has removed magnetic particle residues from coolant holes, crevices, passage ways, etc., since such residues could have an adverse effect on the intended use of the part. Care shall be taken to remove all plugs, masking or other processing aids that may affect the intended use of the part. Parts shall be protected from any possible corrosion or damage during the cleaning process and shall be treated to prevent the occurrence of corrosion after final inspection.

5.7 Quality control.

5.7.1 System performance verification. The overall performance of the magnetic particle inspection system including the equipment, materials and the lighting environment being used, shall be verified initially and at regular intervals thereafter. The required verification intervals are stated in table II. Records of the verification results shall be maintained. Current and voltage measuring devices, ammeter shunts, timers, and gaussmeters used in the verification shall comply with the requirements of MIL-STD-45662.

5.7.2 Use of test part with discontinuities. A reliable method for inspection system verification is the use of representative test parts containing defects of the type, location, and size specified in the acceptance requirements. If magnetic particle indications can be produced and identified in these representative parts, then the overall system performance is verified. Parts used for verification will be demagnetized and thoroughly cleaned following the inspection and checked under black or white light, as appropriate to the inspection process, to ensure residual indications do not remain.

Downloaded from http://www.everyspec.com

5.7.3 Fabricated test parts with artificial discontinuities. When actual production parts with known defects of the type, location and size needed for verification, are not available or are impractical, then, fabricated test parts with artificial defects shall be used. Artificial defects may be fabricated to meet a particular need or may be commercially available magnetic field indicators shown in figures 6 and 7 or the Ketos ring as defined in figure 1. All applicable conditions for the use of such test parts, as described in 5.7.2, shall apply.

5.7.4 Suspension vehicle tests. (Not required for aerosol can solutions)

5.7.4.1 Concentration tests. Particle concentration and contamination shall be determined upon start up, at regular intervals thereafter, and whenever the bath is changed or adjusted. The required testing intervals are stated in table II.

5.7.4.1.1 Determination of wet particle concentration. Agitate the particle suspension a minimum of 30 minutes to insure a uniform distribution of particles throughout the bath. Place a 100 ml sample of the agitated suspension in a pear-shaped centrifuge tube (of the size and shape specified in ASTM D96, except graduated to 1 ml in 0.05 ml increments). Demagnetize the sample and allow the tube to stand undisturbed for at least 60 minutes if using the petroleum distillate specified in AMS 2641 or 30 minutes settling time for conditioned water suspension. Read the volume of settled particles. If the concentration is out of the tolerance stated in the written procedure (or that given in paragraph 4.9.3) add particles or suspension vehicle, as required, and redetermine the particle concentration. If the settled particles appear to be loose agglomerates rather than a solid layer, take a second sample. If the second sample also appears agglomerated, replace the entire suspension. Thirty minute settling times, or other accelerated tests, may be used if they have been verified to give results equivalent to the procedure described in this paragraph.

5.7.4.1.2 Determination of wet particle contamination. Perform the tests specified in paragraph 5.7.4.1.1. In addition, for fluorescent baths, examine the liquid directly above the precipitate with black light. The liquid shall be essentially nonfluorescent. Examine the graduated portion of the tube both under black light (for fluorescent baths only) and under visible light (for both fluorescent and nonfluorescent baths) for striations or bands, different in color or appearance. Bands or striations may indicate contamination. If the total volume of the contaminates, including bands or striations, exceeds 30% of the volume of magnetic particles, or if the liquid is noticeably fluorescent, the bath shall be replaced.

5.7.4.2 Water break test. In this test of water based vehicles a clean part with a surface finish the same as the parts to be tested is flooded with the conditioned water and the appearance of the surface is noted after flooding is stopped. If a continuous even film forms over the entire part, sufficient wetting agent is present. If the film of suspension breaks, exposing bare surface, insufficient wetting agent is present or the part has not been adequately cleaned.

Downloaded from http://www.everyspec.com

5.7.5 Equipment calibration. Magnetic particle testing equipment shall be checked for performance and accuracy at time of purchase and at intervals thereafter as given in table II, whenever malfunction is suspected or when specified by the contracting agency, and whenever electrical maintenance which might affect equipment accuracy is performed.

5.7.5.1 Ammeter accuracy. To check the equipment ammeter, a calibrated ammeter shall be connected in series with the output circuit. Comparative readings shall be taken at three output levels encompassing the useable range of the equipment. The equipment meter reading shall not deviate by more than ±10 percent of full scale from the current value shown by the calibrated ammeter (when measuring half wave rectified alternating current, the current values shown by the calibrated direct current ammeter reading shall be doubled). The ammeter should be checked according to the time frame indicated in table II.

5.7.5.2 Timer control check. On equipment using a timer to control current duration, the timer should be checked to within ±0.1 second using a suitable electronic timer.

5.7.5.3 Magnetic field quick break check. On equipment which utilizes a quick-break feature, proper functioning of this circuit shall be verified. The test may be performed using a suitable oscilloscope or other applicable method as specified by the equipment manufacturer.

5.7.5.4 Dead weight check. Yokes and permanent magnets (when allowed) shall be dead weight tested at intervals as stated in table II. Alternating current yokes shall have a lifting force of at least 45 N (10 pounds) with a 50 to 100 mm (2 to 4 inch) spacing between legs. Direct current yokes shall have a lifting force of at least 135 N (30 pounds) with a 50 to 100 mm (2 to 4 inch) spacing between legs or 225 N (50 pounds) with a 100 to 150 mm (4 to 6 inch) spacing.

5.8 Marking of inspected parts. Unless otherwise specified by the contracting agency, parts which have been accepted using magnetic particle inspection shall be marked in accordance with the applicable drawing, purchase order, contract or as specified herein. Marking shall be applied in such a manner and location as to be harmless to the part. The identification shall not be obliterated or smeared by subsequent handling and, when practicable, shall be placed in a location which will be visible after assembly. When subsequent processing would remove the identification, the applicable marking shall be affixed to the record accompanying the finished parts or assembly. Bolts and nuts and other fastener products may be identified as having met the requirements of magnetic particle inspection by conspicuously marking each package.

5.8.1 Impression stamping, laser marking, or vibro engraving. Impression stamping, laser marking, or vibro engraving shall be used when permitted or required by the applicable written procedure, detail specification or drawing, or when the nature of the part is such as to provide for impression stamping of part numbers or other inspector's markings. Impression stamping shall be located only in the area provided adjacent to the part number or inspector's stamp unless otherwise specified by the contracting agency.

Downloaded from http://www.everyspec.com

5.8.2 Etching. When impression stamping or vibro engraving is prohibited, parts shall be etched using an etching fluid or other means and a method of application acceptable to the contractor. The etching process and location shall not adversely affect the functioning of the part.

5.8.3 Dyeing. When stamping, vibro engraving or etching is not permissible, identification shall be accomplished by dyeing.

5.8.4 Other identification. Other means of identification such as tagging, shall be used for parts which have a construction or function precluding the use of stamping, laser marking, vibro engraving or etching, as in the case of completely ground or polished balls, rollers, pins, or bushings.

5.8.5 Identifying symbols and color markings.

5.8.5.1 100-percent inspection. When items are inspected and accepted by 100-percent inspection, each item shall be marked as follows:

5.8.5.1.1 Dyeing. When dyeing is applicable, a dye of acceptable adherence which is predominately blue (per FED-STD-595) shall be employed. However, if a color conflict is incurred with any other method, magnetic particle inspection can be indicated by two adjacent blue dots or other suitable means.

5.8.5.1.2 Stamping, laser marking, vibro engraving or etching. When impression stamping, laser marking, vibro engraving or etching is used to mark 100-percent inspected parts, the letter "M" with a circle around it shall be employed.

5.8.5.2 Lot inspection. When items are accepted by means of a sampling procedure, each item of an accepted lot shall be marked as follows:

5.8.5.2.1 Dyeing. When dyeing is applicable, a dye of acceptable adherence which is predominately orange per FED-STD-595 shall be employed.

5.8.5.2.2 Stamping,vibro engraving or etching. When impression stamping, laser marking, vibro engraving or etching is used to mark lot-inspected parts, the letter "M" shall be employed.

5.9 Eye glasses. When using fluorescent materials, inspectors shall not wear eye glasses permanently tinted or equipped with light restrictive or light sensitive lenses (i.e. lenses that darken when exposed to ultraviolet light or sunlight). This is not intended to prohibit the use of eyeglasses with lenses treated to absorb UV light.

5.10 Aircraft quality steel cleanliness. The inspection of aircraft-quality steel for cleanliness using magnetic particle inspection shall be as specified in AMS 2300, AMS 2301, or AMS 2303 as appropriate to the type of steel being inspected. However, inspection of parts fabricated from this material shall be in accordance with the requirements of this document.

5.11 Acceptance requirements. Methods for establishing acceptance requirements for large crankshaft forgings are discussed in ASTM A456.

Downloaded from http://www.everyspec.com

Methods for establishing requirements for steel forgings are discussed in ASTM A275. Methods for classifying metal castings are given in MIL-STD-2175. MIL-M-350 provides a classification scheme for ferromagnetic forgings, castings, extrusions and weldments.

5.12 Safety. Safe handling of magnetic particles (wet or dry), oil vehicles water baths, and water conditioner concentrates are governed by the suppliers' Material Safety Data Sheets (MSDS). Material Safety Data Sheets, conforming to 29 CFR 1910.1200, or equivalent, must be provided by the supplier to any user and shall be prepared in accordance with FED-STD-313.

5.12.1 Flammability. Flash point of oil vehicles shall be in accordance with AMS 2641 or DOD-F-87935. The suppliers' MSDS shall certify the flash point.

5.12.2 Personnel hazards. Precautions against inhalation, skin contact, and eye exposure are detailed in the suppliers' MSDS. These precautions shall be observed.

5.12.3 Electrical hazards. Magnetizing equipment shall be properly maintained to avoid personnel hazards from electrical short circuits. Care must be taken to reduce arcing and possible ignition of oil baths.

5.12.4 Black light. It is recommended that the intensity of black light incident on unprotected skin or eyes not exceed 1000 $\mu W/cm^2$. Cracked or broken UV filters shall be immediately replaced. Broken bulbs can continue to radiate UV energy and must be replaced immediately. Spectacles designed to absorb UV wavelength radiation are suggested for close, high black light intensity inspection.

5.13 Dark adaptation. Personnel must wait at least one minute after entering a darkened area for their eyes to adjust to the low level lighting before performing fluorescent magnetic particle inspection.

Downloaded from http://www.everyspec.com

6. NOTES

(This section contains information of a general or explanatory nature that may be helpful, but is not mandatory.)

6.1 Measurement of tangential field strength. Care must be exercised when measuring the tangential applied field strengths specified in paragraph 5.3. The active area of the Hall-effect probe should be no larger than 5 mm by 5 mm and should have a maximum center location 5 mm from the part surface. The plane of the hall effect element must be perpendicular to the surface of the part at the location of measurement to within 5 degrees. This is difficult to accomplish by hand orientation and the probe should be held in a jig or fixture of some type. If the current is being applied in shots, or if alternating current or half wave rectified alternating current is being used, the gaussmeter should be set to read the peak value during the shot. The gaussmeter should have a frequency response of 0 to 300 Hz or higher. The direction and magnitude of the field can be determined by two measurements made at right angles. The gaussmeter probe leads should be shielded or twisted to prevent reading errors due to voltage induced during the large field changes encountered during magnetic particle inspection.

6.2 Subject term (key word) listing.

Magnetic particle testing
Nondestructive testing

Custodians:
Army - MR
Navy - AS
Air Force - 11

Review activities:
Army - AR, AV, EA, MI
Navy - SH
Air Force - 99, 70, 80, 82, 24, 84

User activities:
Army - AT, AL, ME, TE, AR
Navy - OS
Air Force - 71

Preparing Activity:
Army - MR

Project NDTI-0127

(WP# ID-0381A/DISC-0136B. FOR MTL USE ONLY)

Downloaded from http://www.everyspec.com

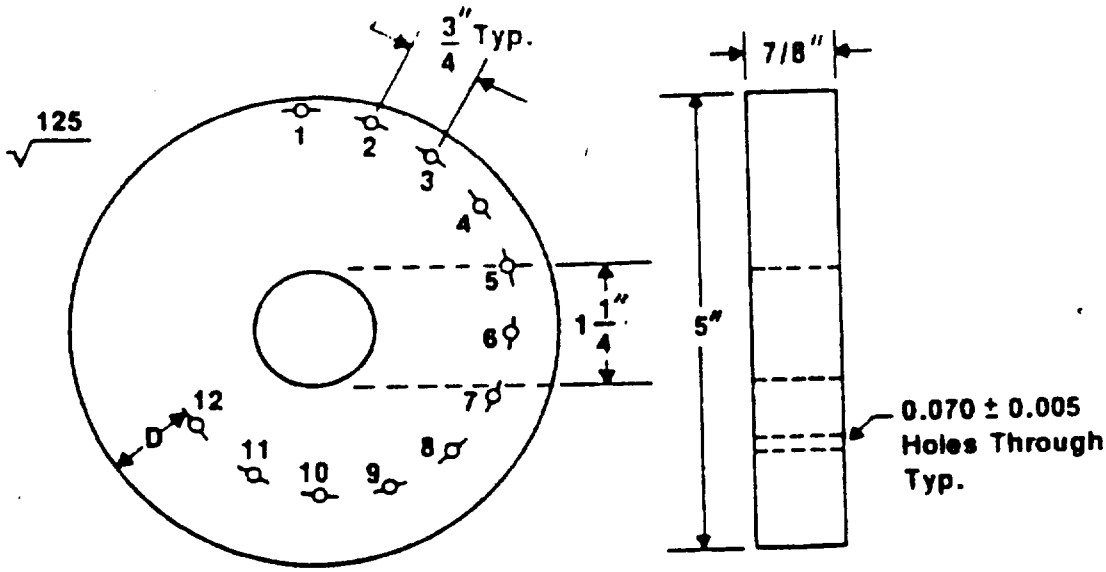

Notes: All Tolerances are ±0.03" Except Where Shown
Hole Numbers 8-12 are Optional

Hole	1	2	3	4	5	6	7	8	9	10	11	12
D, inches ±0.005	.07	.14	.21	.28	.35	.42	.49	.56	.63	.70	.77	.84

FIGURE 1. KETOS tool steel ring for use in magnetic particle system verification and testing of magnetic particles. All dimensions are in inches. Material shall be AISI O1 tool steel from annealed round stock. Hardness shall be 90-95 Rockwell B.

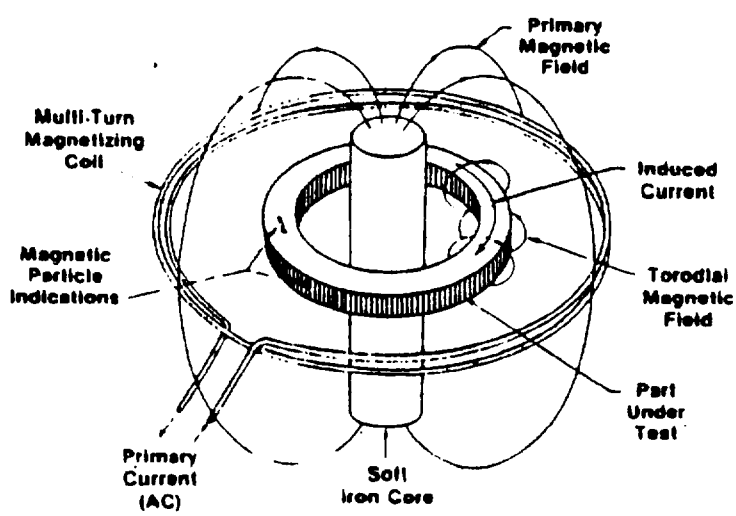

FIGURE 2. Example of induced current magnetization. The primary current sets up an oscillating magnetic field. This primary magnetic field induces a current in the ring shaped part under test.

Downloaded from http://www.everyspec.com

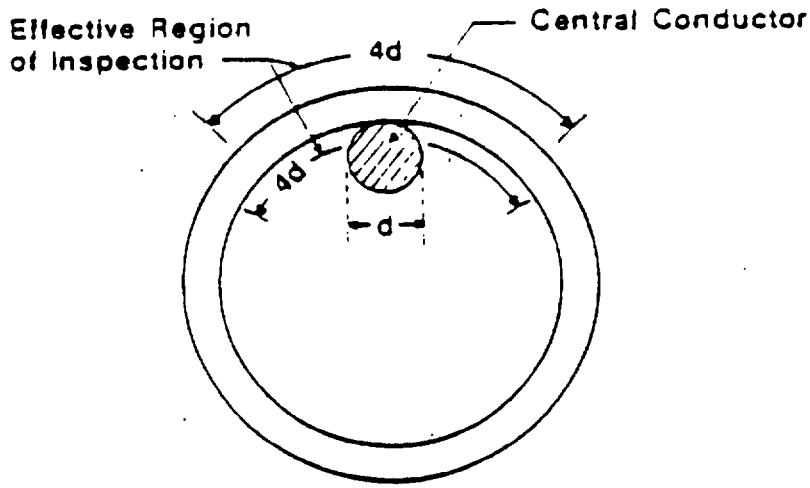

Figure 3. The effective region of inspection when using an offset central conductor is equal to four times the diameter of the conductor as indicated.

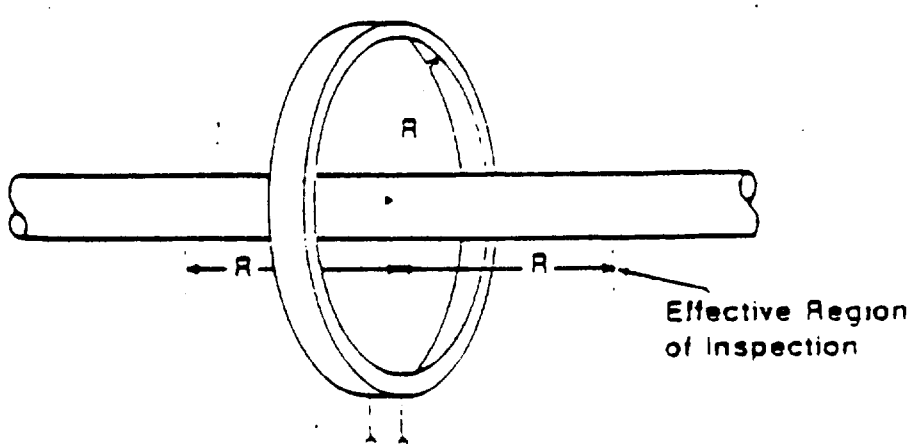

Figure 4. Effective region of inspection for a low fill-factor coil.

Downloaded from http://www.everyspec.com

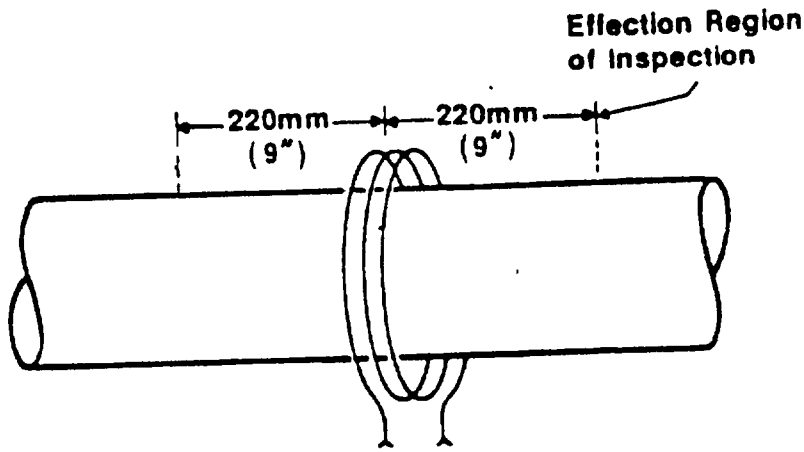

FIGURE 5. Effective region of inspection for a high fill-factor coil

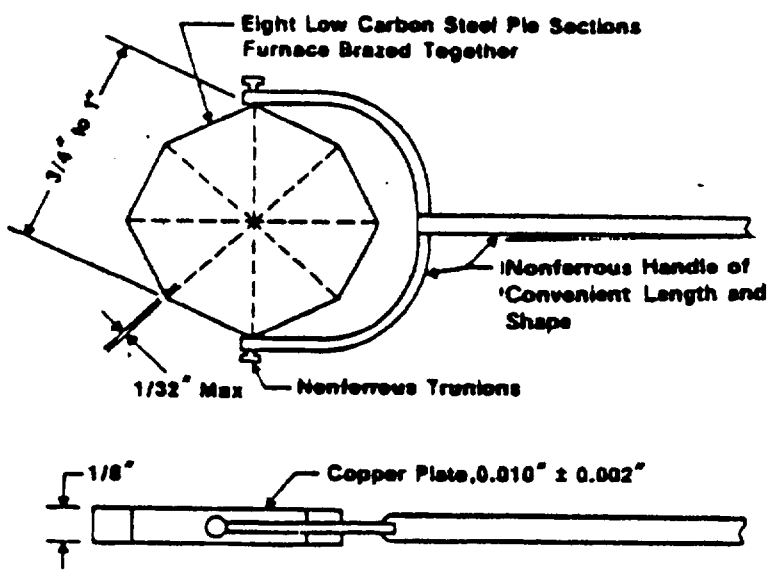

FIGURE 6. Pie-field indicator for use in magnetic particle inspection system verification. All dimensions are in inches. Eight low carbon steel pie shaped sections are furnace brazed together and copper plated.

Downloaded from http://www.everyspec.com

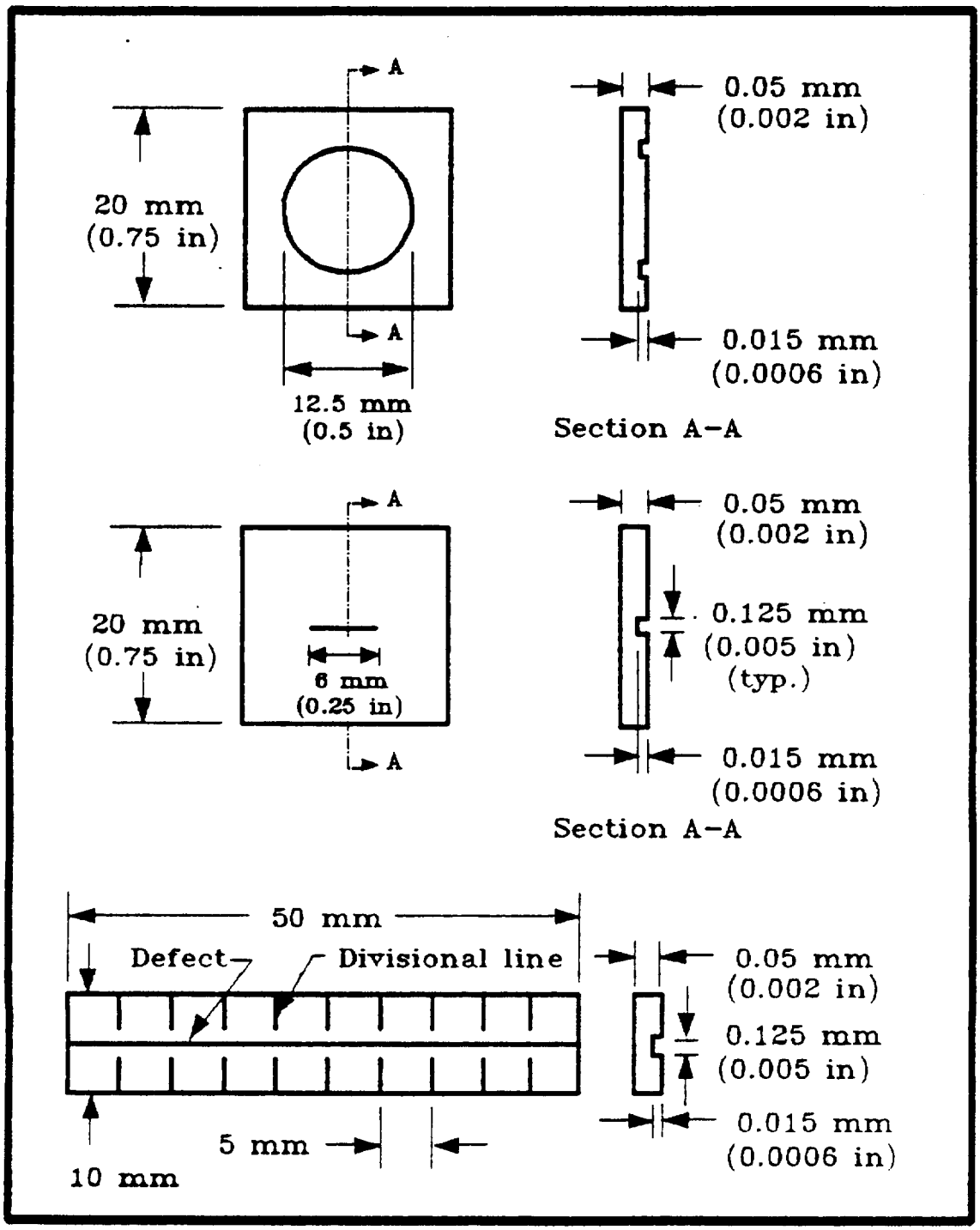

Figure 7. Examples of artificial flaw shims used in magnetic particle inspection system verification. (Not drawn to scale.) The shims are made of low carbon steel (e.g. 1005 steel foil). The artificial flaw is etched or machined on one side of the foil to a depth of 30 percent of the foil thickness. In use, the shims are firmly attached to the test part (e.g. with tape around the edges) with the flaw towards the part.

Downloaded from http://www.everyspec.com

TABLE I. Required indications when using the ring specimen of figure 1.

Particles Used	Central Conductor Full Wave Rectified Alternating Current Amperage	Minimum Number of Holes Indicated
Wet suspension, fluorescent or nonfluorescent	1400	3
	2500	5
	3400	6
Dry powder	1400	4
	2500	6
	3400	7

TABLE II. Required verification intervals.

ITEM	MAXIMUM TIME BETWEEN VERIFICATIONS	REFERENCE PARAGRAPH
Lighting:		
Black light intensity	1 week	4.8.2
Visible light intensity	1 week	4.8.1
Background visible light intensity	1 week	4.8.1
System performance using test piece or ring specimen of figure 1	1 day	5.7
Wet particle concentration	8 hours, or every shift change	5.7.4.1.1
Water break test	1 day	5.7.4.2
Wet particle contamination	1 week	5.7.4.1.2
Equipment calibration/check:		
Ammeter accuracy	6 months	5.7.5.1
Timer control	6 months	5.7.5.2
Quick break	6 months	5.7.5.3
Dead weight check	6 months	5.7.5.4

Note: The maximum time between verifications may be extended when substantiated by actual technical stability/reliability data.

Downloaded from http://www.everyspec.com

STANDARDIZATION DOCUMENT IMPROVEMENT PROPOSAL

DOCUMENT NUMBER	2. DOCUMENT TITLE
MIL-STD-1949A	Inspection, Magnetic Particle

3a. NAME OF SUBMITTING ORGANIZATION	4. TYPE OF ORGANIZATION *(Mark one)*
	☐ VENDOR
b. ADDRESS *(Street, City, State, ZIP Code)*	☐ USER
	☐ MANUFACTURER
	☐ OTHER *(Specify)*: _____

5. PROBLEM AREAS

a. Paragraph Number and Wording:

b. Recommended Wording:

c. Reason/Rationale for Recommendation:

6. REMARKS

NAME OF SUBMITTER *(Last, First, MI)* – Optional	b. WORK TELEPHONE NUMBER *(Include Area Code)* – Optional
c. MAILING ADDRESS *(Street, City, State, ZIP Code)* – Optional	8. DATE OF SUBMISSION *(YYMMDD)*

DD FORM 1426 PREVIOUS EDITION IS OBSOLETE.