MIL-STD-1863A

23 January 1985

SUPERCEDING
MIL-STD-1863
2 DEC 1982

MILITARY STANDARD

INTERFACE DESIGNS AND DIMENSIONS FOR FIBER OPTIC INTERCONNECTION DEVICES

FSC 6060

DEPARTMENT OF DEFENSE
Washington, DC 20301

INTERFACE DESIGNS AND DIMENSIONS FOR FIBER OPTIC INTERCONNECTION DEVICES

MIL-STD-1863A

1. This Military Standard is approved for use by all Departments and Agencies of the Department of Defense.

2. Beneficial comments (recommendations, additions, deletions) and any pertinent data which may be of use in improving this document should be addressed to: Commander, U.S. Army Communications-Electronics Command, ATTN: DRSEL-ED-TO, Fort Monmouth, NJ 07703 by using the self-addressed Standardization Document Improvement Proposal (DD Form 1426) appearing at the end of this document or by letter.

CONTENTS

FIGURES

FIGURES - Continued.

1. SCOPE

1.1 Purpose. This standard gives the standard interface designs and dimensions and termination types for use in fiber optic connectors and couplers for general military applications. This document was prepared in order to standardize and minimize variations in design to enhance interchangeability and intermateability of items in new systems.

1.2 Application. This design standard is intended to be used in the design, drawing, specification development and component selection of fiber optic interconnecting devices.

1.3 Classification. Fiber optic interconnection devices are classified as follows.

1.3.1 Types and classes. Fiber optic interconnection devices are of the following types and classes:

Series 1, 3, 4, and 5; Type I - Multi-fiber interconnect interface.

Class A - Plug/Receptacle set, all fiber optics.

Class B - Hermaphroditic, all fiber optics.

Series 1, 2, 3, and 4; Type II - Single fiber interconnect interface.

Class A - Plug/Receptacle set.

Class B - Hermaphroditic.

Series 1, 3, 4, 5, styles R, and S; Type III - Hybrid (terminates both optical fibers and electrical conductors).

Class A - Plug/Receptacle.

Class B - Hermaphroditic.

1.3.2 Series. The following series apply to types I, II, and III interfaces.

Series 1 - Circular fiber optic connector for shipboard use.

Series 2 - Circular fiber optic connector, single fiber (not applicable to types I and III).

Series 3 - Circular fiber optic connector, general purpose; suitable for blind mating, high vibration and high temperature applications.

Series 4 - Circular fiber optic connector, general purpose; suitable for blind mating, quick disconnect and high temperature applications.

Series 5 - Rectangular fiber optic connector.

1.3.3 Styles. The following styles are applicable to type III interfaces only.

Style R - Connector having electrical contacts or fiber optic termini that are interchangeable in an existing design cavity.

Style S - Connector having combinations of electrical contacts and fiber optic termini that are fixed for a particular cavity.

2. REFERENCED DOCUMENTS

2.1 Issues of documents. The following documents of the issue in effect on date of invitation for bids or request for proposal, form a part of this standard to the extent specified herein.

SPECIFICATIONS

MILITARY

MIL-C-22520 - Crimping Tools, Terminal, Hand or Power Actuated, Wire Termination, and Tool Kits, General Specification for.
MIL-I-81969 - Installing and Removal Tools, Connector Electrical Contact, General Specification for.
DOD-C-85045 - Cables, Fiber Optic, General Specification for (METRIC).

STANDARDS

FEDERAL

FED-STD-H28 - Screw Thread Standards for Federal Services.

MILITARY

MIL-STD-1373 - Screw Tnread, Modified 60°, Stub, Double.

(Copies of specifications, standards, drawings, and publications required by contractors in connection with specific acquisition functions should be obtained from the contracting activity or as directed by the contracting officer.)

3. DEFINITIONS

3.1 Hard metric. As related to design, hard metric means using standard metric dimensions and units as opposed to soft metric, which replaces english units and dimensions with their metric equivalent.

3.2 Blind mating. Mating of connectors and couplers under conditions that do not allow observation of the mating action.

4. GENERAL STATEMENTS OF REQUIREMENTS

4.1 NATO. Interface designs for hybrid and single fiber interconnectors shall be those which can be presented to the NATO Nations and be based where possible upon presently approved NATO interface designs.

4.2 Standards and specifications. International Specifications and Standards of the International Electrotechnical Commission (IEC) and the International Standards Organization (ISO) shall be used to the maximum extent possible. National Industry Standards shall take precedence over IEC and ISO documents. NATO documents shall take precedence over IEC, ISO and National Industry Standards. DoD documents shall take precedence over NATO documents. This precedence applies for the purposes of this standard.

5. DETAILED REQUIREMENTS

5.1 Interfaces. All connectors and termini of a new design shall be of hard metric. For general applications, the following requirements shall be used to the maximum extent possible.

5.1.1 Type I. Type I interfaces shall be class A or B as follows.

5.1.1.1 Class A. Type I, class A, series 1, 3, and 4 connectors shall use the interface designs in accordance with figures 1, 2, and 6 through 14.

5.1.1.2 Class B. Type I, class B, connector interface designs are to be determined.

5.1.2 Type II. Type II interfaces shall be class A or B as follows.

5.1.2.1 Class A. Type II, class A, series 2, connectors shall use the interface designs in accordance with figures 3, 3A, 4, and 5 (reference dimensions).

5.1.2.2 Class B. Type II, class B, connector interface designs are to be determined.

5.1.3 Type III. Type III interfaces shall be class A or B as follows.

5.1.3.1 Class A (style R). Type III, class A, style R, series 3 and 4 connectors shall use the interface designs in accordance with figures 6, 7, 9, 10, 12, and 14.

5.1.3.2 Class A (style S). Type III, class A, style S, series 1 connectors shall be in accordance with figures 1, 2, 8, 11, and 13.

5.1.3.3 Class B. Type III, class B connector interface designs are to be determined.

5.1.4 Rear interface. The rear of the interconnect shall be designed to accept cables and fibers conforming to DOD-C-85045. Types I and III, class A, series 1 connectors shall be in accordance with figure 11; series 3 and 4 connectors shall be in accordance with figure 12.

5.1.5 Rectangular connector. Type I and III, class A, series 5 connector interface designs are to be determined.

5.2 Backshell hardware. Backshell hardware shall be designed to provide a mechanism for terminating strength member fibers, if not provided by the connector, and to keep special tooling to a minimum.

5.3 Termini and contacts (types I and III). Termini and contacts shall be of the rear insertion design for ease of maintenance. Electrical contacts shall be crimpable and it is desirable that fiber optic termini be crimpable.

5.3.1 Termini interface designs (types I and III). Termini interface designs for series 1 shall be in accordance with figures 17 and 18; other termini interfaces are under consideration.

5.4 Tools. Special tool requirements shall be kept to a minimum. Tool kits shall be prepared for each connector type. The design shall allow for usage of MIL-I-81969 insertion and removal tools, and crimping tools per MIL-C-22520.

5.5 Marking. Besides other marking required by specifications, the words "Fiber Optic Connector" shall appear conspicuously on the outside surface, and a standard color shall be visible in the uncoupled state.

5.6 Scoopproof. For new design interconnects, connectors shall be scoopproof to prevent damage (For Types I & III only).

5.7 Polarization. All multichannel circular interconnects and their inserts shall be designed to prevent mismating. Connectors shall be designed to prevent physical contact of the mating optical termini, electrical contacts and insert interfaces, until the engagement of the polarizing mechanism is started.

5.8 Safety wires. Holes for use of .5 mm diameter safety wires shall be provided for circular interconnects; holes for rectangular interconnects are to be determined.

5.9 Engagement of connectors without selflocking coupling mechanism. Counterpart connectors of any arrangement and accessories shall be capable of being fully engaged and disengaged without the use of tools. Connectors shall have environment protective covers which will be used to protect them in the unmated condition.

5.10 Coupling mechanisms. Coupling rings on circular interconnects and coupling screws on non-circular interconnects shall be knurled, and designed so that plug and (if applicable) receptacle optical terminals approach or recede from each other as the coupling mechanism is respectively tightened by clockwise rotation or loosened in the counter-clockwise direction. The coupling mechanism shall be captive on the plug to mate with the receptacle or hermaphroditic plug shell. Coupling ring and coupling screw threads shall be in accordance with the metric threads of FED-STD-H28 and figures 15 and 16. If the coupling threads must be lubricated to meet the requirements contained herein, the lubricant shall be applied only during manufacture. The lubricant selected shall not be reapplied nor migrate into the optical junction(s) region during use.

5.11 Interchangeability and intermateability. Interconnect material and hardware shall be specified to insure interchangeability and intermateability.

5.11.1 Interchangeability. All interconnects, backshells, accessories and replaceable parts having the same part number shall be physically and functionally interchangeable without need for modification of such items or of the mating equipment.

5.11.2 Intermateability. All interconnects having the same terminal insert pattern and shell size shall be intermateable with their counterpart interconnects.

5.12 Insert patterns. Inserts shall be in accordance with the applicable military specification.

Custodians:
Army - CR
Navy - EC
Air Force - 85

Review activities:
Army - AR, MI
Navy - AS, OS
Air Force - 13, 11, 99

User activities:
Army - AV, AR
Navy - MC
Air Force - 14

Agent:
DLA - ES

Preparing activity:
Army - CR

(Project 6060-0019)

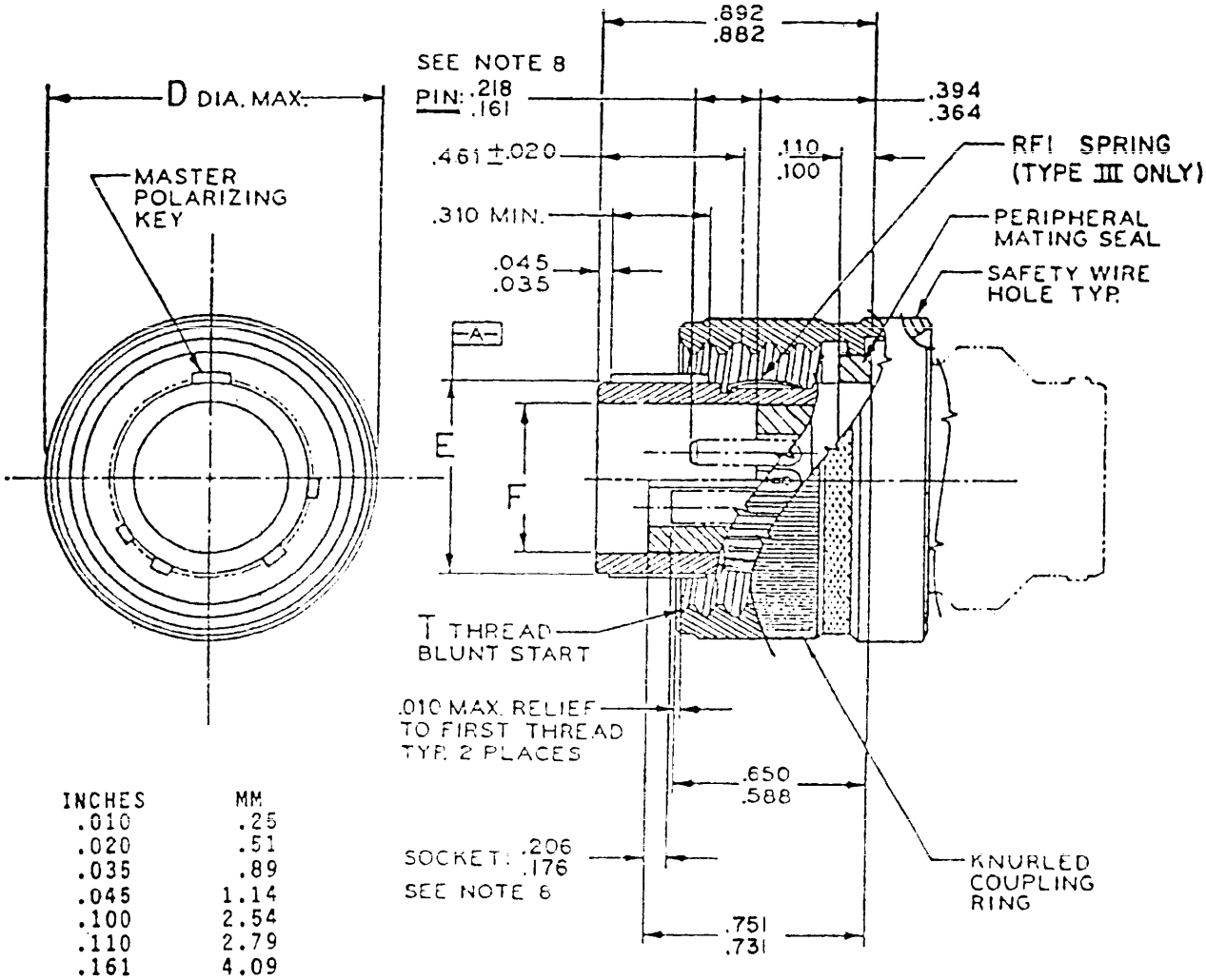

INCHES	MM
.010	.25
.020	.51
.035	.89
.045	1.14
.100	2.54
.110	2.79
.161	4.09
.176	4.47
.206	5.23
.218	5.54
.310	7.87
.364	9.25
.394	10.01
.461	11.71
.588	14.94
.650	16.51
.731	18.57
.751	19.08
.882	22.40
.892	22.66

FIGURE 1. Interface dimensions for fiber optic connector plug, series 1 - type I, class A and type III, class A, style S.

Shell sizes	T thread classes 2B	E DIA.	F DIA.	D DIA
(11)	.750-.1P-.2L-D.S	.502 (12.75) .492 (12.50)	.381 (9.68) .371 (9.42)	.954 (24.33) .934 (23.72)
(13)	.875-.1P-.2L-D.S.	.626 (15.90) .616 (15.65)	.503 (12.78) .493 (12.52)	1.079 (27.41) 1.059 (26.90)
(15)	1.062-.1P-.2L-D.S	.798 (20.27) .788 (20.02)	.681 (17.30) .671 (17.04)	1.267 (32.18) 1.247 (31.67)
(17)	1.125-.1P-.2L-D.S.	.868 (22.05) .858 (21.79)	.758 (19.25) .748 (19.00)	1.329 (33.76) 1.319 (33.50)
(19)	1.312-.1P-.2L-D.S.	1.035 (26.29) 1.025 (26.04)	.902 (22.91) .892 (22.66)	1.517 (38.53) 1.497 (38.02)
(23)	1.500-.1P-.2L-D.S.	1.220 (30.99) 1.210 (30.73)	1.087 (27.61) 1.077 (27.36)	1.704 (43.28) 1.684 (42.77)
(25)	1.625-.1P-.2L-D.S.	1.381 (35.08) 1.371 (34.82)	1.276 (32.41) 1.266 (32.16)	1.829 (46.46) 1.809 (45.95)
(29)	1.812-.1P-.2L-D.S.	1.547 (39.29) 1.537 (39.04)	1.427 (36.25) 1.417 (35.99)	2.032 (51.61) 2.012 (51.10)
(33)	2.000-.1P-.2L-D.S.	1.739 (44.17) 1.729 (43.92)	1.625 (41.28) 1.615 (41.02)	2.212 (56.18) 2.192 (55.68)

1. Dimensions are in inches.
2. Millimeters are in parentheses.
3. Metric equivalents (to the nearest .01 mm) are given for general information only and are based upon 1 inch = 25.4 mm.
4. Dimensions apply after plating.
5. Mating key positions and dimensions are shown on figure 8.
6. This design information establishes connector intermating criteria and interchangeability of accessory hardware.
7. Rear end connector design for attachment of non-rotatable accessory hardware is shown on figure 11.
8. Dimension includes terminal slack. (Pin front end moves back during mating.)

FIGURE 1. Interface dimensions for fiber optic connector plug, series 1 - type I, class A and type III, class A, style S - Continued.

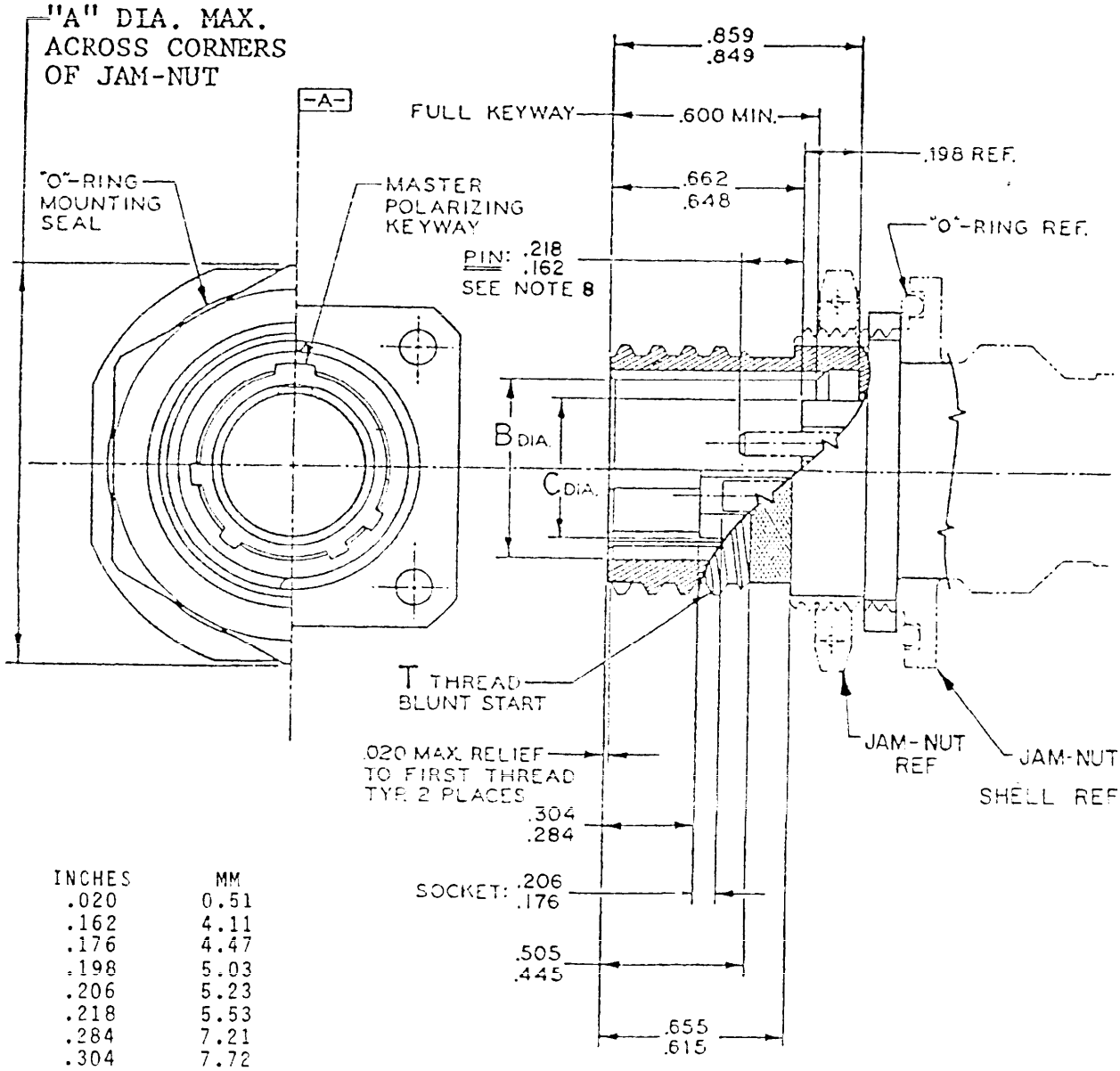

INCHES	MM
.020	0.51
.162	4.11
.176	4.47
.198	5.03
.206	5.23
.218	5.53
.284	7.21
.304	7.72
.445	11.30
.505	12.83
.600	15.24
.615	15.62
.648	16.46
.655	16.64
.662	16.81
.849	21.56
.859	21.82

FIGURE 2. Interface dimensions for fiber optic connector receptacle, series 1 - type I, class A and type III, class A, style S.

Shell sizes	T thread classes 2A	A DIA. MAX JAM-NUT	B DIA.	C DIA
(11)	.750-.1P-.2L-D.S	1.290 (32.77)	.513 (13.03) .504 (12.80)	.367 (9.32) .352 (8.94)
(13)	.875-.1P-.2L-D.S.	1.435 (36.45)	.637 (16.18) .628 (15.95)	.489 (12.42) .474 (12.04)
(15)	1.062-.1P-.2L-D.S	1.650 (41.91)	.809 (20.55) .800 (20.32)	.667 (16.94) .652 (16.56)
(17)	1.125-.1P-.2L-D.S.	1.725 (43.82)	.879 (22.33) .870 (22.10)	.744 (18.90) .729 (18.52)
(19)	1.312-.1P-.2L-D.S.	1.940 (49.28)	1.046 (26.57) 1.037 (26.34)	.888 (22.56) .873 (22.17)
(23)	1.500-.1P-.2L-D.S.	2.155 (54.74)	1.231 (31.27) 1.222 (31.04)	1.073 (27.25) 1.058 (26.87)
(25)	1.625-.1P-.2L-D.S.	2.300 (58.42)	1.392 (35.36) 1.383 (35.13)	1.262 (32.05) 1.247 (31.67)
(29)	1.812-.1P-.2L-D.S.	2.515 (63.88)	1.558 (39.57) 1.549 (39.34)	1.412 (35.86) 1.397 (35.48)
(33)	2.000-.1P-.2L-D.S.	2.730 (69.34)	1.750 (44.45) 1.741 (44.22)	1.610 (40.89) 1.595 (40.51)

NOTES:

1. Dimensions are in inches.
2. Millimeters are in parentheses.
3. Metric equivalents (to the nearest .01 mm) are given for general information only and are based upon 1 inch = 25.4 mm.
4. Dimensions apply after plating.
5. Mating keyway positions and dimensions are shown on figure 8.
6. This design information establishes connector intermating criteria and interchangeability of accessory hardware.
7. Rear end connector design for attachment of non-rotatable accessory hardware is shown on figure 11.
8. Dimension includes terminal slack. (Pin front end moves back during mating.)

FIGURE 2. Interface dimensions for fiber optic connector receptacle, series 1 - type I, class A and type III, class A, style S - Continued.

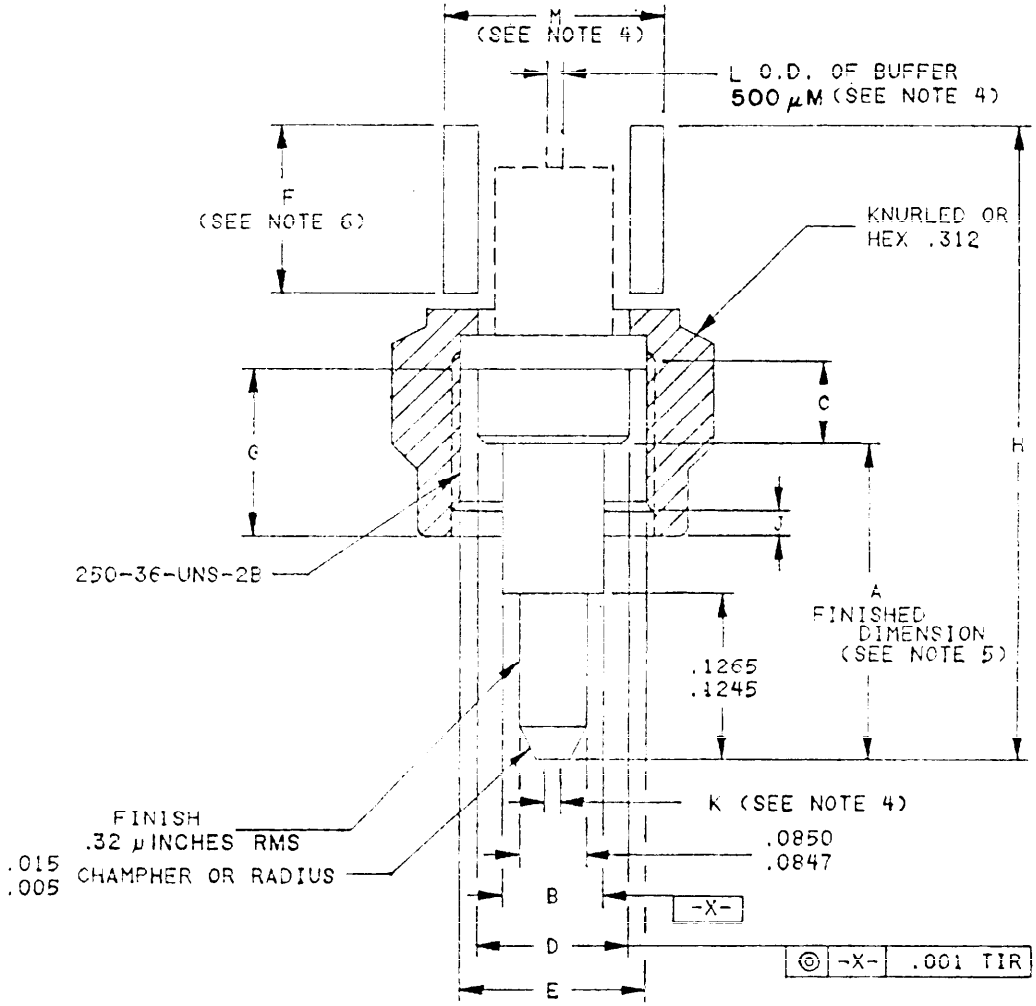

STEP-DOWN NOSE

FIGURE 3. Dimensions and configuration.

K Dimensions	
50/125 µm Fiber	100/140µm Fiber
.0050 +.0003 -.0000	.0057 +.0003 -.0000

	MIN	MAX
A	.3860 (9.804)	.3863 (9.812)
C	.080 (2.03)	.100 (2.54)
D	.180 (4.57)	.182 (4.62)
E	.220 (5.59)	.226 (5.74)
F	.485 (12.32)	
G	.183 (4.66)	.224 (5.70)
H		1.50 (38.10)
J	.015 (.38)	.045 (1.14)
M	.230 (5.48)	.235 (5.97)
B	Plug must not enter .1244 hole gage	Plug must enter .1250 dia hole gage with a max force of 12 lbs

NOTES:
1. Dimensions are in inches.
2. Metric equivalents are given for general information only.
3. Millimeters are in parentheses.
4. K, L and M dimensions for fiber optic cable shall be in accordance with DoD-C-85045.
5. Dimension A is obtained after product has been assembled.
6. Ferrule may be integral part of component.
7. One full length sleeve to be used in conjunction with two step-down nose connectors.
8. One half length sleeve to be used in conjunction with one step-down nose connector and one receptacle (active device).

FIGURE 3. Dimensions and configuration - Continued.

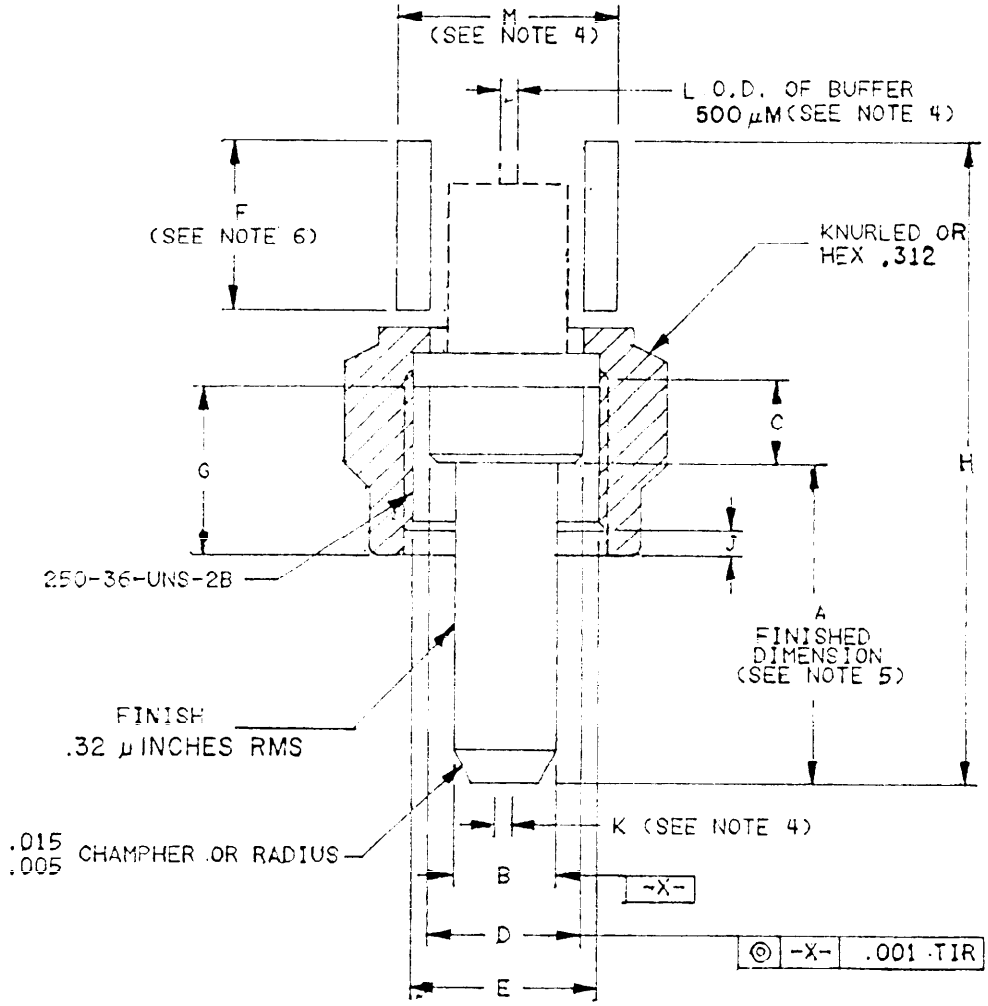

FIGURE 3. Dimensions and configuration - Continued.

K Dimensions	
50/125 µm Fiber	100/140µm Fiber
.0050 +.0003 -.0000	.0057 +.0003 -.0000

	MIN	MAX
A	.3860 (9.804)	.3863 (9.812)
C	.080 (2.03)	.100 (2.54)
D	.180 (4.57)	.182 (4.62)
E	.220 (5.59)	.226 (5.74)
F	.485 (12.32)	
G	.183 (4.66)	.224 (5.70)
H		1.50 (38.10)
J	.015 (.38)	.045 (1.14)
M	.230 (5.48)	.235 (5.97)
B	Plug must not enter .1244 hole gage	Plug must enter .1250 dia hole gage with a max force of 12 lbs

NOTES:
1. Dimensions are in inches.
2. Metric equivalents are given for general information only.
3. Millimeters are in parentheses.
4. K, L and M dimensions for fiber optic cable shall be in accordance with DoD-C-85045.
5. Dimension A is obtained after product has been assembled.
6. Ferrule may be integral part of component.

FIGURE 3. Dimensions and configuration - Continued.

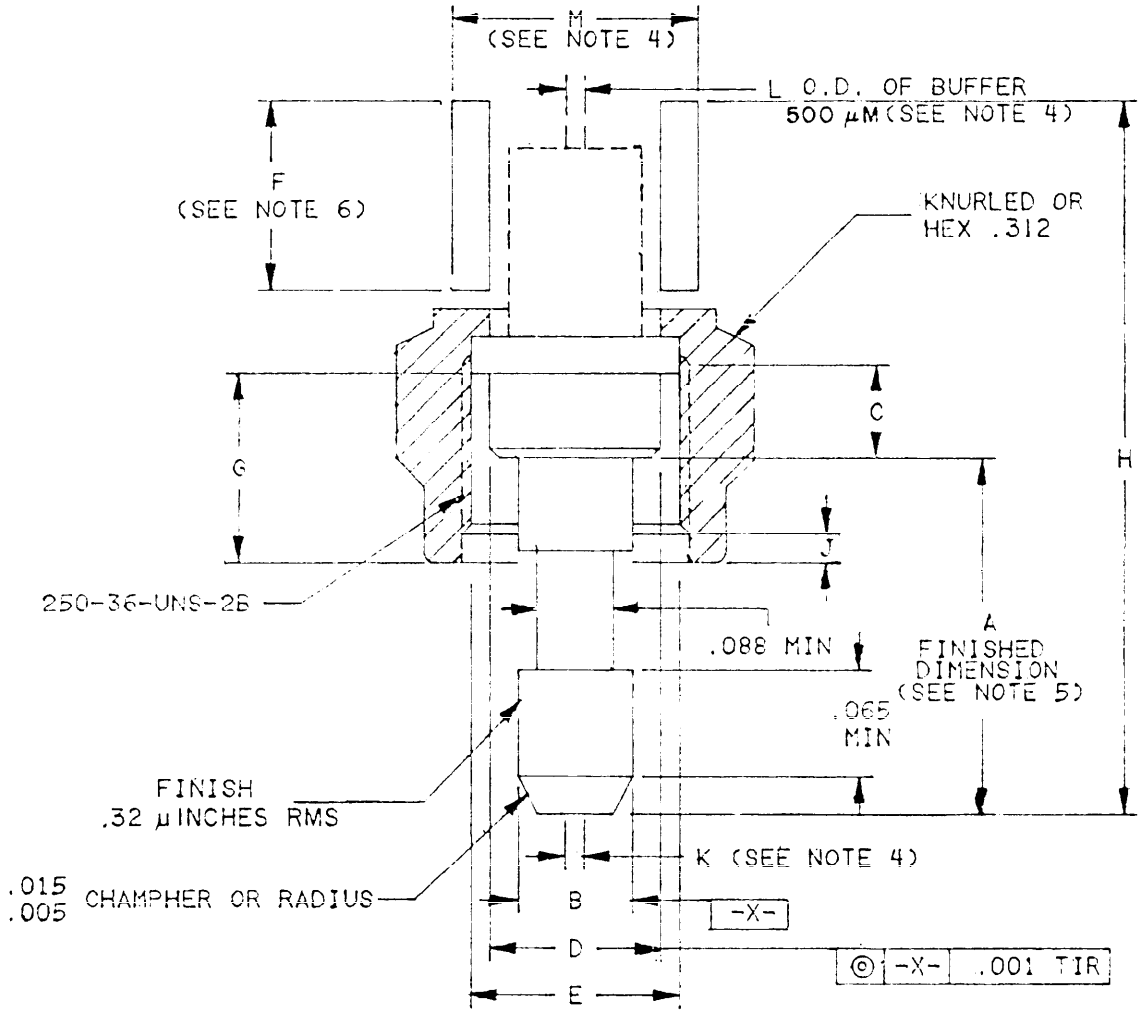

STRAIGHT NOSE (OPTIONAL VIEW)

FIGURE 3. Dimensions and configuration - Continued.

K Dimensions	
50/125 μm Fiber	100/140μm Fiber
.0050 +.0003 -.0000	.0057 +.0003 -.0000

	MIN	MAX
A	.3860 (9.804)	.3863 (9.812)
C	.080 (2.03)	.100 (2.54)
D	.180 (4.57)	.182 (4.62)
E	.220 (5.59)	.226 (5.74)
F	.485 (12.32)	
G	.183 (4.66)	.224 (5.70)
H		1.50 (38.10)
J	.015 (.38)	.045 (1.14)
M	.230 (5.48)	.235 (5.97)
B	Plug must not enter .1244 hole gage	Plug must enter .1250 dia hole gage with a max force of 12 lbs

NOTES:
1. Dimensions are in inches.
2. Metric equivalents are given for general information only.
3. Millimeters are in parentheses.
4. K, L and M dimensions for fiber optic cable shall be in accordance with DoD-C-85045.
5. Dimension A is obtained after product has been assembled.
6. Ferrule may be integral part of component.

FIGURE 3. Dimensions and configuration - Continued.

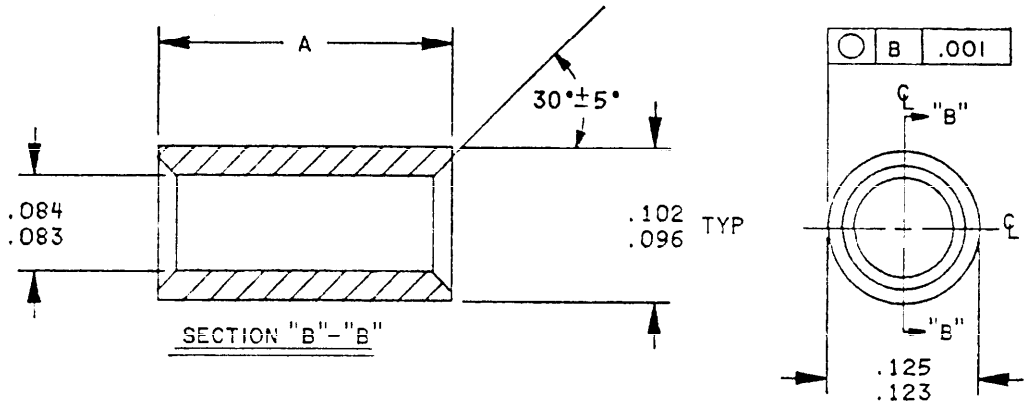

	A	
	MIN	MAX
Full sleeve (see note 4)	.242 (6.15)	.246 (6.25)
1/2 Sleeve (see note 5)	.121 (3.07)	.123 (3.12)

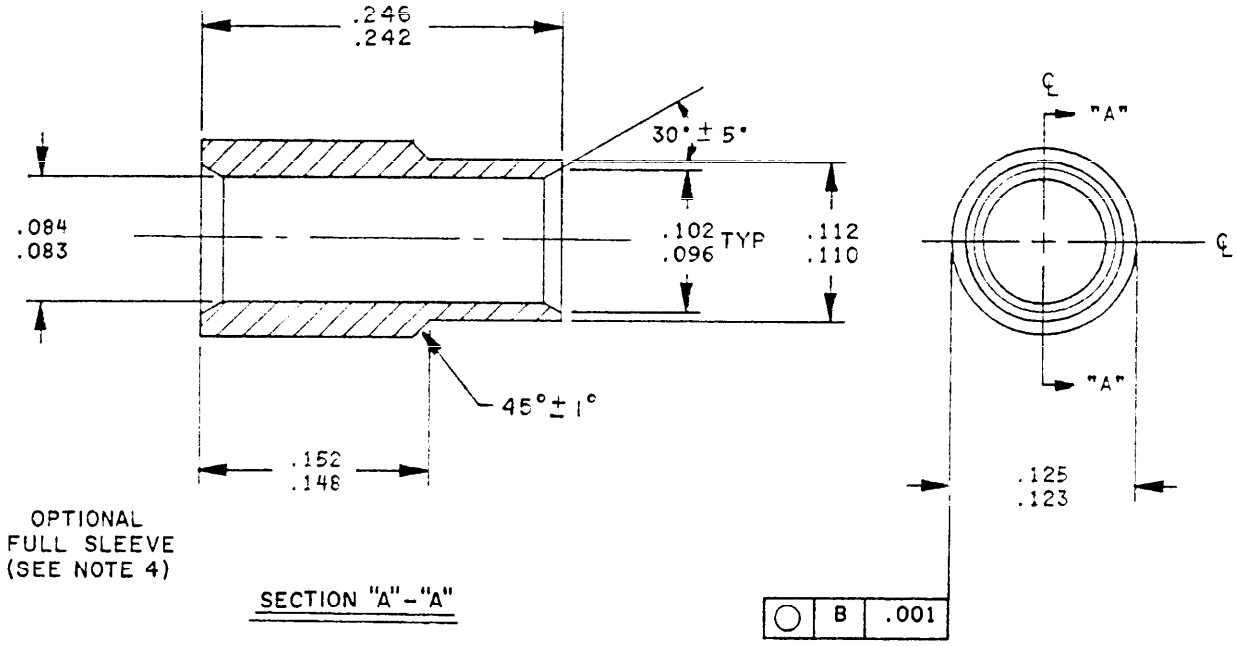

FIGURE 3A. Alignment sleeves.

INCHES	MM	INCHES	MM
.083	2.11	.123	3.12
.084	2.13	.125	3.18
.096	2.44	.148	3.76
.102	2.59	.152	3.86
.110	2.79	.242	6.15
.112	2.84	.296	7.52

NOTES:
1. Dimensions are in inches.
2. Metric equivalents are in parentheses.
3. Metric equivalents are given for general information only.
4. One full length delrin sleeve to be used in conjunction with two step-down nose connectors.
5. One half length delrin sleeve to be used in conjunction with one step-down nose connector and one receptacle (active device).

FIGURE 3A. Alignment sleeves - Continued.

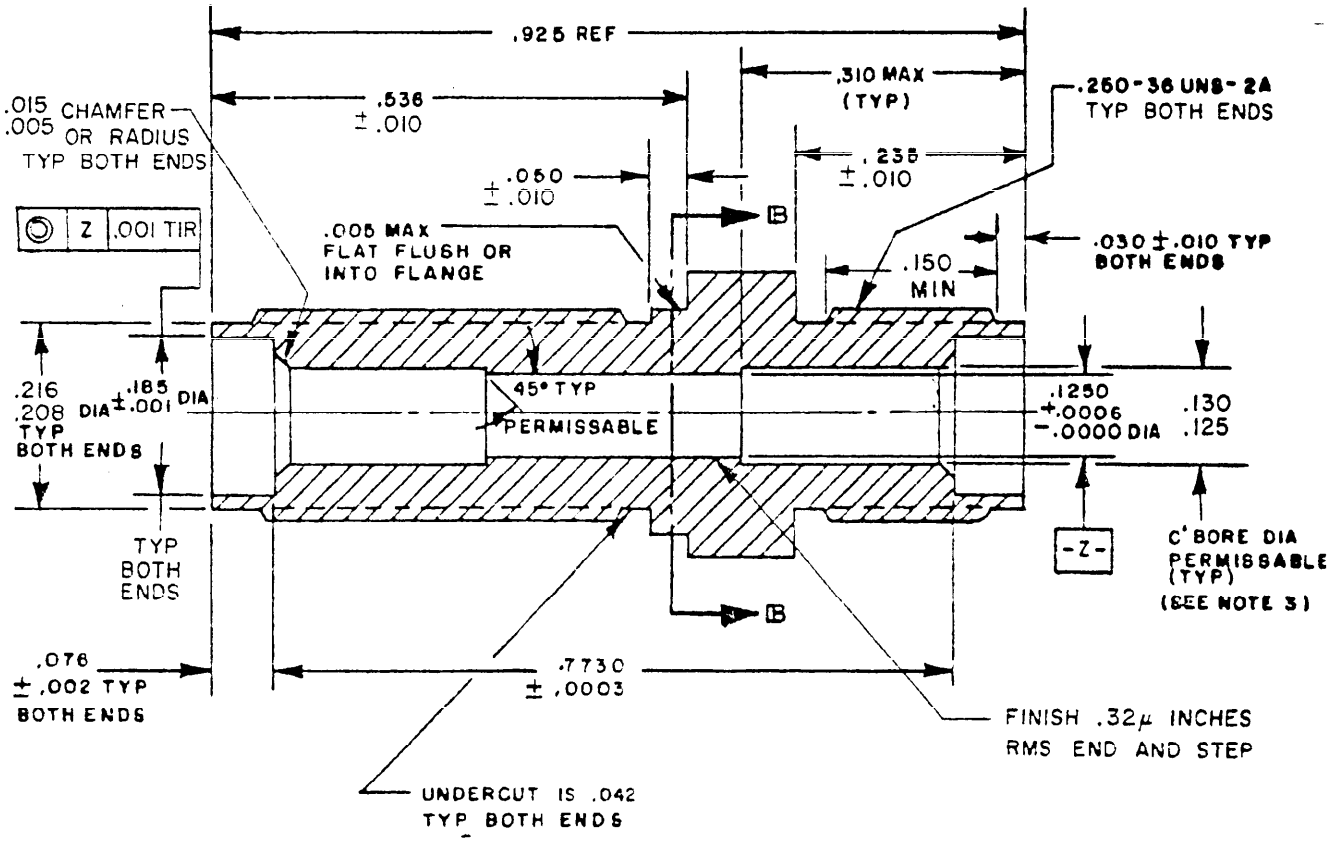

SECTION A A

INCHES	MM	INCHES	MM
.0000	0.000	.1250	3.175
.000	0.00	.125	3.18
.0003	0.008	.130	3.30
.001	0.03	.160	4.06
.002	0.05	.185	4.70
.005	0.08	.208	5.28
.010	0.25	.216	5.49
.015	0.38	.235	5.97
.030	0.76	.250	6.35
.042	1.07	.310	7.87
.050	1.27	.536	13.61
.076	1.93	.7730	19.634
		.925	23.50

NOTES:
1. Dimensions are in inches.
2. Metric equivalents are given for general information only.
3. All dimensions are after plating.
4. No burrs or nicks for entire length.

FIGURE 4. Interface dimensions for fiber optic mating adaptor, type II, class A, series 2.

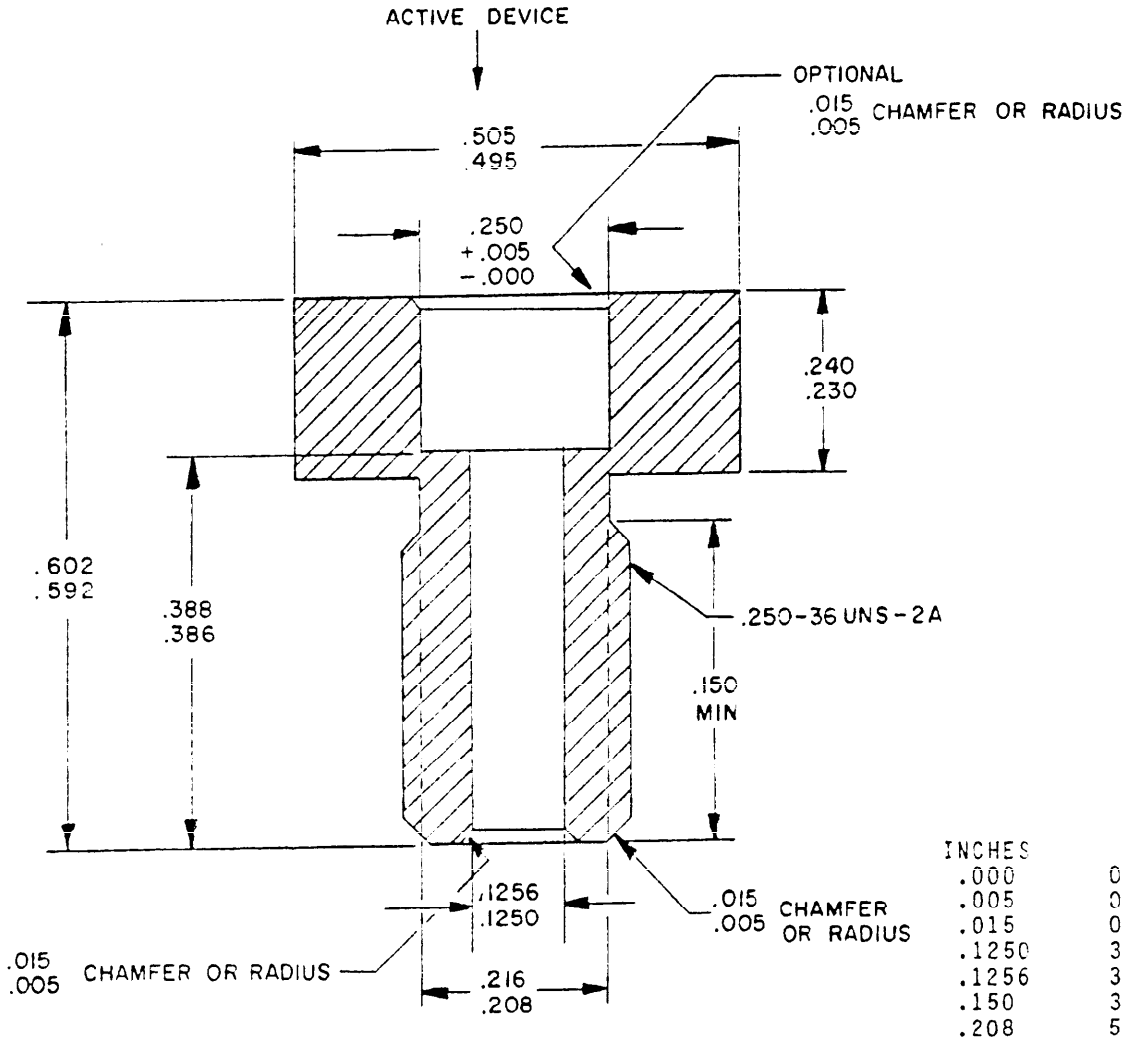

INCHES	MM
.000	0.00
.005	0.13
.015	0.38
.1250	3.175
.1256	3.190
.150	3.81
.208	5.28
.216	5.49
.230	5.84
.240	6.10
.250	6.35
.386	9.80
.388	9.86
.495	12.57
.502	12.75
.505	12.83
.602	15.29

NOTES:
1. Dimensions are in inches.
2. Metric equivalents are given for general information only.

FIGURE 5. Interface dimensions for fiber optic connector receptacle (active device), type II, class A, series 2.

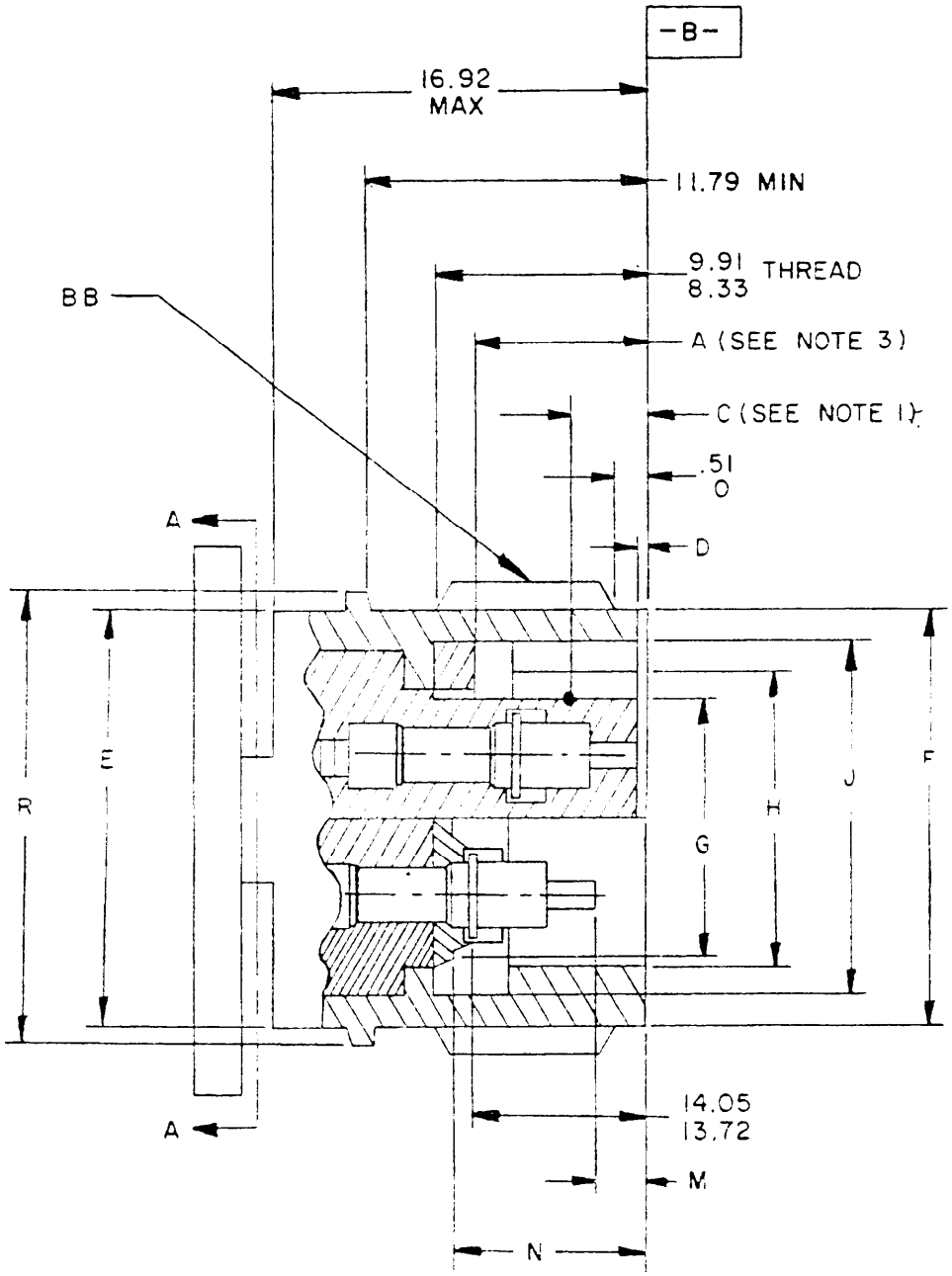

FIGURE 6. Intermateability dimensions for fiber optic interconnect, series 3 - type I, class A and type III, class A, style R.

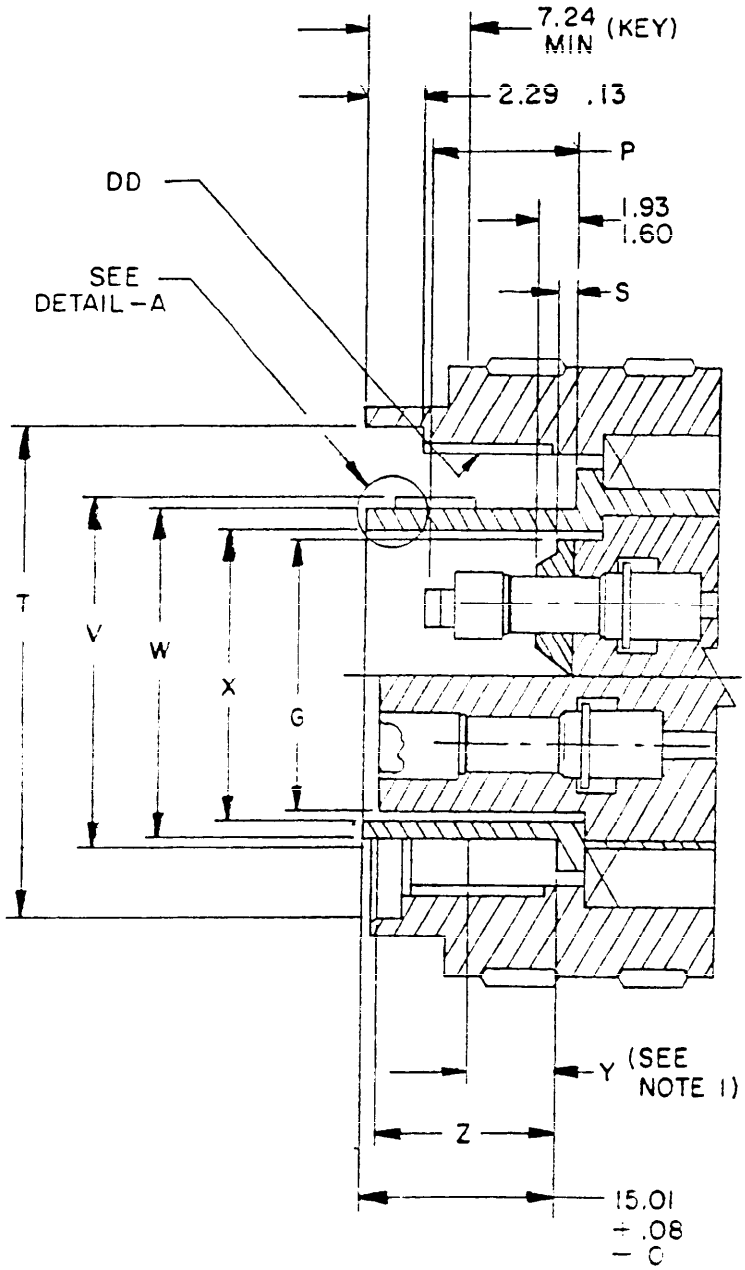

PLUG

FIGURE 6. Intermateability dimensions for fiber optic interconnect, series 3 - type I, class A and type III, class A, style R - Continued.

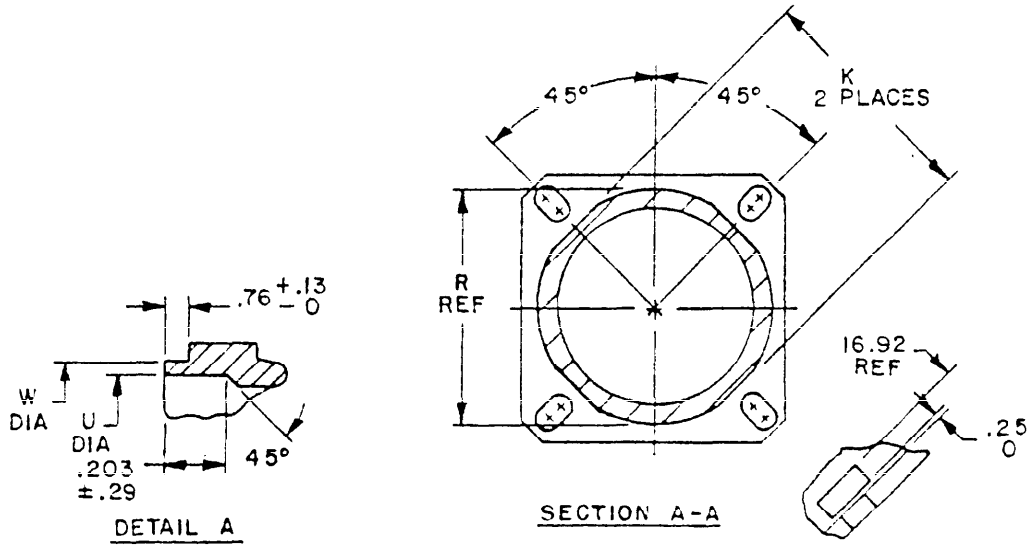

NOTES:

1. A point at which a gage pin, having the same basic diameter as the mating contact and a square face, touches socket contact spring (type III only).
2. Details "A" and "B" apply to both plugs and receptacles.
3. "A" initial contact with static seal.
4. Insert front surface shall be flat within .13 T.I.R.
5. Diameters H and G shall be concentric within .13 T.I.R. at MMC.
6. Diameter W with respect to diameter V shall be concentric at MMC.
7. Dimensions are in millimeters (except coupling threads).
8. K dimension is for clearance of mounting screw heads.
9. Thread approach modified to eliminate cross-threading.
10. Receptacle coupling threads may have modified minor diameters.

FIGURE 6. Intermateability dimensions for fiber optic interconnect, series 3 - type I, class A and type III, class A, style R - Continued.

Shell Size	A GASK LOC	C SEE NOTE 1	D SOC INS LOC	E DIA MAX	F DIA	G DIA ±.13	H DIA	J DIA	K MAX	M PIN CONT LOC	N PIN INS LOC	P PIN CONT LOC	R DIA MAX
9	14.73 14.50	3.25 Max	0.87 0.71	14.55	14.42 14.14	7.24	11.36 11.20	12.63 12.34	11.84	10.54 9.50	15.37 15.04	6.15 6.11	15.88
11				17.73	17.60 17.32	10.49	14.61 14.45	15.88 15.60	15.01				19.05
13				20.90	20.77 20.49	13.39	17.45 17.30	19.66 19.38	19.08				22.23
15				24.08	23.95 23.67	16.56	20.63 20.44	22.84 22.56	22.25				25.40
17				28.52	28.30 27.97	19.74	23.80 23.64	26.01 25.73	25.43				30.16
19				30.12	29.89 29.56	22.00	26.47 26.31	28.63 28.40	28.60				31.75
21				33.30	33.07 32.74	25.17	29.64 29.49	31.85 31.57	31.78				34.73
23				36.47	36.24 35.91	28.35	32.82 32.66	35.03 34.75	34.95				38.10
25	14.73 14.50	3.25 Max	0.87 0.71	39.65	39.22 39.09	31.52	35.99 35.84	38.20 37.92	38.13	10.54 9.50	15.37 15.04	6.15 5.11	41.28

FIGURE 6. Intermateability dimensions for fiber optic interconnect, series 3 - type I, class A and type III, class A, style R - Continued.

Shell Size	S PIN INS LOC	T DIA +.25 -.03	U DIA +.13 -.03	V DIA	W DIA	X DIA ±.13	Y SEE NOTE 1	Z SOC INS LOC
9	0.61 0.28	16.51	9.83	12.27 11.99	11.13 10.97	8.00	12.45 Min	14.94 14.78
11		19.69	13.06	15.52 15.24	14.38 14.22	11.00		
13		22.86	15.95	19.31 19.02	17.22 17.07	13.89		
15		26.04	19.13	22.48 22.20	20.40 20.24	17.07		
17		30.89	22.30	25.66 25.37	23.57 23.42	20.24		
19		32.49	24.69	28.32 28.04	26.24 26.09	22.50		
21		35.66	27.86	31.50 31.22	29.42 29.26	25.68		
23		38.84	31.04	34.67 34.39	32.59 32.44	28.85		
25	0.61 0.28	42.01	34.21	37.85 37.57	35.77 35.61	32.00	12.45 Min	14.94 14.78

FIGURE 6. Intermateability dimensions for fiber optic interconnect, series 3 - type I, class A and type III, class A, style R - Continued.

BB THREAD (PLATED)												
Shell Size	DESIGNATION				EXTERNAL THREAD - LIMITS OF SIZE - CLASS 2A							
	THREAD SIZE	PITCH	LEAD	ALLOW-ANCE 1/	MAJOR DIAMETER LIMITS		TOLER-ANCE	PITCH DIAMETER LIMITS		TOLER-ANCE	MINOR DIAMETER LIMITS	
					MAX.	MIN.		MAX.	MIN.		MAX.	MIN.
9	.6250	.1	.3	.0015	.6235	.6155	.0080	.5975	.5895	.0080	.5675	.5535
11	.7500	.1	.3	.0051	.7485	.7405	.0080	.7225	.7145	.0080	.6925	.6785
13	.8750	.1	.3	.0015	.8735	.8655	.0080	.8475	.8395	.0080	.8175	.8035
15	1.0000	.1	.3	.0015	.9985	.9905	.0080	.9725	.9645	.0080	.9425	.9285
17	1.1875	.1	.3	.0020	1.1855	1.1735	.0120	1.1515	1.1415	.0100	1.1135	1.0955
19	1.2500	.1	.3	.0020	1.2480	1.2360	.0120	1.2140	1.2040	.0100	1.1760	1.1580
21	1.3750	.1	.3	.0020	1.3730	1.3610	.0120	1.3390	1.3290	.0100	1.3010	1.2830
23	1.5000	.1	.3	.0020	1.4980	1.4860	.0120	1.4640	1.4540	.0100	1.4260	1.4080
25	1.6250	.1	.3	.0020	1.6230	1.6110	.0120	1.5890	1.5790	.0100	1.5510	1.5330

1/ Gages for plated threads: Maximum gaging limits of class 2A threads which are plated, are increased by the allowance.

DD THREAD (PLATED)											
Shell Size	DESIGNATION			INTERNAL THREAD - LIMITS OF SIZE - CLASS 2B							
	THREAD SIZE	PITCH	LEAD	MINOR DIAMETER LIMITS		TOLER-ANCE	PITCH DIAMETER LIMITS		TOLER-ANCE	MAJOR DIAMETER LIMITS	
				MIN.	MAX.		MIN.	MAX		MIN.	MAX.
9	.6250	.1	.3	.5792	.5892	.0100	.5990	.6090	.0100	.6290	.6450
11	.7500	.1	.3	.7042	.7142	.0100	.7240	.7340	.0100	.7540	.7700
13	.8750	.1	.3	.8292	.8392	.0100	.8490	.8590	.0100	.8790	.8950
15	1.0000	.1	.3	.9542	.9642	.0100	.9740	.9840	.0100	1.0040	1.0200
17	1.1875	.1	.3	1.1274	1.1394	.0120	1.1535	1.1655	.0120	1.1915	1.2115
19	1.2500	.1	.3	1.1900	1.2020	.0120	1.2160	1.2280	.0120	1.2540	1.2740
21	1.3750	.1	.3	1.3150	1.3270	.0120	1.3410	1.3530	.0120	1.3790	1.3990
23	1.5000	.1	.3	1.4400	1.4520	.0120	1.4660	1.4780	.0120	1.5040	1.5240
25	1.6250	.1	.3	1.5650	1.5770	.0120	1.5910	1.6030	.0120	1.6290	1.6490

FIGURE 6. Intermateability dimensions for fiber optic interconnect, series 3 - type I, class A and type III, class A, style R - Continued.

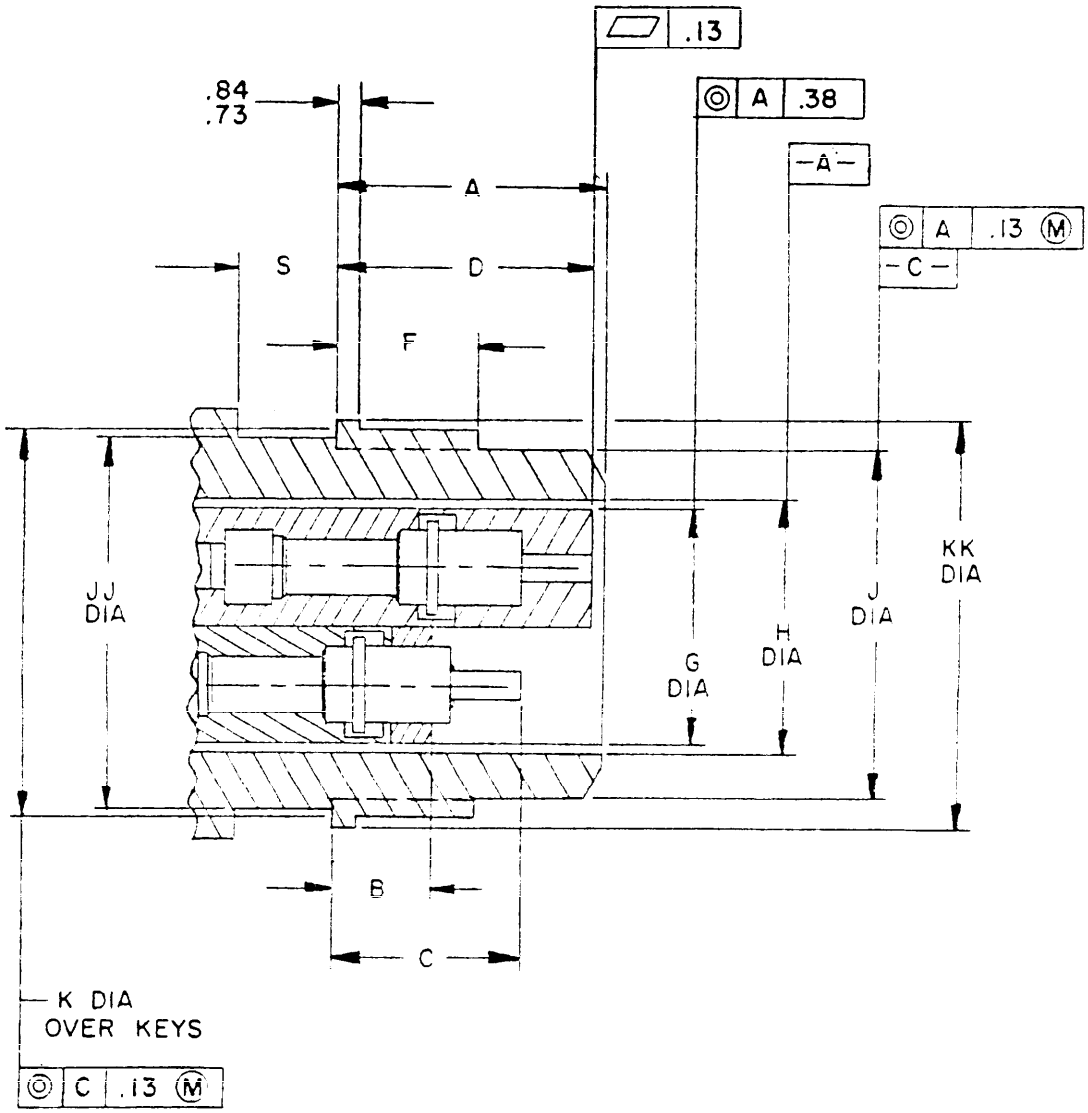

FIGURE 7. Intermateability dimensions for fiber optic interconnect, series 4 - type I, class A and type III, class A, style R.

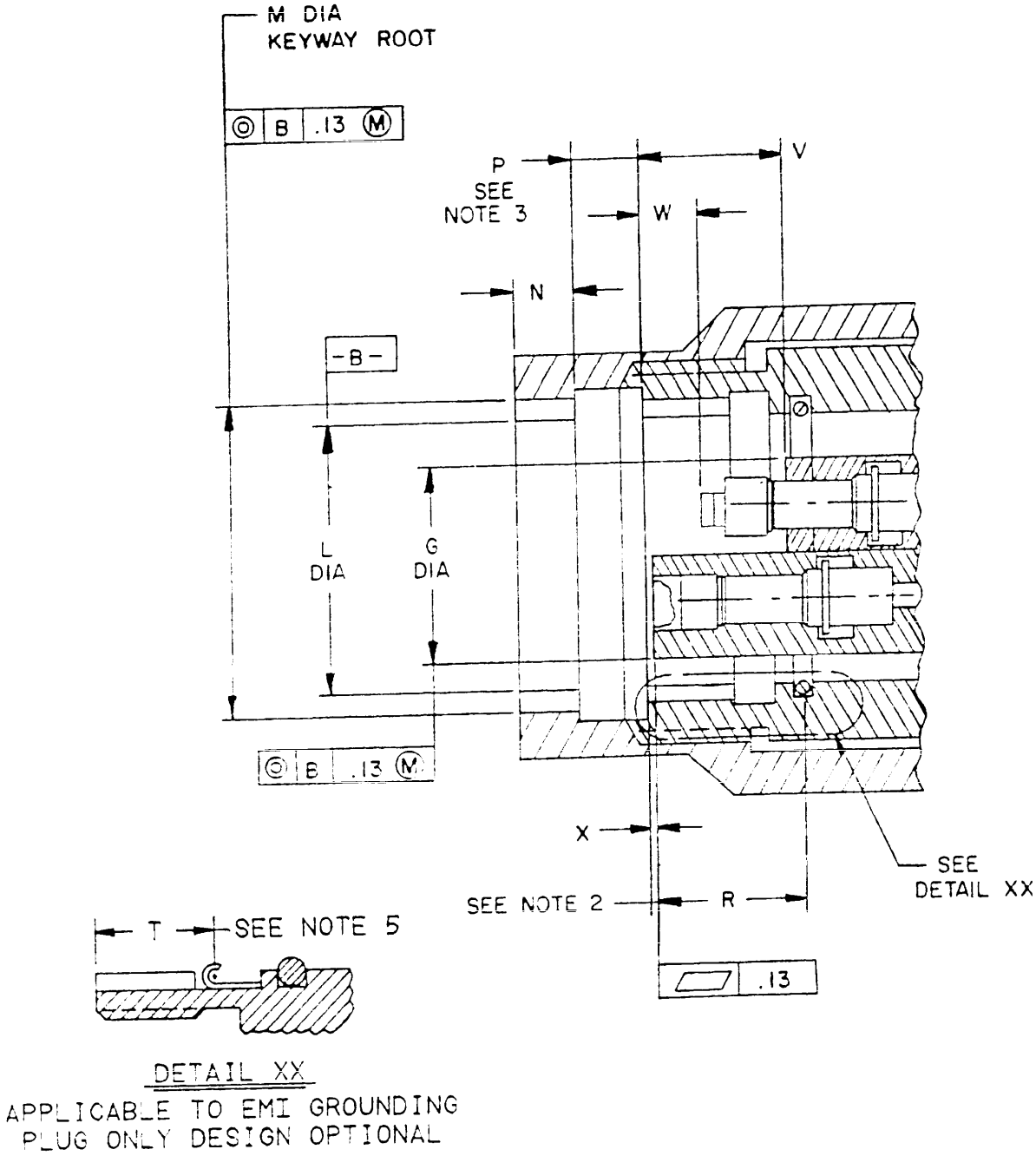

NOTES:
1. Dimensions are in millimeters.
2. Details apply to both plug and receptacle.
3. Initial contact with static seal.
4. Unmated dimension.
5. A point at which a gage, having the same basic diameter as the matching receptacle shell, and a square face, touches the RFI spring.
6. Sealing/Grounding surface.
7. For dimensions K, KK, L and M, see main key-keyway polarization figure (figure 10).

FIGURE 7. Intermateability dimensions for fiber optic interconnect, series 4-type I, class A and type III, class A, style R - Continued.

Shell size	A	RECEPTACLE B PIN INSR LOC	C PIN CONT LOC	D SKT INSR LOC	F	G DIA	H DIA MIN	J DIA	N	P MIN	R MAX	S	T MAX
11						10.62 10.36	10.74	12.93 12.77					
13	17.15 16.99	2.08 1.71	7.09 6.12	16.03 15.81	7.02 6.85	13.52 13.25	13.63	16.10 15.94	2.37 2.26	4.08		2.52 2.38	
15						16.69 16.43	16.91	19.28 19.21					
17						19.87 19.60	19.98	22.48 22.32			13.34		9.40
19						22.13 21.86	22.25	25.63 25.47					
21	16.90 16.73	1.85 1.46	6.84 5.86	15.78 15.55	6.76 6.60	25.30 25.04	25.42	28.80 28.64	2.62 2.51	3.83		2.77 2.64	
23						28.45 28.21	28.60	31.98 31.82					
25						31.65 31.39	31.77	35.15 34.99					

FIGURE 7. Intermateability dimensions for fiber optic interconnect, series 4 - type I, class A and type III, class A, style R - Continued

Plug				
Shell size	V PIN INSR LOC	W PIN CONT LOC	X SKT INSR LOC	JJ DIA
11	15.14 14.73	10.72 9.70	1.05 0.76	13.09 12.99
13				16.52 16.42
15				19.70 19.60
17				22.90 22.80
19				25.79 25.69
21				28.97 28.87
23				32.14 32.04
25				35.32 35.22

FIGURE 7. Intermateability dimensions for fiber optic interconnect, series 4 - type I, class A and type III, class A, style R - Continued.

5.1.1 Type I. Type I interfaces shall be class A or B as follows:

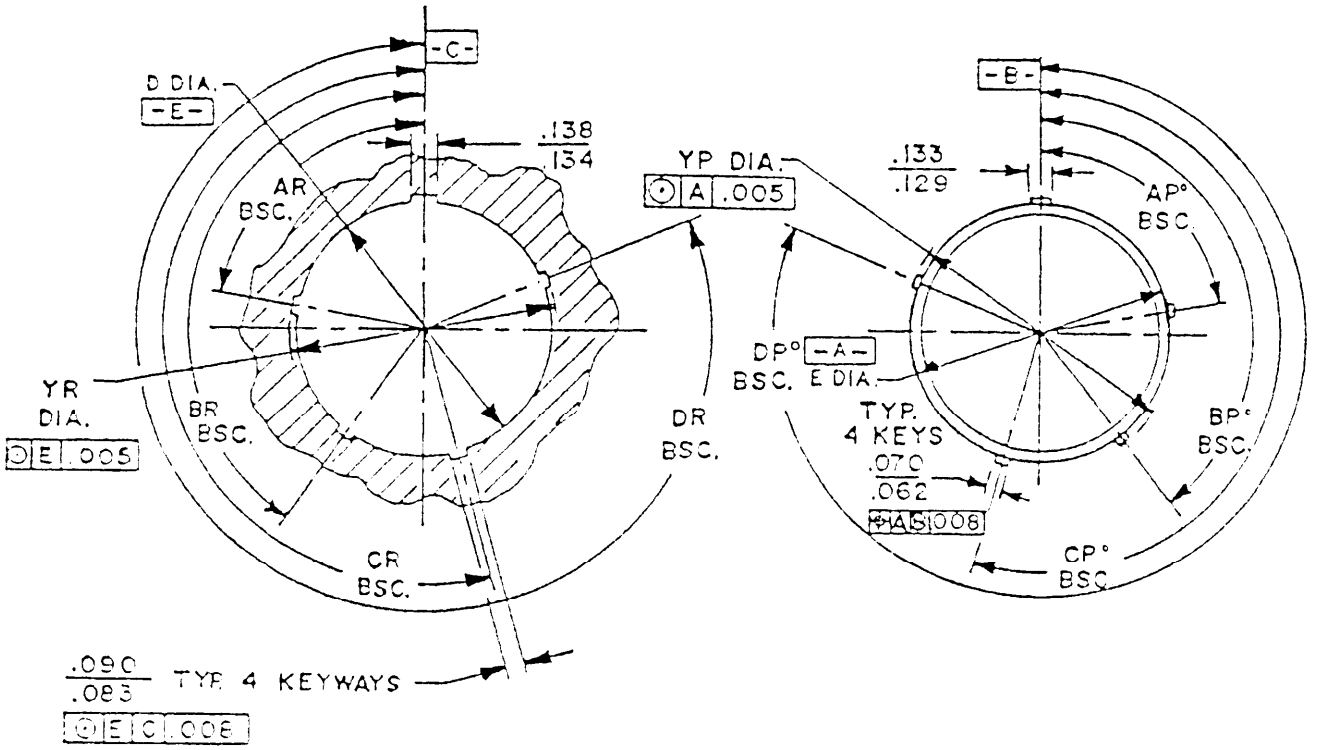

INCHES	MILLIMETERS
.005	0.13
.008	0.20
.062	1.67
.070	1.78
.083	2.11
.090	2.29
.129	3.25
.133	3.38
.134	3.40
.138	3.60

FIGURE 8. Mating position key and keyways for fiber optic connector, series 1 - type I, class A and type III, class A, style S.

Designator 1/	Key & keyway arrange-ment	AR* or AP* BSC	BR* or BP* BSC	CR* or CP* BSC	DR* or DP* BSC	YP DIA.	YR DIA.
(11)	1	95	141	208	236	.559 (14.20)	.581 (14.76)
	2	113	156	182	292	.551 (14.00)	.569 (14.45)
	3	90	145	195	252		
(13)	4	53	156	220	255	.683 (17.35)	.705 (17.91)
	5	119	146	176	298	.675 (17.14)	.693 (17.60)
	6	51	141	184	242		
(15) and (17)	1	80	142	196	293	.855 (21.72)	.877 (22.28)
	2	135	170	200	310	.847 (21.51)	.865 (21.97)
	3	49	169	200	244		
	4	66	140	200	257	.925 (23.50)	.947 (24.05)
	5	62	145	180	280	.917 (23.29)	.935 (23.75)
	6	79	153	197	272		
(19)	1	80	142	196	293	1.092 (27.74) 1.084 (27.53)	1.114 (28.30) 1.102 (27.99)
(23)	2	135	170	200	310	1.277 (32.44) 1.269 (32.23	1.299 (32.99) 1.287 (32.69)
(25)	3	49	169	200	244	1.438 (36.52) 1.430 (36.32)	1.460 (37.08) 1.448 (36.78)
(29)	4	66	140	200	257	1.604 (40.74) 1.596 (40.54)	1.626 (41.30) 1.614 (41.00)
&	5	62	145	180	280	1.796 (45.62) 1.788 (45.42)	1.818 (46.18) 1.806 (45.87)
(33)	6	79	153	197	272		

NOTES:
1. Dimensions are in inches.
2. Millimeters are in parentheses.
3. Metric equivalents are given for general information only and are based upon 1 inch = 25.4 mm.
4. Dimensions apply after plating.
5. For datum of shell sizes 11 and 19, refer to figures 1 and 2 respectively.

FIGURE 8. Mating position key and keyways for fiber optic connector, series 1 - type I, class A and type III, class A, style S - Continued.

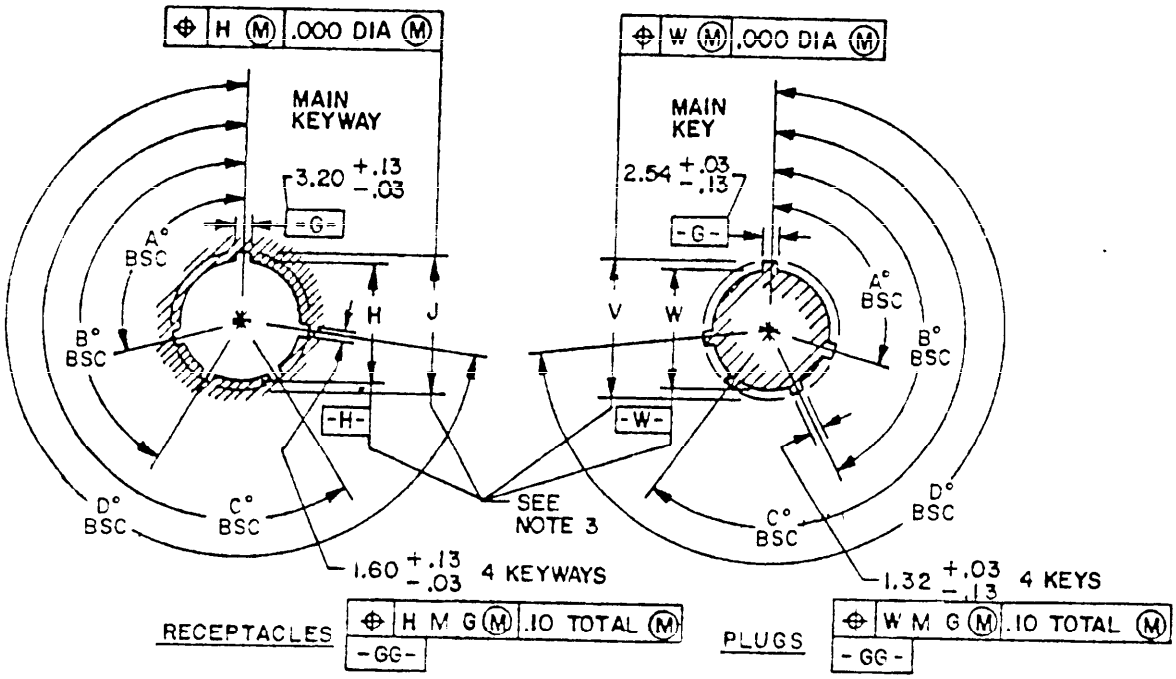

Shell Size	Key & keyway arrangement identification letter	A° BSC	B° BSC	C° BSC	D° BSC
9	N	105	140	215	265
	A	102	132	248	320
	B	80	118	230	312
	C	35	140	205	275
	D	64	155	234	304
	E	91	131	197	240
11, 13, and 15	N	95	141	208	236
	A	113	156	182	292
	B	90	145	195	252
	C	53	156	220	255
	D	119	146	176	298
	E	51	141	184	242
17 thru 25	N	80	142	196	293
	A	135	170	200	310
	B	49	169	200	244
	C	66	140	200	257
	D	62	145	183	280
	E	79	153	192	272

NOTES:
1. All angles are BSC.
2. The insert arrangement does not rotate with main key/keyway.
3. Dimensions are in millimeters.

FIGURE 9. Intermateability dimensions for main key/keyway polarization for fiber optic interconnect, series 3 - type I, class A and type III, class A, style R.

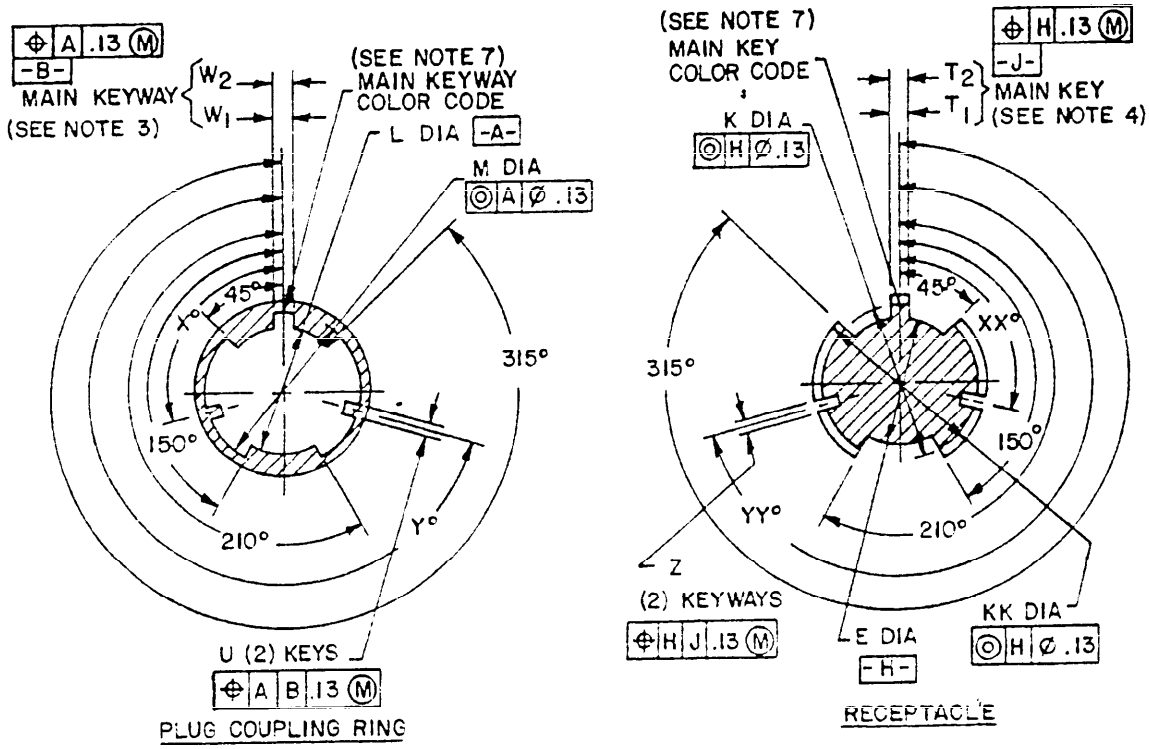

Shell Size	E DIA	K DIA	KK DIA	L DIA	M DIA	U MAX	Z MIN	MAIN KEY (RECEPTACLE) SKT CONT T1	MAIN KEY (RECEPTACLE) PIN CONT T2	MAIN KEYWAY (PLUG) PIN CONT W1	MAIN KEYWAY (PLUG) SKT CONT W2
11	13.09 12.95	14.99 14.90	16.26 16.17	13.19 13.10	16.41 16.28	1.38	1.52	1.66 1.52	2.67 2.54	1.73 1.62	2.82 2.71
13	16.51 16.38	18.32 18.23	19.33 19.25	16.62 16.53	19.49 19.35						
15	19.69 19.55	21.47 21.38	22.48 22.40	19.79 19.71	22.64 22.50	1.88	2.03	2.16 2.03	3.18 3.04	2.24 2.13	3.31 3.20
17	22.89 22.75	24.64 24.56	25.66 25.57	22.99 22.91	25.81 25.67						
19	25.79 25.65	27.67 27.58		25.89 25.80	27.84 27.71	2.39	2.54	2.67 2.54	3.69 3.55	2.98 2.87	3.99 3.88
21	28.96 28.82	30.84 30.75		29.06 28.98	31.02 30.88						
23	32.14 32.00	34.12 34.03		32.24 32.15	34.29 34.16	2.90	3.04	3.18 3.04	4.20 4.06	3.48 3.37	4.50 4.39
25	35.31 35.17	37.34 37.26		35.41 35.33	37.52 37.38						

FIGURE 10. Intermateability dimensions for main key/keyway polarization for fiber optic interconnect, series 4 - type I, class A and type III, class A, style R.

KEY AND KEYWAY ARRANGEMENT	X° XX°	Y° YY°
N	110°	250°
A	100°	260°
B	90°	270°
C	80°	280°
D	70°	290°

NOTES:
1. All angles are basic and | ⊕ | B | J | .25 |
2. Key and keyway arrangements apply to all shell sizes.
3. Main key dimensions T_1 and T_2 apply at K diameter.
4. Main keyway dimensions W_1 and W_2 apply at M diameter.
5. Key width U applies at L diameter.
6. Keyway width Z applies at E diameter.
7. Main key or keyway color code.
8. Angular dimensions 45°, 150°, 210° and 315° apply at M diameter for coupling ring and at E diameter for receptacle.
9. Dimensions are in millimeters.

FIGURE 10. Intermateability dimensions for main key/keyway polarization for fiber optic interconnect, series 4 - type I, class A and type III, class A, style R - Continued.

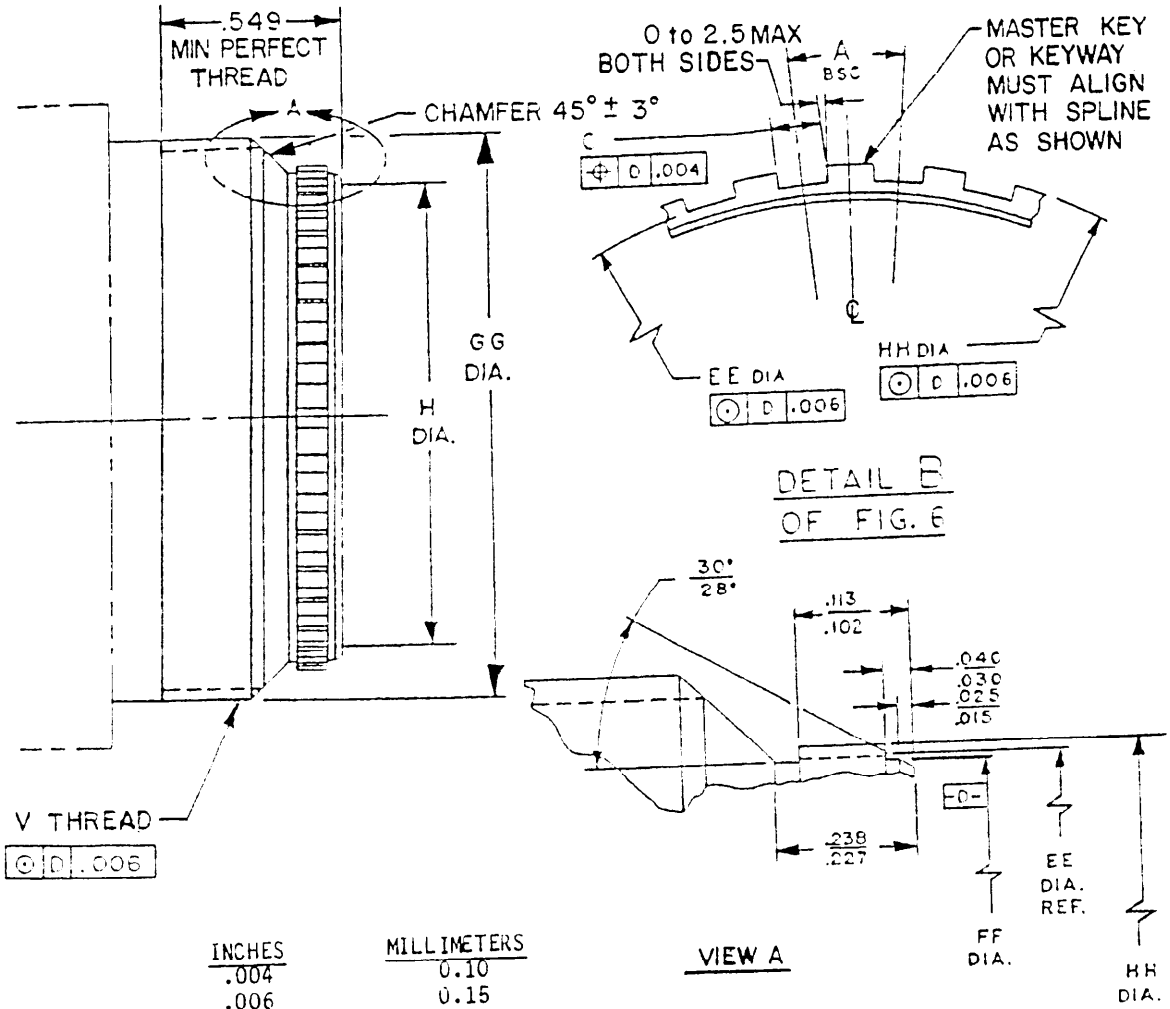

INCHES	MILLIMETERS
.004	0.10
.006	0.15
.015	0.38
.025	0.64
.030	0.76
.040	1.02
.102	2.59
.113	2.87
.227	5.76
.238	6.04
.549	13.94

FIGURE 11. Back-end configuration for fiber optic connector, series 1 - type I, class A and type III, class A, style S.

Shell sizes	A BSC	C	H DIA. MAX. GROMMET	V THREAD CLASS 2A	EE DIA.	FF DIA.	GG DIA. MAX	HH DIA.
(11)	20°	.0515 (1.31) .0465 (1.18)	.447 (11.35)	3/4 - 20 UNEF	.549 (13.94) .543 (13.79)	.540 (13.72) .534 (13.56)	.755 (19.18)	.573 (14.55) .567 (14.40)
(13)	20°	.0615 (1.56) .0565 (1.44)	.582 (14.78)	7/8 - 20 UNEF	.664 (16.87) .658 (16.71)	.655 (16.64) .649 (16.48)	.880 (22.35)	.688 (17.48) .682 (17.32)
(15)	18°	.0660 (1.68) .0610 (1.55)	.727 (18.47)	1 - 20 UNEF	.799 (20.29) .793 (20.14)	.790 (20.07) .784 (19.91)	1.005 (25.53)	.823 (20.90) .817 (20.75)
(17)	15°	.0630 (1.60) .0580 (1.47)	.824 (20.93)	1 1/8 - 18 UNEF	.906 (23.01) .900 (22.86)	.897 (22.78) .891 (22.63)	1.130 (28.70)	.930 (23.62) .924 (23.47)
(19)	15°	.0720 (1.83) .0670 (1.70)	.956 (24.28)	1 1/4 - 18 UNEF	1.041 (26.44) 1.035 (26.29)	1.031 (26.21) 1.026 (26.06)	1.255 (31.88)	1.065 (27.05) 1.059 (26.90)
(23)	12°	.0680 (1.73) .0630 (1.60)	1.153 (29.29)	1 7/16 - 18 UNEF	1.228 (31.19) 1.222 (31.04)	1.219 (30.96) 1.213 (30.81)	1.443 (36.65)	1.252 (31.80) 1.246 (31.65)
(25)	10°	.0645 (1.04) .0595 (1.51)	1.322 (33.58)	1 9/16 - 18 UNEF	1.388 (35.26) 1.382 (35.10)	1.379 (35.03) 1.737 (34.87)	1.567 (39.80)	1.412 (35.86) 1.406 (35.71)
(29)	9°	.0680 (1.73) .0630 (1.60)	1.522 (38.66)	1 7/8 - 16 UN	1/639 (41.63) 1.633 (41.48)	1.630 (41.40) 1.624 (41.25)	1.880 (47.75)	1.663 (42.24) 1.657 (42.09)
(33)	8°	.0680 (1.73) .0630 (1.60)	1.720 (43.69)	2 1/16 - 16 N	1.834 (46.58) 1.828 (46.43)	1.825 (46.36) 1.819 (46.20)	2.067 (52.50)	1.858 (47.19) 1.852 (47.04)

NOTES:

1. Dimensions are in inches.
2. Dimensions apply after plating.

FIGURE 11. Back-end configuration for fiber optic connector, series 1 - type I, class A and type III, class A, style S - Continued.

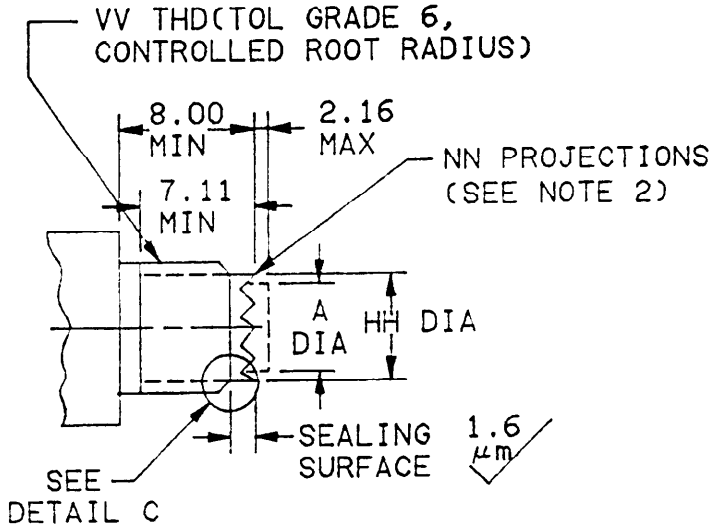

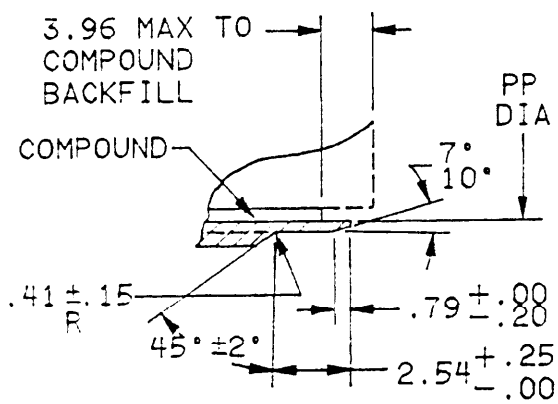

DETAIL C
ENLARGED

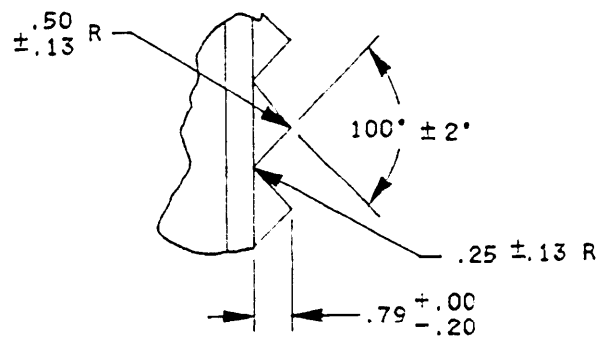

ENLARGED VIEW OF
PROJECTIONS AT HH DIA

Shell Size	A MAX	HH +.00	NN	PP MAX	VV THREAD
9	7.59	10.57	12	8.80	M12X1.0-6g 0.100R
11	10.85	13.56	16	12.07	M15
13	13.74	16.59	20	14.96	M18
15	16.92	20.57	24	18.14	M22
17	20.09	23.57	28	21.31	M25
19	22.78	26.57	32	24.00	M28
21	25.96	29.57	36	27.18	M31
23	29.13	32.56	40	30.35	M34
25	32.31	35.56	44	33.53	M37X1.0-6g 0.100R

NOTES:
1. Dimensions are in millimeters.
2. The centerline of indicated projection must be located on vertical centerline within 20° of -GG- (see main key/keyway polarization detail of figure 8 and figure 9).
3. Threads are to be inspected with a 6h go-gage and a 6g no-go-gage.

FIGURE 12. Rear interface dimensions for fiber optic interconnect, series 3 and 4 - type I, class A and type III, class A, style R.

Metric external thread dimensions (VV).

Designation (thread size)	Major diameter			Pitch diameter			Minor diameter	
	Max	Min	Tol	Max	Min	Tol	Max	Min
M12X1.0-6g 0.100R	11.974	11.794	.180	11.324	11.206	.118	10.747	10.557
M15	14.974	14.794		14.324	14.206	.118	13.747	13.557
M17	16.974	16.794		16.324	16.206	.118	15.747	15.557
M18	17.974	17.794		17.324	17.206	.118	16.747	16.557
M20	19.974	19.794		19.324	19.206	.118	18.747	18.557
M22	21.974	21.794		21.324	21.206	.118	20.747	20.557
M25	24.974	24.794		24.324	24.199	.125	23.747	23.550
M28	27.974	27.794		27.324	27.199	.125	26.747	26.550
M31	30.974	30.794		30.324	30.199	.125	29.747	29.550
M32	31.974	31.794		31.324	31.199	.125	30.747	30.550
M34	33.974	33.794		33.324	33.199	.125	32.747	32.550
M35	34.974	34.794		34.324	34.199	.125	33.747	33.550
M37	36.974	36.794		36.324	36.199	.125	35.747	35.550
M38	37.974	37.794		37.324	37.199	.125	36.747	36.550
M41	40.974	40.794		40.324	40.199	.125	39.747	39.550
M44	43.974	43.794		43.324	43.199	.125	42.747	42.550
M47X1.0-6g 0.100R	46.974	46.794	.180	46.324	46.199	.125	45.747	45.550

FIGURE 12. Rear interface dimensions for fiber optic interconnect, series 3 and 4 - type I, class A and type III, class A, style R - Continued.

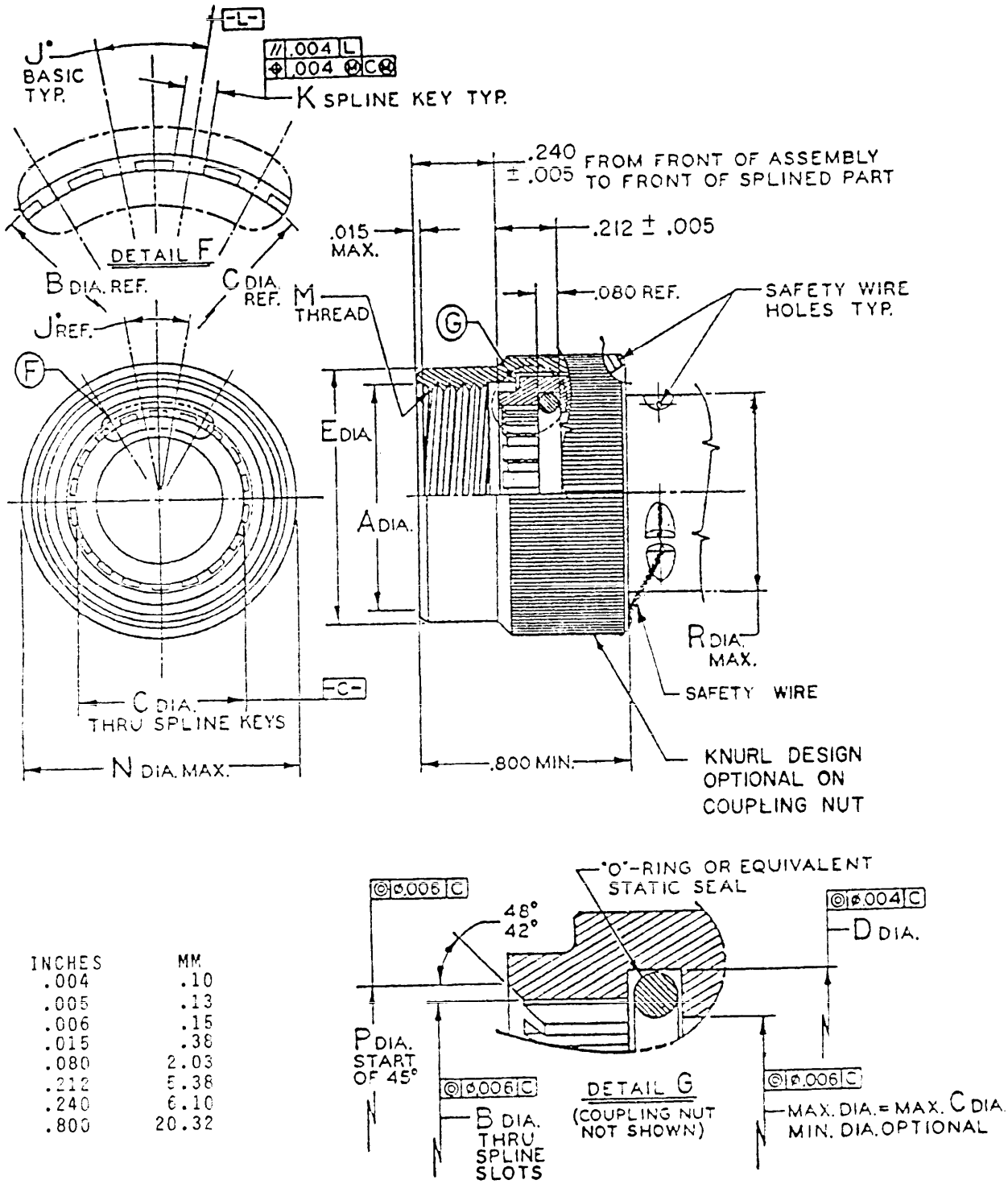

INCHES	MM
.004	.10
.005	.13
.006	.15
.015	.38
.080	2.03
.212	5.38
.240	6.10
.800	20.32

FIGURE 13. Interface dimensions for fiber optic connector accessory, series 1 - type I, class A and type III, class A, style S.

Shell sizes	A DIA.	B DIA.	C DIA.	D DIA.	J BSC	K
(11)	.770 (19.56) .750 (19.05)	.585 (14.86) .579 (14.71)	.559 (14.20) .553 (14.05)	.634 (16.10) .628 (15.95)	20°	.0445 (1.13) .0395 (1.00)
(13)	.895 (22.73) .875 (22.22)	.700 (17.78) .694 (17.63)	.674 (17.12) .665 (16.97)	.749 (19.02) .743 (18.87)	20°	.0545 (1.38) .0495 (1.26)
(15)	1.020 (25.91) 1.000 (25.40)	.835 (21.26) .829 (21.06)	.809 (20.55) .803 (20.40)	.834 (22.45) .878 (22.30)	15°	.0590 (1.50) .0540 (1.37)
(17)	1.145 (29.08) 1.125 (28.58)	.942 (23.92) .935 (23.77)	.916 (23.27) .910 (23.11)	.991 (25.17) .985 (25.02)	15°	.0560 (1.42) .0510 (1.30)
(19)	1.270 (32.26) 1.250 (31.75)	1.077 (27.36) 1.071 (27.20)	1.051 (26.70) 1.045 (26.54)	1.126 (28.60) 1.120 (28.45)	15°	.0650 (1.65) .0600 (1.52)
(23)	1.458 (37.03) 1.438 (36.52)	1.264 (32.11) 1.258 (31.95)	1.238 (31.45) 1.232 (31.29)	1.313 (33.35) 1.307 (33.20)	12°	.0610 (1.55) .0560 (1.42)
(25)	1.582 (40.18) 1.562 (39.67)	1.424 (36.17) 1.413 (36.02)	1.398 (35.51) 1.392 (35.36)	1.473 (37.41) 1.467 (37.26)	10°	.0575 (1.48) .0525 (1.33)
(29)	1.895 (48.13) 1.875 (47.62)	1.675 (42.55) 1.669 (42.39)	1.648 (41.88) 1.643 (41.73)	1.724 (43.79) 1.718 (43.64)	9°	.0610 (1.55) .0560 (1.42)
(33)	2.082 (52.88) 2.062 (52.37)	1.870 (47.50) 1.864 (47.35)	1.844 (46.84) 1.838 (46.69)	1.919 (48.74) 1.913 (48.59)	8°	.0610 (1.55) .0560 (1.42)

Shell sizes	E DIA.	M thread classes 2b	F DIA.	N DIA. MAX.
(11)	.887 (22.53) .865 (21.97)	3/4 - 20 UNEF	.617 (15.67) .605 (15.37)	1.028 (26.11)
(13)	1.011 (25.70) .990 (25.15)	7/8 - 20 UNEF	.732 (18.59) .720 (18.29)	1.141 (28.98)
(15)	1.199 (30.45) 1.177 (28.90)	1 - 20 UNEF	.867 (22.02) .855 (21.72)	1.263 (32.08)
(17)	1.262 (32.05) 1.240 (31.50)	1 1/8 - 18 UNEF	.974 (24.74) .962 (24.44)	1.387 (35.23)
(19)	1.449 (36.80) 1.427 (36.25)	1 1/4 - 18 UNEF	1.109 (28.17) 1.097 (27.86)	1.513 (38.43)
(23)	1.637 (41.58) 1.615 (41.02)	1 7/16 - 18 UNEF	1.298 (32.92) 1.284 (32.62)	1.703 (43.26)
(25)	1.762 (44.75) 1.740 (44.20)	1 9/16 - 18 UNEF	1.456 (36.98) 1.444 (36.68)	1.825 (46.36)
(29)	1.949 (49.50) 1.927 (48.95)	1 7/8 - 16 UN	1.707 (43.36) 1.695 (43.05)	2.143 (54.43)
(33)	2.137 (54.28) 2.115 (53.72)	2 1/16 - 16 N	1.902 (48.31) 1.890 (48.01)	2.329 (59.16)

NOTES:

1. Dimensions are in inches.
2. Dimensions apply after plating.
3. The coupling nut shall be captive and free to rotate.

FIGURE 13. Interface dimensions for fiber optic connector accessory, series 1 - type I, class A and type III, class A, style S - Continued.

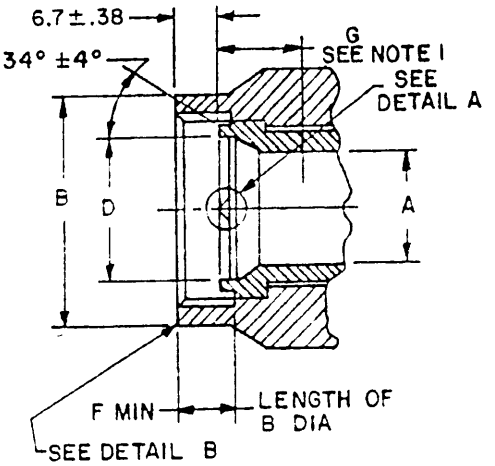

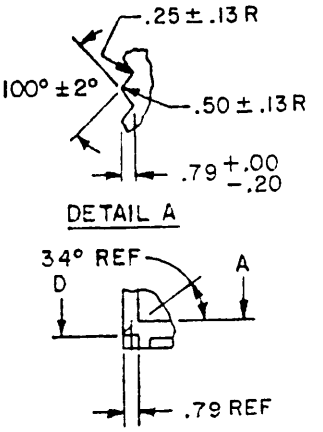

SLEEVE SIZE 25
ONLY LESS ACC NUT
DETAIL B (OPTIONAL DESIGN)

Shell Size	A DIA	B DIA	D 2/ DIA	F MIN DIM	G 1/ DIM	N NO. OF TEETH	V THREAD
9	(6.7) Min	(15.24) Max	(7.5) Min	(2.1)	(2.9)	12	(M12X1.0-6H)
11	(9.9) Min	(18.21) Max	(10.8) Min	(2.1)	(2.9)	16	(M15X1.0-6H)
13	(12.8) Min	(21.18) Max	(13.8) Min	(2.1)	(2.9)	20	(M18X1.0-6H)
15	(16.0) Min	(25.14) Max	(16.9) Min	(2.1)	(2.9)	24	(M22X1.0-6H)
17	(19.2) Min	(28.12) Max	(20.1) Min	(2.1)	(2.9)	28	(M25X1.0-6H)
19	(21.4) Min	(31.09) Max	(22.8) Min	(2.1)	(2.9)	32	(M28X1.0-6H)
21	(24.6) Min	(34.06) Max	(26.0) Min	(2.1)	(2.9)	36	(M31X1.0-6H)
23	(27.7) Min	(36.9) Max	(29.1) Min	(2.1)	(2.9)	40	(M34X1.0-6H)
25	(30.9)	(39.88)	(32.3)	(2.1)	(1.7)	44	(M37X1.0-6H)

1/ See note 1
2/ See note 2

NOTES:
1. Minimum penetration of "A" diameter from front of serrations.
2. Dimensions are in millimeters.

FIGURE 14. Front-end configuration for fiber optic connector accessory, series 3 and 4 - type I, class A and type III, class A, style R.

Metric internal thread dimensions (V).

Designation (threac size)	Minor diameter			Pitch diameter			Major diameter	
	Min	Max	Tol	Min	Max	Tol	Min	Max
M12X1.0-6H 0.100R	10.917	11.153	.236	11.350	11.510	.160	12.072	12.304
M15	13.917	14.153		14.350	14.510	.160	15.072	15.304
M17	15.917	16.153		16.350	16.510	.160	17.072	17.304
M18	16.917	17.153		17.350	17.510	.160	18.072	18.304
M20	18.917	19.153		19.350	19.510	.160	20.072	20.304
M22	20.917	21.153		21.350	21.510	.160	22.072	22.304
M25	23.917	24.153		24.350	24.520	.170	25.072	25.314
M28	26.917	27.153		27.350	27.520	.170	28.072	28.314
M31	29.917	30.153		30.350	30.520	.170	31.072	31.314
M32	30.917	31.153		31.350	31.520	.170	32.072	32.314
M34	32.917	33.153		33.350	33.520	.170	34.072	34.314
M35	33.917	34.153		34.350	34.520	.170	35.072	35.314
M37	35.917	36.153		36.350	36.520	.170	37.072	37.314
M38	36.917	37.153		37.350	37.520	.170	38.072	38.314
M41	39.917	40.153		40.350	40.520	.170	41.072	41.314
M44	42.917	43.153		43.350	43.520	.170	44.072	44.314
M47X1.0-6H 0.100R	45.917	46.153	.236	46.350	46.520	.170	47.072	47.314

FIGURE 14. Front-end configuration for fiber optic connector accessory, series 3 and 4 - type I, class A and type III, class A, style R - Continued.

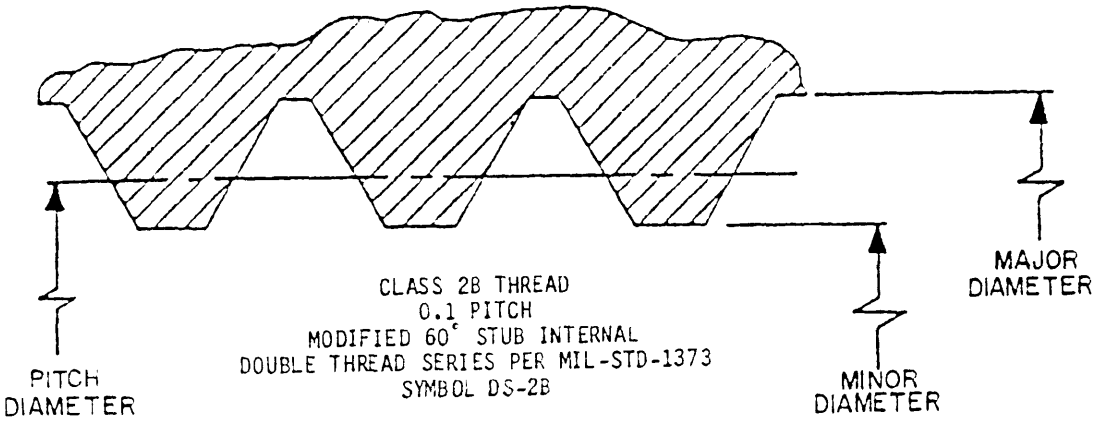

INTERNAL THREADS

DESIGNATION			EXTERNAL THREAD LIMITS OF SIZE							
			MINOR DIAMETER			PITCH DIAMETER			MAJOR DIAMETER	
THREAD			LIMITS			LIMITS			LIMITS	
SIZE	PITCH	LEAD	MAX	MIN	TOLERANCE	MAX	MIN	TOLERANCE	MAX	MIN
.7500	.1	.2	.7042	.7142	.0100	.7240	.7340	.0100	.7540	.7700
.8750	.1	.2	.8292	.8392	.0100	.8490	.8590	.0100	.8790	.8950
1.0625	.1	.2	1.0025	1.0145	.0120	1.0285	1.0405	.0120	1.0685	1.0565
1.1250	.1	.2	1.0650	1.0770	.0120	1.0910	1.1030	.0120	1.1490	1.1490
1.3125	.1	.2	1.2525	1.2645	.0120	1.2785	1.2905	.0120	1.3165	1.3365
1.5000	.1	.2	1.4400	1.4520	.0120	1.4660	1.4780	.0120	1.5040	1.5240
1.6250	.1	.2	1.5650	1.5770	.0120	1.5910	1.6030	.0120	1.6290	1.6490
1.8125	.1	.2	1.7525	1.7645	.0120	1.7785	1.7905	.0120	1.8165	1.8365
2.0000	.1	.2	1.9400	1.9520	.0120	1.9660	1.9780	.0120	2.0040	2.0240

NOTE: Formulas for these values are given in Table VII of MIL-STD-1373.
For all other dimensions not shown above refer to MIL-STD-1373.

FIGURE 15. Internal mating threads for fiber optic connector, series 1 - type I, class A and type III, class A, style S.

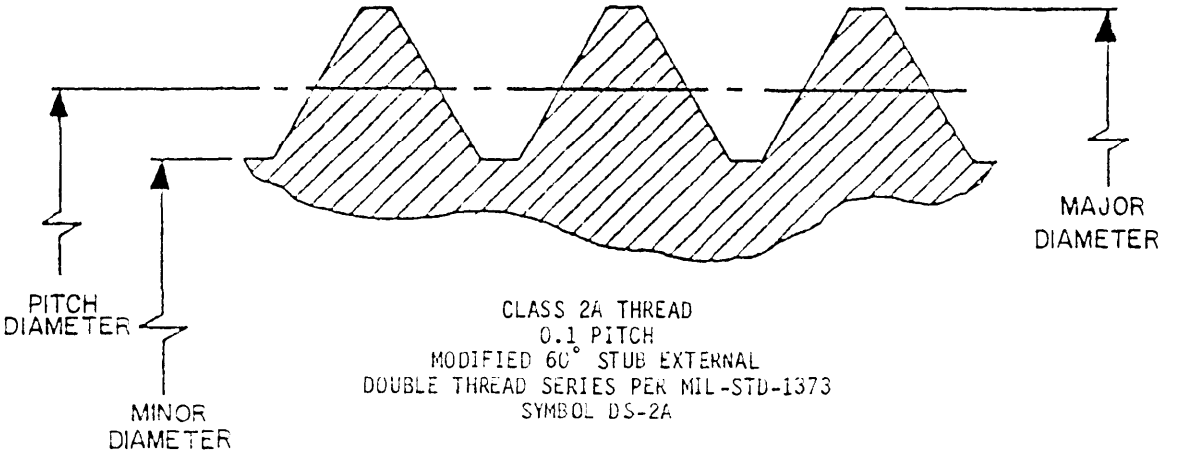

EXTERNAL THREAD

DESIGNATION			ALLOWANCE	EXTERNAL THREAD LIMITS OF SIZE							
				MAJOR DIAMETER			PITCH DIAMETER			MINOR DIAMETER	
				LIMITS			LIMITS			LIMITS	
THREAD SIZE	PITCH	LEAD		MAX	MIN	TOLERANCE	MAX	MIN	TOLERANCE	MAX	MIN
.7500	1.1	.2	.0015	.7485	.7405	.0080	.7225	.7145	.0080	.6925	.6785
.8750	.1	.2	.0015	.8735	.8655	.0080	.8475	.8395	.0080	.8175	.8035
1.0625	.1	.2	.0020	1.0605	1.0485	.0120	1.0265	1.0165	.0100	.9885	.9705
1.1250	.1	.2	.0020	1.1230	1.1110	.0120	1.0890	1.0790	.0100	1.0510	1.0330
1.3125	.1	.2	.0020	1.3105	1.2985	.0120	1.2765	1.2665	.0100	1.2385	1.2205
1.5000	.1	.2	.0020	1.4980	1.4860	.0120	1.4640	1.4540	.0100	1.4260	1.4080
1.6250	.1	.2	.0020	1.6230	1.6110	.0120	1.5890	1.5790	.0100	1.5510	1.5330
1.8125	.1	.2	.0020	1.8105	1.7985	.0120	1.7765	1.7665	.0100	1.7385	1.7205
2.0000	.1	.2	.0020	1.9980	1.9860	.0120	1.9640	1.9540	.0100	1.9260	1.9050

NOTE: Formulas for these values are given in Table VII of MIL-STD-1373.
For all other dimensions not shown above refer to MIL-STD-1373.

FIGURE 16. External mating threads for fiber optic connector, series 1 - type I, class A and type III, class A, style S.

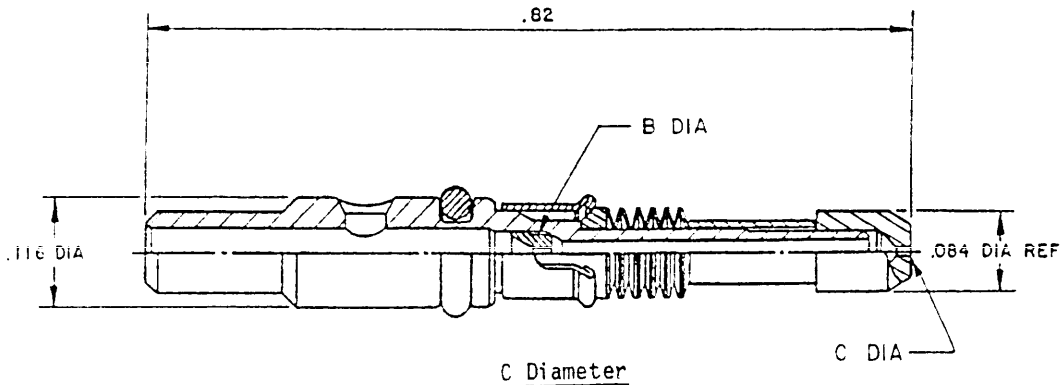

C Diameter

Fiber Diameters

MICRON	INCHES
1245	0049
127	0050
1295	0051
132	0052
1345	0053
137	0054
1395	0055
142	0056
145	0057
1475	0058
1905	0075
193	0076
1955	0077
198	0078
2005	0079
203	0080
2055	0081
208	0082
211	0083

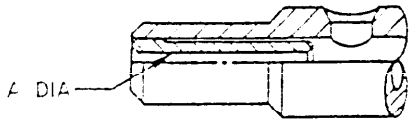

Contact Assembly, Pin, Size 16, Fiber Optic, Interface Design, Series 1, Type I, Classes A and B, Type III, Class A, Style R only

NOTES:
1. Dimensions are in inches.

A Diameter

Internal Buffer Diameters

IN	µM
.025	635
.035	889
.042	1067

B Diameter

Internal Guide Diameters

IN	µM
.010	254
.015	381
.020	508

The contact assembly is classified under patent disclosure number PD 76376 - Optical Connector Split Sleeve Alignment System.

FIGURE 17. Interface design for fiber optic terminal assembly, pin, series 1, type I, classes A and B, and type III, class A, style S.

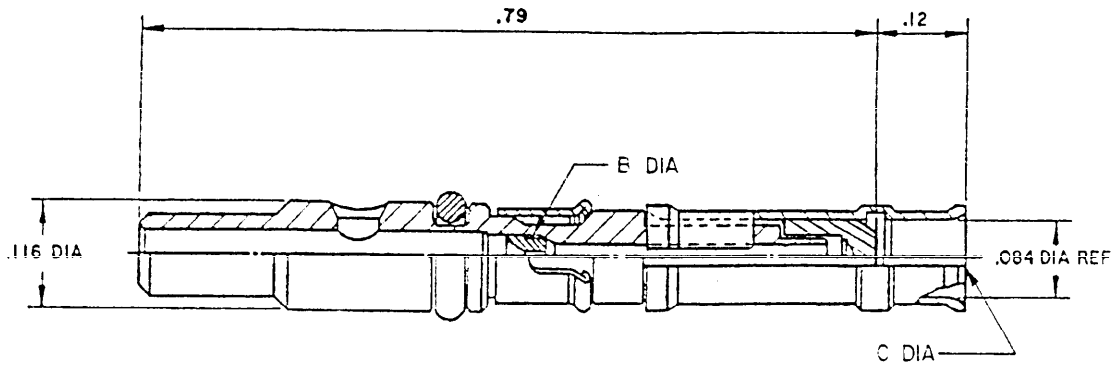

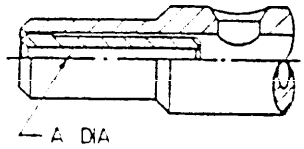

C Diameter

Fiber Diameters

MICRON	INCHES
1245	0049
127	0050
1295	0051
132	0052
1345	0053
137	0054
1395	0055
142	0056
145	0057
1475	0058
1905	0075
193	0076
1955	0077
198	0078
2005	0079
203	0080
2055	0081
208	0082
211	0083

Contact Assembly, Pin, Size 16, Fiber Optic, Interface Design, Series 1, Type I, Classes A and B, Type III, Class A, Style R only

NOTES:
1. Dimensions are in inches.

A Diameter

Internal Buffer Diameters

IN	µM
.025	635
.035	889
.042	1067

B Diameter

Internal Guide Diameters

IN	µM
.010	254
.015	381
.020	508

The contact assembly is classified under patent disclosure number PD 76376 - Optical Connector Split Sleeve Alignment System.

FIGURE 18. Interface design for fiber optic terminal assembly, socket, series 1 - type I, classes A and B, and type III, class A, style S.

*U.S. GOVERNMENT PRINTING OFFICE: 1985-505-038:20842

INSTRUCTIONS: In a continuing effort to make our standardization documents better, the DoD provides this form for use in submitting comments and suggestions for improvements. All users of military standardization documents are invited to provide suggestions. This form may be detached, folded along the lines indicated, taped along the loose edge *(DO NOT STAPLE)*, and mailed. In block 5, be as specific as possible about particular problem areas such as wording which required interpretation, was too rigid, restrictive, loose, ambiguous, or was incompatible, and give proposed wording changes which would alleviate the problems. Enter in block 6 any remarks not related to a specific paragraph of the document. If block 7 is filled out, an acknowledgement will be mailed to you within 30 days to let you know that your comments were received and are being considered.

NOTE: This form may not be used to request copies of documents, nor to request waivers, deviations, or clarification of specification requirements on current contracts. Comments submitted on this form do not constitute or imply authorization to waive any portion of the referenced document*(s)* or to amend contractual requirements.

(Fold along this line)

(Fold along this line)

DEPARTMENT OF THE ARMY

DRSEL-ED-TO
Fort Monmouth, NJ 07703

OFFICIAL BUSINESS
PENALTY FOR PRIVATE USE $300

NO POSTAGE NECESSARY IF MAILED IN THE UNITED STATES

BUSINESS REPLY CARD

FIRST CLASS PERMIT NO. 12062 WASHINGTON D. C.

POSTAGE WILL BE PAID BY THE DEPARTMENT OF THE ARMY

Commander
US Army Communications-Electronics Command
ATTN: DRSEL-ED-TO
Fort Monmouth, NJ 07703

STANDARDIZATION DOCUMENT IMPROVEMENT PROPOSAL

(See Instructions – Reverse Side)

1. DOCUMENT NUMBER	2. DOCUMENT TITLE
MIL-STD-1863A	Interface Designs and Dimensions for Fiber Optic Interconnection Devices

3a. NAME OF SUBMITTING ORGANIZATION	4. TYPE OF ORGANIZATION *(Mark one)*
	☐ VENDOR
	☐ USER
b. ADDRESS *(Street, City, State, ZIP Code)*	☐ MANUFACTURER
	☐ OTHER *(Specify)*: _____

5. PROBLEM AREAS

a. Paragraph Number and Wording:

b. Recommended Wording:

c. Reason/Rationale for Recommendation:

6. REMARKS

7a. NAME OF SUBMITTER *(Last, First, MI)* – Optional	b. WORK TELEPHONE NUMBER *(Include Area Code)* – Optional
c. MAILING ADDRESS *(Street, City, State, ZIP Code)* – Optional	8. DATE OF SUBMISSION *(YYMMDD)*

DD FORM 1426 PREVIOUS EDITION IS OBSOLETE.