Downloaded from http://www.everyspec.com

INCH-POUND

MIL-STD-1698B
30 April 2009
SUPERSEDING
MIL-STD-1698A
19 September 2008

DEPARTMENT OF DEFENSE
INTERFACE STANDARD

INSERT ARRANGEMENTS
FOR MIL-DTL-28840 HIGH DENSITY HIGH SHOCK CIRCULAR ELECTRICAL CONNECTORS

AMSC N/A

FSC 5935

Downloaded from http://www.everyspec.com

FORWARD

1. This standard is approved for use by all Departments and Agencies of the Department of Defense.

2. Comments, suggestions, or questions on this document should be addressed to Commander, Defense Supply Center Columbus, ATTN: VAI, P.O. Box 3990, Columbus, Ohio, 43218-3990 or emailed to CircularConnector@dla.mil. Since contact information can change, you may want to verify the currency of this address information using the ASSIST Online database at http://assist.daps.dla.mil.

Downloaded from http://www.everyspec.com

CONTENTS

PARAGRAPH PAGE

FORWARD ii

1. SCOPE 1
1.1 Scope 1

2. APPLICABLE DOCUMENTS 1
2.1 General 1
2.2 Government documents 1
2.2.1 Specifications, standards, and handbooks 1
2.3 Non-Government publications 1
2.4 Order of precedence 1

3. DEFINITIONS 2
3.1 Definitions 2

4. GENERAL REQUIREMENTS 2
4.1 Recycled, recovered, or environmentally preferable materials 2

5. DETAILED REQUIREMENTS 2
5.1 Dimensions 2
5.2 Main key or keyway polarization 3
5.3 Contacts 3
5.4 Marking 3
5.5 Drawing notes 3

6. NOTES
6.1 Intended use 3
6.2 Cross-reference 3
6.3 Subject term (key word) listing 4
6.4 Changes from previous issue 4

FIGURES

1. Connector, electrical, position key and keyways, mating 4

2. Insert arrangement shell size 11 6

3. Insert arrangement shell size 13 7

4. Insert arrangement shell size 15 8

5. Insert arrangement shell size 17 9

6. Insert arrangement shell size 19 10

7. Insert arrangement shell size 23 12

Downloaded from http://www.everyspec.com

8. Insert arrangement shell size 25 14

9. Insert arrangement shell size 29 17

10. Insert arrangement shell size 33 20

CONCLUDING MATERIAL 24

Downloaded from http://www.everyspec.com

1. SCOPE

1.1 Scope. This standard covers insert arrangements for use with MIL-DTL-28840 (classes D, DS, DJ, and DJS) electrical, circular connectors.

2. APPLICABLE DOCUMENTS

2.1 General. The documents listed in this section are specified in sections 3, 4, and 5 of this standard. This section does not include documents cited in other sections of this standard or recommended for additional information or as examples. While every effort has been made to ensure the completeness of this list, document users are cautioned that they must meet all specified requirements documents cited in sections 3, 4, and 5 of this standard whether or not they are listed.

2.2 Government documents.

2.2.1 Specifications, standards, and handbooks. The following specifications, standards, and handbooks form a part of this document to the extent specified herein. Unless otherwise specified, the issues of these documents are those cited in the solicitation or contract.

DEPARTMENT OF DEFENSE SPECIFICATION

MIL-DTL-28840 - Connectors, Electrical, Circular Threaded, High Density, High Shock Shipboard, Class D, General Specification For.

(Copies of these documents are available online at http://assist.daps.dla.mil/quicksearch/ or from the Standardization Document Order Desk, 700 Robbins Avenue, Building 4D, Philadelphia, PA 19111-5094.)

2.3 Non-Government publications. The following documents form a part of this document to the extent specified herein. Unless otherwise specified, the issues of these documents are those cited in the solicitation or contract.

ASME INTERNATIONAL

ASME Y14.5M - Dimensioning and Tolerancing

(Copy of this document is available online at http://www.asme.org or from the ASME International, Three Park Avenue, New York, NY 10016-5990.)

SAE INTERNATIONAL

SAE-AS39029/83 - Contacts, Electrical Connector, Pin, Crimp Removable (For MIL-DTL-28840 Connectors).
SAE-AS39029/84 - Contacts, Electrical Connector, Socket, Crimp Removable (For MIL-DTL-28840 Connectors).

(Copies of these documents are available at http://www.sae.org or SAE International, 400 Commonwealth Drive, Warrendale, PA 15096-001.)

2.4 Order of precedence. Unless otherwise noted herein or in the contract, in the event of a conflict between the text of this document and the references cited herein, the text of this document takes

Downloaded from http://www.everyspec.com

precedence. Nothing in this document, however, supersedes applicable laws and regulations unless a specific exemption has been obtained.

3. DEFINITIONS

3.1 Definitions. The terms used in this standard are generally accepted by the electrical and electronics industries and commonly used in electrical connector engineering practice.

4. GENERAL REQUIREMENTS

4.1 Recycled, recovered, or environmentally preferable materials. Recycled, recovered, or environmentally preferable materials should be used to the maximum extent possible, provided that the materials meets or exceeds the operational and maintenance requirements, and promotes economical advantageous life cycle costs.

5. DETAILED REQUIREMENTS

5.1 Dimensions. Dimensions shall be in accordance with the applicable section of this standard and the following dimensional data:

a. Dimensioning and tolerancing in accordance with ASME Y14.5M. Dimensions are true position and in inches.

b. Metric equivalents are given for information only.

c. Dimensions and markings shown are for engaging face of pin insert. Socket insert is opposite.

d. The following tolerances apply to insert installed in shell:

1. Center of each hole in insert for crimp contact connectors shall be located at true position within .010 dia. $\boxed{\oplus\ .010\ \text{DIA}}$

2. The center of engaging end of each contact shall be located in true position within .018 dia. $\boxed{\oplus\ .018\ \text{DIA}}$

e. Unless otherwise indicated, dimensions are symmetrical about centerline. ↑ indicates ℄ of insert arrangement.

f. Each insert is shown in the “normal position” in the shell.

g. Polarization shall be in accordance with MIL-DTL-28840.

Downloaded from http://www.everyspec.com

5.2 Main key or keyway polarization (see figure 1).

a. Each insert arrangement is shown in the “normal position” in the shell.

b. In the “alternate keying position” the keys or keyways are positioned as indicated with reference to the master key or keyway.

5.3 Contacts. Contacts shall be in accordance with SAE-AS39029/83 and SAE-AS39029/84.

5.4 Marking. Marking shall be in accordance with MIL-DTL-28840 and as shown in the applicable section of this standard.

5.5 Drawing notes. The following information is applicable to all figures of this standard.

a. Dimensions are in inches.

b. Metric equivalents are given for general information only.

6. NOTES

(This section contains information of a general or explanatory nature that may be helpful, but is not mandatory.)

6.1 Intended use. This standard covers insert arrangements for use with MIL-DTL-28840. Information pertaining to shell size designator, arrangement number, shell size, number of contacts, size of contacts, service rating, and contact location is contained in this document.

6.2 Cross-reference. See table I for cross-reference of previous sections and current figures.

TABLE I. Cross reference of figures to sections

Title	Current figure	Previous section
Insert arrangement shell size 11	2	90
Insert arrangement shell size 13	3	10
Insert arrangement shell size 15	4	20
Insert arrangement shell size 17	5	30
Insert arrangement shell size 19	6	40
Insert arrangement shell size 23	7	50
Insert arrangement shell size 25	8	60
Insert arrangement shell size 29	9	70
Insert arrangement shell size 33	10	80

Downloaded from http://www.everyspec.com

6.3 Subject term (key word) listing.

Shell size
Contacts
Socket
Plug

6.4 Changes from previous issue. Marginal notations are not used in this revision to identify changes with respect to the previous issue, due to the extent of the changes.

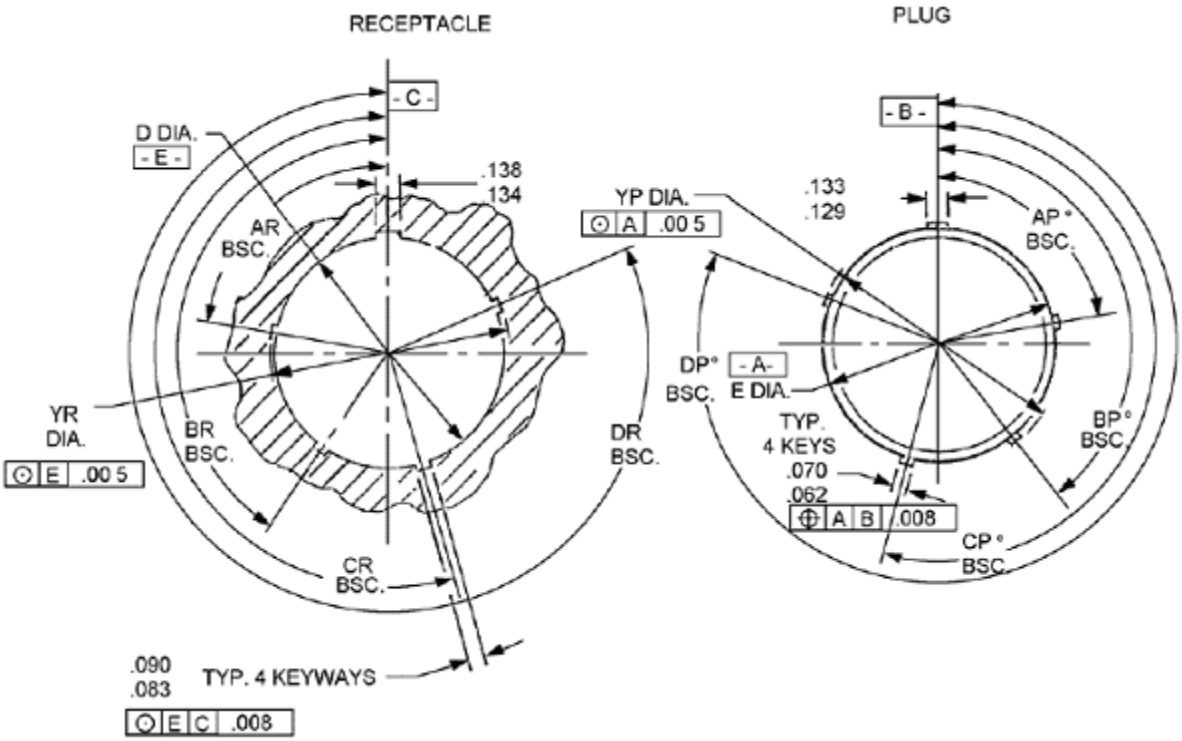

Inches	mm	Inches	mm
.005	0.13	.090	2.29
.008	0.20	.129	3.28
.062	1.57	.133	3.38
.070	1.78	.134	3.40
.083	2.11	.138	3.51

FIGURE 1. Connector, electrical, position key and keyways, mating.

Downloaded from http://www.everyspec.com

Designator (see note 1)	YP dia	YR dia.	Key & keyway arrangement	ARº or APº BSC	BRº or BPº BSC	CRº or CPº BSC	DRº or DPº BSC
A(11)	.559 (14.20) .551 (14.00)	.581 (14.76) .569 (14.45)	1	95	141	208	236
			2	113	156	182	292
			3	90	145	195	252
B(13)	.683 (17.35) .675 (17.15)	.705 (17.91) .693 (17.60)	4	53	156	220	255
			5	119	146	176	298
			6	51	141	184	242
C(15)	.855 (21.72) .847 (21.51)	.877 (22.28) .865 (21.97)	1	80	142	196	293
			2	135	170	200	310
			3	49	169	200	244
D(17)	.925 (23.50) .917 (23.29)	.947 (24.05) .935 (23.75)	4	66	140	200	257
			5	62	145	180	280
			6	79	153	197	272
E(19)	1.092 (27.74) 1.084 (27.53)	1.114 (28.30) 1.102 (27.99)	1	80	142	196	293
F(23)	1.277 (32.44) 1.269 (32.23)	1.299 (32.99) 1.287 (32.69)	2	135	170	200	310
			3	49	169	200	244
G(25)	1.438 (36.53) 1.430 (36.32)	1.460 (37.08) 1.448 (36.78)	4	66	140	200	257
H(29)	1.604 (40.74) 1.596 (40.54)	1.626 (41.30) 1.614 (41.00)	5	62	145	180	280
J(33)	1.796 (45.62) 1.788 (45.42)	1.818 (46.18) 1.806 (45.87)	6	79	153	197	272

NOTES:
1. Shell sizes are provided within parentheses for information and are not a part of the designator.
2. Dimensions apply after plating.

FIGURE 1. Connector, electrical, position key and keyways, mating – Continued.

Downloaded from http://www.everyspec.com

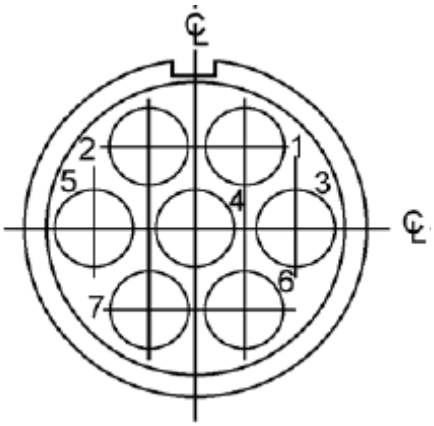

Contacts					
Contact position ID	Location		Contact position ID	Location	
	X-axis (mm)	Y-axis (mm)		X-axis (mm)	Y-axis (mm)
1	+.057 (1.45)	+.099 (2.51)	5	-.114 (2.90)	+.000 (.00)
2	-.075 (1.91)	+.099 (2.51)	6	+.057 (1.45)	-.099 (2.51)
3	+.114 (2.90)	+.000 (.00)	7	-.057 (1.45)	-.099 (2.51)
4	+.000 (.00)	+.000 (.00)			

Shell size designator	Arrangement number	Shell size	Number of contacts	Size contacts	Service rating	Contact location
A	1	11	7	20	A	All

FIGURE 2. Insert arrangement shell size 11.

Downloaded from http://www.everyspec.com

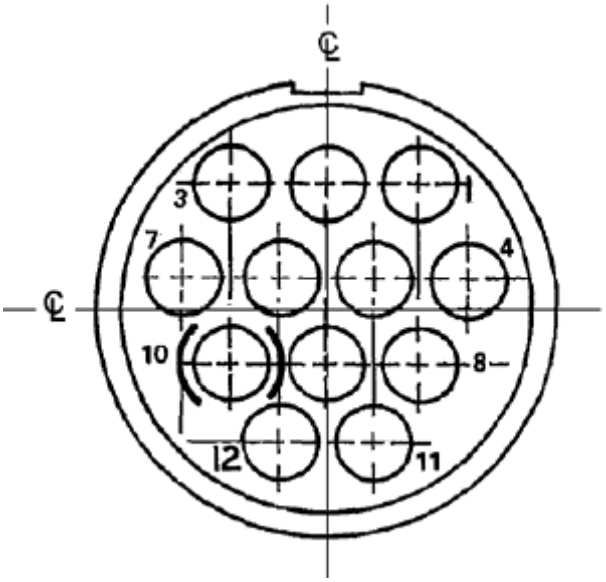

Contacts					
Contact position ID	Location		Contact position ID	Location	
	X-axis (mm)	Y-axis (mm)		X-axis (mm)	Y-axis (mm)
1	+.114 (2.90)	+.132 (3.35)	7	-.171 (4.34)	+.033 (.84)
2	+.000 (.00)	+.132 (3.35)	8	+.114 (2.90)	-.066 (1.68)
3	-.114 (2.90)	+.132 (3.35)	9	+.000 (.00)	-.066 (1.68)
4	+.171 (4.34)	+.033 (.84)	10	-.114 (2.90)	-.066 (1.68)
5	+.057 (1.45)	+.033 (.84)	11	+.057 (1.45)	-.165 (4.19)
6	-.057 (1.45)	+.033 (.84)	12	-.057 (1.45)	-.165 (4.19)

Shell size designator	Arrangement number	Shell size	Number of contacts	Size contacts	Service rating	Contact location
B	1	13	12	20	A	All

FIGURE 3. Insert arrangement shell size 13.

Downloaded from http://www.everyspec.com

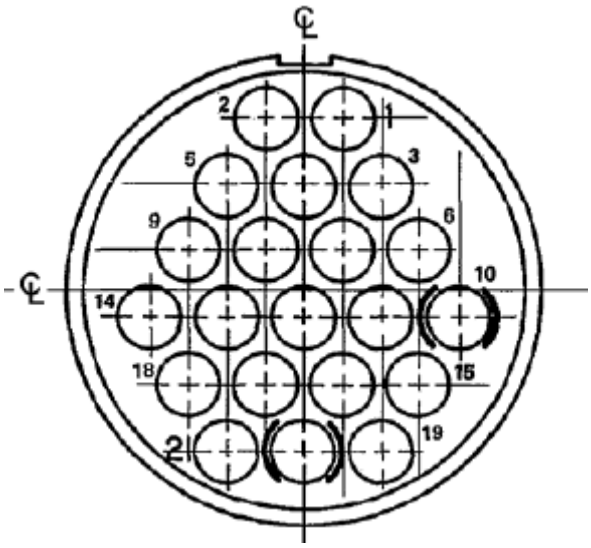

Contacts					
Contact position ID	Location		Contact position ID	Location	
	X-axis (mm)	Y-axis (mm)		X-axis (mm)	Y-axis (mm)
1	+.057 (1.45)	+.257 (6.53)	12	+.000 (.00)	-.040 (1.02)
2	-.057 (1.45)	+.257 (6.53)	13	-.114 (2.90)	-.040 (1.02)
3	+.114 (2.90)	+.158 (4.01)	14	-.228 (5.79)	-.040 (1.02)
4	+.000 (.00)	+.158 (4.01)	15	+.171 (4.34)	-.139 (3.53)
5	-.114 (2.90)	+.158 (4.01)	16	+.057 (1.45)	-.139 (3.53)
6	+.171 (4.34)	+.059 (1.50)	17	-.057 (1.45)	-.139 (3.53)
7	+.057 (1.45)	+.059 (1.50)	18	-.171 (4.34)	-.139 (3.53)
8	-.057 (1.45)	+.059 (1.50)	19	+.114 (2.90)	-.238 (6.05)
9	-.171 (4.34)	+.059 (1.50)	20	+.000 (.00)	-.238 (6.05)
10	+.228 (5.79)	-.040 (1.02)	21	-.114 (2.90)	-.238 (6.05)
11	+.114 (2.90)	-.040 (1.02)			

Shell size designator	Arrangement number	Shell size	Number of contacts	Size contacts	Service rating	Contact location
C	1	15	21	20	A	All

FIGURE 4. Insert arrangement shell size 15.

Downloaded from http://www.everyspec.com

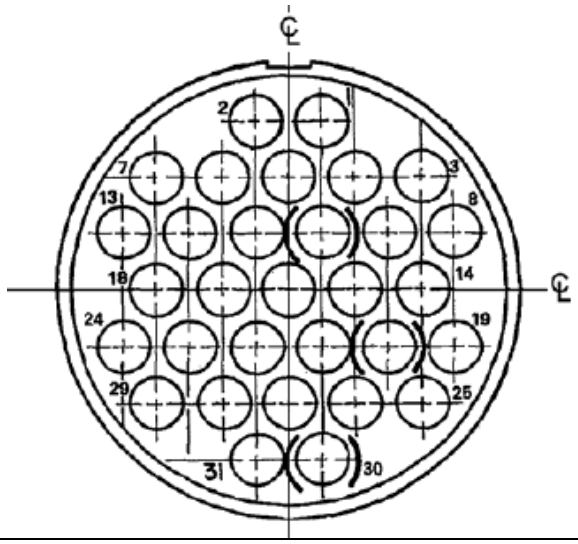

Contacts					
Contact position ID	Location		Contact position ID	Location	
	X-axis (mm)	Y-axis (mm)		X-axis (mm)	Y-axis (mm)
1	+.057 (1.45)	+.297 (7.54)	17	-.114 (2.90)	+.000 (.00)
2	-.057 (1.45)	+.297 (7.54)	18	-.228 (5.79)	+.000 (.00)
3	+.228 (5.79)	+.198 (5.03)	19	+.285 (7.24)	-.099 (2.51)
4	+.114 (2.90)	+.198 (5.03)	20	+.171 (4.34)	-.099 (2.51)
5	+.000 (.00)	+.198 (5.03)	21	+.057 (1.45)	-.099 (2.51)
6	-.114 (2.90)	+.198 (5.03)	22	-.057 (1.45)	-.099 (2.51)
7	-.228 (5.79)	+.198 (5.03)	23	-.171 (4.34)	-.099 (2.51)
8	+.285 (7.24)	+.099 (2.51)	24	-.285 (7.24)	-.099 (2.51)
9	+.171 (4.34)	+.099 (2.51)	25	+.228 (5.79)	-.198 (5.03)
10	+.057 (1.45)	+.099 (2.51)	26	+.114 (2.90)	-.198 (5.03)
11	-.057 (1.45)	+.099 (2.51)	27	+.000 (.00)	-.198 (5.03)
12	-.171 (4.34)	+.099 (2.51)	28	-.114 (2.90)	-.198 (5.03)
13	-.285 (7.24)	+.099 (2.51)	29	-.228 (5.79)	-.198 (5.03)
14	+.228 (5.79)	+.000 (.00)	30	+.057 (1.45)	-.297 (7.54)
15	+.114 (2.90)	+.000 (.00)	31	-.057 (1.45)	-.297 (7.54)
16	+.000 (.00)	+.000 (.00)			

Shell size designator	Arrangement number	Shell size	Number of contacts	Size contacts	Service rating	Contact location
D	1	17	31	20	A	All

FIGURE 5. Insert arrangement shell size 17.

Downloaded from http://www.everyspec.com

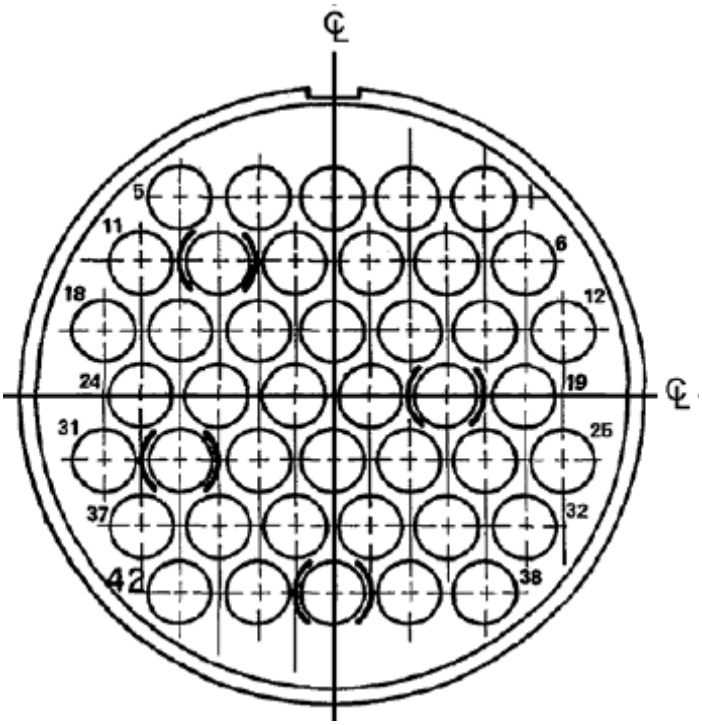

Contacts					
Contact position ID	Location		Contact position ID	Location	
	X-axis (mm)	Y-axis (mm)		X-axis (mm)	Y-axis (mm)
1	+.228 (5.79)	+.297 (7.54)	22	-.057 (1.45)	+.000 (.00)
2	+.114 (2.90)	+.297 (7.54)	23	-.171 (4.34)	+.000 (.00)
3	+.000 (.00)	+.297 (7.54)	24	-.285 (7.24)	+.000 (.00)
4	-.114 (2.90)	+.297 (7.54)	25	+.342 (8.69)	-.099 (2.51)
5	-.228 (5.79)	+.297 (7.54)	26	+.228 (5.79)	-.099 (2.51)
6	+.285 (7.24)	+.198 (5.03)	27	+.114 (2.90)	-.099 (2.51)
7	+.171 (4.34)	+.198 (5.03)	28	+.000 (.00)	-.099 (2.51)
8	+.057 (1.45)	+.198 (5.03)	29	-.114 (2.90)	-.099 (2.51)
9	-.057 (1.45)	+.198 (5.03)	30	-.228 (5.79)	-.099 (2.51)
10	-.171 (4.34)	+.198 (5.03)	31	-.342 (8.69)	-.099 (2.51)
11	-.285 (7.24)	+.198 (5.03)	32	+.285 (7.24)	-.198 (5.03)
12	+.342 (8.69)	+.099 (2.51)	33	+.171 (4.34)	-.198 (5.03)
13	+.228 (5.79)	+.099 (2.51)	34	+.057 (1.45)	-.198 (5.03)
14	+.114 (2.90)	+.099 (2.51)	35	-.057 (1.45)	-.198 (5.03)

FIGURE 6. Insert arrangement shell size 19.

Downloaded from http://www.everyspec.com

Contacts					
Contact position ID	Location		Contact position ID	Location	
	X-axis (mm)	Y-axis (mm)		X-axis (mm)	Y-axis (mm)
15	+.000 (.00)	+.099 (2.51)	36	-.171 (4.34)	-.198 (5.03)
16	-.114 (2.90)	+.099 (2.51)	37	-.285 (7.24)	-.198 (5.03)
17	-.228 (5.79)	+.099 (2.51)	38	+.228 (5.79)	-.297 (7.54)
18	-.342 (8.69)	+.099 (2.51)	39	+.114 (2.90)	-.297 (7.54)
19	+.285 (7.24)	+.000 (.00)	40	+.000 (.00)	-.297 (7.54)
20	+.171 (4.34)	+.000 (.00)	41	-.114 (2.90)	-.297 (7.54)
21	+.057 (1.45)	+.000 (.00)	42	-.228 (5.79)	-.297 (7.54)

Shell size designator	Arrangement number	Shell size	Number of contacts	Size contacts	Service rating	Contact location
E	1	19	42	20	A	All

FIGURE 6. Insert arrangement shell size 19 - Continued.

Downloaded from http://www.everyspec.com

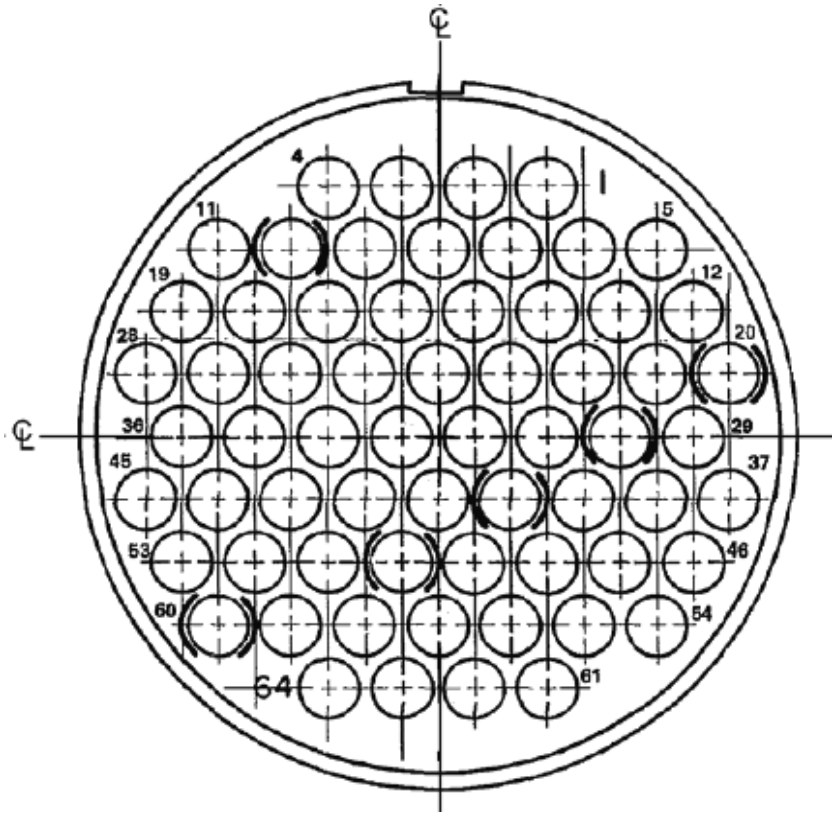

Contacts					
Contact position ID	Location		Contact position ID	Location	
	X-axis (mm)	Y-axis (mm)		X-axis (mm)	Y-axis (mm)
1	+.171 (4.34)	+.396 (10.06)	33	-.057 (1.45)	+.000 (.00)
2	+.057 (1.45)	+.396 (10.06)	34	-.171 (4.34)	+.000 (.00)
3	-.057 (1.45)	+.396 (10.06)	35	-.285 (7.24)	+.000 (.00)
4	-.171 (4.34)	+.396 (10.06)	36	-.399 (10.13)	+.000 (.00)
5	+.342 (8.69)	+.297 (7.54)	37	+.456 (11.58)	-.099 (2.51)
6	+.228 (5.79)	+.297 (7.54)	38	+.342 (8.69)	-.099 (2.51)
7	+.114 (2.90)	+.297 (7.54)	39	+.228 (5.79)	-.099 (2.51)
8	+.000 (.00)	+.297 (7.54)	40	+.114 (2.90)	-.099 (2.51)
9	-.114 (2.90)	+.297 (7.54)	41	+.000 (.00)	-.099 (2.51)
10	-.228 (5.79)	+.297 (7.54)	42	-.114 (2.90)	-.099 (2.51)
11	-.342 (8.69)	+.297 (7.54)	43	-.228 (5.79)	-.099 (2.51)

FIGURE 7. Insert arrangement shell size 23.

Downloaded from http://www.everyspec.com

Contacts					
Contact position ID	Location		Contact position ID	Location	
	X-axis (mm)	Y-axis (mm)		X-axis (mm)	Y-axis (mm)
12	+.399 (10.13)	+.198 (5.03)	44	-.342 (8.69)	-.099 (2.51)
13	+.285 (7.24)	+.198 (5.03)	45	-.456 (11.58)	-.099 (2.51)
14	+.171 (4.34)	+.198 (5.03)	46	+.399 (10.13)	-.198 (5.03)
15	+.057 (1.45)	+.198 (5.03)	47	+.285 (7.24)	-.198 (5.03)
16	-.057 (1.45)	+.198 (5.03)	48	+.171 (4.34)	-.198 (5.03)
17	-.171 (4.34)	+.198 (5.03)	49	+.057 (1.45)	-.198 (5.03)
18	-.285 (7.24)	+.198 (5.03)	50	-.057 (1.45)	-.198 (5.03)
19	-.399 (10.13)	+.198 (5.03)	51	-.171 (4.34)	-.198 (5.03)
20	+.456 (11.58)	+.099 (2.51)	52	-.285 (7.24)	-.198 (5.03)
21	+.342 (8.69)	+.099 (2.51)	53	-.399 (10.13)	-.198 (5.03)
22	+.228 (5.79)	+.099 (2.51)	54	+.342 (8.69)	-.297 (7.54)
23	+.114 (2.90)	+.099 (2.51)	55	+.228 (5.79)	-.297 (7.54)
24	+.000 (.00)	+.099 (2.51)	56	+.114 (2.90)	-.297 (7.54)
25	-.114 (2.90)	+.099 (2.51)	57	+.000 (.00)	-.297 (7.54)
26	-.228 (5.79)	+.099 (2.51)	58	-.114 (2.90)	-.297 (7.54)
27	-.342 (8.69)	+.099 (2.51)	59	-.228 (5.79)	-.297 (7.54)
28	-.456 (11.58)	+.099 (2.51)	60	-.342 (8.69)	-.297 (7.54)
29	+.399 (10.13)	+.000 (.00)	61	+.171 (4.34)	-.396 (10.06)
30	+.285 (7.24)	+.000 (.00)	62	+.057 (1.45)	-.396 (10.06)
31	+.171 (4.34)	+.000 (.00)	63	-.057 (1.45)	-.396 (10.06)
32	+.057 (1.45)	+.000 (.00)	64	-.171 (4.34)	-.396 (10.06)

Shell size designator	Arrangement number	Shell size	Number of contacts	Size contacts	Service rating	Contact location
F	1	23	64	20	A	All

FIGURE 7. Insert arrangement shell size 23 – Continued.

Downloaded from http://www.everyspec.com

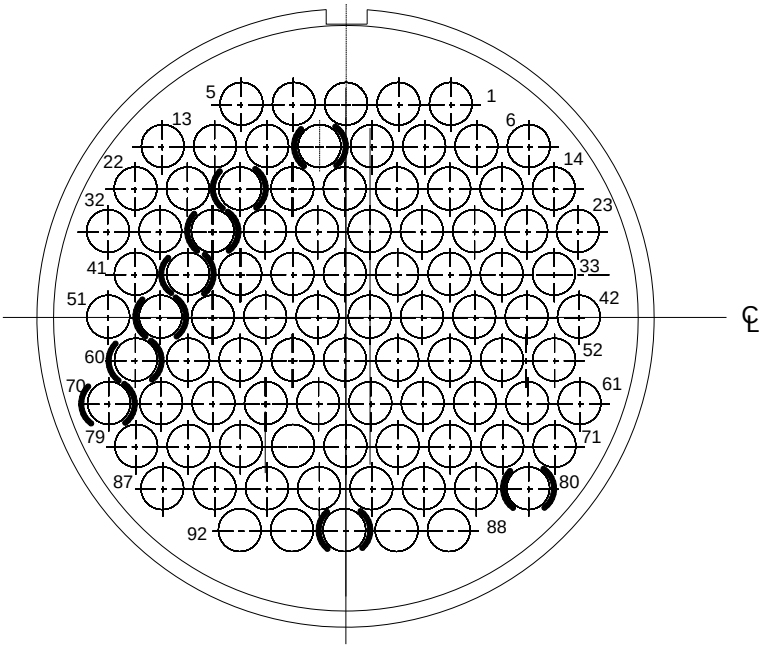

Contacts					
Contact position ID	Location		Contact position ID	Location	
	X-axis (mm)	Y-axis (mm)		X-axis (mm)	Y-axis (mm)
1	+.228 (5.79)	+.495 (12.57)	47	-.057 (1.45)	+.000 (.00)
2	+.114 (2.90)	+.495 (12.57)	48	-.171 (4.34)	+.000 (.00)
3	+.000 (.00)	+.495 (12.57)	49	-.285 (7.24)	+.000 (.00)
4	-.114 (2.90)	+.495 (12.57)	50	-.399 (10.13)	+.000 (.00)
5	-.228 (5.79)	+.495 (12.57)	51	-.513 (13.03)	+.000 (.00)
6	+.399 (10.13)	+.396 (10.06)	52	+.456 (11.58)	-.099 (2.51)
7	+.285 (7.24)	+.396 (10.06)	53	+.342 (8.69)	-.099 (2.51)
8	+.171 (4.34)	+.396 (10.06)	54	+.228 (5.79)	-.099 (2.51)
9	+.057 (1.45)	+.396 (10.06)	55	+.114 (2.90)	-.099 (2.51)
10	-.057 (1.45)	+.396 (10.06)	56	+.000 (.00)	-.099 (2.51)
11	-.171 (4.34)	+.396 (10.06)	57	-.114 (2.90)	-.099 (2.51)

FIGURE 8. Insert arrangement shell size 25.

Downloaded from http://www.everyspec.com

Contacts					
Contact position ID	Location		Contact position ID	Location	
	X-axis (mm)	Y-axis (mm)		X-axis (mm)	Y-axis (mm)
12	-.285 (7.24)	+.396 (10.06)	58	-.228 (5.79)	-.099 (2.51)
13	-.399 (10.13)	+.396 (10.06)	59	-.342 (8.69)	-.099 (2.51)
14	+.456 (11.58)	+.297 (7.54)	60	-.456 (11.58)	-.099 (2.51)
15	+.342 (8.69)	+.297 (7.54)	61	+.513 (13.03)	-.198 (5.03)
16	+.228 (5.79)	+.297 (7.54)	62	+.399 (10.13)	-.198 (5.03)
17	+.114 (2.90)	+.297 (7.54)	63	+.285 (7.24)	-.198 (5.03)
18	+.000 (.00)	+.297 (7.54)	64	+.171 (4.34)	-.198 (5.03)
19	-.114 (2.90)	+.297 (7.54)	65	+.057 (1.45)	-.198 (5.03)
20	-.228 (5.79)	+.297 (7.54)	66	-.057 (1.45)	-.198 (5.03)
21	-.342 (8.69)	+.297 (7.54)	67	-.171 (4.34)	-.198 (5.03)
22	-.456 (11.58)	+.297 (7.54)	68	-.285 (7.24)	-.198 (5.03)
23	+.513 (13.03)	+.198 (5.03)	69	-.399 (10.13)	-.198 (5.03)
24	+.399 (10.13)	+.198 (5.03)	70	-.513 (13.03)	-.297 (7.54)
25	+.285 (7.24)	+.198 (5.03)	71	+.456 (11.58)	-.297 (7.54)
26	+.171 (4.34)	+.198 (5.03)	72	+.342 (8.69)	-.297 (7.54)
27	+.057 (1.45)	+.198 (5.03)	73	+.228 (5.79)	-.297 (7.54)
28	-.057 (1.45)	+.198 (5.03)	74	+.114 (2.90)	-.297 (7.54)
29	-.171 (4.34)	+.198 (5.03)	75	+.000 (.00)	-.297 (7.54)
30	-.285 (7.24)	+.198 (5.03)	76	-.114 (2.90)	-.297 (7.54)
31	-.399 (10.13)	+.198 (5.03)	77	-.228 (5.79)	-.297 (7.54)
32	-.513 (13.03)	+.198 (5.03)	78	-.342 (8.69)	-.297 (7.54)
33	+.456 (11.58)	+.099 (2.51)	79	-.456 (11.58)	-.297 (7.54)
34	+.342 (8.69)	+.099 (2.51)	80	+.399 (10.13)	-.396 (10.06)
35	+.228 (5.79)	+.099 (2.51)	81	+.285 (7.24)	-.396 (10.06)
36	+.114 (2.90)	+.099 (2.51)	82	+.171 (4.34)	-.396 (10.06)
37	+.000 (.00)	+.099 (2.51)	83	+.057 (1.45)	-.396 (10.06)
38	-.114 (2.90)	+.099 (2.51)	84	-.057 (1.45)	-.396 (10.06)
39	-.228 (5.79)	+.099 (2.51)	85	-.171 (4.34)	-.396 (10.06)
40	-.342 (8.69)	+.099 (2.51)	86	-.285 (7.24)	-.396 (10.06)
41	-.456 (11.58)	+.099 (2.51)	87	-.399 (10.13)	-.396 (10.06)
42	+.513 (13.03)	+.000 (.00)	88	+.228 (5.79)	-.495 (12.57)
43	+.399 (10.13)	+.000 (.00)	89	+.114 (2.90)	-.495 (12.57)

FIGURE 8. Insert arrangement shell size 25 – Continued.

Downloaded from http://www.everyspec.com

Contacts					
Contact position ID	Location		Contact position ID	Location	
	X-axis (mm)	Y-axis (mm)		X-axis (mm)	Y-axis (mm)
44	+.285 (7.24)	+.000 (.00)	90	+.000 (.00)	-.495 (12.57)
45	+.171 (4.34)	+.000 (.00)	91	-.114 (2.90)	-.495 (12.57)
46	+.057 (1.45)	+.000 (.00)	92	-.228 (5.79)	-.495 (12.57)

Shell size designator	Arrangement number	Shell size	Number of contacts	Size contacts	Service rating	Contact location
G	1	25	92	20	A	All

FIGURE 8. Insert arrangement shell size 25 – Continued.

Downloaded from http://www.everyspec.com

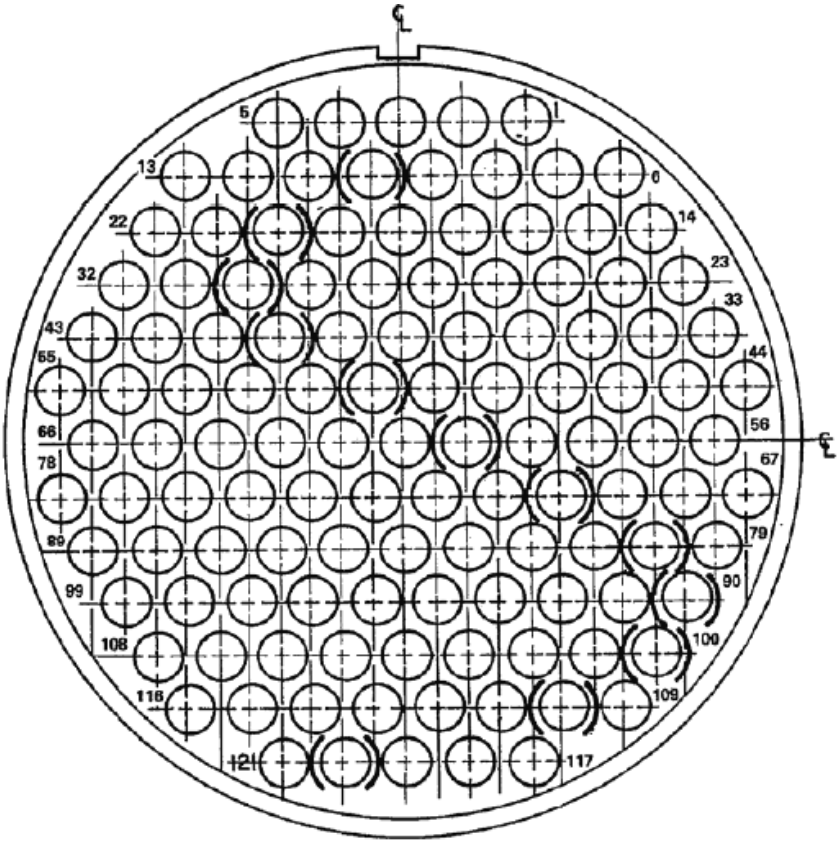

Contacts					
Contact position ID	Location		Contact position ID	Location	
	X-axis (mm)	Y-axis (mm)		X-axis (mm)	Y-axis (mm)
1	+.228 (5.79)	+.594 (15.09)	62	-.114 (2.90)	+.000 (.00)
2	+.114 (2.90)	+.594 (15.09)	63	-.228 (5.79)	+.000 (.00)
3	+.000 (.00)	+.594 (15.09)	64	-.342 (8.69)	+.000 (.00)
4	-.114 (2.90)	+.594 (15.09)	65	-.456 (11.58)	+.000 (.00)
5	-.228 (5.79)	+.594 (15.09)	66	-.570 (14.48)	+.000 (.00)
6	+.399 (10.13)	+.495 (12.57)	67	+.627 (15.93)	-.099 (2.51)
7	+.285 (7.24)	+.495 (12.57)	68	+.513 (13.03)	-.099 (2.51)
8	+.171 (4.34)	+.495 (12.57)	69	+.399 (10.13)	-.099 (2.51)
9	+.057 (1.45)	+.495 (12.57)	70	+.285 (7.24)	-.099 (2.51)
10	-.057 (1.45)	+.495 (12.57)	71	+.171 (4.34)	-.099 (2.51)

FIGURE 9. Insert arrangement shell size 29.

Downloaded from http://www.everyspec.com

Contacts					
Contact position ID	Location		Contact position ID	Location	
	X-axis (mm)	Y-axis (mm)		X-axis (mm)	Y-axis (mm)
11	-.171 (4.34)	+.495 (12.57)	72	+.057 (1.45)	-.099 (2.51)
12	+.285 (7.24)	+.495 (12.57)	73	-.057 (1.45)	-.099 (2.51)
13	+.399 (10.13)	+.495 (12.57)	74	-.171 (4.34)	-.099 (2.51)
14	+.456 (11.58)	+.396 (10.06)	75	+.285 (7.24)	-.099 (2.51)
15	+.342 (8.69)	+.396 (10.06)	76	+.399 (10.13)	-.099 (2.51)
16	+.228 (5.79)	+.396 (10.06)	77	-.513 (13.03)	-.099 (2.51)
17	+.114 (2.90)	+.396 (10.06)	78	-.627 (15.93)	-.099 (2.51)
18	+.000 (.00)	+.396 (10.06)	79	+.570 (14.48)	-.198 (5.03)
19	-.114 (2.90)	+.396 (10.06)	80	+.456 (11.58)	-.198 (5.03)
20	-.228 (5.79)	+.396 (10.06)	81	+.342 (8.69)	-.198 (5.03)
21	-.342 (8.69)	+.396 (10.06)	82	+.228 (5.79)	-.198 (5.03)
22	-.456 (11.58)	+.396 (10.06)	83	+.114 (2.90)	-.198 (5.03)
23	+.513 (13.03)	+.297 (7.54)	84	+.000 (.00)	-.198 (5.03)
24	+.399 (10.13)	+.297 (7.54)	85	-.114 (2.90)	-.198 (5.03)
25	+.285 (7.24)	+.297 (7.54)	86	-.228 (5.79)	-.198 (5.03)
26	+.171 (4.34)	+.297 (7.54)	87	-.342 (8.69)	-.198 (5.03)
27	+.057 (1.45)	+.297 (7.54)	88	-.456 (11.58)	-.198 (5.03)
28	-.057 (1.45)	+.297 (7.54)	89	-.570 (14.48)	-.198 (5.03)
29	-.171 (4.34)	+.297 (7.54)	90	+.513 (13.03)	-.297 (7.54)
30	+.285 (7.24)	+.297 (7.54)	91	+.399 (10.13)	-.297 (7.54)
31	+.399 (10.13)	+.297 (7.54)	92	+.285 (7.24)	-.297 (7.54)
32	-.513 (13.03)	+.297 (7.54)	93	+.171 (4.34)	-.297 (7.54)
33	+.570 (14.48)	+.198 (5.03)	94	+.057 (1.45)	-.297 (7.54)
34	+.456 (11.58)	+.198 (5.03)	95	-.057 (1.45)	-.297 (7.54)
35	+.342 (8.69)	+.198 (5.03)	96	-.171 (4.34)	-.297 (7.54)
36	+.228 (5.79)	+.198 (5.03)	97	+.285 (7.24)	-.297 (7.54)
37	+.114 (2.90)	+.198 (5.03)	98	+.399 (10.13)	-.297 (7.54)
38	+.000 (.00)	+.198 (5.03)	99	-.513 (13.03)	-.297 (7.54)
39	-.114 (2.90)	+.198 (5.03)	100	+.456 (11.58)	-.396 (10.06)
40	-.228 (5.79)	+.198 (5.03)	101	+.342 (8.69)	-.396 (10.06)
41	-.342 (8.69)	+.198 (5.03)	102	+.228 (5.79)	-.396 (10.06)
42	-.456 (11.58)	+.198 (5.03)	103	+.114 (2.90)	-.396 (10.06)
43	-.570 (14.48)	+.198 (5.03)	104	+.000 (.00)	-.396 (10.06)

FIGURE 9. Insert arrangement shell size 29 – Continued.

Downloaded from http://www.everyspec.com

Contacts					
Contact position ID	Location		Contact position ID	Location	
	X-axis (mm)	Y-axis (mm)		X-axis (mm)	Y-axis (mm)
44	+.627 (15.93)	+.099 (2.51)	105	-.114 (2.90)	-.396 (10.06)
45	+.513 (13.03)	+.099 (2.51)	106	-.228 (5.79)	-.396 (10.06)
46	+.399 (10.13)	+.099 (2.51)	107	-.342 (8.69)	-.396 (10.06)
47	+.285 (7.24)	+.099 (2.51)	108	-.456 (11.58)	-.396 (10.06)
48	+.171 (4.34)	+.099 (2.51)	109	+.399 (10.13)	-.495 (12.57)
49	+.057 (1.45)	+.099 (2.51)	110	+.285 (7.24)	-.495 (12.57)
50	-.057 (1.45)	+.099 (2.51)	111	+.171 (4.34)	-.495 (12.57)
51	-.171 (4.34)	+.099 (2.51)	112	+.057 (1.45)	-.495 (12.57)
52	+.285 (7.24)	+.099 (2.51)	113	-.057 (1.45)	-.495 (12.57)
53	+.399 (10.13)	+.099 (2.51)	114	-.171 (4.34)	-.495 (12.57)
54	-.513 (13.03)	+.099 (2.51)	115	+.285 (7.24)	-.495 (12.57)
55	-.627 (15.93)	+.099 (2.51)	116	+.399 (10.13)	-.495 (12.57)
56	+.570 (14.48)	+.000 (.00)	117	+.228 (5.79)	-.594 (15.09)
57	+.456 (11.58)	+.000 (.00)	118	+.114 (2.90)	-.594 (15.09)
58	+.342 (8.69)	+.000 (.00)	119	+.000 (.00)	-.594 (15.09)
59	+.228 (5.79)	+.000 (.00)	120	-.114 (2.90)	-.594 (15.09)
60	+.114 (2.90)	+.000 (.00)	121	-.228 (5.79)	-.594 (15.09)
61	+.000 (.00)	+.000 (.00)			

Shell size designator	Arrangement number	Shell size	Number of contacts	Size contacts	Service rating	Contact location
H	1	29	121	20	A	All

FIGURE 9. Insert arrangement shell size 29 – Continued.

Downloaded from http://www.everyspec.com

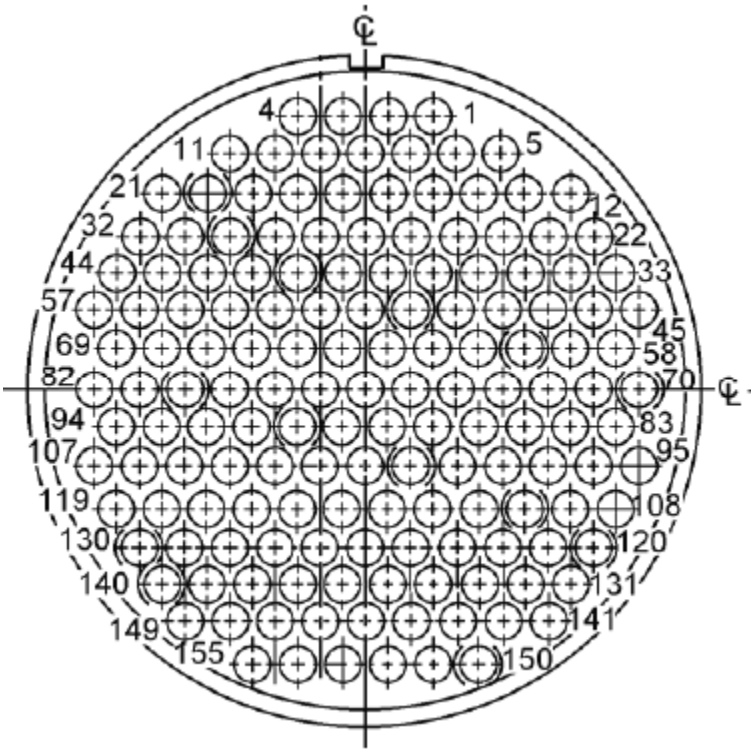

Contacts					
Contact position ID	Location		Contact position ID	Location	
	X-axis (mm)	Y-axis (mm)		X-axis (mm)	Y-axis (mm)
1	+.171 (4.34)	+.710 (18.03)	79	-.342 (8.69)	+.017 (.43)
2	+.057 (1.45)	+.710 (18.03)	80	-.456 (11.58)	+.017 (.43)
3	-.057 (1.45)	+.710 (18.03)	81	-.570 (14.48)	+.017 (.43)
4	-.171 (4.34)	+.710 (18.03)	82	-.684 (17.37)	+.017 (.43)
5	+.342 (8.69)	+.611 (15.52)	83	+.627 (15.93)	-.082 (2.08)
6	+.228 (5.79)	+.611 (15.52)	84	+.513 (13.03)	-.082 (2.08)
7	+.114 (2.90)	+.611 (15.52)	85	+.399 (10.13)	-.082 (2.08)
8	+.000 (.00)	+.611 (15.52)	86	+.285 (7.24)	-.082 (2.08)
9	-.114 (2.90)	+.611 (15.52)	87	+.171 (4.34)	-.082 (2.08)
10	-.228 (5.79)	+.611 (15.52)	88	+.057 (1.45)	-.082 (2.08)

FIGURE 10. Insert arrangement shell size 33.

Downloaded from http://www.everyspec.com

Contacts					
Contact position ID	Location		Contact position ID	Location	
	X-axis (mm)	Y-axis (mm)		X-axis (mm)	Y-axis (mm)
11	-.342 (8.69)	+.611 (15.52)	89	-.057 (1.45)	-.082 (2.08)
12	+.513 (13.03)	+.512 (13.00)	90	-.171 (4.34)	-.082 (2.08)
13	+.399 (10.13)	+.512 (13.00)	91	-.285 (7.24)	-.082 (2.08)
14	+.285 (7.24)	+.512 (13.00)	92	-.399 (10.13)	-.082 (2.08)
15	+.171 (4.34)	+.512 (13.00)	93	-.513 (13.03)	-.082 (2.08)
16	+.057 (1.45)	+.512 (13.00)	94	-.627 (15.93)	-.082 (2.08)
17	-.057 (1.45)	+.512 (13.00)	95	+.684 (17.37)	-.181 (4.60)
18	-.171 (4.34)	+.512 (13.00)	96	+.570 (14.48)	-.181 (4.60)
19	-.285 (7.24)	+.512 (13.00)	97	+.456 (11.58)	-.181 (4.60)
20	-.399 (10.13)	+.512 (13.00)	98	+.342 (8.69)	-.181 (4.60)
21	-.513 (13.03)	+.512 (13.00)	99	+.228 (5.79)	-.181 (4.60)
22	+.570 (14.48)	+.413 (10.49)	100	+.114 (2.90)	-.181 (4.60)
23	+.456 (11.58)	+.413 (10.49)	101	+.000 (.00)	-.181 (4.60)
24	+.342 (8.69)	+.413 (10.49)	102	-.114 (2.90)	-.181 (4.60)
25	+.228 (5.79)	+.413 (10.49)	103	-.228 (5.79)	-.181 (4.60)
26	+.114 (2.90)	+.413 (10.49)	104	-.342 (8.69)	-.181 (4.60)
27	+.000 (.00)	+.413 (10.49)	105	-.456 (11.58)	-.181 (4.60)
28	-.114 (2.90)	+.413 (10.49)	106	-.570 (14.48)	-.181 (4.60)
29	-.228 (5.79)	+.413 (10.49)	107	-.684 (17.37)	-.181 (4.60)
30	-.342 (8.69)	+.413 (10.49)	108	+.627 (15.93)	-.280 (7.11)
31	-.456 (11.58)	+.413 (10.49)	109	+.513 (13.03)	-.280 (7.11)
32	-.570 (14.48)	+.413 (10.49)	110	+.399 (10.13)	-.280 (7.11)
33	+.627 (15.93)	+.314 (7.98)	111	+.285 (7.24)	-.280 (7.11)
34	+.513 (13.03)	+.314 (7.98)	112	+.171 (4.34)	-.280 (7.11)
35	+.399 (10.13)	+.314 (7.98)	113	+.057 (1.45)	-.280 (7.11)
36	+.285 (7.24)	+.314 (7.98)	114	-.057 (1.45)	-.280 (7.11)
37	+.171 (4.34)	+.314 (7.98)	115	-.171 (4.34)	-.280 (7.11)
38	+.057 (1.45)	+.314 (7.98)	116	-.285 (7.24)	-.280 (7.11)
39	-.057 (1.45)	+.314 (7.98)	117	-.399 (10.13)	-.280 (7.11)
40	-.171 (4.34)	+.314 (7.98)	118	-.513 (13.03)	-.280 (7.11)
41	-.285 (7.24)	+.314 (7.98)	119	-.627 (15.93)	-.280 (7.11)
42	-.399 (10.13)	+.314 (7.98)	120	+.570 (14.48)	-.379 (9.63)
43	-.513 (13.03)	+.314 (7.98)	121	+.456 (11.58)	-.379 (9.63)

FIGURE 10. Insert arrangement shell size 33 – Continued.

Downloaded from http://www.everyspec.com

Contacts					
Contact position ID	Location		Contact position ID	Location	
	X-axis (mm)	Y-axis (mm)		X-axis (mm)	Y-axis (mm)
44	-.627 (15.93)	+.314 (7.98)	122	+.342 (8.69)	-.379 (9.63)
45	+.684 (17.37)	+.215 (5.46)	123	+.228 (5.79)	-.379 (9.63)
46	+.570 (14.48)	+.215 (5.46)	124	+.114 (2.90)	-.379 (9.63)
47	+.456 (11.58)	+.215 (5.46)	125	+.000 (.00)	-.379 (9.63)
48	+.342 (8.69)	+.215 (5.46)	126	-.114 (2.90)	-.379 (9.63)
49	+.228 (5.79)	+.215 (5.46)	127	-.228 (5.79)	-.379 (9.63)
50	+.114 (2.90)	+.215 (5.46)	128	-.342 (8.69)	-.379 (9.63)
51	+.000 (.00)	+.215 (5.46)	129	-.456 (11.58)	-.379 (9.63)
52	-.114 (2.90)	+.215 (5.46)	130	-.570 (14.48)	-.379 (9.63)
53	-.228 (5.79)	+.215 (5.46)	131	+.513 (13.03)	-.478 (12.14)
54	-.342 (8.69)	+.215 (5.46)	132	+.399 (10.13)	-.478 (12.14)
55	-.456 (11.58)	+.215 (5.46)	133	+.285 (7.24)	-.478 (12.14)
56	-.570 (14.48)	+.215 (5.46)	134	+.171 (4.34)	-.478 (12.14)
57	-.684 (17.37)	+.215 (5.46)	135	+.057 (1.45)	-.478 (12.14)
58	+.627 (15.93)	+.116 (2.95)	136	-.057 (1.45)	-.478 (12.14)
59	+.513 (13.03)	+.116 (2.95)	137	-.171 (4.34)	-.478 (12.14)
60	+.399 (10.13)	+.116 (2.95)	138	-.285 (7.24)	-.478 (12.14)
61	+.285 (7.24)	+.116 (2.95)	139	-.399 (10.13)	-.478 (12.14)
62	+.171 (4.34)	+.116 (2.95)	140	-.513 (13.03)	-.478 (12.14)
63	+.057 (1.45)	+.116 (2.95)	141	+.456 (11.58)	-.577 (14.66)
64	-.057 (1.45)	+.116 (2.95)	142	+.342 (8.69)	-.577 (14.66)
65	-.171 (4.34)	+.116 (2.95)	143	+.228 (5.79)	-.577 (14.66)
66	-.285 (7.24)	+.116 (2.95)	144	+.114 (2.90)	-.577 (14.66)
67	-.399 (10.13)	+.116 (2.95)	145	+.000 (.00)	-.577 (14.66)
68	-.513 (13.03)	+.116 (2.95)	146	-.114 (2.90)	-.577 (14.66)
69	-.627 (15.93)	+.116 (2.95)	147	-.228 (5.79)	-.577 (14.66)
70	+.684 (17.37)	+.017 (.43)	148	-.342 (8.69)	-.577 (14.66)
71	+.570 (14.48)	+.017 (.43)	149	-.456 (11.58)	-.577 (14.66)
72	+.456 (11.58)	+.017 (.43)	150	+.285 (7.24)	-.676 (17.17)

FIGURE 10. Insert arrangement shell size 33 – Continued.

Downloaded from http://www.everyspec.com

Contacts					
Contact position ID	Location		Contact position ID	Location	
	X-axis (mm)	Y-axis (mm)		X-axis (mm)	Y-axis (mm)
73	+.342 (8.69)	+.017 (.43)	151	+.171 (4.34)	-.676 (17.17)
74	+.228 (5.79)	+.017 (.43)	152	+.057 (1.45)	-.676 (17.17)
75	+.114 (2.90)	+.017 (.43)	153	-.057 (1.45)	-.676 (17.17)
76	+.000 (.00)	+.017 (.43)	154	-.171 (4.34)	-.676 (17.17)
77	-.114 (2.90)	+.017 (.43)	155	-.285 (7.24)	-.676 (17.17)
78	-.228 (5.79)	+.017 (.43)			

Shell size designator	Arrangement number	Shell size	Number of contacts	Size contacts	Service rating	Contact location
J	1	33	155	20	A	All

FIGURE 10. Insert arrangement shell size 33 – Continued.

Downloaded from http://www.everyspec.com

CONCLUDING MATERIAL

Custodians:
Navy - EC
DLA - CC

Preparing activity:
DLA - CC

(Project 5935-2009-037)

NOTE: The activities listed above were interested in this document as of the date of this document. Since organizations and responsibilities can change, you should verify the currency of the information above using the ASSIST Online database at http://assist.daps.dla.mil.