Downloaded from http://www.everyspec.com

MILITARY STANDARD

INSERT ARRANGEMENTS FOR MIL-C-38999
AND MIL-C-27599 ELECTRICAL,
CIRCULAR CONNECTORS

TO ALL HOLDERS OF MIL-STD-1560A:

1. THE FOLLOWING PAGES OF MIL-STD-1560A HAVE BEEN REVISED AND SUPERSEDE THE PAGES LISTED:

NEW PAGE	DATE	SUPERSEDED PAGE	DATE
107.3	1 December 1975	(REPRINTED WITHOUT CHANGE)	
107.4	15 June 1984	107.4	1 December 1975
109.7	1 December 1975	(REPRINT WITH0UT CHANGE)	
109.8	15 June 1984	109.8	20 November 1981
202.1	1 December 1975	(REPRINT WITHOUT CHANGE)	
202.2	15 June 1984	202.2	1 December 1975

2. RETAIN THIS NOTICE AND INSERT BEFORE TABLE OF CONTENTS.

3. Holders of MIL-STD-1560A will verify that page changes and additions indicated above have been entered. This notice page will be retained as a check sheet. This issuance, together with apended pages, is a separate publication. Each notice is to be retained by stocking points until the Military Standard is completely revised or canceled.

Custodians:
Army - CR
Navy - AS
Air Force - 85

Review activities:
Army -AR, MI
Navy - EC, MS, OS
Air Force - 11, 15, 17, 99
DLA - ES

Preparing activity:
Air Force - 85

(project 5935-3389)

Downloaded from http://www.everyspec.com

Downloaded from http://www.everyspec.com

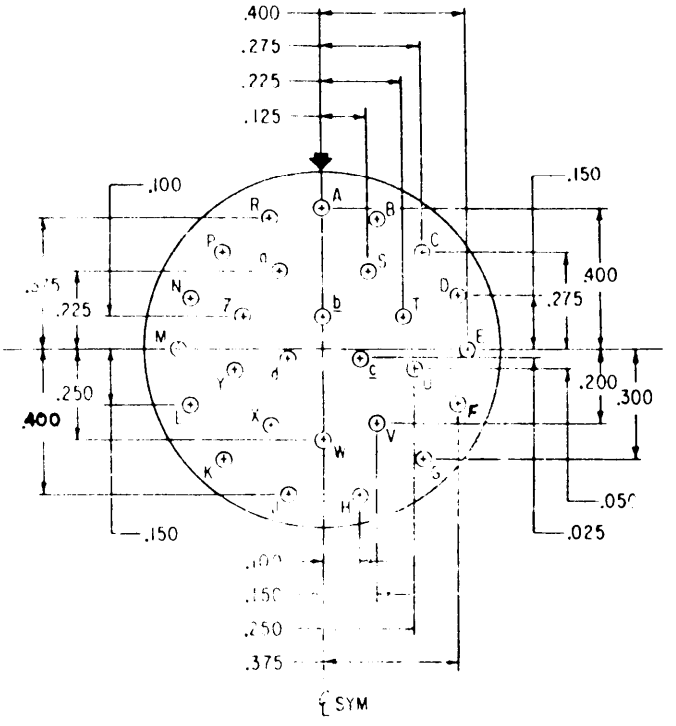

INCHES	MM	INCHES	MM
.025	.64	.200	5.08
.075	1.91	.250	6.35
.100	2.54	.300	7.62
.150	3.81	.350	8.89
.175	4.45	.375	9.53
		.400	10.16

Shell size	Arrange-ment No.	Number of contacts	Size contacts	Service rating	Contact location	Supersedes document
21	-27	27	20	I	All	MS20055-27

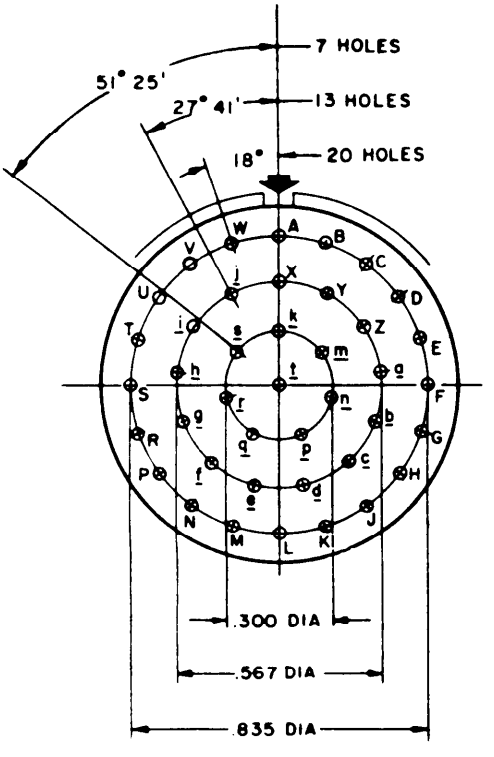

INCHES	MM
.300	7.62
.567	14.40
.835	21.21

Shell size	Arrange-ment No.	Number of contacts	Size contacts
21	-41	41	20

Service rating	Contact location	Supersedes document
I	All	MS20055-41

Downloaded from http://www.everyspec.com

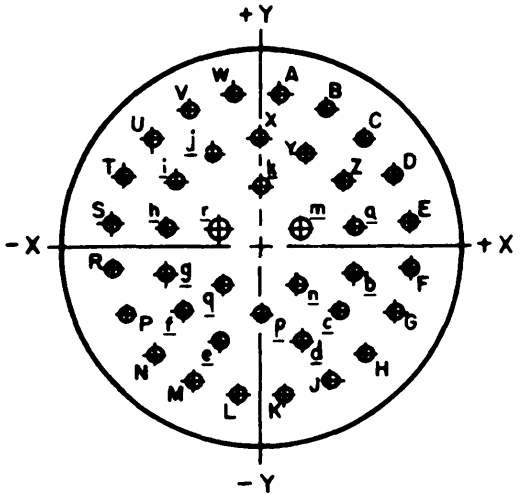

CONTACT LOCATION					
CONTACT LETTER	LOCATION X AXIS	LOCATION Y AXIS	CONTACT LETTER	LOCATION X AXIS	LOCATION Y AXIS
A	+.065	+.411	X	.000	+.295
B	+.189	+.371	Y	+.126	+.256
C	+.294	+.294	Z	+.232	+.179
D	+.371	+.189	a	+.280	+.057
E	+.411	+.065	b	+.280	-.074
F	+.411	-.065	c	+.217	-.189
G	+.371	-.189	d	+.112	-.265
H	+.294	-.294	e	-.112	-.265
J	+.189	-.371	f	-.217	-.189
K	+.065	-.411	g	-.280	-.074
L	-.065	-.411	h	-.280	+.057
M	-.189	-.371	i	-.232	+.179
N	-.294	-.294	j	-.126	+.256
P	-.371	-.189	k	.000	+.164
R	-.411	-.065	m	+.114	+.048
S	-.411	+.065	n	+.106	-.107
T	-.371	+.189	p	.000	-.189
U	-.294	+.294	q	-.106	-.107
V	-.189	+.371	r	-.114	+.048
W	-.065	+.411			

INCHES	MM	INCHES	MM	INCHES	MM
.048	1.22	.114	2.90	.256	6.50
.057	1.45	.126	3.20	.265	6.73
.065	1.65	.164	4.17	.280	7.11
.074	1.88	.179	4.55	.294	7.47
.106	2.69	.189	4.80	.295	7.49
.107	2.72	.217	5.51	.371	9.42
.112	2.84	.232	5.89	.411	10.44

Shell size	Arrangement No.	Number of contacts	Size contacts	Service rating	Contact location	Supersedes document
21	-39	2	16	I	r,m	MS20055-39
		37	20		All others	

SECTION 107A
Supersedes page 107.4 of 1 December 1975.

Downloaded from http://www.everyspec.com

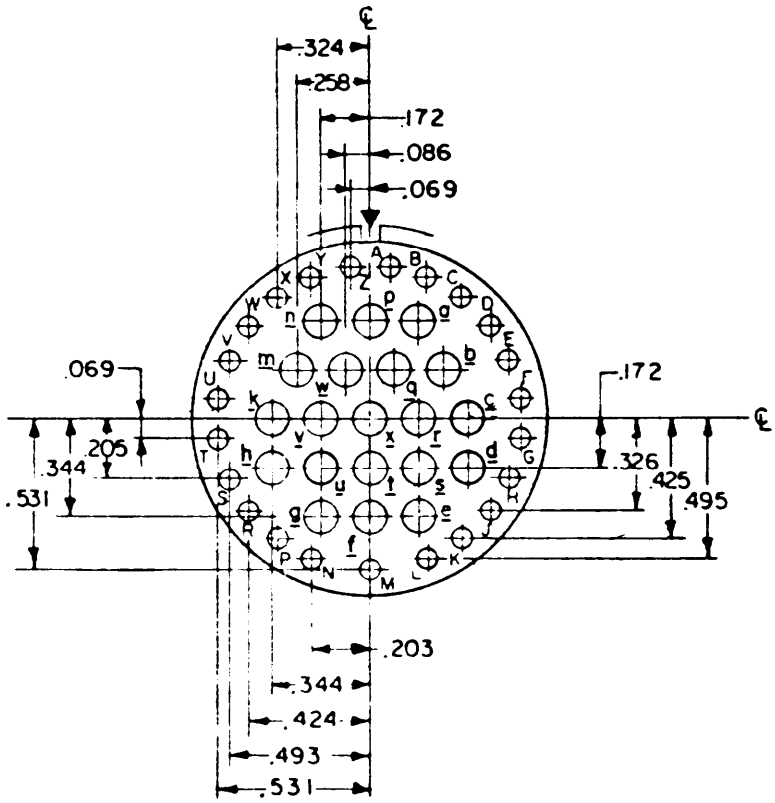

INCHES	MM	INCHES	MM
.069	1.75	.326	8.28
.086	2.18	.344	8.78
.172	4.37	.424	10.77
.203	5.16	.425	10.80
.205	5.21	.493	12.52
.258	6.55	.495	12.57
.324	8.23	.531	13.49

Shell size	Arrangement No.	Number of contacts	Size contacts	Service rating	Contact location	Supersedes document
25	-43	20	16	I	a,b,c,d,e, f,g,h,k,m, n,p,q,r,s,t, u,v,w,x	MS20057-43
		23	20		All others	

Downloaded from http://www.everyspec.com

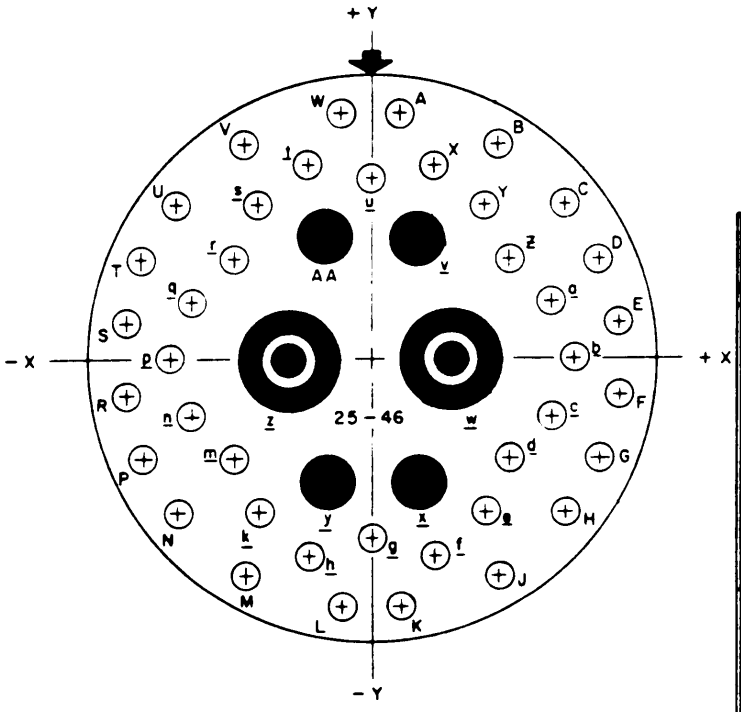

CONTACT LOCATION					
CONTACT LETTER	LOCATION X AXIS	LOCATION Y AXIS	CONTACT LETTER	LOCATION X AXIS	LOCATION Y AXIS
A	+.065	+.533	a	+.404	+.125
B	+.275	+.466	b	+.437	.000
C	+.420	+.337	c	+.404	-.125
D	+.490	+.227	d	+.314	-.221
E	+.531	+.093	e	+.245	-.337
F	+.531	-.093	f	+.136	-.424
G	+.490	-.227	g	.000	-.395
H	+.420	-.337	h	-.136	-.424
J	+.275	-.466	k	-.245	-.337
K	+.065	-.533	m	-.314	-.221
L	-.065	-.533	n	-.404	-.125
M	-.275	-.466	p	-.437	.000
N	-.420	-.337	q	-.404	+.125
P	-.490	-.227	r	-.314	+.221
R	-.531	-.093	s	-.245	+.337
S	-.531	+.093	t	-.136	+.424
T	-.490	+.227	u	.000	+.395
U	-.420	+.337	v	+.097	+.265
V	-.275	+.466	w	+.180	.000
W	-.065	+.533	x	+.097	-.265
X	+.136	+.424	y	-.097	-.265
Y	+.245	+.337	z	-.180	.000
Z	+.314	+.221	AA	-.097	+.265

INCHES	MM	INCHES	MM	INCHES	MM
.065	1.65	.227	5.77	.420	10.67
.093	2.36	.245	6.22	.424	10.77
.097	2.46	.265	6.73	.437	11.10
.125	3.18	.275	6.99	.466	11.84
.136	3.45	.314	7.98	.490	12.45
.180	4.57	.337	8.56	.531	13.49
.221	5.61	.395	10.03	.533	13.54
		.404	10.26		

Shell size	Arrange-ment No.	Number of contacts	Size contacts	Service rating	Contact location	Supersedes document
25	-46	2	No. 8 COAX	COAX	z,w	MS20057-46
		4	16	I	AA,v x,y	
		40	20		All others	

Downloaded from http://www.everyspec.com

SECTION 202

INSERT ARRANGEMENT, ELECTRICAL CONNECTOR

SHELL SIZE 10

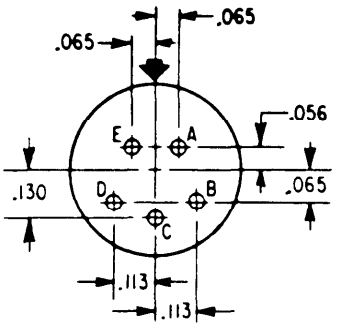

INCHES	MM
.056	1.42
.065	1.65
.113	2.87
.130	3.30

Shell size	Arrange-ment No.	Number of contacts	Size contacts	Service rating	Contact location	Supersedes document
10	-5	5	20	I	All	MS27344-5

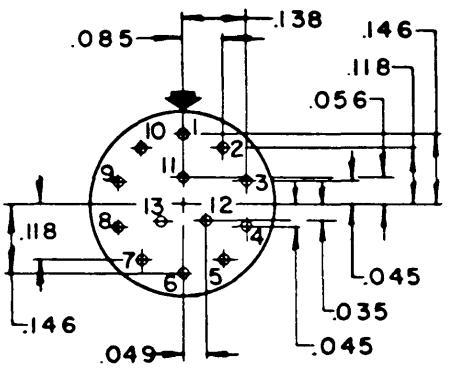

INCHES	MM	INCHES	MM
.035	.89	.085	2.16
.045	1.14	.118	3.00
.049	1.24	.138	3.51
.056	1.42	.146	3.71

(Inactive for new design for MIL-C-38999.)

Shell size	Arrange-ment No.	Number of contacts	Size contacts	Service rating	Contact location	Supersedes document
10	-13	13	22M	M	All	MS27344-13

Downloaded from http://www.everyspec.com

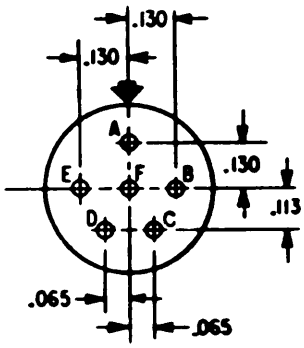

INCHES	MM
.065	1.65
.113	2.87
.130	3.30

Shell size	Arrange-ment No.	Number of contacts	Size contacts	Service rating	Contact location	Supersedes document
10	-98	6	20	I	All	MS27344-98

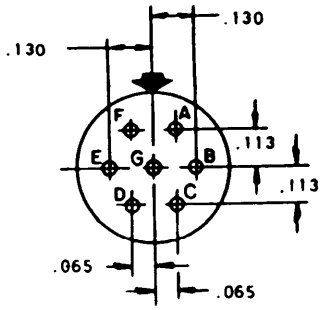

INCHES	MM
.065	1.65
.113	2.87
.130	3.30

Shell size	Arrange-ment No.	Number of contacts	Size contacts	Service rating	Contact location	Supersedes document
10	-99	7	20	I	All	MS27344-99

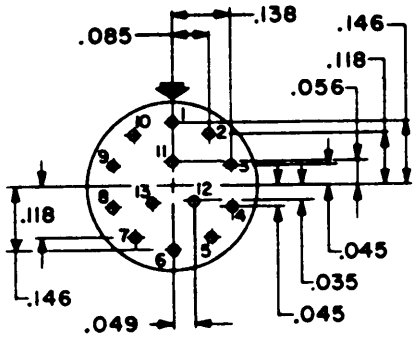

INCHES	MM	INCHES	MM
.035	.89	.085	2.16
.045	1.14	.118	3.00
.049	1.24	.138	3.51
.056	1.42	.146	3.71

(Applicable to MIL-C-38999 only.)

Shell size	Arrange-ment No.	Number of contacts	Size contacts	Service rating	Contact location	Supersedes document
10	-35	13	22D	M	All	MS27517-35

☆U.S. GOVERNMENT PRINTING OFFICE: 1984 — 706-040/A3128