MILITARY STANDARD

MIL-STD-1386-20
(NAVY)

10 NOVEMBER 1972

LOADING OF HAZARDOUS MATERIALS AND ASSOCIATED ITEMS IN MILVAN CONTAINERS

ROCKET LAUNCHER, LAU-69/A
DOMESTIC UNIT LOAD

UNIT LOAD DATA

UNIT LOAD DRAWING	WR-53/839
DIMENSIONS	65 3/4 L x 37 3/4 W x 44 7/8 H
CUBE	64.5 CU FT
OTHER	SEE TABLE I

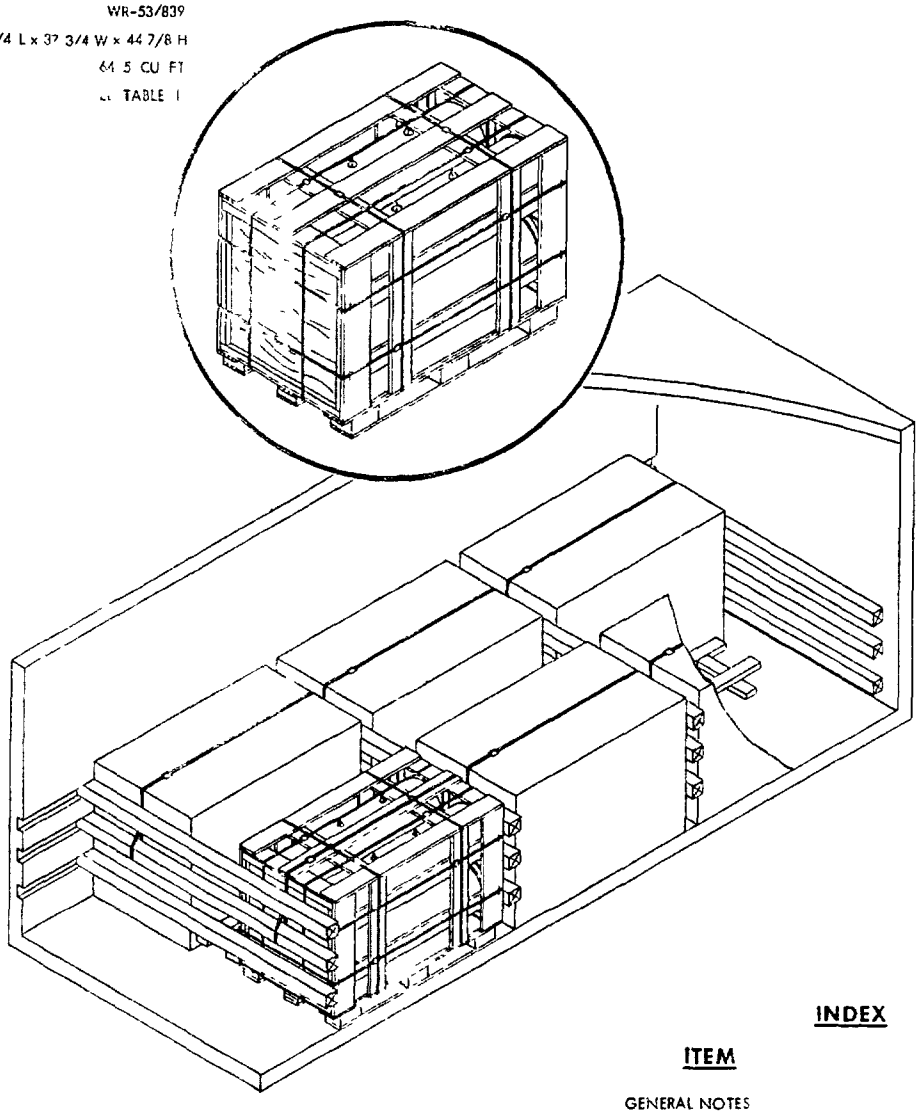

INDEX

NOTES

1. UNLESS OTHERWISE SPECIFIED DIMENSIONS ARE IN INCHES
2. FOR CROSS REFERENCE TO ASSOCIATED PALLETIZING, TRUCK LOADING AND CARLOADING MILITARY STANDARDS, REFER TO THE INDEX TO STANDARDS, MIL-HDBK-236

AUTHORIZED FOR TRAILER-ON-FLAT CAR (TOFC), CONTAINER ON-FLAT CAR (COFC), CONTAINERSHIP AND HIGHWAY SHIPMENTS	APPROVED BY US COAST GUARD	APPROVED BY BUREAU OF EXPLOSIVES
	R B Chewing CAPT USCG	A G Grannick
	DATE 10 November 1972	DATE 10/31/72
NAVAL TECHNICAL DATA MANAGEMENT AGENT (TDA) — DATE	ORIGINATOR — L R Caring, SIGNATURE	NAVAL WEAPONS HANDLING LABORATORY

GENERAL NOTES

1. THIS DOCUMENT GIVES DETAILED INSTRUCTIONS FOR LOADING THE MILVAN CONTAINER WITH DOMESTIC UNIT LOADS OF ROCKET LAUNCHERS, LAU-69/A THE LAUNCHERS SHALL BE PALLETIZED IN ACCORDANCE WITH WP-53/839
   [illegible] SHALL BE EQUIPPED WITH A MECHANICAL LOAD-BRACING SYSTEM THAT MEETS THE REQUIREMENTS OF THE BUREAU OF EXPLOSIVES PAMPHLET 6 C
   IN ADDITION TO THE BELT RAILS REQUIRED BY PAMPHLET 6 C, THE MILVAN CONTAINER HAS BELT RAILS AT THE 72 AND 83 INCH HEIGHTS FROM THE CONTAINER FLOOR

CAUTION

WHEN POSITIONING CROSSMEMBERS MAKE A VISUAL CHECK TO INSURE THAT CROSSMEMBERS ARE LOCKED SECURELY IN PLACE

4. CONTAINERS ARE EQUIPPED WITH 25 CROSSMEMBERS UNUSED CROSSMEMBERS MUST REMAIN WITH THE CONTAINER AND SHALL BE FASTENED INTO BELT RAILS FOR SHIPMENT
5. IS DUNNAGE SPECIFIED IS OF NOMINAL SIZE FOR EXAMPLE, 1 x 4 MATERIAL IS ACTUALLY 3/4 THICK BY 3 5/8 WIDE AND 2 x 6 MATERIAL IS ACTUALLY 1 5/8 THICK BY 5 1/2 WIDE
6. WHEN THE VOID BETWEEN THE CROSSMEMBER AND THE UNIT LOAD IS GREATER THAN ONE INCH USE FILL MATERIAL TO SHIM BETWEEN CROSSMEMBER AND UNIT LOAD AS SHOWN IN DETAIL C
7. SWAY BRACE, DETAIL D, IS ASSEMBLED IN PLACE PIECE 1 IS POSITIONED INBOARD OF THE CORNER PALLET SKIDS WITH PIECES 2 AGAINST PALLET SKIDS NAIL TO PIECE 1 WITH THREE 10d NAILS PER JOINT CUT PIECE 3 TO FIT BETWEEN PIECES 2 AND NAIL TO PIECE 1 WITH THREE 10d NAILS
8. APPLICABLE MATERIAL SPECIFICATIONS
   DUNNAGE LUMBER - FED SPEC MM-L-751
   NAILS - FED SPEC FF-N-105, COMMON CEMENT COATED, ALTERNATE, ANNULAR RING OR CHEMICALEY ETCHED TYPE
   STRAPPING - FED SPEC QQ-S-781, TYPE 1, CLASS
9. AFTER BLOCKING AND BRACING HAS BEEN INSPECTED ATTACH SHIPPING DOCUMENTS INSIDE THE CONTAINER IN AN ACCESSIBLE AREA AND CLOSE AND SEAL CONTAINER DOORS

TOFC/COFC, CONTAINERSHIP AND HIGHWAY

1. THE LOADED MILVAN CONTAINER SHALL BE ON A 20-FT MILVAN CHASSIS EQUIPPED WITH DOUBLE BOGIES WHEN BEING MOVED IN TOFC SERVICE
2. WHEN THE MILVAN CONTAINER IS SHIPPED TOFC OR COFC, THE RAIL CAR SHALL COMPLY WITH THE REQUIREMENTS OF THE BUREAU OF EXPLOSIVES PAMPHLET 6 C
3. THE LOADED CONTAINER MAY BE TRANSPORTED OVER PUBLIC HIGHWAYS ON THE MILVAN CHASSIS USING THE FOLLOWING CONFIGURATIONS
   A. ONE CONTAINER ON 20-FT MILVAN CHASSIS WITH A DOUBLE BOGIE LOCATED IN THE NEXT TO LAST HOLE AND PULLED BY A SINGLE OR DOUBLE DRIVE AXLE TRAILER
   B. TWO CONTAINERS ON A 40-FT MILVAN CHASSIS WITH BOGIES LOCATED IN THE REARMOST POSITION AND PULLED BY A DOUBLE DRIVE AXLE TRAILER
4. THE LOADED CONTAINER MAY ALSO BE TRANSPORTED OVER PUBLIC HIGHWAYS USING SUITABLE COMMERCIAL EQUIPMENT OF ADEQUATE CAPACITY AND PULLED BY A DOUBLE DRIVE AXLE TRACTOR CONTAINERS MUST BE ADEQUATELY SECURED TO THE EQUIPMENT
5. THE LOADED CONTAINERS MAY BE SHIPPED TOFC/COFC WHEN SHIPPING TOFC THE FOLLOWING CONSIDERATIONS ARE AUTHORIZED
   A. ONE CONTAINER ON 20-FT MILVAN CHASSIS EQUIPPED WITH DOUBLE BOGIES
   B. TWO CONTAINERS ON 40-FT MILVAN CHASSIS EQUIPPED WITH DOUBLE BOGIES

WARNING

CHASSIS/CONTAINERS COUPLED INTO A 40-FT TRAILER CONFIGURATION MUST BE PLACED AT THE B-END OF THE TOFC RAILCAR THE REAR END OF THE 40-FT UNIT WILL OVERHANG THE END OF THE CAR IF IT IS PLACED AT THE A END 20-FT AND 40-FT UNITS CAN BE LOADED ON THE SAME CAR

TABLE I

	ROCKET MOTOR	ROCKETS
UNIT LOAD WEIGHT	1163 LBS	1563 LBS
LOAD WEIGHT	6978 LBS	9378 LBS
CONTAINER GROSS WEIGHT	12,808 LBS	15,208 LBS
DOT HAZARD CLASSIFICATION	EXPLOSIVES B	EXPLOSIVES A

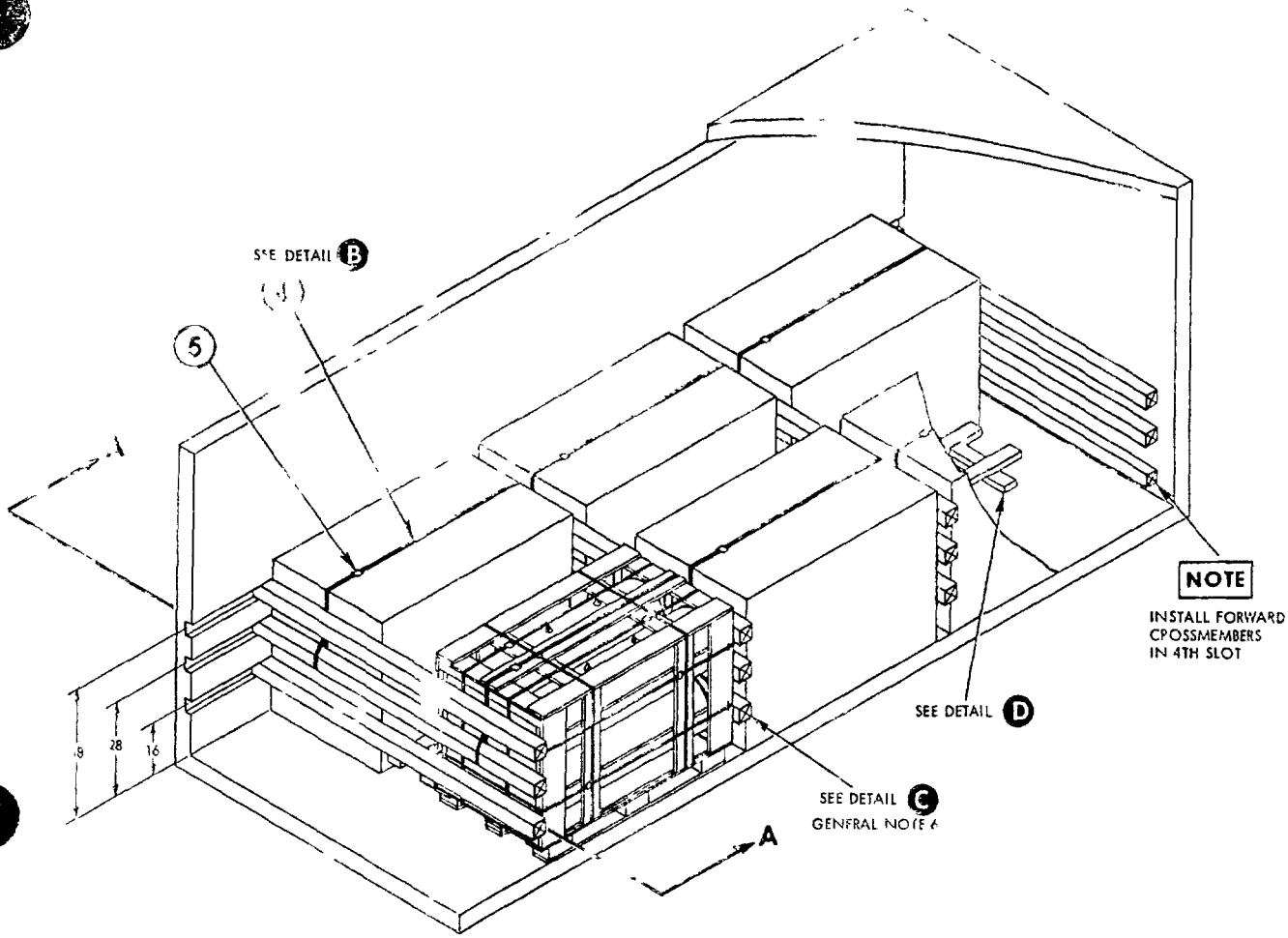

CONTAINER LOAD DATA

NUMBER OF UNIT LOADS .	6
NUMBER OF CROSSMEMBERS REQ'D	12
DUNNAGE WEIGHT . .	130 LBS
CONTAINER WEIGHT	5,785 LBS
OTHER DATA . . .	SEE TABLE I

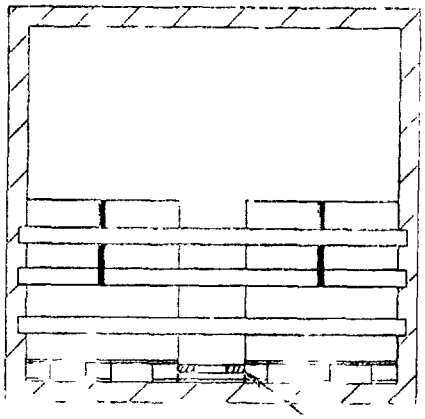

SEE DETAIL D

SECTION A A

PIECE NO.	DESCRIPTION	SIZE	NO OF PIECES REQ'D	NAIL TO	NAILS NUMBER	NAILS SIZE
5	SEAL	FOR 1 1/4 STRAP	12	-	-	-
4	STRAP	1 1/4 x .053 x	6	-	-	-
3	SPACER	2 x 4 TO SUIT	6	1	3	10d
2	STRINGER	2 x 4 x 60	6	1	3 PER JOINT	10d
1	SUPPORT	2 x 4 x 28	6	SEE 2	-	-

LIST OF MATERIALS & NAILING DATA

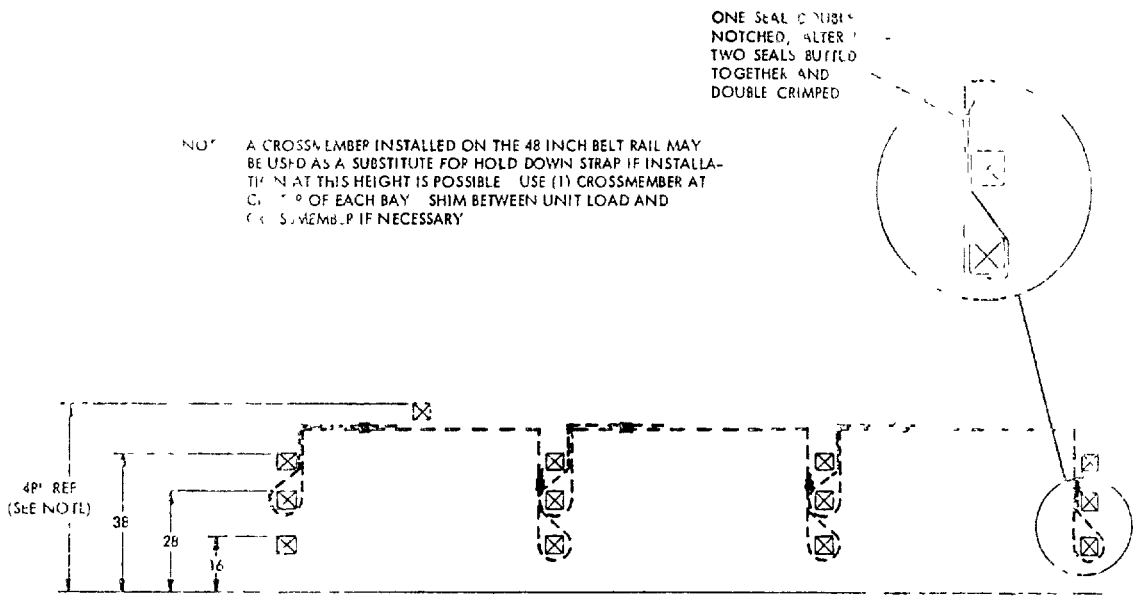

DETAIL B

STRAPPING DIAGRAM
(INDICATES ATTACHMENT POINTS FOR
HOLD DOWN STRAPPING)

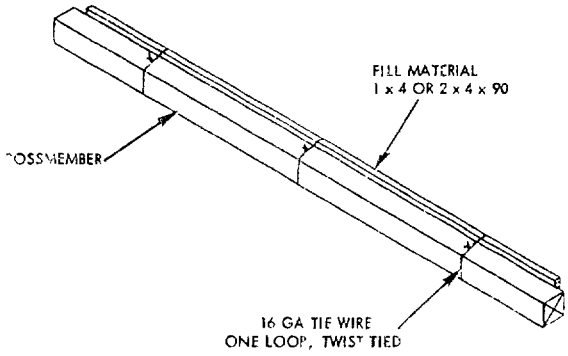

DETAIL C

FILL MATERIAL
SEE GENERAL NOTE 6

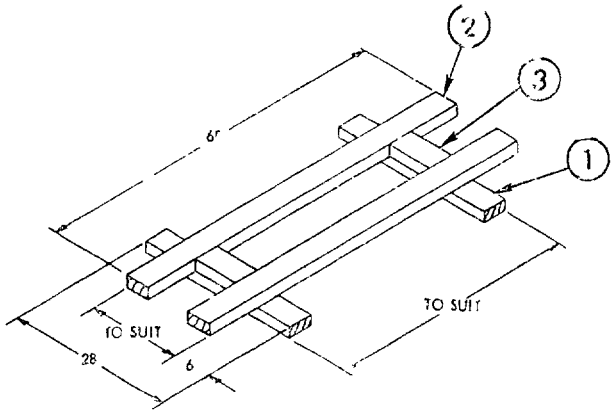

DETAIL D

WAY
3 REQUIRED