Downloaded from http://www.everyspec.com

MIL-STD-1346B
29 April 1985
SUPERSEDING
MIL-STD-1346A
13 September 1976

MILITARY STANDARD

RELAYS
SELECTION AND APPLICATION

FSC 5945

Downloaded from http://www.everyspec.com

DEPARTMENT OF DEFENSE
Washington, DC 20301

Relays, Selection and Application

MIL-STD-1346B

1. This Military Standard is approved for use by all Departments and Agencies of the Department of Defense.

2. Beneficial comments (recommendations, additions, deletions) and any pertinent data which may be of use in improving this document should be addressed to: Naval Electronic Systems Command, ATTN: ELEX 8111, Department of the Navy, Washington 20363, by using the self-addressed Standardization Document Improvement Proposal (DD Form 1426) appearing at the end of this document or by letter.

Downloaded from http://www.everyspec.com

FOREWORD

This standard provides selected standard relays for use in the design of military equipment.

Simply defined, a relay is an electrically operated switching device. A relay may be used for any of the following purposes:

a. To obtain isolation between the input circuit and the output circuit.

b. To invert the signal sense (from open to closed and vice-versa).

c. To increase the number of output circuits (so as to switch more than one load or to switch loads from different sources).

d. To repeat signals.

e. To switch loads of different voltage or current ratings.

f. To retain an input signal.

g. To interlock circuits.

h. To provide remote control.

Since misapplication is one of the major causes of relay failures, users are cautioned against using a relay in an application for which it is not rated. The application information and performance characteristics contained in this standard are offered for guidance and are not to be considered as mandatory. Users are advised to consult the Military Parts Control Advisory Group (see 8.2) to verify the capability of a relay to perform satisfactorily in an application where its suitability is questionable.

CAUTION: The use of any coil voltage less than the rated coil voltage will compromise the operation of the relays.

Downloaded from http://www.everyspec.com

CONTENTS

			Page
Paragraph	1.	SCOPE	1
	1.1	Scope	1
	1.2	Purposes of standard	1
	2.	REFERENCED DOCUMENTS	2
	2.1	Government documents	2
	2.2	Other publications	2
	2.3	Order of precedence	2
	3.	DEFINITIONS	3
	3.1	Terms	3
	4.	GENERAL REQUIREMENTS	4
	4.1	Choice of relay types	4
	4.2	Conflict of requirements	4
	4.3	Criteria for inclusion in this standard	4
	5.	DETAILED REQUIREMENTS	5
	5.1	Requirements of standard relay types	5
	6.	APPLICATION INFORMATION	6
	6.1	General	6
	6.2	Relay selection and application	6
	6.3	Relay contact configurations	11
	6.4	Relay misapplication	12
	7.	SYMBOLS	17
	7.1	Temperature class	17
	7.2	Shock	17
	7.3	Vibration characteristic	18
	7.4	Terminal	18
	7.5	Failure rate level	18
	8.	SUPPLEMENTAL INFORMATION	19
	8.1	Drawing notes	19
	8.2	Technical information	19

SECTIONS

Section	100	RELAYS, ELECTROMAGNETIC (EM), ESTABLISHED RELIABILITY (ER)	100.1
	101	DC operated	101.1
	102	AC operated	102.1
	103	Sensitive, dc operated	103.1
	104	Latching	104.1
	105	Latching, sensitive, dc operated	105.1
	106	Radio frequency (coaxial) dc operated	106.1
	200	RELAYS, HYBRID, ESTABLISHED RELIABILITY (ER)	200.1
	201	DC operated	201.1
	202	DC operated, sensitive	202.1
	300	RELAYS, ELECTROMAGNETIC (EM), GENERAL PURPOSE	300.1
	301	DC operated (MIL-R-5757)	301.1
	302	DC operated (MIL-R-6106)	302.1
	303	AC operated (MIL-R-5757)	303.1
	304	AC operated (MIL-R-6106)	304.1
	305	Sensitive, dc operated (MIL-R-5757)	305.1
	306	Latching, dc operated (MIL-R-6106)	306.1
	307	Latching, ac operated (MIL-R-6106)	307.1
	308	Latching, dc/ac operated (MIL-R-6106)	308.1

Downloaded from http://www.everyspec.com

CONTENTS - Continued

			Page
Section	400	RELAYS, SOLID STATE, FOR ELECTRONIC AND COMMUNICATION TYPE EQUIPMENT	400.1
	401	DC input	401.1
	500	RELAYS, REED	500.1
	501	Dry reed	501.1
	600	RELAYS, TIME DELAY	600.1
	601	Hybrid	601.1
	602	Solid state	602.1
	700	RELAYS, VACUUM, HIGH VOLTAGE	700.1
	701	DC coil operated	701.1

FIGURES

Figure	1A	Improper circuit design.	7
	1B	Properly designed circuit.	7
	1C	Improper circuit design.	7
	1D	Properly designed circuit.	7
	1E	Not recommended relay open ground.	7
	1F	Preferred design, two relays controlled with no adverse interaction on dropout.	7
	1G	Improper motor braking.	8
	2	Polarity reversal, form C contacts.	9
	3	Polarity reversal form K contacts.	9
	4	Concurrent relay operation, cascade method.	10
	5	Concurrent relay operation, parallel method.	11
	6	Symbols and markings for contacts and coils.	13
	101-1	Relay, EM, ER, SPDT, low level to 1 ampere (MIL-R-39016/7).	101.27
	101-2	Relay, EM, ER, SPDT, 25 amperes (MIL-R-6106/19).	101.28
	101-3	Relay, EM, ER, SPDT, 25 amperes with coil suppression (MIL-R-6106/19).	101.30
	101-4	Relay, EM, ER, SPDT, low level to 1 ampere, with internal diode for coil transient suppression (MIL-R-39016/23).	101.32
	101-5	Relay, EM, ER, SPDT, low level to 1 ampere, with internal diodes for coil transient suppression and polarity reversal protection (MIL-R-39016/24).	101.33
	101-6	Relay, EM, ER, DPDT, low level to 2 amperes (MIL-R-39016/6).	101.34
	101-7	Relay, EM, ER, DPDT, low level to 1 ampere (MIL-R-39016/9).	101.35
	101-8	Relay, EM, ER, DPDT, low level to 2 amperes (MIL-R-39016/13).	101.37
	101-9	Relay, EM, ER, DPDT, low level to 1 ampere, terminals 0.100 inch grid pattern (MIL-R-39016/17).	101.38
	101-10	Relay, EM, ER, DPDT, low level to 1 ampere (MIL-R-39016/34).	101.39
	101-11	Relay, EM, ER, DPDT, low level to 5 amperes (MIL-R-6106/27).	101.40
	101-12	Relay, EM, ER, DPDT, 10 amperes (MS27401).	101.44
	101-13	Relay, EM, ER, DPDT, low level to 5 amperes, coil suppressed (MIL-R-6106/27).	101.48
	101-14	Relay, EM, ER, DPDT, 10 amperes, coil suppressed (MS27401).	101.52
	101-15	Relay, EM, ER, DPDT, low level to 1 ampere, with internal diode for coil transient suppression (MIL-R-39016/15).	101.56
	101-16	Relay, EM, ER, DPDT, low level to 1 ampere, with internal diode for coil transient suppression, terminals 0.100-inch grid pattern (MIL-R-39016/18).	101.57

Downloaded from http://www.everyspec.com

CONTENTS - Continued

FIGURES - Continued

			Page
Figure	101-17	Relay, EM, ER, DPDT, low level to 2 amperes (0.200-inch terminal spacing) coil transient suppressed (MIL-R-39016/22). - - - - - - - - - - - - - - - - - - -	101.58
	101-18	Relay, EM, ER, DPDT, low level to 1 ampere, with internal diodes for coil transient suppression and polarity reversal protection, terminals 0.100-inch grid pattern (MIL-R-39016/19). - - - - - - - - - - - - - - - - - - -	101.59
	101-19	Relay, EM, ER, DPDT, low level to 1 ampere, with internal diode for coil transient suppression and polarity reversal protection (MIL-R-39016/20). - - - - - - - - -	101.60
	101-20	Relay, EM, ER, 3PDT, low level to 10 amperes (MIL-R-6106/29).- - - - - - - - - - - - - - - - - - - -	101.61
	101-21	Relay, EM, ER, 3PDT, 25 amperes (MS27743).- - - - - - -	101.63
	101-22	Relay, EM, ER, 3PDT, low level to 10 amperes, with coil suppression (MIL-R-6106/29).- - - - - - - - - - - - - -	101.64
	101-23	Relay, EM, ER, 3PDT, 25 amperes, with coil suppression (MS27743).- -	101.66
	101-24	Relay, EM, ER, 4PDT, low level to 1 ampere (MIL-R-39016/14). -	101.67
	101-25	Relay, EM, ER, 4PDT, low level to 2 amperes (400 milliwatts) (MIL-R-39016/39).- - - - - - - - - - - - - - - - -	101.68
	101-26	Relay, EM, ER, 4PDT, low level to 2 amperes (MIL-R-39016/40). -	101.70
	101-27	Relay, EM, ER, 4PDT, 5 amperes (MIL-R-6106/28). - - - -	101.71
	101-28	Relay, EM, ER, 4PDT, 10 amperes (MS27400).- - - - - - -	101.72
	101-29	Relay, EM, ER, 4PDT, low level to 5 amperes with coil suppression (MIL-R-6106/28).- - - - - - - - - - - - - -	101.73
	101-30	Relay, EM, ER, 4PDT, 10 amperes with coil suppression (MS27400).- -	101.75
	101-31	Relay, EM, ER, 6PDT, 10 amperes (MIL-R-6106/8). - - - -	101.77
	101-32	Relay, EM, ER, 6PDT, 10 amperes with coil suppression (MIL-R-6106/8). - - - - - - - - - - - - - - - - - - -	101.79
	101-33	Relay, EM, ER, DPDT, low level to 2 amperes with internal diode for coil transient suppression (MIL-R-39016/37). - - - - - - - - - - - - - - - - - - -	101.81
	101-34	Relay, EM, ER, DPDT, low level to 2 amperes with internal diodes for coil transient suppression and polarity reversal protection (MIL-R-39016/38). - - - - - - - - -	101.82
	102-1	Relay, EM, ER, DPDT, 10 amperes (MS27401).- - - - - - -	102.4
	102-2	Relay, EM, ER, 3PDT, 25 amperes (MS27743).- - - - - - -	102.8
	102-3	Relay, EM, ER, 4PDT, 10 amperes (MS27400).- - - - - - -	102.11
	102-4	Relay, EM, ER, 6PDT, 10 amperes (MIL-R-6106/8). - - - -	102.13
	103-1	Relay, EM, ER, SPDT, low level to 1 ampere (sensitive, 40 milliwatts) (MIL-R-39016/10).- - - - - - - - - - - -	103.13
	103-2	Relay, EM, ER, SPDT, low level to 1 ampere (sensitive, 40 milliwatts) with an internal diode for coil transient suppression (MIL-R-39016/25). - - - - - - - -	103.14
	103-3	Relay, EM, ER, SPDT, low level to 1 ampere (sensitive, 40 milliwatts) with internal diodes for coil transient suppression and polarity reversal protection (MIL-R-39016/26). - - - - - - - - - - - - - - - - - - -	103.15
	103-4	Relay, EM, ER, DPDT, low level to 1 ampere (sensitive, 60 milliwatts) (MIL-R-39016/11).- - - - - - - - - - - -	103.16
	103-5	Relay, EM, ER, DPDT, low level to 1 ampere (sensitive, 60 milliwatts) (MIL-R-39016/41).- - - - - - - - - - - -	103.17
	103-6	Relay, EM, ER, DPDT, low level to 2 amperes (sensitive 100/125 milliwatts) (MIL-R-39016/44). - - - - - - - - -	103.18
	103-7	Relay, EM, ER, DPDT, low level to 0.5 ampere, sensitive (MIL-R-39016/48). - - - - - - - - - - - - - - - - - - -	103.19
	103-8	Relay, EM, ER, DPDT, low level to 1 ampere (sensitive, 60 milliwatts) with internal diode for coil transient suppression (MIL-R-39016/16). - - - - - - - - - - - - - -	103.20

Downloaded from http://www.everyspec.com

CONTENTS - Continued

FIGURES - Continued

			Page
Figure	103-9	Relay, EM, ER, DPDT, low level to 1 ampere (sensitive, 60 milliwatts) with internal diode for coil transient suppression (MIL-R-39016/42). - - - - - - - - - - - - -	103.21
	103-10	Relay, EM, ER, DPDT, low level to 1 ampere (sensitive, 60 milliwatts) with internal diode for coil transient suppression and polarity reversal protection (MIL-R-39016/21). -	103.22
	103-11	Relay, EM, ER, DPDT, low level to 1 ampere (sensitive, 60 milliwatts) with internal diode for coil transient suppression and polarity reversal protection (MIL-R-39016/43). -	103.23
	104-1	Relay, EM, ER, SPDT, low level to 0.5 ampere (latching) (MIL-R-39016/8).- - - - - - - - - - - - - - - - - - - -	104.11
	104-2	Relay, EM, ER, SPDT, low level to 0.5 ampere (latching) with internal diodes for coil transient suppression (MIL-R-39016/27). -	104.12
	104-3	Relay, EM, ER, SPDT, low level to 0.5 ampere (latching) with internal diodes for coil transient suppression and polarity reversal protection (MIL-R-39016/28).- -	104.13
	104-4	Relay, EM, ER, DPDT, low level to 2 amperes (latching) (MIL-R-39016/45). -	104.14
	104-5	Relay, EM, ER, DPDT, low level to 2 amperes (latching) (MIL-R-39016/32). -	104.16
	104-6	Relay, EM, ER, DPDT, low level to 1 ampere (latching) (MIL-R-39016/12). -	104.18
	104-7	Relay, EM, ER, DPDT, low level to 1 ampere (latching) with internal diodes for coil transient suppression (MIL-R-39016/29). -	104.19
	104-8	Relay, EM, ER, DPDT, low level to 1 ampere (latching) with internal diodes for coil transient suppression and polarity reversal protection (MIL-R-39016/30).- -	104.20
	104-9	Relay, EM, ER, 4PDT, low level to 2 amperes (0.150 inch terminal spacing), (latching) (MIL-R-39016/31). - - -	104.21
	104-10	Relay, EM, ER, 4PDT, low level to 2 amperes (0.150 inch terminal spacing) (latching) with internal diodes for coil transient suppression (MIL-R-39016/35).- - - - -	104.22
	104-11	Relay, EM, ER, 4PDT, low level to 2 amperes (0.150 inch terminal spacing) (latching) with internal diodes for coil transient suppression and reverse polarity protection (MIL-R-39016/36). - - - - - - - - - - - - - - - -	104.23
	105-1	Relay, EM, ER, sensitive, DPDT, low level to 2 amperes (latching) (MIL-R-39016/47).- - - - - - - - - - - - - - -	105.5
	106-1	Relay, EM, ER, radio frequency (coaxial) (MIL-R-39016/33). -	106.3
	201-1	Relay, hybrid, ER, DPDT, low level to 1 ampere (transistor driven) (electromechanical output) (MIL-R-28776/1).- - - - - - - - - - - - - - - - - - - -	201.4
	201-2	Relay, hybrid, ER, SPDT, low level to 1 ampere (transistor driven) (electromechanical output) (MIL-R-28776/5).- - - - - - - - - - - - - - - - - - - -	201.5
	201-3	Relay, hybrid, ER, DPDT, internal mosfet drive with zener diode gate protection (MIL-R-28776/6).- - - - -	201.6
	202-1	Relay, hybrid, ER, SPDT, low level to 1 ampere (sensitive) (transistor driven) (electromechanical output) (MIL-R-28776/4).- - - - - - - - - - - - - - - - - - - -	202.4
	202-2	Relay, hybrid, ER, DPDT, low level to 1 ampere (sensitive) (transistor driven) (electromechanical output) (MIL-R-28776/3). -	202.5

Downloaded from http://www.everyspec.com

CONTENTS - Continued

FIGURES - Continued

			Page
Figure	202-3	Relay, hybrid, ER, DPDT, low level to 1 ampere (sensitive) internal mosfet drive with zener diode gate protection (MIL-R-28776/7).	202.6
	301-1	Relay, EM, DPDT, 10 amperes (MIL-R-5757/23).	301.5
	301-2	Relay, EM, DPDT, 2 amperes (MIL-R-5757/10).	301.7
	301-3	Relay, EM, DPDT, 2 amperes (MIL-R-5757/8).	301.9
	301-4	Relay, EM, 4PDT, 2 amperes (MIL-R-5757/7).	301.10
	301-5	Relay, EM, 4PDT, 5 amperes (MIL-R-5757/15).	301.11
	301-6	Relay, EM, 4PDT, 10 amperes (MIL-R-5757/18).	301.12
	301-7	Relay, EM, 6PDT, low level to 2 amperes (MIL-R-5757/1).	301.13
	301-8	Relay, EM, 6PDT, 5 amperes (MIL-R-5757/16).	301.14
	302-1	Relay, EM, SPST, normally open, 400 amperes, unsealed (MS24185-D1).	302.9
	302-2	Relay, EM, SPST, normally open, 300 amperes (MS24184).	302.10
	302-3	Relay, EM, SPST, normally open, 200 amperes (MS24142).	302.11
	302-4	Relay, EM, unsealed, SPST, normally open, 200 amperes (MS24171-D1).	302.12
	302-5	Relay, EM, SPST, normally open, 100 amperes (MS24141).	302.13
	302-6	Relay, EM, SPST, normally open, 50 amperes (MS24140).	302.14
	302-7	Relay, EM, unsealed, SPST, normally open, 50 amperes (MS24166-D1).	302.15
	302-8	Relay, EM, SPDT, 50 amperes (MIL-R-6106/15).	302.16
	302-9	Relay, EM, unsealed, SPDT, 50 amperes normally open and 25 amperes normally closed (MS24187-D2).	302.17
	302-10	Relay, EM, coil and contacts individually sealed, 3PST, normally open, 150 amperes (MS27715).	302.18
	302-11	Relay, EM, unsealed, DPST, normally open, 55 amperes (MS24178-D1).	302.19
	302-12	Relay, EM, 2PDT, N.O., 50 amperes, unsealed mechanically interlocked (MS25030)	302.20
	302-13	Relay, EM, 2PDT, N.O., 100 amperes, unsealed, mechanically interlocked (MS25031)	302.21
	302-14	Relay, EM, 2PDT, N.O., 200 amperes, unsealed, mechanically interlocked (MS25032)	302.22
	302-15	Relay, EM, DPDT, 10 amperes (MS24149).	302.23
	302-16	Relay, EM, DPDT, 10 amperes, solder terminals (MS25273).	302.24
	302-17	Relay, EM, DPDT, 10 amperes, socket mounted (MS25323).	302.25
	302-18	Relay, EM, DPDT, 5 amperes, socket mounted (MS25321).	302.26
	302-19	Relay, EM, DPDT, 10 amperes (MS27247).	302.27
	302-20	Relay, EM, 3PST, normally open, 100 amperes (MS24168).	302.28
	302-21	Relay, EM, 3PDT or 3PST contacts, 50 amperes, permanent magnet drive (MS27751).	302.30
	302-22	Relay, EM, unsealed, 3PST, normally open, 50 amperes (MS24193).	302.32
	302-23	Relay, EM, coil and contacts individually sealed, 3PST contacts, normally open, 75 amperes (MS27714).	302.33
	302-24	Relay, EM, unsealed, 3PST, normally open, 25 amperes (MS24192).	302.34
	302-25	Relay, EM, 3PDT, 25 amperes, permanent magnet drive (MS27743).	302.35
	302-26	Relay, EM, 3PDT, N.O., 25 amperes, unsealed, (mechanically interlocked) (MS24152).	302.37
	302-27	Relay, EM, 4PDT, 10 amperes (MS24568).	302.38
	302-28	Relay, EM, 4PDT, 10 amperes, solder hooks (MS27255).	302.39
	302-29	Relay, EM, 4PDT, 10 amperes (MS25271).	302.40

Downloaded from http://www.everyspec.com

CONTENTS - Continued

FIGURES - Continued

			Page
Figure	302-30	Relay, EM, 3PDT-NO, 50 amperes (MS27750).	302.41
	302-31	Relay, EM, 4PDT, 10 amperes (MS25327).	302.42
	302-32	Relay, EM, 4PDT, 5 amperes (MS25267).	302.43
	302-33	Relay, EM, 4PDT, 5 amperes (MS25325).	302.44
	302-34	Relay, EM, 6PDT, 5 amperes (MS25329).	302.45
	302-35	Relay, EM, 6PDT, 5 amperes (MS25269).	302.46
	302-36	Relay, EM, SPST, N.O., 200 amperes (MS24183).	302.47
	302-37	Relay, EM, SPST, N.O., 100 amperes (MS24182).	302.48
	302-38	Relay, EM, 3PST, N.O., 60 amperes, environmentally sealed (MIL-R-6106/10).	302.49
	302-39	Relay, EM, SPST, N.O., 100 amperes (MS27242).	302.50
	302-40	Relay, EM, DPDT, 10 amperes, permanent magnet drive (MS27401).	302.51
	302-41	Relay, EM, DPDT, 5 amperes (MS25395).	302.53
	302-42	Relay, EM, DPDT, 10 amperes (MS27245).	302.54
	302-43	Relay, EM, 3PST, N.O., 50 amperes (MS27222).	302.55
	302-44	Relay, EM, 3PST, N.O., 25 amperes (MS27997).	302.56
	302-45	Relay, EM, 3PST, N.O., 25 amperes, hook and screw terminals (MS27418).	302.57
	302-46	Relay, EM, 3PST, N.O., 12 amperes (MS21330).	302.59
	302-47	Relay, EM, 3PST, 20 amperes (mechanically interlocked) center off (MS27706).	302.60
	302-48	Relay, EM, 4PDT, 10 amperes (MS27254).	302.61
	302-49	Relay, EM, 4PDT, 10 amperes, permanent magent drive (MS27400).	302.62
	302-50	Relay, EM, 3PST, N.C., 60 amperes, environmentally sealed (MIL-R-6106/11).	302.63
	302-51	Relay, EM, 3PDT, 60 amperes, environmentally sealed (MIL-R-6106/9).	302.64
	302-52	Relay, EM, 3PST, N.O., 25 amperes (MS24143).	302.65
	302-53	Relay, EM, 3PST, N.O., 50 amperes (MS24376).	302.66
	302-54	Relay, EM, 6PDT, 10 amperes, permanent magnet drive (MIL-R-6106/8).	302.67
	302-55	Relay, EM, SPDT, 25 amperes (MIL-R-6106/19).	302.68
	302-56	Relay, EM, SPST, N.C., 50 amperes (MIL-R-6106/26).	302.70
	302-57	Relay, EM, low level to 10 amperes, 3PDT, permanent magnet drive (MIL-R-6106/29).	302.71
	302-58	Relay, EM, low level to 5 amperes, 4PDT, permanent magnet drive (MIL-R-6106/28).	302.73
	302-59	Relay, EM, 4PDT, 10 amperes (MS27709).	302.74
	302-60	Relay, EM, 3PST - N.O. with 2 ampere, SPDT auxiliary contacts, 25 amperes (MIL-R-6106/13).	302.75
	305-1	Relay, EM, DPDT, 2 amperes, (sensitive, 40 milliwatts) (MIL-R-5757/13).	305.4
	306-1	Relay, EM, latch, SPDT, 25 amperes (MIL-R-6106/20).	306.4
	306-2	Relay, EM, latch, DPDT, 10 amperes (MS25457).	306.5
	306-3	Relay, EM, latch, DPDT, 10 amperes (MS25466).	306.6
	306-4	Relay, EM, latch, DPDT, 5 amperes (MS25455).	306.7
	306-5	Relay, EM, latch, DPDT, 5 amperes (MS25465).	306.8
	306-6	Relay, EM, latch, DPDT, 10 amperes (MS27744).	306.9
	306-7	Relay, EM, latch, 3PDT, 50 amperes (MS27749).	306.10
	306-8	Relay, EM, latch, 3PDT, 25 amperes (MS27742).	306.11
	306-9	Relay, EM, latch, 4PDT, 10 amperes (MS25461).	306.12
	306-10	Relay, EM, latch, 4PDT, 10 amperes (MS25468).	306.13
	306-11	Relay, EM, latch, 4PDT, 5 amperes (MS25459).	306.14
	306-12	Relay, EM, latch, 4PDT, 5 amperes (MS25467).	306.15
	306-13	Relay, EM, latch, 4PDT, 10 amperes (MS27745).	306.16
	306-14	Relay, EM, latch, 6PDT, 5 amperes (MS25463).	306.17
	306-15	Relay, EM, latch, 6PDT, 5 amperes (MS25469).	306.18
	306-16	Relay, EM, latch, low level to 5 amperes, DPDT (MIL-R-6106/38).	306.19

Downloaded from http://www.everyspec.com

CONTENTS - Continued

FIGURES - Continued

			Page
Figure	306-17	Relay, EM, latch, low level to 10 amperes, 3PDT, (MIL-R-6106/40).	306.20
	306-18	Relay, EM, latch, low level to 5 amperes, 4PDT, (MIL-R-6106/39).	306.21
	306-19	Relay, EM, latch, 25 ampere, 3PNO with 2 ampere SPDT auxiliary contacts (MIL-R-6106/12).	306.22
	401-1	Relay, solid state, signal switching (MIL-R-28750/5 thru MIL-R-28750/7).	401.3
	401-2	Relay, solid state, power switching (MIL-R-28750/9).	401.4
	401-3	Relay, solid state, sealed, power switching (MIL-R-28750/10).	401.5
	601-1	Relay, time delay on operate, DPDT, 2 amperes (MIL-R-83726/7).	601.6
	601-2	Relay, time delay on release, type IIA, DPDT, 2 amperes (MIL-R-83726/8).	601.7
	601-3	Relay, time delay on release, type IIA, 4PDT, 10 amperes (MIL-R-83726/12).	601.8
	601-4	Relay, time delay on operate, 4PDT, 10 amperes (MIL-R-83726/14).	601.9
	601-5	Relay, time delay on release, type IIB, 4PDT, 10 amperes (MIL-R-83726/23).	601.10
	601-6	Relay, time delay on operate, DPDT, 10 amperes (MIL-R-83726/28).	601.11
	601-7	Relay, time delay on release, type IIA, DPDT, 10 amperes (MIL-R-83726/29).	601.12
	601-8	Relay, adjustable time delay on operate, DPDT, 10 amperes (MIL-R-83726/30).	601.13
	601-9	Relay, adjustable time delay on release, type IIA, DPDT, 10 amperes (MIL-R-83726/31)	601.14
	602-1	Relay, time delay on operate SPST, N.O., 300 milliamperes (MIL-R-83726/13).	602.4
	602-2	Relay, time delay on operate, SPST, N.O., 250 milliamperes (MIL-R-83726/20).	602.5
	602-3	Relay, variable time delay on operate, SPST, N.O., 250 milliamperes (MIL-R-83726/21).	602.6
	602-4	Relay, repeat cycle timer, SPST, N.O., 250 milliamperes (MIL-R-83726/22).	602.7
	701-1	Relay, vacuum, SPST, 15 amperes, 12 kilovolts (MIL-R-83725/1(USAF).	701.5
	701-2	Relay, vacuum, SPDT, 25 amperes, 25 kilovolts (MIL-R-83725/2(USAF).	701.6
	701-3	Relay, vacuum, SPDT, dc, 8 amperes (MIL-R-83725/3(USAF).	701.7
	701-4	Relay, vacuum, SPDT, 3-ampere load switching, 2.5 kilovolts, dc (MIL-R-83725/4(USAF).	701.9
	701-5	Relay, vacuum, SPDT, 18 amperes, 3.5 kilovolts (MIL-R-83725/5(USAF).	701.10
	701-6	Relay, vacuum, SPST, 12 amperes, 3.6 kilovolts (MIL-R-83725/6(USAF).	701.11
	701-7	Relay, vacuum, SPST, N.O., 12 amperes, 3.6 kilovolts (MIL-R-83725/7(USAF).	701.13
	701-8	Relay, vacuum, SPST, N.O., 12 amperes, 3.6 kilovolts (MIL-R-83725/8(USAF).	701.14
	701-9	Relay, vacuum, SPST, lock-up, 12 amperes, 7 kilovolts (MIL-R-83725/9(USAF).	701.15
	701-10	Relay, vacuum, SPST, N.O., 12 amperes, 10 kilovolts (MIL-R-83725/10(USAF).	701.16
	701-11	Relay, vacuum, SPDT, lock-up, 12 amperes, 3.6 kilovolts (MIL-R-83725/11(USAF).	701.17
	701-12	Relay, vacuum, SPDT, 12 amperes, 3.6 kilovolts (MIL-R-83725/12(USAF).	701.18

Downloaded from http://www.everyspec.com

CONTENTS - Continued

FIGURES - Continued

			Page
Figure	701-13	Relay, vacuum, SPDT, lock-up, 12 amperes, 9 kilovolts (MIL-R-83725/13(USAF).- - - - - - - - - - - - - - - - - -	701.19
	701-14	Relay, vacuum, DPDT, 30 amperes RMS, 15 kilovolts peak (MIL-R-83725/14(USAF).- - - - - - - - - - - - - - - - - -	701.21
	701-15	Relay, vacuum, SPDT, 75 amperes, 15 kilovolts (MIL-R-83725/15(USAF).- - - - - - - - - - - - - - - - - -	701.22
	701-16	Relay, vacuum, SPDT, lock-up, 12 amperes dc or 60 hertz RMS, 9 kilovolts or 60 hertz peak (MIL-R-83725/16(USAF).	701.23
	701-17	Relay, vacuum, SPST, N.O., 12 amperes dc, or 60 hertz RMS, 10 kilovolts peak dc (MIL-R-83725/17(USAF).- - -	701.24
	701-18	Relay, vacuum, SPST, N.C., dc, 8 amperes (MIL-R-83725/18(USAF).- - - - - - - - - - - - - - - - - -	701.25

TABLES

Table	I	Temperature class- -	17
	II	Shock- -	17
	III	Vibration characteristic -	18
	IV	Terminal -	18
	V	Failure rate level -	18
	101.I.	Relays, EM, ER, dc operated, part numbers and characteristics. -	101.2
	102.I.	Relays, EM, ER, ac operated, part numbers and characteristics. -	102.2
	103.I.	Relays, EM, ER, sensitive, dc operated, part numbers and characteristics. -	103.2
	104.I.	Relays, EM, ER, latching, dc operated, part numbers and characteristics. -	104.2
	105.I.	Relays, EM, ER, latching, sensitive, dc operated, part numbers and characteristics. - - - - - - - - - - - - - - - -	105.2
	106.I.	Relays, EM, ER, radio frequency (coaxial) dc operated, part numbers and characteristics.- - - - - - - - - - - - -	106.2
	201.I.	Relays, hybrid, ER, dc operated, part numbers and characteristics. -	201.2
	202.I.	Relays, hybrid, ER, dc operated, sensitive, part numbers and characteristics. -	202.2
	301.I.	Relays, EM, dc operated, nonestablished reliability, part numbers and characteristics.- - - - - - - - - - - -	301.2
	301.I.	Relays, EM, dc operated, part numbers and characteristics.	301.2
	302.I.	Relays, EM, dc operated, part numbers and characteristics.	302.2
	303.I.	Relays, EM, ac operated, part numbers and characteristics.	303.2
	304.I.	Relays, EM, ac operated, part numbers and characteristics.	304.2
	305.I.	Relays, EM, sensitive, dc operated, part numbers and characteristics. -	305.2
	306.I.	Relays, EM, latching, dc operated, part numbers and characteristics. -	306.2
	307.I.	Relays, EM, latching, ac operated, part numbers and characteristics. -	307.2
	308.I.	Relays, EM, latching, dc/ac operated, part numbers and characteristics. -	308.2
	401.I.	Relays, dc input for electronic and communications type equipment part numbers and characteristics.- - - - - -	401.2
	601.I.	Relays, time delay, hybrid, part numbers and characteristics. -	601.2
	602.I.	Relays, time delay, solid state, part numbers and characteristics. -	602.2
	701.I.	Relays, vacuum, high voltage, dc coil operated, part numbers and characteristics. - - - - - - - - - - - - - - -	701.2

CROSS REFERENCE

Cross reference of part numbers to tables and figures- - - - - - - xii

Downloaded from http://www.everyspec.com

CROSS REFERENCE OF PART NUMBER TO TABLES AND FIGURES

Part Number	Table Number	Figure Number
MS21330-D2	302.I	302-46
MS24140-D1, -D2	302.I	302-6
MS24141-D1, -D2	302.I	302-5
MS24142-D1, -D2	302.I	302-3
MS24143-A3, -A4	304.I	302-52
MS24143-D1, -D2	302.I	302-52
MS24149-A1	304.I	302-15
MS24149-D1	302.I	302-15
MS24152-D1	302.I	302-26
MS24166-D1	302.I	302-7
MS24168-A3, -A4	304.I	302-20
MS24168-D1, -D2	302.I	302-20
MS24171-D1	302.I	302-4
MS24178-D1	302.I	302-11
MS24182-D1	302.I	302-37
MS24183-D1, -D2	302.I	302-36
MS24184-D1, -D2	302.I	302-2
MS24185-D1	302.I	302-1
MS24187-D2	302.I	302-9
MS24192-D1	302.I	302-24
MS24193-D1	302.I	302-22
MS24376-A3, -A4	304.I	302-53
MS24376-D1, -D2	302.I	302-53
MS24568-A1, -A2	304.I	302-27
MS24568-D1	302.I	302-27
MS25030-D1B	302.I	302-12
MS25031-D1B	302.I	302-14
MS25032-D1	302.I	302-13
MS25267-A1	304.I	302-32
MS25267-D1	302.I	302-32
MS25269-A1	304.I	302-35
MS25269-D1	302.I	302-35
MS25271-A1	304.I	302-29
MS25271-D1	302.I	302-29
MS25273-A1, -A2	304.I	302-16
MS25273-D1	302.I	302-16
MS25321-A2, -A3	304.I	302-18
MS25321-D2	302.I	302-18
MS25323-A2, -A3	304.I	302-17
MS25323-D2	302.I	302-17
MS25325-A2	304.I	302-33
MS25325-D1	302.I	302-33
MS25327-A1	304.I	302-31
MS25327-D1	302.I	302-31
MS25329-A1	304.I	302-34
MS25329-D1	302.I	302-34
MS25395-A1, -A3	304.I	302-41
MS25395-D1	302.I	302-41
MS25455-A1	307.I	306-4
MS25455-D1	306.I	306-4
MS25457-A1	307.I	306-2
MS25457-D1	306.I	306-2
MS25459-A1	307.I	306-11
MS25459-D1	306.I	306-11
MS25461-A1	307.I	306-9
MS25461-D1	306.I	306-9
MS25463-A1	307.I	306-14
MS25463-D1	306.I	306-14
MS25465-A1	307.I	306-5
MS25465-D1	306.I	306-5
MS25466-A1	307.I	306-3
MS25466-D1	306.I	306-3
MS25467-A1	307.I	306-12
MS25467-D1	306.I	306-12
MS25468-A1	307.I	306-10
MS25468-AD1	308.I	306-10
MS25468-D1	306.I	306-10
MS25469-A1	307.I	306-15
MS25469-D1	306.I	306-15
MS27222-1, -2	302.I	302-43
MS27222-3, -4	304.I	302-43
MS27242-1, -2	302.I	302-39
MS27245-1, -3	302.I	302-42
MS27247-1, -2	302.I	302-19
MS27254-1	304.I	302-48
MS27254-2	302.I	302-48
MS27255-1, -3	304.I	302-28
MS27255-2, -4	302.I	302-28
MS27400-5Z,-6Z,19Z,-36Z,-44Z,-45Z	101.I	101-28
MS27400-29Z,030Z,031Z,038Z,046Z, 047Z	101.I	101-30
MS27400-032Z,033Z,-034Z,-50Z,-51Z	102.I	102-3
MS27400-9,-10,-17,-21,-23,-24,-35, -37,-40,-41,-42,-43	302.I	302-49
MS27400-26,-27,-28,-39,-48,-49	304.I	302-49
MS27401-5Z,-6Z,-21Z,-38Z,-42Z, -50Z,-51Z,-58Z	101.I	101-12
MS27401-31Z,-32Z,-33Z,-40Z,-044Z, -52Z,-53Z,-59Z	101.I	101-14
MS27401-34Z,-35Z,-36Z,-56Z,-57Z	102.I	102-1
MS27401-13,-14,-23,-25,-26,-27, -37,-39,-41,-43,-46,-47, -48,-49	302.I	302-40
MS27401-28,-29,-30,-45,-54,-55	304.I	302-40
MS27418-1B, -2B	302.I	302-45
MS27418-1A, -2A, -1C, -2C	304.I	302-45
MS27706-1B, -2B	302.I	302-47
MS27709-1, -2, -3	302.I	302-59
MS27714-1	302.I	302-23
MS27715-1	302.I	302-10
MS27715-2	304.I	302-10
MS27742-1, -2	306.I	306-8
MS27743-10,-11,-12,-30,-31	101.I	101-21
MS27743-22,-23,-24,-34,-35	101.I	101-23
MS27743-25,-26,-27	102.I	102-2
MS27743-4,-5,-6,-16,-17,-18,-22, -23,-24,-28,-29,-32,-33	302.I	302-25
MS27743-19,-20,-21	304.I	302-25
MS27744-1, -2	306.I	306-6
MS27744-3, -4	307.I	306-6
MS27745-1, -2, -5	306.I	306-13
MS27745-3, -4	307.I	306-13
MS27749-1	306.I	306-7
MS27749-2	306.I	306-7
MS27750-1, -2	302.I	302-30
MS27751-1,-3,-5,-7,-9,-11,-13, -15,-17,-19,-21	302.I	302-21
MS27751-2,-4,-6,-8,-10	304.I	302-21
MS27997-D1, -D2	302.I	302-44
MS27997-A1, -A2	304.I	302-44
M28750/5-001	401.I	401-1
M28750/6-001	401.I	401-1

Downloaded from http://www.everyspec.com

CROSS REFERENCE OF PART NUMBER TO TABLES AND FIGURES - Continued

Part Number	Table Number	Figure Number
M28750/7-001	401.I	401.1
M28750/9-001	401.I	401-2
M28750/10-001, -002	401.I	401-3
M28776/1-019Z thru M28776/1-030Z	201.I	201-1
M28776/3-025Z thru M28776/3-040Z	202.I	202-2
M28776/4-025Z thru M28776/4-040Z	202.I	202-1
M28776/5-019Z thru M28776/5-030Z	201.I	201-2
M28776/6-001Z thru M28776/6-006Z	201.I	201-3
M28776/7-001Z thru M28776/7-006Z	202.I	202-3
M39016/6-104Z,-105Z,-107Z,-109Z,-111Z, -112Z,-114Z,-116Z,-118Z,-119Z, -121Z,-123Z,-124Z,-125Z,-126Z, -127Z,-129Z,-130Z,-131Z,-132Z, -133Z,-135Z,-136Z,-138Z,-139Z	101.I	101-6
M39016/7-014Z,-016Z,-018Z,-020Z, -022Z,-024Z, thru -030Z	101.I	101-1
M39016/8-014Z,-016Z,-018Z,-020Z,-022Z, -024Z, thru -030Z	104.I	104-1
M39016/9-019Z thru -024Z, -043Z thru -048Z, -057Z thru -062Z, -064Z thru -069Z	101.I	101-7
M39016/10-018Z,-020Z,-022Z,-024Z, -026Z,-028Z,-030Z,-033Z thru -040Z	103.I	103-1
M39016/11-020Z,-022Z,-024Z,-026Z, -028Z,-030Z,-034Z thru -040Z	103.I	103-4
M39016/12-037Z thru -060Z	104.I	104-6
M39016/13-055Z thru -081Z, -089Z thru -115Z	101.I	101-8
M39016/14-001Z thru -007Z	101.I	101-24
M39016/15-035Z thru -040Z, 047Z thru -052Z, -077Z thru -100Z	101.I	101-15
M39016/16-026Z thru -032Z, -034Z thru -040Z	103.I	103-8
M39016/17-025Z thru -036Z	101.I	101-9
M39016/18-025Z thru -036Z	101.I	101-16
M39016/19-025Z thru -036Z	101.I	101-18
M39016/20-037Z thru -060Z	101.I	101-19
M39016/21-021Z thru -024Z,-031Z,-032Z, -035Z thru -040Z	103.I	103-10
M39016/22-018Z thru -024Z	101.I	101-17
M39016/23-019Z thru -030Z	101.I	101-4
M39016/24-019Z thru -030Z	101.I	101-5
M39016/25-025Z thru -040Z	103.I	103-2
M39016/26-026Z thru -032Z, -034Z thru -040Z	103.I	103-3
M39016/27-019Z thru -030Z	104.I	104-2
M39016/28-019Z thru -030Z	104.I	104-3
M39016/29-037Z thru -060Z	104.I	104-7
M39016/30-037Z thru -060Z	104.I	104-8
M39016/31-001Z thru -006Z	104.I	104-9
M39016/32-002Z thru -006Z, -008Z thru -012Z, -014Z thru -018Z	104.I	104-5
M39016/33-001Z thru -006Z, -013Z thru -018Z, -020Z thru -024Z	106.I	106-1
M39016/34-001Z thru -015Z	101.I	101-10
M39016/35-001Z thru -006Z	104.I	104-10
M39016/36-001Z thru -006Z	104.I	104-11
M39016/37-001Z thru -027Z	101.I	101-33
M39016/38-001Z thru -027Z	101.I	101-34
M39016/39-001Z thru -018Z	101.I	101-25
M39016/40-001Z thru -030Z	101.I	101-26
M39016/41-033Z thru -048Z	103.I	103-5
M39016/42-033Z thru -048Z	103.I	103-9
M39016/43-033Z thru -048Z	103.I	103-11
M39016/44-001Z,-002Z,-004Z,-005Z, -007Z,-008Z,-010Z,-011Z, -013Z,-014Z,-016Z,-017Z, -019Z,-020Z,-022Z,-023Z, -025Z,-026Z,-028Z,-029Z, -031Z,-032Z,-034Z,-035Z, -037Z,-038Z,-040Z,-041Z, -043Z,-044Z	103.I	103-6
M39016/45-001Z thru -030Z	104.I	104-4
M39016/47-001Z thru -003Z	105.I	105-1
M39016/48-001Z thru -003Z	103.I	103-7
M5757/1-027, -028	301.I	301-7
M5757/7-001	301.I	301-4
M5757/8-002	301.I	301-3
M5757/10-035,-039,-040,-052,-054, -056,-059,-060	301.I	301-2
M5757/13-041 thru -044, -047, -048,-050 thru -054, -057,-058,-060,-072 thru -075,-078,-079,-081	305.I	305-1
M5757/15-001	301.I	301-5
M5757/15-003, -005	303.I	301-5
M5757/16-001	301.I	301-8
M5757/16-003, -005	303.I	301-8
M5757/18-001	301.I	301-6
M5757/18-003, -005	303.I	301-6
M5757/23-001,-003,-005,-006,-008, -010,-011,-013,-015,-016, -018,-020,-026,-028,-030 thru -034,-036,-037,-039, -041,-042	301.I	301-1
M6106/8-005, -006	101.I	101-31
M6106/8-011, -012	101.I	101-32
M6106/8-007, -008	102.I	102-4
M6106/8-009,-010,-013,-014	302.I	302-54
M6106/8-003, -004	304.I	302-54
M6106/9-001, -002	302.I	302-51
M6106/10-001, -002, -005	302.I	302-38
M6106/11-001, -002	302.I	302-50
M6106/12-001, -002	306.I	306-19
M6106/13-001, -002	302.I	302-60
M6106/15-001	302.I	302-8
M6106/19-003, -004, -010 thru -019, -025	302.I	302-55
M6106/19-005 thru -009	101.I	101-2
M6106/19-020 thru -024	101.I	101-3
M6106/20-001, -002	306.I	306-1
M6106/26-001	302.I	302-56
M6106/27-002Z,-006Z,-010Z,-014Z, -018Z,-022Z,-026Z,-030Z, -034Z,-038Z	101.I	101-11
M6106/27-004Z,-008Z,-012Z,-016Z, -020Z,-024Z,-028Z,-032Z, -036Z,-042Z	101.I	101-13
M6106/27-001,-005,-009,-013,-017, -021,-025,-029,-033,-037	302.I	101-11

Downloaded from http://www.everyspec.com

CROSS REFERENCE OF PART NUMBER TO TABLES AND FIGURES - Continued

Part Number	Table Number	Figure Number
M6106/27-003,-007,-011,-015,-019, -023,-027,-031,-035,-039	302.I	101-13
M6106/28-002,-006Z,-010Z,-014Z,-018Z, -022Z,-026Z,-030Z,-034Z	101.I	101-27
M6106/28-004Z,-008Z,-012Z,-016Z,-020Z, -024Z,-028Z,-032Z,-036Z	101.I	101-29
M6106/28-001,-003,-005,-007,-009,-011, -013,-015,-017,-019,-021,-023, -025,-027,-029,-031,-033,-035	302.I	302-58
M6106/29-002Z,-006Z,-010Z,-014Z,-018Z, -022Z,-026Z,-030Z,-034Z	101.I	101-20
M6106/29-004Z,-008Z,-012Z,-016Z,-020Z, -024Z,-028Z,-032Z,-036Z	101.I	101-22
M6106/29-001,-003,-005,-007,-009,-011, -015,-017,-019,-021,-023,-025, -027,-029,-031,-033,-035	302.I	302-57
M6106/38-001, -002, -003	306.I	306-16
M6106/39-001, -002, -003	306.I	306-18
M6106/40-001, -002, -003	306.I	306-17
M83725/1-001 thru -006	701.I	701-1
M83725/2-001 thru -003	701.I	701-2
M83725/3-001, -002, -003	701.I	701-3
M83725/4-001, -002	701.I	701-4
M83725/5-001	701.I	701-5
M83725/6-001 thru -004	701.I	701-6
M83725/7-001, -002, -003	701.I	701-7
M83725/8-001, -002, -003	701.I	701-8
M83725/9-001 thru -004	701.I	701-9
M83725/10-001, -002	701.I	701-10
M83725/11-001 thru -004	701.I	701-11
M83725/12-001 thru -004	701.I	701-12
M83725/13-001 thru -004	701.I	701-13
M83725/14	701.I	701-14
M83725/15-001 thru -005	701.I	701-15
M83725/16-001 thru -004	701.I	701-16
M83725/17-001, -002	701.I	701-17
M83726/7-0600	601.I	601-1
M83725/18-001 thru -003	601.I	601-1
M83726/7-1000	601.I	601-1
M83726/7-5000	601.I	601-1
M83726/7-7500	601.I	601-1
M83726/7-1001	601.I	601-1
M83726/7-2001	601.I	601-1
M83726/7-3001	601.I	601-1
M83726/7-5001	601.I	601-1
M83726/7-7001	601.I	601-1
M83726/7-1002	601.I	601-1
M83726/7-1202	601.I	601-1
M83726/7-2002	601.I	601-1
M83726/7-3002	601.I	601-1
M83726/7-4502	601.I	601-1
M83726/7-6002	601.I	601-1
M83726/7-1203	601.I	601-1
M83726/7-1803	601.I	601-1
M83726/7-3003	601.I	601-1
M83726/8-1000	601.I	601-2
M83726/8-2001	601.I	601-2
M83726/8-3001	601.I	601-2
M83726/8-4001	601.I	601-2
M83726/8-8001	601.I	601-2
M83726/8-1002	601.I	601-2
M83726/8-1402	601.I	601-2
M83726/8-3002	601.I	601-2
M83726/8-4502	601.I	601-2
M83726/8-6002	601.I	601-2
M83726/8-1203	601.I	601-2
M83726/8-1803	601.I	601-2
M83726/8-3003	601.I	601-2
M83726/12-1001	601.I	601-3
M83726/12-2001	601.I	601-3
M83726/12-3001	601.I	601-3
M83726/12-4001	601.I	601-3
M83726/12-8001	601.I	601-3
M83726/12-1002	601.I	601-3
M83726/12-1402	601.I	601-3
M83726/12-3002	601.I	601-3
M83726/12-4502	601.I	601-3
M83726/12-6002	601.I	601-3
M83726/12-1203	601.I	601-3
M83726/12-1803	601.I	601-3
M83726/12-3003	601.I	601-3
M83726/13-1000	602.I	602-1
M83726/13-5000	602.I	602-1
M83726/13-7500	602.I	602-1
M83726/13-1001	602.I	602-1
M83726/13-2001	602.I	602-1
M83726/13-3001	602.I	602-1
M83726/13-5001	602.I	602-1
M83726/13-7001	602.I	602-1
M83726/13-1002	602.I	602-1
M83726/13-1202	602.I	602-1
M83726/13-1502	602.I	602-1
M83726/13-2002	602.I	602-1
M83726/13-3002	602.I	602-1
M83726/13-4502	602.I	602-1
M83726/13-6002	602.I	602-1
M83726/13-1203	602.I	602-1
M83726/13-1803	602.I	602-1
M83726/13-3003	602.I	602-1
M83726/14-1000	601.I	601-4
M83726/14-5000	601.I	601-4
M83726/14-7500	601.I	601-4
M83726/14-1001	601.I	601-4
M83726/14-2001	601.I	601-4
M83726/14-3001	601.I	601-4
M83726/14-5001	601.I	601-4
M83726/14-7001	601.I	601-4
M83726/14-1002	601.I	601-4
M83726/14-1202	601.I	601-4
M83726/14-1502	601.I	601-4
M83726/14-2002	601.I	601-4
M83726/14-3002	601.I	601-4
M83726/14-4502	601.I	601-4
M83726/14-6002	601.I	601-4
M83726/14-1203	601.I	601-4
M83726/14-1803	601.I	601-4
M83726/14-3003	601.I	601-4
M83726/20-1000	601.I	602-2
M83726/20-5000	601.I	602-2
M83726/20-7500	601.I	602-2
M83726/20-1001	601.I	602-2
M83726/20-2001	601.I	602-2

Downloaded from http://www.everyspec.com

CROSS REFERENCE OF PART NUMBER TO TABLES AND FIGURES - Continued

Part Number	Table Number	Figure Number
M83726/20-3001	601.I	602-2
M83726/20-5001	602.I	602-2
M83726/20-7001	602.I	602-2
M83726/20-1002	602.I	602-2
M83726/20-1202	602.I	602-2
M83726/20-1502	602.I	602-2
M83726/20-2002	602.I	602-2
M83726/20-3002	602.I	602-2
M83726/20-4502	602.I	602-2
M83726/20-6002	602.I	602-2
M83726/20-1203	602.I	602-2
M83726/20-1803	602.I	602-2
M83726/20-3003	602.I	602-2
M83726/21-001 thru -008	602.I	602-3
M83726/22-XXXX (see table 602-1)	602.I	602-4
M83726/23-1001	601.I	601-5
M83726/23-2001	601.I	601-5
M83726/23-3001	601.I	601-5
M83726/23-4001	601.I	601-5
M83726/23-8001	601.I	601-5
M83726/23-1002	601.I	601-5
M83726/23-1402	601.I	601-5
M83726/23-3002	601.I	601-5
M83726/23-4502	601.I	601-5
M83726/23-6002	601.I	601-5
M83726/28-1000X	601.I	601-6
M83726/28-5000X	601.I	601-6
M83726/28-7500X	601.I	601-6
M83726/28-1001X	601.I	601-6
M83726/28-2001X	601.I	601-6
M83726/28-3001X	601.I	601-6
M83726/28-5001X	601.I	601-6
M83726/28-7001X	601.I	601-6
M83726/28-1002X	601.I	601-6
M83726/28-1202X	601.I	601-6
M83726/28-1502X	601.I	601-6
M83726/28-2002X	601.I	601-6
M83726/28-3002X	601.I	601-6
M83726/28-4502X	601.I	601-6
M83726/28-6002X	601.I	601-6
M83726/28-1203X	601.I	601-6
M83726/28-1803X	601.I	601-6
M83726/28-3003X	601.I	601-6
M83726/29-1001X	601.I	601-7
M83726/29-2001X	601.I	601-7
M83726/29-3001X	601.I	601-7
M83726/29-4001X	601.I	601-7
M83726/29-8001X	601.I	601-7
M83726/29-1002X	601.I	601-7
M83726/29-1402X	601.I	601-7
M83726/29-3002X	601.I	601-7
M83726/29-4502X	601.I	601-7
M83726/29-6002X	601.I	601-7
M83726/29-1203X	601.I	601-7
M83726/29-1803X	601.I	601-7
M83726/29-3003X	601.I	601-7
M83726/30-1000X	601.I	601-8
M83726/30-5000X	601.I	601-8
M83726/30-7500X	601.I	601-8
M83726/30-5001X	601.I	601-8
M83726/30-7001X	601.I	601-8
M83726/30-1002X	601.I	601-8
M83726/30-1202X	601.I	601-8
M83726/30-1502X	601.I	601-8
M83726/30-2002X	601.I	601-8
M83726/30-3002X	601.I	601-8
M83726/30-4502X	601.I	601-8
M83726/30-6002X	601.I	601-8
M83726/30-1203X	601.I	601-8
M83726/30-1803X	601.I	601-8
M83726/30-3003X	601.I	601-8
M83726/31-1001X	601.I	601-9
M83726/31-2001X	601.I	601-9
M83726/31-3001X	601.I	601-9
M83726/31-4001X	601.I	601-9
M83726/31-8001X	601.I	601-9
M83726/31-1002X	601.I	601-9
M83726/31-1402X	601.I	601-9
M83726/31-3002X	601.I	601-9
M83726/31-4502X	601.I	601-9
M83726/31-6002X	601.I	601-9
M83726/31-1203X	601.I	601-9
M83726/31-1803X	601.I	601-9
M83726/31-3003X	601.I	601-9

Downloaded from http://www.everyspec.com

1. SCOPE

1.1 Scope. This standard is a guide for the selection of relays for use in military equipment. Included are the following:

a. Selected standard relay types reviewed and accepted jointly by the Departments of the Army, Navy, and Air Force for use in the design and manufacture of military equipment.

b. Details of relay physical and electrical characteristics are included in sections 100 through 700 for the convenience of designers in selecting and applying standard types.

Requirements for relays in this standard are covered in the latest issue of the applicable military specification or MS sheets (see 2.1).

1.2 Purpose of standard. The purpose of this standard is to:

a. Provide the equipment designer with a list of relays that are considered to be suitable for military applications.

b. Control and minimize the variety of relays used in military equipment in order to facilitate logistic support of the field equipment.

c. Establish criteria pertinent to the choice, application, and use of relays in order to reduce "misapplication" failures.

Downloaded from http://www.everyspec.com

2. REFERENCED DOCUMENTS

2.1 Government documents.

2.1.1 Specifications, standards, and handbooks. Unless otherwise specified, the following specifications, standards, and handbooks of the issue listed in that issue of the Department of Defense Index of Specifications and Standards (DoDISS) specified in the solicitation form a part of this specification to the extent specified herein.

SPECIFICATIONS

MILITARY

MIL-R-5757 - Relays, Electromagnetic, General Specification For.

MIL-R-6106 - Relays, Electromagnetic, (Including Established Reliability Types) General Specification For.

MIL-R-28750 - Relays, Solid State, General Specification For.

MIL-R-28776 - Relays, Hybrid, Established Reliability, General Specification For.

MIL-R-39016 - Relays, Electromagnetic, Established Reliability, General Specification For.

MIL-R-83725 - Relays, Vacuum, General Specification For.

MIL-R-83726 - Relays, Time Delay, Hybrid and Solid State, General Specification For.

STANDARDS

MILITARY

MIL-STD-202 - Test Methods for Electronic and Electrical Component Parts.

MIL-STD-690 - Failure Rate Sampling Plans and Procedures.

(Copies of specifications, standards, handbooks, drawings, and publications required by manufacturers in connection with specific acquisition functions should be obtained from the contracting activity or as directed by the contracting officer.)

2.2 Other publications. The following documents form a part of this standard to the extent specified herein. The issues of the documents which are indicated as DoD adopted shall be the issues listed in the current DoDISS and the supplement thereto, if applicable.

NATIONAL ASSOCIATION OF RELAY MANUFACTURERS

Engineer's Relay Handbook

(Application for copies should be addressed to the National Association of Relay Manufacturers, P. O. Box 1505, Elkhart, IN 46515.)

AMERICAN NATIONAL STANDARDS INSTITUTE

ANSI C83.16 - Definitions and Terminology for Relays for Electronic Equipment.
ANSI Y32.3 - Graphic Symbols For Electrical and Electronics Diagrams.

(Application for copies should be addressed to the American National Standards Institute, 1430 Broadway, New York, NY 10018.)

(Industry association specifications and standards are generally available for reference from libraries. They are also distributed among technical groups and using federal agencies.)

2.3 Order of precedence. In the event of a conflict between the text of this standard and the references cited herein, the text of this standard shall take precedence.

Downloaded from http://www.everyspec.com

3. DEFINITIONS

3.1 Terms. For a list of common terms used in the rating and design application of relays, refer to the Engineer's Relay Handbook. For relay definitions and terminology refer to ANSI C83.16 and the following:

Relay solid state. A self-contained device that performs the function of opening or closing an electrical circuit in response to electrical changes in an external circuit. In lieu of separable contacts and their actuator(s), the switching function is accomplished by means of an arrangement of semiconductors and passive circuit devices. The device is designed to have electrical isolation between control circuit and output circuit. Excludes RELAY, HYBRID.

Downloaded from http://www.everyspec.com

4. GENERAL REQUIREMENTS

4.1 Choice of relay types. The variety of relay types used in any particular equipment shall be the minimum necessary to obtain satisfactory performance with good design practices. Where more than one type of relay may be used in a given application, consideration should be given to cost and availability. The relays identified in this standard meet the criteria for standard types (see 4.2).

4.2 Conflict of requirements. In the event of conflict between technical requirements of relays described in this standard and the applicable specification, the latter shall govern.

4.3 Criteria for inclusion in this standard. The criteria for the inclusion of relays in this standard are as follows:

a. The relay shall be considered by representatives of the military departments, the best available type for current application.

b. The relay shall be in production and continued availability shall be reasonably certain.

c. The relay shall have an approved military specification and be listed on a qualified products list.

d. All contact ratings are with relay case grounded.

Downloaded from http://www.everyspec.com

5. DETAILED REQUIREMENTS

5.1 Requirements for standard relay types. The detailed requirements for standard relay types are contained in the applicable military specification.

Downloaded from http://www.everyspec.com

6. APPLICATION INFORMATION

6.1 General. This section contains general guideline information to assist the application engineers or circuit designers in choosing the appropriate relay. For application information pertaining to specific relay types, refer to the numbered sections for relays.

a. This standard includes a listing of relay types selected by the Military Departments and provides sufficient information for the application or circuit design engineer to determine the suitability of one of the standard relay types for a specific application. This standard also includes a section index of the general relay families. Example: Section 100 - Relays, Electromagnetic (EM), Established Reliability (ER); Section 600 - Relays, Time Delay. The section index also lists the various relay types within each family listing.

b. Each section includes a subsection index of all the relay types within the family, outlining general characteristics. A relay type that appears to be suitable can be chosen from this index. By looking up this suitable type, additional characteristics such as outline drawings, physical dimensions, schematic diagrams, electrical performance characteristics, environmental characteristics, and the applicable military specification are listed. By referring to the applicable specification, all performance requirements and the complete testing program, including test order, sampling plans, and test methods, may be determined. This should complete the information necessary to determine the suitability of a relay type for a specific application.

6.2 Relay selection and application. CAUTION: The use of any coil voltage less than the rated coil voltage will compromise the operation of the relay. Choosing the proper relay depends primarily on matching the relay to the load, power supply, and environment. Selection should be limited to items that meet the following requirements:

a. Contacts must be rated for the load. Current rating, type of load (resistive, lamp, motor, inductive, and so forth), impedance range, voltage rating, dc or ac, frequency, single phase or polyphase, polyphase load balance, and type of switching or transfer should all be considered. Each of the following switching and transfer functions places a different requirement on the relay contacts and must be considered when selecting a relay with the proper contact rating:

(1) On-off switching - dc, single phase or polyphase.

(2) Motor reversing (ac or dc).

(3) Transferring load between phases of same source.

(4) Transferring load between unsynchronized ac sources.

b. Power supply characteristics must be taken into account. Voltage regulation, variations in frequency, ripples and spikes, as well as steady state conditions should be included. If more than one power supply is involved, not only must each be suitable but any interaction between them also should be investigated.

c. Coil (or coils) should be rated to insure proper operation under all conditions anticipated.

d. Consideration of the environmental conditions anticipated throughout service life, as well as those expected during storage and transportation before installing the relays in the equipment is mandatory. Electrical parameters, environmental factors, mechanical stresses, and compatibility are among the categories the relay must be investigated for.

e. The circuit the relay is used in, the interlocking employed, the wiring harness, and associated items should all be investigated to assure mutual suitability.

Downloaded from http://www.everyspec.com

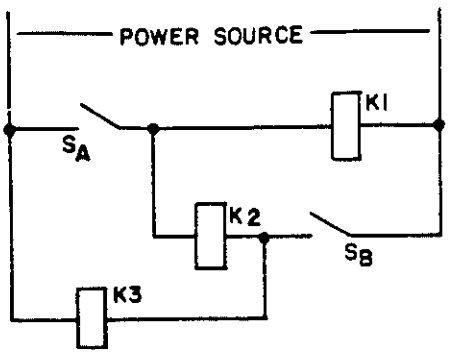

FIGURE 1A. Improper circuit design.

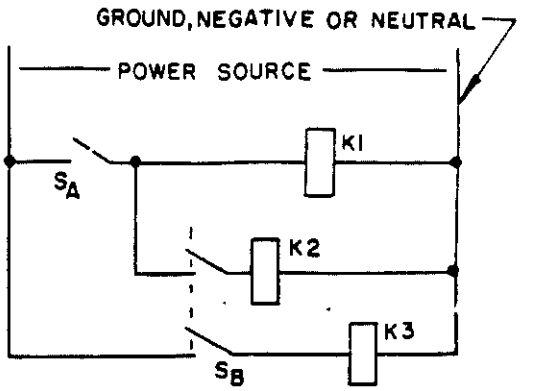

FIGURE 1B. Properly designed circuit.

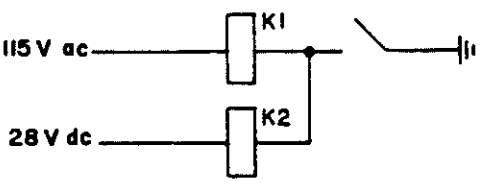

FIGURE 1C. Improper circuit design.

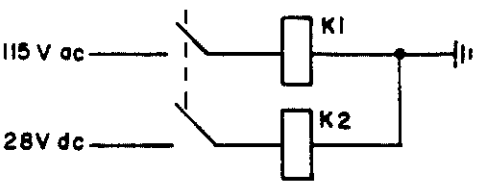

FIGURE 1D. Properly designed circuit.

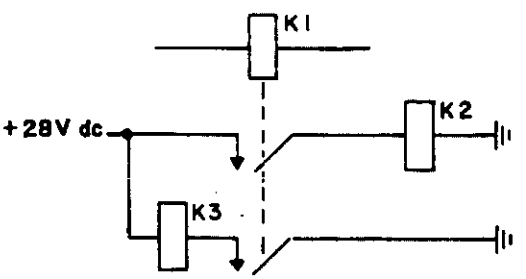

FIGURE 1E. Not recommended relay open ground.

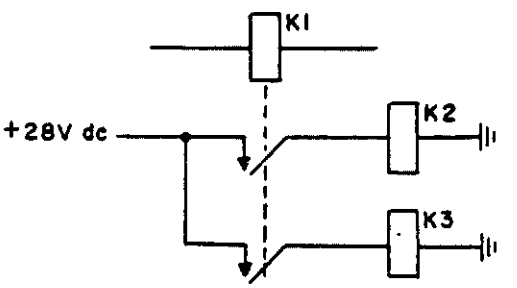

FIGURE 1F. Preferred design, two relays controlled with no adverse interaction on dropout.

Downloaded from http://www.everyspec.com

f. Relays should be hard wired, whenever possible, to avoid the additional contact points associated with the relay plug-in socket arrangement.

g. Care should be exercised in handling and lead cutting of TO-5 type relays since extremely close cover to frame spacing as well as fragile glass seals make these type relays susceptible to physical damage if not handled properly.

h. Any switching device controlling the relay coil circuit must be capable of withstanding, without damage, the sum of the maximum coil circuit voltage and the peak value of transient voltage that results when the coil circuit is opened; for example, a switch controlling a relay coil that is (1) fed by a 28-volt dc line and (2) transient suppressed to 42 volts must be capable of withstanding 28 + 42 = 70 volts surges without damage.

i. In selecting solid state electronic switching devices to control relay coil circuits, be careful to select a solid state device that has a leakage current (in the "off" state) that is sufficiently low to permit the relay to drop out.

j. Control of the relay coil circuit by other than step-function switching may invalidate published relay performance properties such as pull-in and dropout voltages, and pull-in, dropout, and bounce times.

6.2.1 On-off load control. On-off control of loads is a typical relay function. Where practical, connect one side of every load, including relay coils, to a common line (the grounded conductor of their power supply), if applicable. All contacts will be on the hot side with respect to the loads. No contact shall be connected to ground. The switching should be done in the hot side of circuit to prevent electrical shock, decrease the possibility of circuit malfunction, and reduce the number of contacts. Figures 1A, 1B, 1C, 1D, 1E, 1F, and 1G show the problems that can be avoided by proper circuit design.

a. Figure 1A is an example of control problems resulting from not connecting all loads to the same common terminal. With three relays in series across the line, each has approximately one-third voltage continuously. In addition to the power drain, the relay will be sensitive to temperature, vibration, and mechanical shock causing spurious operation. Relay K1 is energized when switch A is closed. Relay K3 is energized when switch B is closed. Relay K2 is energized when switch A and switch B are both closed. If switch A is closed and then reopened, relay K1 may remain in the energized mode due to the back circuit through coils K1, K2, and K3. Relay K3 may stay energized similarly when switch B is opened. Any, or all relays may stay energized if both switches are closed then opened.

b. Figure 1C. The opening ground lead does not open both relays; it places both in series.

c. Figure 1F. Two relays in parallel will interact on dropout; if one relay is much larger the smaller relay may false cycle. Transient protection on either relay coil will suppress both, whether or not desired. With two relay coils in parallel, if one has an internal series diode and the other is not suppressed, the diode may break down from the other coil transients on dropout.

d. Figure 1G. A very common example of poor practice is motor dynamic braking with form C contacts. Contacts may handle run current but often fail to interrupt inrush and cause a line to ground fault through the switch. It is improper circuit design to have line and ground on the stationary contacts.

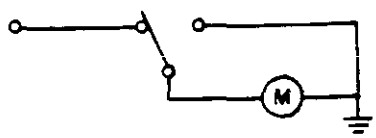

FIGURE 1G. Improper motor braking.

Downloaded from http://www.everyspec.com

6.2.2 Transfer operation. Relays used in transfer operations are subject to greater electrical stresses than relays used for on-off load control. Typical transfer applications are those in which relays reverse motors, reverse load polarity, or connect alternate power supplies to a load. Form C contact configurations are particularly susceptible to failure in transfer modes. Fast operation of a transfer contact can short circuit a power supply by making at one voltage before ionization from a previous voltage has decayed.

a. Operate time, release time, contact air gap, spacing between contact poles, the type of load, and the power supply characteristics are all factors that must be considered. Some manufacturers offer relays with form C contacts, properly derated, for transfer applications. Because of the vagaries which arise even with the best designed circuits, users should be aware of the possibility of failures. The reason may be no more sophisticated than overvoltage applied to the coil, resulting in abnormally fast pickup. Mechanical interlocking will not protect form C contacts used for transfer operations.

Figure 2 illustrates polarity reversal of a load by form C contacts. If a contact arc persists for the operate or release time of the relay, the power supply is short circuited.

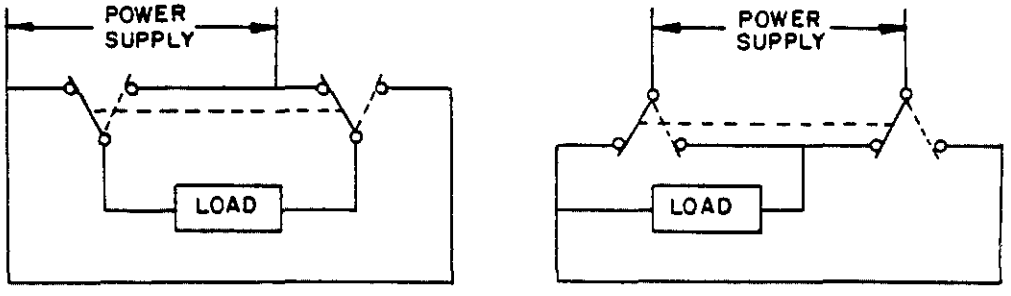

FIGURE 2. Polarity reversal, form C contacts.

b. Failures can be reduced by using either three-position relays with form K contacts or separate relays mechanically interlocked. Electrical interlocking of each coil is an accepted circuit design practice with either option.

Figure 3 illustrates polarity reversal of a load by form K contacts. Interlocking can be used effectively to protect the form K contacts. Time required to complete transfer of contacts can be increased to assure that contact arcing has been extinguished.

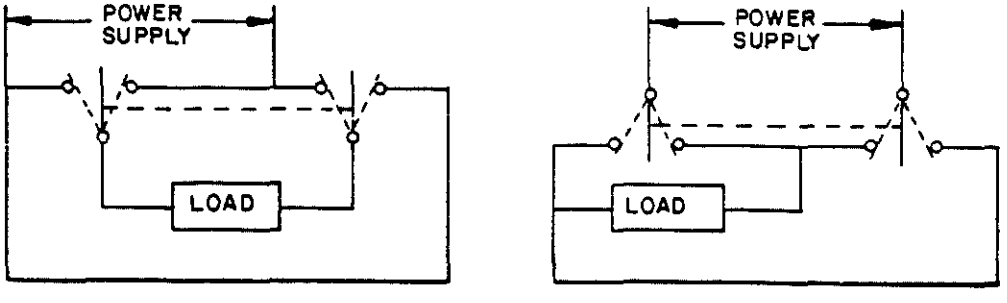

FIGURE 3. Polarity reversal, form K contacts.

Downloaded from http://www.everyspec.com

c. Particularly during the transfer of a load from one source to another there are additional potential pitfalls to be considered. These do not necessarily damage the relays used for the transfer:

(1) High currents circulating between sources if the two sources are interconnected during the transfer operation.

(2) High currents circulating between the load and a source.

(3) High mechanical stress of rotating equipment (Lenz's law).

(4) Secondary effects of the first three, for example: High field voltage, voltage regulation, hunting by regulators and governors.

d. With ac sources feeding rotating machines, the following recommendations are made:

(1) If the load is a synchronous motor, it will accelerate to lock in with the source frequency. Likewise, the synchronous machines used as sources will tend to synchronize if they are interconnected. The transient voltages, currents, and torques are usually high, depending on the designs and mechanical and electrical couplings involved, especially if the transfer between sources takes place when the source voltages are out of synchronization so that motors will suddenly accelerate (or decelerate) into step.

(2) If the load is an induction motor, care should be exercised to assure that the frequency to which the motor is transferred is no less than the frequency minus slip; otherwise the motor would be severely braked as it performs as an asynchronous generator, with resultant mechanical and electrical transients.

(3) When ac circuits are switched, consideration should be given to detrimental effects on the loads and/or the generators. The proper functioning of the relay is important, but no more important than the damage to associated equipment.

e. When switching ac circuits, relay contacts should be adequately rated for twice normal voltage to accommodate out-of-phase switching; also, inrush current considerations should be up to four times those expected when energizing the load.

6.2.3 Multiple relay operation. When more contacts are required than are practical on a single relay, multiple relays must be used. When this is necessary, cascading (see figure 4) rather than paralleling (see figure 5) should be considered. A contact on the first relay is used to energize the second; a contact on the second is used to energize the third. Each relay is energized in turn by a contact on the preceding relay in the string. A contact on the last relay is used as the interlock or holding contact of the entire array.

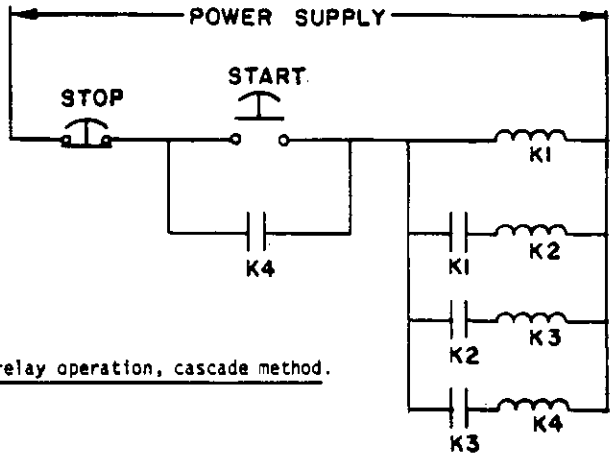

FIGURE 4. Concurrent relay operation, cascade method.

Downloaded from http://www.everyspec.com

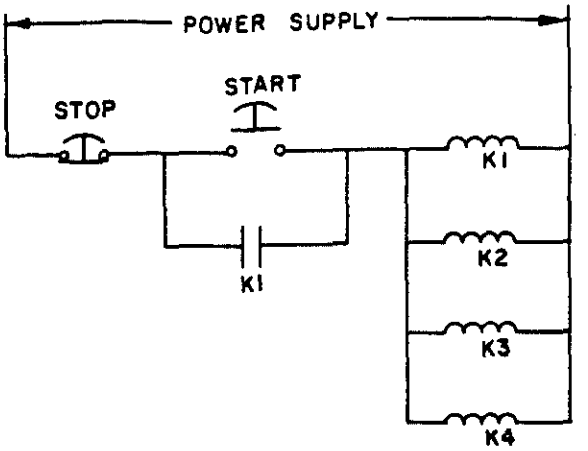

FIGURE 5. Concurrent relay operation, parallel method.

6.2.4 Coil transient suppression. Voltage induced in relay coils can cause arcing at the contacts that control the relay. Spikes in the transient induced voltage may result in electromagnetic interference. Several methods are available to cope with these problems. Nearly all of them slow the armature dropout and result in increased release time. Furthermore, the hammer blow necessary to break tack welds will be lacking. A way to suppress the coil and retain the fast break away and the hammer blow is by using back to back zener diodes or a zener diode and a blocking diode. The latter is less desirable because the relay coil is now polarity sensitive.

6.2.4.1 Diode shunts. The transient voltage spike developed by one relay coil may be reduced by using a diode shunt but the contacts of that relay may suffer decreased life. When two or more relay coils are in parallel, a diode across one affects the operation of the others; also, the inductive voltage spikes from other paralleled relay coils will discharge through and may destroy any shunt diodes.

6.3 Relay contact configurations. An important consideration for relay application is the contact arrangement required. The contact arrangement is the various combinations of different basic contact forms that make up the entire relay switching structure. Relay contact notations are given in the following order:

a. Poles - Each movable contact and its associated normally open and normally closed contacts of a relay constitutes a pole of the relay.

b. Throws:

(1) Single throw (ST) - Normally open and normally closed contacts.

(2) Double throw (DT) - Transfer (form C or Z) contacts are a combination of two stationary contacts and a movable contact that engages one of the stationary contacts when the coil is energized and engages the other when the coil is unenergized.

c. Normal position - A combination of a stationary contact and a movable contact that are engaged when the coil is unenergized is referred to as back, break, form B, or normally closed contacts (NC). A combination of a stationary contact and a movable contact that are engaged when the coil is energized is referred to as front, make, form A or normally open contacts (NO).

Downloaded from http://www.everyspec.com

d. Double break (DB) - A combination in which a movable contact simultaneously makes and simultaneously breaks connection between two stationary contacts. All contacts are single break except when noted as double break. Example: DPST NCDB designates double pole, single throw, normally closed, double-break contacts.

e. Multiple combinations: Relays having several sets of differently functioning contacts will have the contact forms listed in alphabetical order of their letter symbols as shown on figure 6; for example; 1B3C refers to SPST NC contacts and 3PDT contacts. For a relay on which the moving contact engages more than two stationary contacts during its cycle of operation, the contact arrangement is described as MPNT, when M is the number of poles and N is the number of throws, for example 8P2DT.

6.4 Relay misapplication. Relays, typically electromechanical devices, are subject to both electrical and mechanical failure. Some causes of failure are poor contact alignment; open, contaminated, or pitted contacts; loss of resiliency in springs; open coils. Contact failure can result from high inrush or sustained high currents, or from arcing when an inductive circuit is opened. High inrush currents occur in loads composed of motors, lamps, heaters, capacitive input filters, transformers, magnetization current, or other devices that have low starting impedance compared to operating impedance. However, the greatest cause of relay failure is due to misapplication. Circuit design resulting in relay failures is not advocated as sound engineering practice. However, that condition would be preferred to having equipment fail due to relay misapplication, with the actual circuit culprit possibly remaining unscathed. Such failure may well be past the time of facile correction when, and if, the actual cause is determined. Detection of the actual cause of the trouble may be elusive in such instances. Early failures due to a relay misapplication in which the relay itself is damaged are more easily analyzed. The following are typical relay misapplications which may lead to relay failures.

a. CAUTION: The use of any coil voltage less than the rated coil voltage will compromise the operation of the relays.

b. Improperly using existing military specifications by erroneous interpretation or even using the incorrect specification altogether. A given set or sets of conditions are given in the specifications. Variations from these conditions will affect performance of the relay accordingly.

c. Paralleling contacts to increase capacity. Contacts will not make or break simultaneously and one contact carries all the load under the worst conditions. Contacts can be paralleled for reliability in the low level or intermediate current (minimum current) areas.

d. Circuit transient surges. Circuit designers must not expect relays to handle circuit transient surges in excess of their ratings.

e. Using relays under load conditions for which ratings have not been established. Contact ratings should be established for each type of load. Many relays will work from low level to rated load; however, the relay should not be expected to do both. Many relays possess high level and low level load capabilities; however, relays previously tested or used at high level loads shall not be used for low level load applications. High capacitive inrush currents and inductive break currents require oversized contacts. A cold filament lamp draws very high currents until warmed up. Contacts that switch lamps must be able to take the inrush current.

f. Using relays on higher voltages than those for which they were designed, for example, switching 300-volt power supplies with relays only rated 115 volts maximum.

Downloaded from http://www.everyspec.com

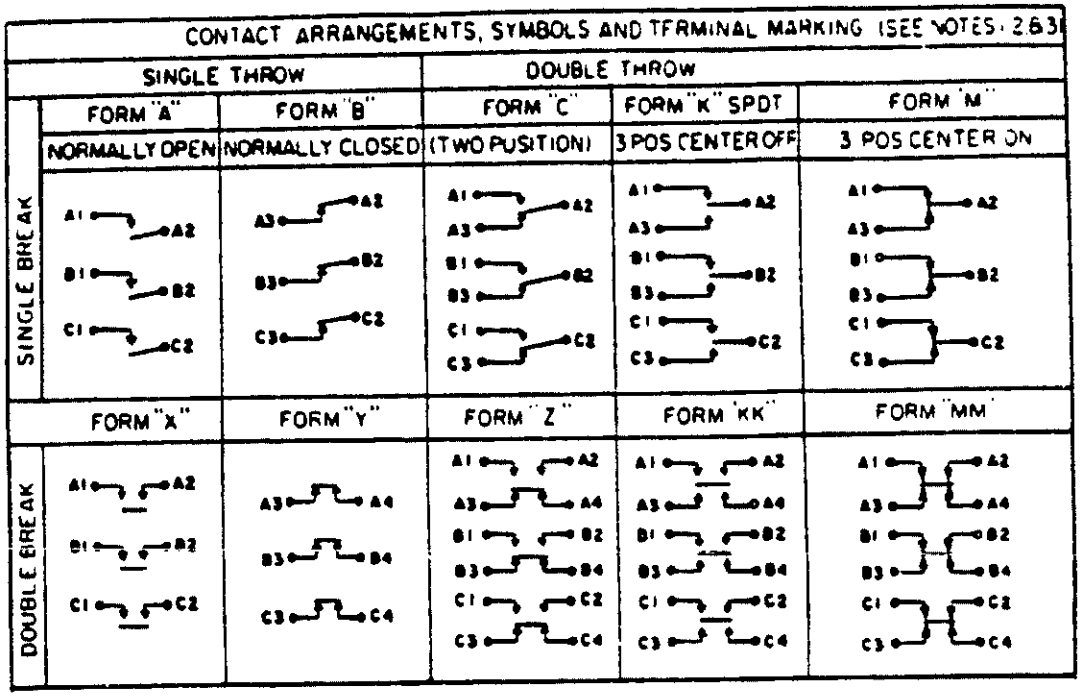

Symbols and marking for terminals

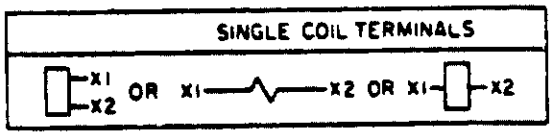

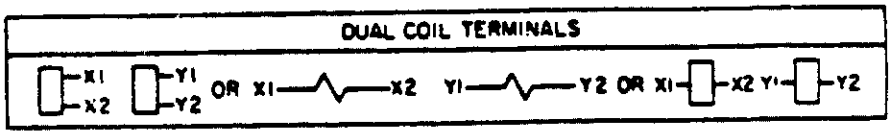

FIGURE 6. Symbols and markings for contacts and coils.

Downloaded from http://www.everyspec.com

OTHER CONTACT ARRANGEMENTS AND SYMBOLS (SEE NOTES 1 & 4)

FORM	DESCRIPTION	SYMBOL	FORM	DESCRIPTION	SYMBOL
D	Make, Break or Make-Before-Break, or SPDT (M-B), or "Continuity transfer"	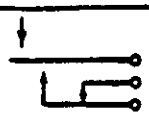	J	Make, Make, Break, or SPST (M-M-B)	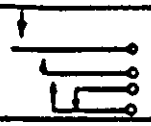
E	Break, Make, Break, or Break-Make-Before-Break, or SPDT (B-M-B)	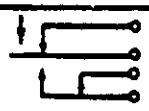	L	Break, Make, Make, or SPST (B-M-M)	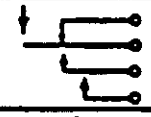
F	Make, Make SPST (M-M)	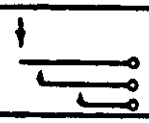	U	Double make, Contact on Arm SP ST NO DM	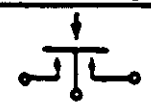
G	Break, Break or SPST (B-B)		V	Double break, Contact on Arm, SP ST NC DB	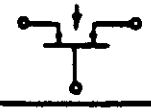
H	Break, Break, Make, or SPST (B-B-M)	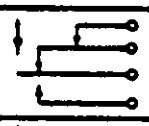	W	Double break, Double make, Contact on Arm, ST DT NC-NO (DB-DM)	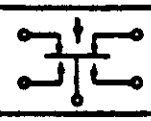
I	Make, Break, Make, or SPST (M-B-M)	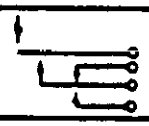			

NOTES:
1. Symbols are in accordance with ANSI Y32.2.
2. As a result of coil energization, the open and closed positions are as follows:

Coil energized	FORM	
	A, B, C, K and M	X, Y, Z, KK and MM
X1 and X2	1 & 2 Closed	1 & 2 Closed
	2 & 3 Open	3 & 4 Open
Y1 and Y2 (if applicable)	1 & 2 Open	1 & 2 Open
	2 & 3 Closed	3 & 4 Closed

3. Contacts are shown with the coil(s) de-energized; however, contacts of latching relays remain in the position attained as the result of the last coil energization.
4. Forms A, B, C, K, M, X, Y, Z, KK and MM are as previously shown.
5. The arrow in the symbol indicates the direction of motion of the moving contact in response to energization of the relay winding.

FIGURE 6. Symbols and markings for contacts and coils - Continued.

Downloaded from http://www.everyspec.com

g. Contact ratings with grounded case. Some relays, with small internal spacing or lack of arc barriers, when switching in excess of 40 volts (ac or dc) with grounded case, must have the contact ratings significantly lower than in the ungrounded case mode of operation. Typically, the maximum ac rating of such a nominally rated 28 V dc, 2 amperes resistive relay, is of the order of 0.150 ampere. Relays with sufficient spacing or arc barriers may be used at full rating at voltages over 40 volts (ac or dc) or 115/200 V, 3-phase ac 400 Hz with case grounded when so rated in the detail specification or MS standard. Switching high voltage with the relay case ungrounded results in a potential hazard to personnel.

h. Transferring load between unsynchronized power supplies with inadequately rated contacts. When the load is switched, the voltages can range from being in-phase to 180° out-of-phase; therefore, the relay contact voltage may vary from zero volts to two times peak voltage and maximum current.

i. Switching polyphase circuits with relays tested and rated for single phase only. A typical misapplication is the use of small multipole relays (whose individual contacts are rated for 115 volts single phase ac) in 115/200 volts three phase ac applications. Phase-to-phase shorting at rated loads is a strong possibility in these instances with potentially catastrophic results.

j. Using relays with no established motor ratings to switch motor loads. In addition, caution should be used in applying relays to reverse motors, particularly where the motor can be reversed while running, commonly called "plugging". This results in a condition where both voltage and current greatly exceed normal. Many power relays are rated for "plugging" and reversing service but a relay should not be utilized in potential "plugging" situations unless so rated by the manufacturer.

k. Using relays with no established intermediate current (minimum current) capabilities. It must not be assumed that because a relay is used in an application considerably below its rated contact load that the consideration of intermediate current capability can be ignored; this is especially true if there is no established level of intermediate current for the relay.

l. Using relays rated for 115 V ac only on 28 V dc or higher voltage dc applications. If contacts in these devices are of the single break form A type, it may be necessary to derate severely for use on dc applications, at 28 volts or higher.

m. Effects of ambient temperature and coil temperature rise (I^2R heating) on coil overdrive. Many users do not consider that more power is required to operate a relay at elevated temperatures and are surprised to find that they have marginal operation at elevated temperatures. A relay, a current operated device (ampere-turns), increases its coil resistance at the rate of 0.004 ohm/ohm/°C due to the temperature coefficient of copper. Therefore, with a given voltage applied to a relay coil, overdrive decreases at elevated temperatures; if this is not taken into account, misapplication occurs. When rated voltage is specified instead of current, an ambient temperature is usually specified and the user must consider the maximum ambient temperature condition and the effect upon the voltage that must be supplied.

n. Relay race involves conditions where, for proper operation, one relay must operate prior to another in separate drive circuits. Relay race circuits should be avoided; but where they must be used, ambient temperature drive power, operate and release times, coil suppression circuitry, and wear consideration must be made carefully.

Downloaded from http://www.everyspec.com

o. Another less common problem is encountered when a relay coil is operated from a slowly rising current. When conditions are right, the relay operates at some point during the increasing drive current. Back electromotive forces (EMF's) are produced when the armature closes to the pole face. This voltage being opposite in polarity to the driving voltage causes the relay to release and then reoperate. This condition prevails until a sufficient amount of drive current is available to overcome the back EMF's.

p. Relays rated for 400 Hz and not rated for 50/60 Hz should not be used at 50/60 Hz.

q. Using relays to switch inductive loads. While ac inductive circuit requirements and relay capabilities can be properly matched in terms of current, voltage, frequency, and power factor, no such positive comparison method exists for dc inductive circuits. Thus, special care must be exercised in selecting relays to switch dc inductive loads.

r. Using coil transient suppression relays where suppression is not required. Suppressing coil transients can affect load switching capability and relay life. Using maximum possible suppression will increase relay dropout time. Increased dropout time can reduce the amount of current that can be switched and the relay life. Increased dropout time can also adversely offset relay logic circuits.

s. Coil voltage is the voltage across the relay coil terminals. Voltage drops that occur in control circuits, series diodes, control transistors, long wires, etc. must be taken into account by the user.

t. Contact load affect on coil voltage. In applications where energizing a high current load or a load with high inrush current that affects coil voltage, the user must consider the possibility of relay chatter, rapid make and break cycling, with attendant damage and loss of contact life.

Downloaded from http://www.everyspec.com

7. SYMBOLS

7.1 Temperature class. The temperature class is identified by a single letter in accordance with table I.

TABLE I. Temperature class.

Symbol	Operating ambient temperature range (°C)
A	-55 to +85
B	-65 to +125
C	-65 to +200
D	-55 to +71
E	-65 to +85
F	0 to +70
G	-70 to +125
H	-70 to +200
J	-55 to +125

7.2 Shock. The shock is identified by a single digit in accordance with table II.

TABLE II. Shock.

Symbol	MIL-STD-202 method 213 test condition	Applicable test method of MIL-STD-202
1	A (50G)	213
2	B (75G)	213
3	C (100G)	213
5	---	207 (high impact)
6	(200G)	(6 ±1 ms pulse duration)
7	D (500G)	213
8	E (150G)	213 (11 ±1 ms half-sine wave)
9	F (1100G)	213

NOTE: Symbols 1, 2, and 3 replace 15, 30, and 50 G of methods 202 and 205 of MIL-STD-202.

Downloaded from http://www.everyspec.com

7.3 Vibration characteristic. The vibration characteristic is identified by a single digit in accordance with table III.

TABLE III. Vibration characteristic.

Symbol	Acceleration value	Vibration condition (hertz)
1	2 (G)	10 - 500
2	".060 dbl amptd"	10 - 55
3	10 (G)	10 - 500
4	10 (G)	10 - 1,500
5	15 (G)	10 - 2,000
6	20 (G)	10 - 2,000
7	20 (G)	10 - 3,000
8	30 (G)	10 - 2,000
9	30 (G)	10 - 3,000
10	50 (G)	10 - 3,000
11	5 (G)	10 - 2,000
12	10 (G)	10 - 2,000
13	10 (G)	55 - 2,000
14	".060 dbl amptd"	10 - 80

NOTE: Use .060 double amplitude whenever it is less than the curve "G" level.

7.4 Terminal. The style of terminal is identified by a single or double letter in accordance with table IV.

TABLE IV. Terminal.

Symbol	Style of terminal
L	Lug (solder hooks)
SKP	Socket pin/plug in
STUD	Stud
SP	Wirelead, Solder Pin
WL	Wire Lead
.500	Lead (TO-5)
.187	Lead (TO-5)

7.5 Failure rate level. The specified failure rate level is identified by a single letter in accordance with table V.

TABLE V. Failure rate level (established at a 90-percent confidence level for qualification and a 60 percent confidence level for maintenance of qualification).

MIL-R-39016, MIL-R-28776		MIL-R-6106	
Symbol	Failure rate level (% 10,000 operations)	Symbol	Failure rate level (% 10,000 operations)
L	3.0	M	1.0
M	1.0	U	0.5
P	0.1	X	0.3
R	0.01	P	0.1
S	0.001		

Downloaded from http://www.everyspec.com

8. SUPPLEMENTAL INFORMATION

8.1 Drawing notes.

8.1.1 Dimensions are in inches.

8.1.2 Metric equivalents. Metric equivalents provided on each drawing are for general information only.

8.1.3 Tolerance. Unless otherwise specified, tolerance is ±.010 (0.25 mm).

8.2 Technical information. Questions on the suitability of a particular application (when the suitability or capability of a relay is in question) should be referred to the Military Parts Control Advisory Group at the following address:

Commander
Defense Electronics Supply Center
ATTN: DESC-EMD
Dayton, Ohio 45444

Telephone: 513-296-6180
Autovon: 986-6180

Custodians:
Army - ER
Navy - EC
Air Force - 11

Review activities:
Army - MI, AR, AT, AV
Air Force - 17, 85
DLA - ES

User activities:
Army - ME
Navy - AS, MC, YD, OS, SH

Agent:
DLA - ES

Preparing activity:
Navy - EC

(Project 5945-0590)

Downloaded from http://www.everyspec.com

SECTION 100

RELAYS, ELECTROMAGNETIC (EM), ESTABLISHED RELIABILITY (ER)

Subsection

101 Relays, EM, ER, dc operated.

102 Relays, EM, ER, ac operated.

103 Relays, EM, ER, sensitive, dc operated.

104 Relays, EM, ER, latching, dc operated.

105 Relays, EM, ER, latching, sensitive, dc operated.

106 Relays, EM, ER, radio frequency (coaxial) dc operated.

Downloaded from http://www.everyspec.com

SUBSECTION 101

RELAYS, ELECTROMAGNETIC (EM), ESTABLISHED RELIABILITY (ER), DC OPERATED

(Applicable specifications: MIL-R-6106 and MIL-R-39016)

SCOPE: This subsection covers relays with coils dc voltage rated.

SUBSECTION 101

RELAYS, ELECTROMAGNETIC (EM), ESTABLISHED RELIABILITY (ER), DC OPERATED

(Applicable specifications: MIL-R-6106 and MIL-R-39016)

Duty cycle: Continuous
Enclosure: Hermetic
Operating temperature range: B (MIL-R-39016; G (MIL-R-6106) (see table I)

TABLE 101.I. Relays, EM, ER, dc operated, part numbers and characteristics.

Rated coil voltage	Part number 1/	Figure number	Shock (see table II)	Vibration (see table III)	System voltage and frequency - contact current in amperes																				Terminal style (see table IV)
					28 V dc				400 Hz								50/60 Hz								
									115 V 1-phase				115/200 V 3-phase				115 V 1 phase				115/200 V 3-phase				
					Resistive	Inductive	Motor	Lamp	Resistive	Inductive	Motor	Lamp	Resistive	Inductive	Motor	Lamp	Resistive	Inductive	Motor	Lamp	Resistive	Inductive	Motor	Lamp	
SPOT CONTACTS - 1 FORM C																									
	M39016/7 2/																								
5.0	-014Z	101-1	2	9	1.0	0.2	---	0.1	0.1	---	---	---	---	---	---	---	0.1	---	---	---	---	---	---	---	.187
5.0	-025Z	"	"	"	"	"	"	"	"	"	"	"	"	"	"	"	"	"	"	"	"	"	"	"	.500
6.0	-016Z	"	"	"	"	"	"	"	"	"	"	"	"	"	"	"	"	"	"	"	"	"	"	"	.187
6.0	-026Z	"	"	"	"	"	"	"	"	"	"	"	"	"	"	"	"	"	"	"	"	"	"	"	.500
9.0	-018Z	"	"	"	"	"	"	"	"	"	"	"	"	"	"	"	"	"	"	"	"	"	"	"	.187
9.0	-027Z	"	"	"	"	"	"	"	"	"	"	"	"	"	"	"	"	"	"	"	"	"	"	"	.500
12.0	-020Z	"	"	"	"	"	"	"	"	"	"	"	"	"	"	"	"	"	"	"	"	"	"	"	.187
12.0	-028Z	"	"	"	"	"	"	"	"	"	"	"	"	"	"	"	"	"	"	"	"	"	"	"	.500
18.0	-022Z	"	"	"	"	"	"	"	"	"	"	"	"	"	"	"	"	"	"	"	"	"	"	"	.187
18.0	-029Z	"	"	"	"	"	"	"	"	"	"	"	"	"	"	"	"	"	"	"	"	"	"	"	.500
26.5	-024Z	"	"	"	"	"	"	"	"	"	"	"	"	"	"	"	"	"	"	"	"	"	"	"	.187
26.5	-030Z	"	"	"	"	"	"	"	"	"	"	"	"	"	"	"	"	"	"	"	"	"	"	"	.500
	M6106/19 Conf A																								
28.0	-005 3/	101-2	6	"	25	12	10	5	25	15	10	5	"	"	"	"	---	"	"	"	"	"	"	"	SP
"	-006 3/	"	"	"	"	"	"	"	"	"	"	"	"	"	"	"	"	"	"	"	"	"	"	"	L
"	-007 3/	"	"	"	"	"	"	"	"	"	"	"	"	"	"	"	"	"	"	"	"	"	"	"	SKP
	Conf B																								
"	-008 3/	"	"	"	"	"	"	"	"	"	"	"	"	"	"	"	"	"	"	"	"	"	"	"	SP
"	-009 3/	"	"	"	"	"	"	"	"	"	"	"	"	"	"	"	"	"	"	"	"	"	"	"	L

See footnotes at end of table.

Downloaded from http://www.everyspec.com

TABLE 101.I. Relays, EM, ER, dc operated, part numbers and characteristics - Continued.

Rated coil voltage	Part number 1/	Figure number	Shock (see table II)	Vibration (see table III)	System voltage and frequency - contact current in amperes																				Terminal style (see table IV)
					28 V dc				400 Hz								50/60 Hz								
									115 V 1-phase				115/200 V 3-phase				115 V 1 phase				115/200 V 3-phase				
					Resis-tive	Induc-tive	Motor	Lamp	Resis-tive	Induc-tive	Motor	Lamp	Resis-tive	Induc-tive	Motor	Lamp	Resis-tive	Induc-tive	Motor	Lamp	Resis-tive	Induc-tive	Motor	Lamp	
SPDT CONTACTS - 1 FORM C - WITH COIL SUPPRESSION																									
	M6106/19 Conf A																								
28.0	-020 3/	101-3	6	9	25	12	10	5	25	15	10	5	---	---	---	---	---	---	---	---	---	---	---	---	SP
"	-021 3/	"	"	"	"	"	"	"	"	"	"	"	"	"	"	"	"	"	"	"	"	"	"	"	L
"	-022 3/	"	"	"	"	"	"	"	"	"	"	"	"	"	"	"	"	"	"	"	"	"	"	"	SKP
	Conf B																								
"	-023 3/	"	"	"	"	"	"	"	"	"	"	"	"	"	"	"	"	"	"	"	"	"	"	"	SP
"	-024 3/	"	"	"	"	"	"	"	"	"	"	"	"	"	"	"	"	"	"	"	"	"	"	"	L
SPDT CONTACTS - 1 FORM C - WITH DIODE COIL TRANSIENT SUPPRESSION																									
	M39016/23 2/																								
5.0	-019Z	101-4	2	9	1.0	0.2	---	0.1	0.1	---	---	---	---	---	---	---	0.1	---	---	---	---	---	---	---	.187
5.0	-025Z	"	"	"	"	"	"	"	"	"	"	"	"	"	"	"	"	"	"	"	"	"	"	"	.500
6.0	-020Z	"	"	"	"	"	"	"	"	"	"	"	"	"	"	"	"	"	"	"	"	"	"	"	.187
6.0	-026Z	"	"	"	"	"	"	"	"	"	"	"	"	"	"	"	"	"	"	"	"	"	"	"	.500
9.0	-021Z	"	"	"	"	"	"	"	"	"	"	"	"	"	"	"	"	"	"	"	"	"	"	"	.187
9.0	-027Z	"	"	"	"	"	"	"	"	"	"	"	"	"	"	"	"	"	"	"	"	"	"	"	.500
12.0	-022Z	"	"	"	"	"	"	"	"	"	"	"	"	"	"	"	"	"	"	"	"	"	"	"	.187
12.0	-028Z	"	"	"	"	"	"	"	"	"	"	"	"	"	"	"	"	"	"	"	"	"	"	"	.500
18.0	-023Z	"	"	"	"	"	"	"	"	"	"	"	"	"	"	"	"	"	"	"	"	"	"	"	.187
18.0	-029Z	"	"	"	"	"	"	"	"	"	"	"	"	"	"	"	"	"	"	"	"	"	"	"	.500
26.5	-024Z	"	"	"	"	"	"	"	"	"	"	"	"	"	"	"	"	"	"	"	"	"	"	"	.187
26.5	-030Z	"	"	"	"	"	"	"	"	"	"	"	"	"	"	"	"	"	"	"	"	"	"	"	.500

See footnotes at end of table.

Downloaded from http://www.everyspec.com

TABLE 101.I. Relays, EM, ER, dc operated, part numbers and characteristics - Continued.

Rated coil voltage	Part number 1/	Figure number	Shock (see table II)	Vibration (see table III)	System voltage and frequency - contact current in amperes																				Terminal style (see table IV)
					28 V dc				400 Hz								50/60 Hz								
									115 V 1-phase				115/200 V 3-phase				115 V 1 phase				115/200 V 3-phase				
					Resistive	Inductive	Motor	Lamp	Resistive	Inductive	Motor	Lamp	Resistive	Inductive	Motor	Lamp	Resistive	Inductive	Motor	Lamp	Resistive	Inductive	Motor	Lamp	
SPDT CONTACTS - 1 FORM C - WITH DIODE COIL TRANSIENT SUPPRESSION AND POLARITY REVERSAL PROTECTION																									
	M39016/24 2/																								
5.0	-019Z	101-5	2	9	1.0	0.2	---	0.1	0.1	---	---	---	---	---	---	---	0.1	---	---	---	---	---	---	---	.187
5.0	-025Z	"	"	"	"	"	"	"	"	"	"	"	"	"	"	"	"	"	"	"	"	"	"	"	.500
6.0	-020Z	"	"	"	"	"	"	"	"	"	"	"	"	"	"	"	"	"	"	"	"	"	"	"	.187
6.0	-026Z	"	"	"	"	"	"	"	"	"	"	"	"	"	"	"	"	"	"	"	"	"	"	"	.500
9.0	-021Z	"	"	"	"	"	"	"	"	"	"	"	"	"	"	"	"	"	"	"	"	"	"	"	.187
9.0	-027Z	"	"	"	"	"	"	"	"	"	"	"	"	"	"	"	"	"	"	"	"	"	"	"	.500
12.0	-022Z	"	"	"	"	"	"	"	"	"	"	"	"	"	"	"	"	"	"	"	"	"	"	"	.187
12.0	-028Z	"	"	"	"	"	"	"	"	"	"	"	"	"	"	"	"	"	"	"	"	"	"	"	.500
18.0	-023Z	"	"	"	"	"	"	"	"	"	"	"	"	"	"	"	"	"	"	"	"	"	"	"	.187
18.0	-029Z	"	"	"	"	"	"	"	"	"	"	"	"	"	"	"	"	"	"	"	"	"	"	"	.500
26.5	-024Z	"	"	"	"	"	"	"	"	"	"	"	"	"	"	"	"	"	"	"	"	"	"	"	.187
26.5	-030Z	"	"	"	"	"	"	"	"	"	"	"	"	"	"	"	"	"	"	"	"	"	"	"	.500
DPDT CONTACTS - 2 FORM C																									
	M39016/6 2/ Flange B																								
5.0	-132Z	101-6	3	9	2.0	0.75	---	0.16	0.3	---	---	---	---	---	---	---	0.3	---	---	---	---	---	---	---	L
"	-133Z	"	"	"	"	"	"	"	"	"	"	"	"	"	"	"	"	"	"	"	"	"	"	"	SP
	Flange C																								
"	-135Z	"	"	"	"	"	"	"	"	"	"	"	"	"	"	"	"	"	"	"	"	"	"	"	L
"	-136Z	"	"	"	"	"	"	"	"	"	"	"	"	"	"	"	"	"	"	"	"	"	"	"	SP
	No mount																								
"	-138Z	"	"	"	"	"	"	"	"	"	"	"	"	"	"	"	"	"	"	"	"	"	"	"	L
"	-139Z	"	"	"	"	"	"	"	"	"	"	"	"	"	"	"	"	"	"	"	"	"	"	"	SP

See footnotes at end of table.

Downloaded from http://www.everyspec.com

TABLE 101.1. Relays, EM, ER, dc operated, part numbers and characteristics - Continued.

Rated coil voltage	Part number 1/	Figure number	Shock (see table II)	Vibration (see table III)	System voltage and frequency - contact current in amperes																				Terminal style (see table IV)
					28 V dc				400 Hz								50/60 Hz								
									115 V 1-phase				115/200 V 3-phase				115 V 1 phase				115/200 V 3-phase				
					Resistive	Inductive	Motor	Lamp	Resistive	Inductive	Motor	Lamp	Resistive	Inductive	Motor	Lamp	Resistive	Inductive	Motor	Lamp	Resistive	Inductive	Motor	Lamp	
DPDT CONTACTS - 2 FORM C - Continued																									
	M39016/9 1/																								
5.0	-019Z	101-7	2	9	1.0	0.2	---	0.1	0.1	---	---	---	---	---	---	---	0.1	---	---	---	---	---	---	---	.187
"	-043Z	101-7	"	"	"	"	"	"	"	"	"	"	"	"	"	"	"	"	"	"	"	"	"	"	.187
"	-057Z	101-7	"	"	"	"	"	"	"	"	"	"	"	"	"	"	"	"	"	"	"	"	"	"	.500
"	-064Z	101-7	"	"	"	"	"	"	"	"	"	"	"	"	"	"	"	"	"	"	"	"	"	"	.500
	M39016/13 2/																								
	Flange A																								
"	-092Z	101-8	3	"	2.0	0.3	"	"	.125	"	"	"	"	"	"	"	.125	"	"	"	"	"	"	"	SP
"	-093Z	"	"	"	"	"	"	"	"	"	"	"	"	"	"	"	"	"	"	"	"	"	"	"	L
"	-094Z	"	"	"	"	"	"	"	"	"	"	"	"	"	"	"	"	"	"	"	"	"	"	"	WL
	Flange B																								
"	-095Z	"	"	"	"	"	"	"	"	"	"	"	"	"	"	"	"	"	"	"	"	"	"	"	SP
"	-096Z	"	"	"	"	"	"	"	"	"	"	"	"	"	"	"	"	"	"	"	"	"	"	"	L
"	-097Z	"	"	"	"	"	"	"	"	"	"	"	"	"	"	"	"	"	"	"	"	"	"	"	WL
	No mount																								
"	-073Z	"	"	"	"	"	"	"	"	"	"	"	"	"	"	"	"	"	"	"	"	"	"	"	SP
"	-079Z	"	"	"	"	"	"	"	"	"	"	"	"	"	"	"	"	"	"	"	"	"	"	"	WL
"	-098Z	"	"	"	"	"	"	"	"	"	"	"	"	"	"	"	"	"	"	"	"	"	"	"	L
	M39016/17 2/																								
"	-025Z	101-9	2	"	1.0	0.2	"	"	0.1	"	"	"	"	"	"	"	0.1	"	"	"	"	"	"	"	.187
"	-031Z	101-9	2	"	1.0	0.2	"	"	0.1	"	"	"	"	"	"	"	0.1	"	"	"	"	"	"	"	.500
	M39016/6 2/																								
	Flange B																								
6.0	-118Z	101-6	3	"	2.0	0.75	"	0.16	0.3	"	"	"	"	"	"	"	0.3	"	"	"	"	"	"	"	L
"	-119Z	"	"	"	"	"	"	"	"	"	"	"	"	"	"	"	"	"	"	"	"	"	"	"	SP
	Flange C																								
"	-121Z	"	"	"	"	"	"	"	"	"	"	"	"	"	"	"	"	"	"	"	"	"	"	"	L
"	-127Z	"	"	"	"	"	"	"	"	"	"	"	"	"	"	"	"	"	"	"	"	"	"	"	SP
	No mount																								
"	-123Z	"	"	"	"	"	"	"	"	"	"	"	"	"	"	"	"	"	"	"	"	"	"	"	SP
"	-131Z	"	"	"	"	"	"	"	"	"	"	"	"	"	"	"	"	"	"	"	"	"	"	"	L

See footnotes at end of table.

Downloaded from http://www.everyspec.com

TABLE 101.I. Relays, EM, ER, dc operated, part numbers and characteristics - Continued.

Rated coil voltage	Part number 1/	Figure number	Shock (see table II)	Vibration (see table III)	System voltage and frequency - contact current in amperes																				Terminal style (see table IV)
					28 V dc				400 Hz								50/60 Hz								
									115 V 1-phase				115/200 V 3-phase				115 V 1 phase				115/200 V 3-phase				
					Resistive	Inductive	Motor	Lamp	Resistive	Inductive	Motor	Lamp	Resistive	Inductive	Motor	Lamp	Resistive	Inductive	Motor	Lamp	Resistive	Inductive	Motor	Lamp	
DPDT CONTACTS - 2 FORM C - Continued																									
	M39016/9 2/																								
6.0	-020Z	101-7	2	9	1.0	0.2	---	0.1	0.1	---	---	---	---	---	---	---	0.1	---	---	---	---	---	---	---	.187
"	-058Z	101-7	"	"	"	"	"	"	"	"	"	"	"	"	"	"	"	"	"	"	"	"	"	"	.500
"	-044Z	101-7	"	"	"	"	"	"	"	"	"	"	"	"	"	"	"	"	"	"	"	"	"	"	.187
"	-065Z	101-7	"	"	"	"	"	"	"	"	"	"	"	"	"	"	"	"	"	"	"	"	"	"	.500
	M39016/13 2/																								
	No mount																								
"	-055Z	101-8	3	"	2.0	0.3	"	"	0.125	"	"	"	"	"	"	"	0.125	"	"	"	"	"	"	"	SP
"	-074Z	"	"	"	"	"	"	"	"	"	"	"	"	"	"	"	"	"	"	"	"	"	"	"	WL
"	-089Z	"	"	"	"	"	"	"	"	"	"	"	"	"	"	"	"	"	"	"	"	"	"	"	L
	Flange A																								
"	-058Z	"	"	"	"	"	"	"	"	"	"	"	"	"	"	"	"	"	"	"	"	"	"	"	L
"	-061Z	"	"	"	"	"	"	"	"	"	"	"	"	"	"	"	"	"	"	"	"	"	"	"	WL
"	-099Z	"	"	"	"	"	"	"	"	"	"	"	"	"	"	"	"	"	"	"	"	"	"	"	SP
	Flange B																								
"	-064Z	"	"	"	"	"	"	"	"	"	"	"	"	"	"	"	"	"	"	"	"	"	"	"	L
"	-067Z	"	"	"	"	"	"	"	"	"	"	"	"	"	"	"	"	"	"	"	"	"	"	"	WL
"	-070Z	"	"	"	"	"	"	"	"	"	"	"	"	"	"	"	"	"	"	"	"	"	"	"	SP
	M39016/17 2/																								
"	-026Z	101-9	2	"	1.0	0.2	"	"	0.1	"	"	"	"	"	"	"	0.1	"	"	"	"	"	"	"	.187
"	-032Z	101-9	2	"	"	"	"	"	0.1	"	"	"	"	"	"	"	0.1	"	"	"	"	"	"	"	.500
	M39016/34 2/																								
	Bracket																								
"	-001Z	101-10	3	6	"	"	"	---	---	"	"	"	"	"	"	"	---	"	"	"	"	"	"	"	WL
	No mount																								
"	-002Z	"	"	"	"	"	"	"	"	"	"	"	"	"	"	"	"	"	"	"	"	"	"	"	SP
"	-010Z 4/	"	"	"	"	"	"	"	"	"	"	"	"	"	"	"	"	"	"	"	"	"	"	"	SKP
	Tab mount																								
"	-003Z	"	"	"	"	"	"	"	"	"	"	"	"	"	"	"	"	"	"	"	"	"	"	"	SP
	Flange mount																								
"	-013Z 4/	"	"	"	"	"	"	"	"	"	"	"	"	"	"	"	"	"	"	"	"	"	"	"	SKP

See footnotes at end of table.

2D7 22560

Downloaded from http://www.everyspec.com

TABLE 101.I. Relays, EM, ER, dc operated, part numbers and characteristics - Continued.

Rated coil voltage	Part number 1/	Figure number	Shock (see table II)	Vibration (see table III)	System voltage and frequency - contact current in amperes																				Terminal style (see table IV)
					28 V dc				400 Hz								50/60 Hz								
									115 V 1-phase				115/200 V 3-phase				115 V 1 phase				115/200 V 3-phase				
					Resis-tive	Induc-tive	Motor	Lamp	Resis-tive	Induc-tive	Motor	Lamp	Resis-tive	Induc-tive	Motor	Lamp	Resis-tive	Induc-tive	Motor	Lamp	Resis-tive	Induc-tive	Motor	Lamp	
DPDT CONTACTS - 2 FORM C - Continued																									
	M39016/9 2/																								
9.0	-021Z	101-7	2	9	1.0	0.2	---	0.1	0.1	---	---	---	---	---	---	---	0.1	---	---	---	---	---	---	---	.187
"	-045Z	101-7	"	"	"	"	"	"	"	"	"	"	"	"	"	"	"	"	"	"	"	"	"	"	.187
"	-059Z	101-7	"	"	"	"	"	"	"	"	"	"	"	"	"	"	"	"	"	"	"	"	"	"	.500
"	-066Z	101-7	"	"	"	"	"	"	"	"	"	"	"	"	"	"	"	"	"	"	"	"	"	"	.500
	M39016/13 2/																								
	Flange A																								
"	-100Z	101-8	3	"	2.0	0.3	"	"	0.125	"	"	"	"	"	"	"	0.125	"	"	"	"	"	"	"	SP
"	-101Z	"	"	"	"	"	"	"	"	"	"	"	"	"	"	"	"	"	"	"	"	"	"	"	L
"	-102Z	"	"	"	"	"	"	"	"	"	"	"	"	"	"	"	"	"	"	"	"	"	"	"	WL
	Flange B																								
"	-103Z	"	"	"	"	"	"	"	"	"	"	"	"	"	"	"	"	"	"	"	"	"	"	"	SP
"	-104Z	"	"	"	"	"	"	"	"	"	"	"	"	"	"	"	"	"	"	"	"	"	"	"	L
"	-105Z	"	"	"	"	"	"	"	"	"	"	"	"	"	"	"	"	"	"	"	"	"	"	"	WL
	No mount																								
"	-106Z	"	"	"	"	"	"	"	"	"	"	"	"	"	"	"	"	"	"	"	"	"	"	"	L
"	-075Z	"	"	"	"	"	"	"	"	"	"	"	"	"	"	"	"	"	"	"	"	"	"	"	SP
"	-080Z	"	"	"	"	"	"	"	"	"	"	"	"	"	"	"	"	"	"	"	"	"	"	"	WL
	M39016/17 2/																								
"	-027Z	101-9	2	"	1.0	0.2	"	"	0.1	"	"	"	"	"	"	"	0.1	"	"	"	"	"	"	"	.187
"	-033Z	101-9	2	"	1.0	0.2	"	"	0.1	"	"	"	"	"	"	"	0.1	"	"	"	"	"	"	"	.500
	M39016/6 2/																								
	Flange B																								
12.0	-111Z	101-6	3	"	2.0	0.75	"	0.16	0.3	"	"	"	"	"	"	"	0.3	"	"	"	"	"	"	"	L
"	-112Z	"	"	"	"	"	"	"	"	"	"	"	"	"	"	"	"	"	"	"	"	"	"	"	SP
	Flange C																								
"	-114Z	"	"	"	"	"	"	"	"	"	"	"	"	"	"	"	"	"	"	"	"	"	"	"	L
"	-126Z	"	"	"	"	"	"	"	"	"	"	"	"	"	"	"	"	"	"	"	"	"	"	"	SP
	No mount																								
"	-116Z	"	"	"	"	"	"	"	"	"	"	"	"	"	"	"	"	"	"	"	"	"	"	"	L
"	-130Z	"	"	"	"	"	"	"	"	"	"	"	"	"	"	"	"	"	"	"	"	"	"	"	SP

See footnotes at end of table.

Downloaded from http://www.everyspec.com

TABLE 101.I. Relays, EM, ER, dc operated, part numbers and characteristics - Continued.

Rated coil voltage	Part number 1/	Figure number	Shock (see table II)	Vibration (see table III)	System voltage and frequency - contact current in amperes																				Terminal style (see table IV)
					28 V dc				400 Hz								50/60 Hz								
									115 V 1-phase				115/200 V 3-phase				115 V 1 phase				115/200 V 3-phase				
					Resis-tive	Induc-tive	Motor	Lamp	Resis-tive	Induc-tive	Motor	Lamp	Resis-tive	Induc-tive	Motor	Lamp	Resis-tive	Induc-tive	Motor	Lamp	Resis-tive	Induc-tive	Motor	Lamp	
DPDT CONTACTS - 2 FORM C - Continued																									
	M39016/9 2/																								
12.0	-022Z	101-7	2	9	1.0	0.2	---	0.1	0.1	---	---	---	---	---	---	---	0.1	---	---	---	---	---	---	---	.187
"	-046Z	101-7	"	"	"	"	"	"	"	"	"	"	"	"	"	"	"	"	"	"	"	"	"	"	.187
"	-060Z	101-7	"	"	"	"	"	"	"	"	"	"	"	"	"	"	"	"	"	"	"	"	"	"	.500
"	-067Z	101-7	"	"	"	"	"	"	"	"	"	"	"	"	"	"	"	"	"	"	"	"	"	"	.500
	M39016/13 2/																								
	Flange A																								
"	-059Z	101-8	3	"	2.0	0.3	"	"	0.125	"	"	"	"	"	"	"	0.125	"	"	"	"	"	"	"	L
"	-062Z	"	"	"	"	"	"	"	"	"	"	"	"	"	"	"	"	"	"	"	"	"	"	"	WL
"	-107Z	"	"	"	"	"	"	"	"	"	"	"	"	"	"	"	"	"	"	"	"	"	"	"	SP
	Flange B																								
"	-065Z	"	"	"	"	"	"	"	"	"	"	"	"	"	"	"	"	"	"	"	"	"	"	"	L
"	-068Z	"	"	"	"	"	"	"	"	"	"	"	"	"	"	"	"	"	"	"	"	"	"	"	WL
"	-071Z	"	"	"	"	"	"	"	"	"	"	"	"	"	"	"	"	"	"	"	"	"	"	"	SP
	No mount																								
"	-056Z	"	"	"	"	"	"	"	"	"	"	"	"	"	"	"	"	"	"	"	"	"	"	"	SP
"	-076Z	"	"	"	"	"	"	"	"	"	"	"	"	"	"	"	"	"	"	"	"	"	"	"	WL
"	-090Z	"	"	"	"	"	"	"	"	"	"	"	"	"	"	"	"	"	"	"	"	"	"	"	L
	M39016/17 2/																								
"	-028Z	101-9	2	"	1.0	0.2	"	"	0.1	"	"	"	"	"	"	"	0.1	"	"	"	"	"	"	"	.187
"	-034Z	101-9	2	"	"	"	"	"	0.1	"	"	"	"	"	"	"	0.1	"	"	"	"	"	"	"	.500
	M39016/34 2/																								
	Bracket																								
"	-004Z	101-10	3	6	"	"	"	---	---	"	"	"	"	"	"	"	---	"	"	"	"	"	"	"	WL
	No mount																								
"	-005Z	"	"	"	"	"	"	"	"	"	"	"	"	"	"	"	"	"	"	"	"	"	"	"	SP
"	-011Z 4/	"	"	"	"	"	"	"	"	"	"	"	"	"	"	"	"	"	"	"	"	"	"	"	SKP
	Tab mount																								
"	-006Z	"	"	"	"	"	"	"	"	"	"	"	"	"	"	"	"	"	"	"	"	"	"	"	SP
	Flange mount																								
"	-014Z 4/	"	"	"	"	"	"	"	"	"	"	"	"	"	"	"	"	"	"	"	"	"	"	"	SKP

See footnotes at end of table.

Downloaded from http://www.everyspec.com

TABLE 101.I. Relays, EM, ER, dc operated, part numbers and characteristics - Continued.

Rated coil voltage	Part number 1/	Figure number	Shock (see table II)	Vibration (see table III)	System voltage and frequency - contact current in amperes																				Terminal style (see table IV)
					28 V dc				400 Hz								50/60 Hz								
									115 V 1-phase				115/200 V 3-phase				115 V 1 phase				115/200 V 3-phase				
					Resis-tive	Induc-tive	Motor	Lamp	Resis-tive	Induc-tive	Motor	Lamp	Resis-tive	Induc-tive	Motor	Lamp	Resis-tive	Induc-tive	Motor	Lamp	Resis-tive	Induc-tive	Motor	Lamp	
DPDT CONTACTS - 2 FORM C - Continued																									
	M39016/9 2/																								
18.0	-023Z	101-7	2	9	1.0	0.2	---	0.1	0.1	---	---	---	---	---	---	---	0.1	---	---	---	---	---	---	---	.187
"	-047Z	101-7	"	"	"	"	"	"	"	"	"	"	"	"	"	"	"	"	"	"	"	"	"	"	.187
"	-061Z	101-7	"	"	"	"	"	"	"	"	"	"	"	"	"	"	"	"	"	"	"	"	"	"	.500
"	-068Z	101-7	"	"	"	"	"	"	"	"	"	"	"	"	"	"	"	"	"	"	"	"	"	"	.500
	M39016/13 2/ Flange A																								
"	-108Z	101-8	3	"	2.0	0.3	"	0.1	0.125	"	"	"	"	"	"	"	0.125	"	"	"	"	"	"	"	SP
"	-109Z	"	"	"	"	"	"	"	"	"	"	"	"	"	"	"	"	"	"	"	"	"	"	"	L
"	-110Z	"	"	"	"	"	"	"	"	"	"	"	"	"	"	"	"	"	"	"	"	"	"	"	WL
	Flange B																								
"	-111Z	"	"	"	"	"	"	"	"	"	"	"	"	"	"	"	"	"	"	"	"	"	"	"	SP
"	-112Z	"	"	"	"	"	"	"	"	"	"	"	"	"	"	"	"	"	"	"	"	"	"	"	L
"	-113Z	"	"	"	"	"	"	"	"	"	"	"	"	"	"	"	"	"	"	"	"	"	"	"	WL
	No mount																								
"	-114Z	"	"	"	"	"	"	"	"	"	"	"	"	"	"	"	"	"	"	"	"	"	"	"	L
"	-077Z	"	"	"	"	"	"	"	"	"	"	"	"	"	"	"	"	"	"	"	"	"	"	"	SP
"	-081Z	"	"	"	"	"	"	"	"	"	"	"	"	"	"	"	"	"	"	"	"	"	"	"	WL
	M39016/17 2/																								
"	-029Z	101-9	2	"	1.0	0.2	"	"	0.1	"	"	"	"	"	"	"	0.1	"	"	"	"	"	"	"	.187
"	-035Z	101-9	2	"	1.0	0.2	"	"	0.1	"	"	"	"	"	"	"	0.1	"	"	"	"	"	"	"	.500
	M39016/6 2/ Flange B																								
26.5	-104Z	101-6	3	"	2.0	0.75	"	0.16	0.3	"	"	"	"	"	"	"	0.3	"	"	"	"	"	"	"	L
"	-105Z	"	"	"	"	0.75	"	"	"	"	"	"	"	"	"	"	"	"	"	"	"	"	"	"	SP
	Flange C																								
"	-107Z	"	"	"	"	7.5	"	"	"	"	"	"	"	"	"	"	"	"	"	"	"	"	"	"	L
"	-125Z	"	"	"	"	"	"	"	"	"	"	"	"	"	"	"	"	"	"	"	"	"	"	"	SP
	No mount																								
"	-109Z	"	"	"	"	"	"	"	"	"	"	"	"	"	"	"	"	"	"	"	"	"	"	"	SP
"	-129Z	"	"	"	"	"	"	"	"	"	"	"	"	"	"	"	"	"	"	"	"	"	"	"	L

See footnotes at end of table.

Downloaded from http://www.everyspec.com

TABLE 101.I. Relays, EM, ER, dc operated, part numbers and characteristics - Continued.

Rated coil voltage	Part number 1/	Figure number	Shock (see table II)	Vibration (see table III)	System voltage and frequency - contact current in amperes																				Terminal style (see table IV)
					28 V dc				400 Hz								50/60 Hz								
									115 V 1-phase				115/200 V 3-phase				115 V 1 phase				115/200 V 3-phase				
					Resistive	Inductive	Motor	Lamp	Resistive	Inductive	Motor	Lamp	Resistive	Inductive	Motor	Lamp	Resistive	Inductive	Motor	Lamp	Resistive	Inductive	Motor	Lamp	
DPDT CONTACTS - 2 FORM C - Continued																									
	M39016/9 2/																								
26.5	-024Z	101-7	2	9	1.0	0.2	---	0.1	0.1	---	---	---	---	---	---	---	0.1	---	---	---	---	---	---	---	.187
"	-048Z	101-7	"	"	"	"	"	"	"	"	"	"	"	"	"	"	"	"	"	"	"	"	"	"	.187
"	-062Z	101-7	"	"	"	"	"	"	"	"	"	"	"	"	"	"	"	"	"	"	"	"	"	"	.500
"	-069Z	101-7	"	"	"	"	"	"	"	"	"	"	"	"	"	"	"	"	"	"	"	"	"	"	.500
	M39016/13 2/																								
	Flange A																								
"	-115Z	101-8	3	"	2.0	0.3	"	"	0.125	"	"	"	"	"	"	"	0.125	"	"	"	"	"	"	"	SP
"	-060Z	"	"	"	"	"	"	"	"	"	"	"	"	"	"	"	"	"	"	"	"	"	"	"	L
"	-063Z	"	"	"	"	"	"	"	"	"	"	"	"	"	"	"	"	"	"	"	"	"	"	"	WL
	Flange B																								
"	-066Z	"	"	"	"	"	"	"	"	"	"	"	"	"	"	"	"	"	"	"	"	"	"	"	L
"	-069Z	"	"	"	"	"	"	"	"	"	"	"	"	"	"	"	"	"	"	"	"	"	"	"	WL
"	-072Z	"	"	"	"	"	"	"	"	"	"	"	"	"	"	"	"	"	"	"	"	"	"	"	SP
	No mount																								
"	-057Z	"	"	"	"	"	"	"	"	"	"	"	"	"	"	"	"	"	"	"	"	"	"	"	SP
"	-078Z	"	"	"	"	"	"	"	"	"	"	"	"	"	"	"	"	"	"	"	"	"	"	"	WL
"	-091Z	"	"	"	"	"	"	"	"	"	"	"	"	"	"	"	"	"	"	"	"	"	"	"	L
	M39016/17 2/																								
"	-030Z	101-9	2	"	1.0	0.2	"	"	0.1	"	"	"	"	"	"	"	0.1	"	"	"	"	"	"	"	.187
"	-036Z	101-9	"	"	"	"	"	"	0.1	"	"	"	"	"	"	"	0.1	"	"	"	"	"	"	"	.500
	M39016/34 2/																								
	Bracket																								
"	-007Z	101-10	"	6	"	"	"	"	---	"	"	"	"	"	"	"	---	"	"	"	"	"	"	"	WL
	No mount																								
"	-008Z	"	"	"	"	"	"	"	"	"	"	"	"	"	"	"	"	"	"	"	"	"	"	"	SP
"	-012Z 4/	"	"	"	"	"	"	"	"	"	"	"	"	"	"	"	"	"	"	"	"	"	"	"	SKP
	Tab mount																								
"	-009Z	"	"	"	"	"	"	"	"	"	"	"	"	"	"	"	"	"	"	"	"	"	"	"	SP
	Flange mount																								
"	-015Z 4/	"	"	"	"	"	"	"	"	"	"	"	"	"	"	"	"	"	"	"	"	"	"	"	SKP

See footnotes at end of table.

Downloaded from http://www.everyspec.com

TABLE 101.1. Relays, EM, ER, dc operated, part numbers and characteristics - Continued.

Rated coil voltage	Part number 1/	Figure number	Shock (see table II)	Vibration (see table III)	System voltage and frequency - contact current in amperes																				Terminal style (see table IV)
					28 V dc				400 Hz								50/60 Hz								
									115 V 1-phase				115/200 V 3-phase				115 V 1 phase				115/200 V 3-phase				
					Resistive	Inductive	Motor	Lamp	Resistive	Inductive	Motor	Lamp	Resistive	Inductive	Motor	Lamp	Resistive	Inductive	Motor	Lamp	Resistive	Inductive	Motor	Lamp	
OPDT CONTACTS - 2 FORM C - Continued																									
	M6106/27 2/ Conf A																								
28.0	-002Z	101-11	6	4/	5	3	2	1	5	5	3	1	5	5	3	1	---	---	---	---	---	---	---	---	SP
"	-006Z	"	"	"	"	"	"	"	"	"	"	"	"	"	"	"	"	"	"	"	"	"	"	"	L
"	-010Z	"	"	"	"	"	"	"	"	"	"	"	"	"	"	"	"	"	"	"	"	"	"	"	SKP
	Conf B																								
"	-014Z	"	"	"	"	"	"	"	"	"	"	"	"	"	"	"	"	"	"	"	"	"	"	"	SP
"	-018Z	"	"	"	"	"	"	"	"	"	"	"	"	"	"	"	"	"	"	"	"	"	"	"	L
"	-022Z	"	"	"	"	"	"	"	"	"	"	"	"	"	"	"	"	"	"	"	"	"	"	"	SKP
	Conf C																								
"	-026Z	"	"	"	"	"	"	"	"	"	"	"	"	"	"	"	"	"	"	"	"	"	"	"	SP
"	-030Z	"	"	"	"	"	"	"	"	"	"	"	"	"	"	"	"	"	"	"	"	"	"	"	L
"	-034Z	"	"	"	"	"	"	"	"	"	"	"	"	"	"	"	"	"	"	"	"	"	"	"	SKP
"	-038Z	"	"	"	"	"	"	"	"	"	"	"	"	"	"	"	"	"	"	"	"	"	"	"	SP
	MS27401 Conf 1																								
"	-5Z	101-12	"	9	10	8	4	2	10	8	4	2	10	8	4	2	2.5	2.5	2	1	2.5	2.5	2	1	L
"	-6Z	"	"	"	"	"	"	"	"	"	"	"	"	"	"	"	"	"	"	"	"	"	"	"	SKP
"	-42Z	"	"	"	"	"	"	"	"	"	"	"	"	"	"	"	"	"	"	"	"	"	"	"	SP
	Conf 2																								
"	-21Z	"	"	"	"	"	"	"	"	"	"	"	"	"	"	"	"	"	"	"	"	"	"	"	L
"	-38Z	"	"	"	"	"	"	"	"	"	"	"	"	"	"	"	"	"	"	"	"	"	"	"	SP
	Conf 3																								
"	-50Z	"	"	"	"	"	"	"	"	"	"	"	"	"	"	"	"	"	"	"	"	"	"	"	L
"	-51Z	"	"	"	"	"	"	"	"	"	"	"	"	"	"	"	"	"	"	"	"	"	"	"	SP
	Conf 4																								
"	-58Z	"	"	"	"	"	"	"	"	"	"	"	"	"	"	"	"	"	"	"	"	"	"	"	SP

See footnotes at end of table.

Downloaded from http://www.everyspec.com

TABLE 101.I. Relays, EM, ER, dc operated, part numbers and characteristics - Continued.

Rated coil voltage	Part number 1/	Figure number	Shock (see table II)	Vibration (see table III)	System voltage and frequency - contact current in amperes																				Terminal style (see table IV)
					28 V dc				400 Hz								50/60 Hz								
									115 V 1-phase				115/200 V 3-phase				115 V 1 phase				115/200 V 3-phase				
					Resistive	Inductive	Motor	Lamp	Resistive	Inductive	Motor	Lamp	Resistive	Inductive	Motor	Lamp	Resistive	Inductive	Motor	Lamp	Resistive	Inductive	Motor	Lamp	
DPDT CONTACTS - 2 FORM C WITH COIL SUPPRESSION																									
	M6106/27 2/ Conf A																								
28.0	-004Z	101-13	6	4/	5	3	2	1	5	5	3	1	5	5	3	1	---	---	---	---	---	---	---	---	SP
"	-008Z	"	"	"	"	"	"	"	"	"	"	"	"	"	"	"	"	"	"	"	"	"	"	"	L
"	-012Z	"	"	"	"	"	"	"	"	"	"	"	"	"	"	"	"	"	"	"	"	"	"	"	SKP
	Conf B																								
"	-016Z	"	"	"	"	"	"	"	"	"	"	"	"	"	"	"	"	"	"	"	"	"	"	"	SP
"	-020Z	"	"	"	"	"	"	"	"	"	"	"	"	"	"	"	"	"	"	"	"	"	"	"	L
"	-024Z	"	"	"	"	"	"	"	"	"	"	"	"	"	"	"	"	"	"	"	"	"	"	"	SKP
	Conf C																								
"	-028Z	"	"	"	"	"	"	"	"	"	"	"	"	"	"	"	"	"	"	"	"	"	"	"	SP
"	-032Z	"	"	"	"	"	"	"	"	"	"	"	"	"	"	"	"	"	"	"	"	"	"	"	L
"	-036Z	"	"	"	"	"	"	"	"	"	"	"	"	"	"	"	"	"	"	"	"	"	"	"	SKP
"	-042Z	"	"	"	"	"	"	"	"	"	"	"	"	"	"	"	"	"	"	"	"	"	"	"	SP
	MS27401 Conf 1																								
"	-31Z	101-14	"	9	10	8	4	2	10	8	4	2	10	8	4	2	2.5	2.5	2	1	2.5	2.5	2	1	L
"	-33Z	"	"	"	"	"	"	"	"	"	"	"	"	"	"	"	"	"	"	"	"	"	"	"	SKP
"	-44Z	"	"	"	"	"	"	"	"	"	"	"	"	"	"	"	"	"	"	"	"	"	"	"	SP
	Conf 2																								
"	-32Z	"	"	"	"	"	"	"	"	"	"	"	"	"	"	"	"	"	"	"	"	"	"	"	L
"	-40Z	"	"	"	"	"	"	"	"	"	"	"	"	"	"	"	"	"	"	"	"	"	"	"	SP
	Conf 3																								
"	-52Z	"	"	"	"	"	"	"	"	"	"	"	"	"	"	"	"	"	"	"	"	"	"	"	L
"	-53Z	"	"	"	"	"	"	"	"	"	"	"	"	"	"	"	"	"	"	"	"	"	"	"	SP
	Conf 4																								
"	-59Z	"	"	"	"	"	"	"	"	"	"	"	"	"	"	"	"	"	"	"	"	"	"	"	SP

See footnotes at end of table.

Downloaded from http://www.everyspec.com

TABLE 101.1. Relays, EM, ER, dc operated, part numbers and characteristics - Continued.

Rated coil voltage	Part number 1/	Figure number	Shock (see table II)	Vibration (see table III)	System voltage and frequency - contact current in amperes																				Terminal style (see table IV)
					28 V dc				400 Hz								50/60 Hz								
									115 V 1-phase				115/200 V 3-phase				115 V 1 phase				115/200 V 3-phase				
					Resis-tive	Induc-tive	Motor	Lamp	Resis-tive	Induc-tive	Motor	Lamp	Resis-tive	Induc-tive	Motor	Lamp	Resis-tive	Induc-tive	Motor	Lamp	Resis-tive	Induc-tive	Motor	Lamp	
DPDT CONTACTS - 2 FORM C - WITH DIODE COIL TRANSIENT SUPPRESSION																									
	M39016/15 2/																								
5.0	-040Z	101-15	2	9	1.0	0.2	---	0.1	0.1	---	---	---	---	---	---	---	0.1	---	---	---	---	---	---	---	.187
"	-052Z	"	"	"	"	"	"	"	"	"	"	"	"	"	"	"	"	"	"	"	"	"	"	"	.187
"	-082Z	"	"	"	"	"	"	"	"	"	"	"	"	"	"	"	"	"	"	"	"	"	"	"	.500
"	-088Z	"	"	"	"	"	"	"	"	"	"	"	"	"	"	"	"	"	"	"	"	"	"	"	.500
"	-094Z	"	"	"	"	"	"	"	"	"	"	"	"	"	"	"	"	"	"	"	"	"	"	"	.500
"	-100Z	"	"	"	"	"	"	"	"	"	"	"	"	"	"	"	"	"	"	"	"	"	"	"	.500
	M39016/18 2/																								
"	-025Z	101-16	"	"	"	"	"	"	"	"	"	"	"	"	"	"	"	"	"	"	"	"	"	"	.187
"	-031Z	101-16	"	"	"	"	"	"	"	"	"	"	"	"	"	"	"	"	"	"	"	"	"	"	.500
	M39016/37 2/ No mount																								
"	-001Z	101-33	3	"	2.0	0.3	"	"	0.125	"	"	"	"	"	"	"	0.125	"	"	"	"	"	"	"	SP
"	-002Z	101-33	3	"	2.0	0.3	"	"	0.125	"	"	"	"	"	"	"	0.125	"	"	"	"	"	"	"	WL
	M39016/15 2/																								
6.0	-035Z	101-15	2	"	1.0	0.2	"	"	0.1	"	"	"	"	"	"	"	0.1	"	"	"	"	"	"	"	.187
"	-047Z	"	"	"	"	"	"	"	"	"	"	"	"	"	"	"	"	"	"	"	"	"	"	"	.187
"	-077Z	"	"	"	"	"	"	"	"	"	"	"	"	"	"	"	"	"	"	"	"	"	"	"	.500
"	-083Z	"	"	"	"	"	"	"	"	"	"	"	"	"	"	"	"	"	"	"	"	"	"	"	.500
"	-089Z	"	"	"	"	"	"	"	"	"	"	"	"	"	"	"	"	"	"	"	"	"	"	"	.500
"	-095Z	"	"	"	"	"	"	"	"	"	"	"	"	"	"	"	"	"	"	"	"	"	"	"	.500
	M39016/18 2/																								
"	-026Z	101-16	"	"	"	"	"	"	"	"	"	"	"	"	"	"	"	"	"	"	"	"	"	"	.187
"	-032Z	101-16	"	"	"	"	"	"	"	"	"	"	"	"	"	"	"	"	"	"	"	"	"	"	.500
	M39016/37 2/ No mount																								
"	-003Z	101-33	3	"	2.0	0.3	"	"	0.125	"	"	"	"	"	"	"	0.125	"	"	"	"	"	"	"	SP
"	-004Z	101-33	3	"	2.0	0.3	"	"	0.125	"	"	"	"	"	"	"	0.125	"	"	"	"	"	"	"	WL

See footnotes at end of table.

Downloaded from http://www.everyspec.com

TABLE 101.I. Relays, EM, ER, dc operated, part numbers and characteristics - Continued.

Rated coil voltage	Part number 1/	Figure number	Shock (see table II)	Vibration (see table III)	System voltage and frequency - contact current in amperes																				Terminal style (see table IV)
					28 V dc				400 Hz								50/60 Hz								
									115 V 1-phase				115/200 V 3-phase				115 V 1 phase				115/200 V 3-phase				
					Resistive	Inductive	Motor	Lamp	Resistive	Inductive	Motor	Lamp	Resistive	Inductive	Motor	Lamp	Resistive	Inductive	Motor	Lamp	Resistive	Inductive	Motor	Lamp	
DPDT CONTACTS - 2 FORM C - WITH DIODE COIL TRANSIENT SUPPRESSION - Continued																									
	M39016/37 2/																								
	Flange A																								
6.0	-005Z	101-33	3	9	2.0	0.3	---	0.1	0.125	---	---	---	---	---	---	---	0.125	---	---	---	---	---	---	---	L
"	-006Z	"	"	"	"	"	"	"	"	"	"	"	"	"	"	"	"	"	"	"	"	"	"	"	WL
	Flange B																								
"	-007Z	"	"	"	"	"	"	"	"	"	"	"	"	"	"	"	"	"	"	"	"	"	"	"	SP
"	-008Z	"	"	"	"	"	"	"	"	"	"	"	"	"	"	"	"	"	"	"	"	"	"	"	L
"	-009Z	"	"	"	"	"	"	"	"	"	"	"	"	"	"	"	"	"	"	"	"	"	"	"	WL
	M39016/15 2/																								
9.0	-036Z	101-15	2	"	1.0	0.2	"	"	0.1	"	"	"	"	"	"	"	0.1	"	"	"	"	"	"	"	.187
"	-048Z	"	"	"	"	"	"	"	"	"	"	"	"	"	"	"	"	"	"	"	"	"	"	"	.187
"	-078Z	"	"	"	"	"	"	"	"	"	"	"	"	"	"	"	"	"	"	"	"	"	"	"	.500
"	-084Z	"	"	"	"	"	"	"	"	"	"	"	"	"	"	"	"	"	"	"	"	"	"	"	.500
"	-090Z	"	"	"	"	"	"	"	"	"	"	"	"	"	"	"	"	"	"	"	"	"	"	"	.500
"	-096Z	"	"	"	"	"	"	"	"	"	"	"	"	"	"	"	"	"	"	"	"	"	"	"	.500
	M39016/18 2/																								
"	-027Z	101-16	"	"	"	"	"	"	"	"	"	"	"	"	"	"	"	"	"	"	"	"	"	"	.187
"	-033Z	101-16	"	"	"	"	"	"	"	"	"	"	"	"	"	"	"	"	"	"	"	"	"	"	.500
	M39016/37 2/																								
	No mount																								
"	-010Z	101-33	3	"	2.0	0.3	"	"	0.125	"	"	"	"	"	"	"	0.125	"	"	"	"	"	"	"	SP
"	-011Z	101-33	3	"	2.0	0.3	"	"	0.125	"	"	"	"	"	"	"	0.125	"	"	"	"	"	"	"	WL
	M39016/15 2/																								
12.0	-037Z	101-15	2	"	1.0	0.2	"	0.1	0.1	"	"	"	"	"	"	"	0.1	"	"	"	"	"	"	"	.187
"	-049Z	"	"	"	"	"	"	"	"	"	"	"	"	"	"	"	"	"	"	"	"	"	"	"	.187
"	-079Z	"	"	"	"	"	"	"	"	"	"	"	"	"	"	"	"	"	"	"	"	"	"	"	.500
"	-085Z	"	"	"	"	"	"	"	"	"	"	"	"	"	"	"	"	"	"	"	"	"	"	"	.500
"	-091Z	"	"	"	"	"	"	"	"	"	"	"	"	"	"	"	"	"	"	"	"	"	"	"	.500
"	-097Z	"	"	"	"	"	"	"	"	"	"	"	"	"	"	"	"	"	"	"	"	"	"	"	.500

See footnotes at end of table.

Downloaded from http://www.everyspec.com

TABLE 101.I. Relays, EM, ER, dc operated, part numbers and characteristics - Continued.

Rated coil voltage	Part number 1/	Figure number	Shock (see table II)	Vibration (see table III)	System voltage and frequency - contact current in amperes																				Terminal style (see table IV)
					28 V dc				400 Hz								50/60 Hz								
									115 V 1-phase				115/200 V 3-phase				115 V 1 phase				115/200 V 3-phase				
					Resistive	Inductive	Motor	Lamp	Resistive	Inductive	Motor	Lamp	Resistive	Inductive	Motor	Lamp	Resistive	Inductive	Motor	Lamp	Resistive	Inductive	Motor	Lamp	
DPDT CONTACTS - 2 FORM C - WITH DIODE COIL TRANSIENT SUPPRESSION - Continued																									
	M39016/18 2/																								
12.0	-028Z	101-16	2	9	1.0	0.2	---	0.1	0.1	---	---	---	---	---	---	---	0.1	---	---	---	---	---	---	---	.187
"	-034Z	101-16	2	"	1.0	0.2	"	"	0.1	"	"	"	"	"	"	"	0.1	"	"	"	"	"	"	"	.500
	M39016/37 2/																								
	No mount																								
"	-012Z	101-33	3	"	2.0	0.3	"	"	0.125	"	"	"	"	"	"	"	0.125	"	"	"	"	"	"	"	SP
"	-013Z	"	"	"	"	"	"	"	"	"	"	"	"	"	"	"	"	"	"	"	"	"	"	"	WL
	Flange A																								
"	-014Z	"	"	"	"	"	"	"	"	"	"	"	"	"	"	"	"	"	"	"	"	"	"	"	L
"	-015Z	"	"	"	"	"	"	"	"	"	"	"	"	"	"	"	"	"	"	"	"	"	"	"	WL
	Flange B																								
"	-016Z	"	"	"	"	"	"	"	"	"	"	"	"	"	"	"	"	"	"	"	"	"	"	"	SP
"	-017Z	"	"	"	"	"	"	"	"	"	"	"	"	"	"	"	"	"	"	"	"	"	"	"	L
"	-018Z	"	"	"	"	"	"	"	"	"	"	"	"	"	"	"	"	"	"	"	"	"	"	"	WL
	M39016/15 2/																								
18.0	-038Z	101-15	2	"	1.0	0.2	"	"	0.1	"	"	"	"	"	"	"	0.1	"	"	"	"	"	"	"	.187
"	-050Z	"	"	"	"	"	"	"	"	"	"	"	"	"	"	"	"	"	"	"	"	"	"	"	.187
"	-080Z	"	"	"	"	"	"	"	"	"	"	"	"	"	"	"	"	"	"	"	"	"	"	"	.500
"	-086Z	"	"	"	"	"	"	"	"	"	"	"	"	"	"	"	"	"	"	"	"	"	"	"	.500
"	-092Z	"	"	"	"	"	"	"	"	"	"	"	"	"	"	"	"	"	"	"	"	"	"	"	.500
"	-098Z	"	"	"	"	"	"	"	"	"	"	"	"	"	"	"	"	"	"	"	"	"	"	"	.500
	M39016/18 2/																								
"	-029Z	101-16	"	"	"	"	"	"	"	"	"	"	"	"	"	"	"	"	"	"	"	"	"	"	.187
"	-035Z	101-16	"	"	"	"	"	"	"	"	"	"	"	"	"	"	"	"	"	"	"	"	"	"	.500
	M39016/37 2/																								
"	-019Z	101-33	3	"	2.0	0.3	"	"	0.125	"	"	"	"	"	"	"	0.125	"	"	"	"	"	"	"	SP
"	-020Z	101-33	3	"	2.0	0.3	"	"	0.125	"	"	"	"	"	"	"	0.125	"	"	"	"	"	"	"	WL

See footnotes at end of table.

Downloaded from http://www.everyspec.com

TABLE 101.I. Relays, EM, ER, dc operated, part numbers and characteristics - Continued.

Rated coil voltage	Part number 1/	Figure number	Shock (see table II)	Vibration (see table III)	System voltage and frequency - contact current in amperes																				Terminal style (see table IV)
					28 V dc				400 Hz								50/60 Hz								
									115 V 1-phase				115/200 V 3-phase				115 V 1 phase				115/200 V 3-phase				
					Resistive	Inductive	Motor	Lamp	Resistive	Inductive	Motor	Lamp	Resistive	Inductive	Motor	Lamp	Resistive	Inductive	Motor	Lamp	Resistive	Inductive	Motor	Lamp	
DPDT CONTACTS - 2 FORM C - WITH DIODE COIL TRANSIENT SUPPRESSION - Continued																									
	M39016/16 2/																								
26.5	-039Z	101-15	2	9	1.0	0.2	---	0.1	0.1	---	---	---	---	---	---	---	0.1	---	---	---	---	---	---	---	.187
"	-051Z	"	"	"	"	"	"	"	"	"	"	"	"	"	"	"	"	"	"	"	"	"	"	"	.187
"	-081Z	"	"	"	"	"	"	"	"	"	"	"	"	"	"	"	"	"	"	"	"	"	"	"	.500
"	-087Z	"	"	"	"	"	"	"	"	"	"	"	"	"	"	"	"	"	"	"	"	"	"	"	.500
"	-093Z	"	"	"	"	"	"	"	"	"	"	"	"	"	"	"	"	"	"	"	"	"	"	"	.500
"	-099Z	"	"	"	"	"	"	"	"	"	"	"	"	"	"	"	"	"	"	"	"	"	"	"	.500
	M39016/18 2/																								
"	-030Z	101-16	"	"	"	"	"	"	"	"	"	"	"	"	"	"	"	"	"	"	"	"	"	"	.187
"	-036Z	101-16	"	"	"	"	"	"	"	"	"	"	"	"	"	"	"	"	"	"	"	"	"	"	.500
	M39016/37 2/ No mount																								
"	-021Z	101-33	3	"	2.0	0.3	"	"	0.125	"	"	"	"	"	"	"	0.125	"	"	"	"	"	"	"	SP
"	-022Z	"	"	"	"	"	"	"	"	"	"	"	"	"	"	"	"	"	"	"	"	"	"	"	WL
	Flange A																								
"	-023Z	"	"	"	"	"	"	"	"	"	"	"	"	"	"	"	"	"	"	"	"	"	"	"	L
"	-024Z	"	"	"	"	"	"	"	"	"	"	"	"	"	"	"	"	"	"	"	"	"	"	"	WL
	Flange B																								
"	-025Z	"	"	"	"	"	"	"	"	"	"	"	"	"	"	"	"	"	"	"	"	"	"	"	SP
"	-026Z	"	"	"	"	"	"	"	"	"	"	"	"	"	"	"	"	"	"	"	"	"	"	"	L
"	-027Z	"	"	"	"	"	"	"	"	"	"	"	"	"	"	"	"	"	"	"	"	"	"	"	WL
DPDT CONTACTS - 2 FORM C - WITH COIL TRANSIENT SUPPRESSION																									
	M39016/22 2/ Flange B																								
6.0	-018Z	101-17	3	9	2.0	0.50	---	---	0.100	---	---	---	---	---	---	---	0.100	---	---	---	---	---	---	---	L
"	-019Z	"	"	"	"	"	"	"	"	"	"	"	"	"	"	"	"	"	"	"	"	"	"	"	SP
	Flange C																								
"	-021Z	"	"	"	"	"	"	"	"	"	"	"	"	"	"	"	"	"	"	"	"	"	"	"	L
	No mount																								
"	-023Z	"	"	"	"	"	"	"	"	"	"	"	"	"	"	"	"	"	"	"	"	"	"	"	SP

See footnotes at end of table.

Downloaded from http://www.everyspec.com

TABLE 101.I. Relays, EM, ER, dc operated, part numbers and characteristics - Continued.

Rated coil voltage	Part number 1/	Figure number	Shock (see table II)	Vibration (see table III)	System voltage and frequency - contact current in amperes																				Terminal style (see table IV)
					28 V dc				400 Hz								50/60 Hz								
									115 V 1-phase				115/200 V 3-phase				115 V 1 phase				115/200 V 3-phase				
					Resistive	Inductive	Motor	Lamp	Resistive	Inductive	Motor	Lamp	Resistive	Inductive	Motor	Lamp	Resistive	Inductive	Motor	Lamp	Resistive	Inductive	Motor	Lamp	
DPDT CONTACTS - 2 FORM C - WITH COIL TRANSIENT SUPPRESSION - Continued																									
	M39016/22 2/																								
	Flange B																								
12.0	-011Z	101-17	3	9	2.0	0.50	---	---	0.100	---	---	---	---	---	---	---	0.100	---	---	---	---	---	---	---	L
"	-012Z	"	"	"	"	"	"	"	"	"	"	"	"	"	"	"	"	"	"	"	"	"	"	"	SP
	Flange C																								
"	-014Z	"	"	"	"	"	"	"	"	"	"	"	"	"	"	"	"	"	"	"	"	"	"	"	L
	No mount																								
"	-016Z	"	"	"	"	"	"	"	"	"	"	"	"	"	"	"	"	"	"	"	"	"	"	"	SP
	Flange B																								
26.5	-004Z	"	"	"	"	"	"	"	"	"	"	"	"	"	"	"	"	"	"	"	"	"	"	"	L
"	-005Z	"	"	"	"	"	"	"	"	"	"	"	"	"	"	"	"	"	"	"	"	"	"	"	SP
	Flange C																								
"	-007Z	"	"	"	"	"	"	"	"	"	"	"	"	"	"	"	"	"	"	"	"	"	"	"	L
	No mount																								
"	-009Z	"	"	"	"	"	"	"	"	"	"	"	"	"	"	"	"	"	"	"	"	"	"	"	SP
DPDT CONTACTS - 2 FORM C WITH DIODE COIL TRANSIENT SUPPRESSION AND POLARITY REVERSAL PROTECTION																									
	M39016/19 2/																								
5.0	-025Z	101-18	2	9	1.0	0.2	0.1	---	0.100	---	---	---	---	---	---	---	0.100	---	---	---	---	---	---	---	.187
"	-031Z	101-18	"	"	"	"	"	"	"	"	"	"	"	"	"	"	"	"	"	"	"	"	"	"	.500
	M39016/20 2/																								
"	-037Z	101-19	"	"	"	"	"	"	"	"	"	"	"	"	"	"	"	"	"	"	"	"	"	"	.187
"	-043Z	"	"	"	"	"	"	"	"	"	"	"	"	"	"	"	"	"	"	"	"	"	"	"	.187
"	-049Z	"	"	"	"	"	"	"	"	"	"	"	"	"	"	"	"	"	"	"	"	"	"	"	.500
"	-055Z	"	"	"	"	"	"	"	"	"	"	"	"	"	"	"	"	"	"	"	"	"	"	"	.500
	M39016/38 2/																								
"	-001Z	101-34	3	"	2.0	0.3	"	"	0.125	"	"	"	"	"	"	"	0.125	"	"	"	"	"	"	"	SP
"	-002Z	101-34	3	"	2.0	0.3	"	"	0.125	"	"	"	"	"	"	"	"	"	"	"	"	"	"	"	WL

See footnotes at end of table.

Downloaded from http://www.everyspec.com

TABLE 101.I. Relays, EM, ER, dc operated, part numbers and characteristics - Continued.

Rated coil voltage	Part number 1/	Figure number	Shock (see table II)	Vibration (see table III)	System voltage and frequency - contact current in amperes																				Terminal style (see table IV)
					28 V dc				400 Hz[1]								50/60 Hz								
									115 V 1-phase				115/200 V 3-phase				115 V 1 phase				115/200 V 3-phase				
					Resistive	Inductive	Motor	Lamp	Resistive	Inductive	Motor	Lamp	Resistive	Inductive	Motor	Lamp	Resistive	Inductive	Motor	Lamp	Resistive	Inductive	Motor	Lamp	
DPDT CONTACTS - 2 FORM C WITH DIODE COIL TRANSIENT SUPPRESSION AND POLARITY REVERSAL PROTECTION - Continued																									
	M39016/19 2/																								
6.0	-026Z	101-18	2	9	1.0	0.2	---	0.1	0.100	---	---	---	---	---	---	---	0.100	---	---	---	---	---	---	---	.187
"	-032Z	101-18	"	"	"	"	"	"	"	"	"	"	"	"	"	"	"	"	"	"	"	"	"	"	.500
	M39016/20 2/																								
"	-038Z	101-19	"	"	"	"	"	"	"	"	"	"	"	"	"	"	"	"	"	"	"	"	"	"	.187
"	-044Z	"	"	"	"	"	"	"	"	"	"	"	"	"	"	"	"	"	"	"	"	"	"	"	.187
"	-050Z	"	"	"	"	"	"	"	"	"	"	"	"	"	"	"	"	"	"	"	"	"	"	"	.500
"	-056Z	"	"	"	"	"	"	"	"	"	"	"	"	"	"	"	"	"	"	"	"	"	"	"	.500
	M39016/38 2/ No mount																								
"	-003Z	101-34	3	"	2.0	0.3	"	"	0.125	"	"	"	"	"	"	"	0.125	"	"	"	"	"	"	"	SP
"	-004Z	"	"	"	"	"	"	"	"	"	"	"	"	"	"	"	"	"	"	"	"	"	"	"	WL
	Flange A																								
"	-005Z	"	"	"	"	"	"	"	"	"	"	"	"	"	"	"	"	"	"	"	"	"	"	"	L
"	-006Z	"	"	"	"	"	"	"	"	"	"	"	"	"	"	"	"	"	"	"	"	"	"	"	WL
	Flange B																								
"	-007Z	"	"	"	"	"	"	"	"	"	"	"	"	"	"	"	"	"	"	"	"	"	"	"	SP
"	-008Z	"	"	"	"	"	"	"	"	"	"	"	"	"	"	"	"	"	"	"	"	"	"	"	L
"	-009Z	"	"	"	"	"	"	"	"	"	"	"	"	"	"	"	"	"	"	"	"	"	"	"	WL
	M39016/19 2/																								
9.0	-027Z	101-18	2	"	1.0	0.2	"	"	0.100	"	"	"	"	"	"	"	0.100	"	"	"	"	"	"	"	.187
"	-033Z	101-18	"	"	"	"	"	"	"	"	"	"	"	"	"	"	"	"	"	"	"	"	"	"	.500
	M39016/20 2/																								
"	-039Z	101-19	"	"	"	"	"	"	"	"	"	"	"	"	"	"	"	"	"	"	"	"	"	"	.187
"	-045Z	"	"	"	"	"	"	"	"	"	"	"	"	"	"	"	"	"	"	"	"	"	"	"	.187
"	-051Z	"	"	"	"	"	"	"	"	"	"	"	"	"	"	"	"	"	"	"	"	"	"	"	.500
"	-057Z	"	"	"	"	"	"	"	"	"	"	"	"	"	"	"	"	"	"	"	"	"	"	"	.500
	M39016/38 2/ No mount																								
"	-010Z	101-34	3	"	2.0	0.3	"	"	0.125	"	"	"	"	"	"	"	0.125	"	"	"	"	"	"	"	SP
"	-011Z	101-34	3	"	2.0	0.3	"	"	0.125	"	"	"	"	"	"	"	0.125	"	"	"	"	"	"	"	WL

See footnotes at end of table.

Downloaded from http://www.everyspec.com

TABLE 101.I. Relays, EM, ER, dc operated, part numbers and characteristics - Continued.

Rated coil voltage	Part number 1/	Figure number	Shock (see table II)	Vibration (see table III)	System voltage and frequency - contact current in amperes																				Terminal style (see table IV)
					28 V dc				400 Hz								50/60 Hz								
									115 V 1-phase				115/200 V 3-phase				115 V 1 phase				115/200 V 3-phase				
					Resistive	Inductive	Motor	Lamp	Resistive	Inductive	Motor	Lamp	Resistive	Inductive	Motor	Lamp	Resistive	Inductive	Motor	Lamp	Resistive	Inductive	Motor	Lamp	
DPDT CONTACTS - 2 FORM C WITH DIODE COIL TRANSIENT SUPPRESSION AND POLARITY REVERSAL PROTECTION - Continued																									
	M39016/19 2/																								
12.0	-028Z	101-18	2	9	1.0	0.2	---	0.1	0.100	---	---	---	---	---	---	---	0.100	---	---	---	---	---	---	---	.187
"	-034Z	101-18	"	"	"	"	"	"	"	"	"	"	"	"	"	"	"	"	"	"	"	"	"	"	.500
	M39016/20 2/																								
"	-040Z	101-19	"	"	"	"	"	"	"	"	"	"	"	"	"	"	"	"	"	"	"	"	"	"	.187
"	-046Z	"	"	"	"	"	"	"	"	"	"	"	"	"	"	"	"	"	"	"	"	"	"	"	.187
"	-052Z	"	"	"	"	"	"	"	"	"	"	"	"	"	"	"	"	"	"	"	"	"	"	"	.500
"	-058Z	"	"	"	"	"	"	"	"	"	"	"	"	"	"	"	"	"	"	"	"	"	"	"	.500
	M39016/38 2/ No mount																								
"	-012Z	101-34	3	"	2.0	0.3	---	"	0.125	"	"	"	"	"	"	"	0.125	"	"	"	"	"	"	"	SP
"	-013Z	"	"	"	"	"	"	"	"	"	"	"	"	"	"	"	"	"	"	"	"	"	"	"	WL
	Flange A																								
"	-014Z	"	"	"	"	"	"	"	"	"	"	"	"	"	"	"	"	"	"	"	"	"	"	"	L
"	-015Z	"	"	"	"	"	"	"	"	"	"	"	"	"	"	"	"	"	"	"	"	"	"	"	WL
	Flange B																								
"	-016Z	"	"	"	"	"	"	"	"	"	"	"	"	"	"	"	"	"	"	"	"	"	"	"	SP
"	-017Z	"	"	"	"	"	"	"	"	"	"	"	"	"	"	"	"	"	"	"	"	"	"	"	L
"	-018Z	"	"	"	"	"	"	"	"	"	"	"	"	"	"	"	"	"	"	"	"	"	"	"	WL
	M39016/19 2/																								
18.0	-029Z	101-18	2	"	1.0	0.2	"	"	0.100	"	"	"	"	"	"	"	0.100	"	"	"	"	"	"	"	.187
"	-035Z	101-18	"	"	"	"	"	"	"	"	"	"	"	"	"	"	"	"	"	"	"	"	"	"	.500
	M39016/20 2/																								
"	-041Z	101-19	"	"	"	"	"	"	"	"	"	"	"	"	"	"	"	"	"	"	"	"	"	"	.187
"	-047Z	"	"	"	"	"	"	"	"	"	"	"	"	"	"	"	"	"	"	"	"	"	"	"	.187
"	-053Z	"	"	"	"	"	"	"	"	"	"	"	"	"	"	"	"	"	"	"	"	"	"	"	.500
"	-059Z	"	"	"	"	"	"	"	"	"	"	"	"	"	"	"	"	"	"	"	"	"	"	"	.500
	M39016/38 2/ No mount																								
"	-019Z	101-34	3	"	2.0	0.3	"	"	0.125	"	"	"	"	"	"	"	0.125	"	"	"	"	"	"	"	SP
"	-020Z	101-34	3	"	2.0	0.3	"	"	0.125	"	"	"	"	"	"	"	0.125	"	"	"	"	"	"	"	WL

See footnotes at end of table.

Downloaded from http://www.everyspec.com

TABLE 101.I. Relays, EM, ER, dc operated, part numbers and characteristics - Continued.

Rated coil voltage	Part number 1/	Figure number	Shock (see table II)	Vibration (see table III)	System voltage and frequency - contact current in amperes																				Terminal style (see table IV)
					28 V dc				400 Hz								50/60 Hz								
									115 V 1-phase				115/200 V 3-phase				115 V 1 phase				115/200 V 3-phase				
					Resistive	Inductive	Motor	Lamp	Resistive	Inductive	Motor	Lamp	Resistive	Inductive	Motor	Lamp	Resistive	Inductive	Motor	Lamp	Resistive	Inductive	Motor	Lamp	
DPDT CONTACTS - 2 FORM C WITH DIODE COIL TRANSIENT SUPPRESSION AND POLARITY REVERSAL PROTECTION - Continued																									
	M39016/19 2/																								
26.5	-030Z	101-18	2	9	1.0	0.2	---	0.1	0.100	---	---	---	---	---	---	---	0.1	---	---	---	---	---	---	---	.187
"	-036Z	101-18	"	"	"	"	"	"	"	"	"	"	"	"	"	"	"	"	"	"	"	"	"	"	.500
	M39016/20 2/																								
"	-042Z	101-19	"	"	"	"	"	"	"	"	"	"	"	"	"	"	"	"	"	"	"	"	"	"	.187
"	-048Z	"	"	"	"	"	"	"	"	"	"	"	"	"	"	"	"	"	"	"	"	"	"	"	.187
"	-054Z	"	"	"	"	"	"	"	"	"	"	"	"	"	"	"	"	"	"	"	"	"	"	"	.500
"	-060Z	"	"	"	"	"	"	"	"	"	"	"	"	"	"	"	"	"	"	"	"	"	"	"	.500
	M39016/38 2/																								
	No mount																								
"	-021Z	101-34	3	"	2.0	0.3	---	"	0.125	"	"	"	"	"	"	"	0.125	"	"	"	"	"	"	"	SP
"	-022Z	"	"	"	"	"	"	"	"	"	"	"	"	"	"	"	"	"	"	"	"	"	"	"	WL
	Flange A																								
"	-023Z	"	"	"	"	"	"	"	"	"	"	"	"	"	"	"	"	"	"	"	"	"	"	"	L
"	-024Z	"	"	"	"	"	"	"	"	"	"	"	"	"	"	"	"	"	"	"	"	"	"	"	WL
	Flange B																								
"	-025Z	"	"	"	"	"	"	"	"	"	"	"	"	"	"	"	"	"	"	"	"	"	"	"	SP
"	-026Z	"	"	"	"	"	"	"	"	"	"	"	"	"	"	"	"	"	"	"	"	"	"	"	L
"	-027Z	"	"	"	"	"	"	"	"	"	"	"	"	"	"	"	"	"	"	"	"	"	"	"	WL
3PDT CONTACTS - 3 FORM C																									
	M6106/29 2/																								
	Conf A																								
28.0	-002Z	101-20	6	4/	10	6	4	2	10	8	4	2	10	8	4	2	---	---	---	---	---	---	---	---	SP
"	-006Z	"	"	"	"	"	"	"	"	"	"	"	"	"	"	"	"	"	"	"	"	"	"	"	L
"	-010Z	"	"	"	"	"	"	"	"	"	"	"	"	"	"	"	"	"	"	"	"	"	"	"	SKP
	Conf B																								
"	-014Z	"	"	"	"	"	"	"	"	"	"	"	"	"	"	"	"	"	"	"	"	"	"	"	SP
"	-018Z	"	"	"	"	"	"	"	"	"	"	"	"	"	"	"	"	"	"	"	"	"	"	"	L
"	-022Z	"	"	"	"	"	"	"	"	"	"	"	"	"	"	"	"	"	"	"	"	"	"	"	SKP
	Conf C																								
"	-026Z	"	3	"	"	"	"	"	"	"	"	"	"	"	"	"	"	"	"	"	"	"	"	"	SP
"	-030Z	"	"	"	"	"	"	"	"	"	"	"	"	"	"	"	"	"	"	"	"	"	"	"	L
"	-034Z	"	"	"	"	"	"	"	"	"	"	"	"	"	"	"	"	"	"	"	"	"	"	"	SKP

See footnotes at end of table.

Downloaded from http://www.everyspec.com

TABLE 101.I. Relays, EM, ER, dc operated, part numbers and characteristics - Continued.

Rated coil voltage	Part number 1/	Figure number	Shock (see table II)	Vibration (see table III)	System voltage and frequency - contact current in amperes: 28 V dc Resistive	28 V dc Inductive	28 V dc Motor	28 V dc Lamp	400 Hz 115 V 1-phase Resistive	400 Hz 115 V 1-phase Inductive	400 Hz 115 V 1-phase Motor	400 Hz 115 V 1-phase Lamp	400 Hz 115/200 V 3-phase Resistive	400 Hz 115/200 V 3-phase Inductive	400 Hz 115/200 V 3-phase Motor	400 Hz 115/200 V 3-phase Lamp	50/60 Hz 115 V 1 phase Resistive	50/60 Hz 115 V 1 phase Inductive	50/60 Hz 115 V 1 phase Motor	50/60 Hz 115 V 1 phase Lamp	50/60 Hz 115/200 V 3-phase Resistive	50/60 Hz 115/200 V 3-phase Inductive	50/60 Hz 115/200 V 3-phase Motor	50/60 Hz 115/200 V 3-phase Lamp	Terminal style (see table IV)
3PDT CONTACTS - 3 FORM C																									
	MS27743 Conf 1																								
28.0	-10 3/	101-21	6	9	25	12	10	5	25	15	10	5	25	15	10	5	---	---	---	---	---	---	---	---	L
"	-12 3/	"	"	"	"	"	"	"	"	"	"	"	"	"	"	"	"	"	"	"	"	"	"	"	SKP
"	-30 3/	"	"	"	"	"	"	"	"	"	"	"	"	"	"	"	"	"	"	"	"	"	"	"	SP
	Conf 3																								
"	-11 3/	"	"	"	"	"	"	"	"	"	"	"	"	"	"	"	"	"	"	"	"	"	"	"	L
"	-31 3/	"	"	"	"	"	"	"	"	"	"	"	"	"	"	"	"	"	"	"	"	"	"	"	SP
3PDT CONTACTS - 3 FORM C - WITH COIL SUPPRESSION																									
	M6106/29 2/ Conf A																								
28.0	-004Z	101-22	6	4/	10	6	4	2	10	8	4	2	10	8	4	2	---	"	"	"	"	"	"	"	SP
"	-008Z	"	"	"	"	"	"	"	"	"	"	"	"	"	"	"	"	"	"	"	"	"	"	"	L
"	-012Z	"	"	"	"	"	"	"	"	"	"	"	"	"	"	"	"	"	"	"	"	"	"	"	SKP
	Conf B																								
"	-016Z	"	"	"	"	"	"	"	"	"	"	"	"	"	"	"	"	"	"	"	"	"	"	"	SP
"	-020Z	"	"	"	"	"	"	"	"	"	"	"	"	"	"	"	"	"	"	"	"	"	"	"	L
"	-024Z	"	"	"	"	"	"	"	"	"	"	"	"	"	"	"	"	"	"	"	"	"	"	"	SKP
	Conf C																								
"	-028Z	"	"	"	"	"	"	"	"	"	"	"	"	"	"	"	"	"	"	"	"	"	"	"	SP
"	-032Z	"	"	"	"	"	"	"	"	"	"	"	"	"	"	"	"	"	"	"	"	"	"	"	L
"	-036Z	"	"	"	"	"	"	"	"	"	"	"	"	"	"	"	"	"	"	"	"	"	"	"	SKP
	MS27743 Conf 1																								
"	-22 3/	101-23	6	9	25	12	10	5	25	15	10	5	25	15	10	5	"	"	"	"	"	"	"	"	L
"	-34 3/	"	"	"	"	"	"	"	"	"	"	"	"	"	"	"	"	"	"	"	"	"	"	"	SP
	Conf 3																								
"	-23 3/	"	"	"	"	"	"	"	"	"	"	"	"	"	"	"	"	"	"	"	"	"	"	"	L
"	-35 3/	"	"	"	"	"	"	"	"	"	"	"	"	"	"	"	"	"	"	"	"	"	"	"	SP

See footnotes at end of table.

Downloaded from http://www.everyspec.com

TABLE 101.I. Relays, EM, ER, dc operated, part numbers and characteristics - Continued.

Rated coil voltage	Part number 1/	Figure number	Shock (see table II)	Vibration (see table III)	System voltage and frequency - contact current in amperes: 28 V dc Resistive	28 V dc Inductive	28 V dc Motor	28 V dc Lamp	400 Hz 115 V 1-phase Resistive	400 Hz 115 V 1-phase Inductive	400 Hz 115 V 1-phase Motor	400 Hz 115 V 1-phase Lamp	400 Hz 115/200 V 3-phase Resistive	400 Hz 115/200 V 3-phase Inductive	400 Hz 115/200 V 3-phase Motor	400 Hz 115/200 V 3-phase Lamp	50/60 Hz 115 V 1 phase Resistive	50/60 Hz 115 V 1 phase Inductive	50/60 Hz 115 V 1 phase Motor	50/60 Hz 115 V 1 phase Lamp	50/60 Hz 115/200 V 3-phase Resistive	50/60 Hz 115/200 V 3-phase Inductive	50/60 Hz 115/200 V 3-phase Motor	50/60 Hz 115/200 V 3-phase Lamp	Terminal style (see table IV)
4PDT CONTACTS - 4 FORM C																									
	M39016/14 2/ Flange																								
6.0	-004Z	101-24	3	9	1.0	0.3	---	0.1	0.125	---	---	---	---	---	---	---	0.125	---	---	---	---	---	---	---	L
	No mount																								
"	-005Z	101-24	3	9	1.0	0.3	"	0.1	0.125	"	"	"	"	"	"	"	0.125	"	"	"	"	"	"	"	SP
	M39016/39 2/ End bracket																								
"	-013Z	101-25	2	7	2.0	---	"	---	0.25	"	"	"	"	"	"	"	0.25	"	"	"	"	"	"	"	L
"	-014Z	"	"	"	"	"	"	"	"	"	"	"	"	"	"	"	"	"	"	"	"	"	"	"	SP
	No mount																								
"	-015Z	"	"	"	"	"	"	"	"	"	"	"	"	"	"	"	"	"	"	"	"	"	"	"	L
"	-016Z	"	"	"	"	"	"	"	"	"	"	"	"	"	"	"	"	"	"	"	"	"	"	"	SP
	Side bracket																								
"	-017Z	"	1	"	"	"	"	"	"	"	"	"	"	"	"	"	"	"	"	"	"	"	"	"	L
"	-018Z	"	1	"	"	"	"	"	"	"	"	"	"	"	"	"	"	"	"	"	"	"	"	"	SP
	M39016/40 2/ Flange A																								
"	-005Z	101-26	3	"	"	0.75	"	"	0.3	"	"	"	"	"	"	"	0.3	"	"	"	"	"	"	"	L
"	-011Z	"	"	"	"	"	"	"	"	"	"	"	"	"	"	"	"	"	"	"	"	"	"	"	SP
"	-017Z	"	"	"	"	"	"	"	"	"	"	"	"	"	"	"	"	"	"	"	"	"	"	"	WL
"	-023Z	"	"	"	"	"	"	"	"	"	"	"	"	"	"	"	"	"	"	"	"	"	"	"	SKP
	Flange B																								
"	-006Z	"	"	"	"	"	"	"	"	"	"	"	"	"	"	"	"	"	"	"	"	"	"	"	L
"	-018Z	"	"	"	"	"	"	"	"	"	"	"	"	"	"	"	"	"	"	"	"	"	"	"	WL
"	-027Z	"	"	"	"	"	"	"	"	"	"	"	"	"	"	"	"	"	"	"	"	"	"	"	SP
	No mount																								
"	-012Z	"	"	"	"	"	"	"	"	"	"	"	"	"	"	"	"	"	"	"	"	"	"	"	SP
"	-024Z	"	"	"	"	"	"	"	"	"	"	"	"	"	"	"	"	"	"	"	"	"	"	"	SKP
"	-030Z	"	"	"	"	"	"	"	"	"	"	"	"	"	"	"	"	"	"	"	"	"	"	"	WL
	M39016/14 2/ Flange																								
12.0	-006Z	101-24	"	"	1.0	0.3	"	0.1	0.125	"	"	"	"	"	"	"	0.125	"	"	"	"	"	"	"	L
	No mount																								
12.0	-007Z	101-24	"	"	1.0	0.3	"	0.1	0.125	"	"	"	"	"	"	"	0.125	"	"	"	"	"	"	"	SP

See footnotes at end of table.

Downloaded from http://www.everyspec.com

TABLE 101.I. Relays, EM, ER, dc operated, part numbers and characteristics - Continued.

Rated coil voltage	Part number 1/	Figure number	Shock (see table II)	Vibration (see table III)	System voltage and frequency - contact current in amperes																				Terminal style (see table IV)
					28 V dc				400 Hz								50/60 Hz								
									115 V 1-phase				115/200 V 3-phase				115 V 1 phase				115/200 V 3-phase				
					Resistive	Inductive	Motor	Lamp	Resistive	Inductive	Motor	Lamp	Resistive	Inductive	Motor	Lamp	Resistive	Inductive	Motor	Lamp	Resistive	Inductive	Motor	Lamp	
4PDT CONTACTS - 4 FORM C - Continued																									
	M39016/39 2/ End bracket																								
12.0	-007Z	101-25	2	7	2.0	---	---	---	0.25	---	---	---	---	---	---	---	0.25	---	---	---	---	---	---	---	L
"	-008Z	"	"	"	"	"	"	"	"	"	"	"	"	"	"	"	"	"	"	"	"	"	"	"	SP
	No mount																								
"	-009Z	"	"	"	"	"	"	"	"	"	"	"	"	"	"	"	"	"	"	"	"	"	"	"	L
"	-010Z	"	"	"	"	"	"	"	"	"	"	"	"	"	"	"	"	"	"	"	"	"	"	"	SP
	Side mount																								
"	-011Z	"	1	"	"	"	"	"	"	"	"	"	"	"	"	"	"	"	"	"	"	"	"	"	L
"	-012Z	"	1	"	"	"	"	"	"	"	"	"	"	"	"	"	"	"	"	"	"	"	"	"	SP
	M39016/40 2/ Flange A																								
"	-003Z	101-26	3	"	"	0.75	"	"	0.3	"	"	"	"	"	"	"	0.3	"	"	"	"	"	"	"	L
"	-009Z	"	"	"	"	"	"	"	"	"	"	"	"	"	"	"	"	"	"	"	"	"	"	"	SP
"	-015Z	"	"	"	"	"	"	"	"	"	"	"	"	"	"	"	"	"	"	"	"	"	"	"	WL
"	-021Z	"	"	"	"	"	"	"	"	"	"	"	"	"	"	"	"	"	"	"	"	"	"	"	SKP
	Flange B																								
"	-004Z	"	"	"	"	"	"	"	"	"	"	"	"	"	"	"	"	"	"	"	"	"	"	"	L
"	-016Z	"	"	"	"	"	"	"	"	"	"	"	"	"	"	"	"	"	"	"	"	"	"	"	WL
"	-026Z	"	"	"	"	"	"	"	"	"	"	"	"	"	"	"	"	"	"	"	"	"	"	"	SP
	No mount																								
"	-010Z	"	"	"	"	"	"	"	"	"	"	"	"	"	"	"	"	"	"	"	"	"	"	"	SP
"	-022Z	"	"	"	"	"	"	"	"	"	"	"	"	"	"	"	"	"	"	"	"	"	"	"	SKP
"	-029Z	"	"	"	"	"	"	"	"	"	"	"	"	"	"	"	"	"	"	"	"	"	"	"	WL
	M39016/14 2/ No mount																								
22.0	-003Z	101-24	"	9	1.0	0.3	"	0.1	0.125	"	"	"	"	"	"	"	0.125	"	"	"	"	"	"	"	SP
	M39016/14 2/ Flange																								
26.5	-001Z	101-24	"	"	"	"	"	"	"	"	"	"	"	"	"	"	"	"	"	"	"	"	"	"	L
	No mount																								
26.5	-002Z	101-24	"	"	"	"	"	"	"	"	"	"	"	"	"	"	"	"	"	"	"	"	"	"	SP

See footnotes at end of table.

Downloaded from http://www.everyspec.com

TABLE 101.I. Relays, EM, ER, dc operated, part numbers and characteristics - Continued.

Rated coil voltage	Part number 1/	Figure number	Shock (see table II)	Vibration (see table III)	System voltage and frequency - contact current in amperes																				Terminal style (see table IV)
					28 V dc				400 Hz								50/60 Hz								
									115 V 1-phase				115/200 V 3-phase				115 V 1 phase				115/200 V 3-phase				
					Resis-tive	Induc-tive	Motor	Lamp	Resis-tive	Induc-tive	Motor	Lamp	Resis-tive	Induc-tive	Motor	Lamp	Resis-tive	Induc-tive	Motor	Lamp	Resis-tive	Induc-tive	Motor	Lamp	
4PDT CONTACTS - 4 FORM C - Coontinued																									
	M39016/39 2/																								
	End bracket																								
26.5	-001Z	101-25	2	7	2.0	0.5	---	---	0.25	.75	---	---	---	---	---	---	0.25	.75	---	---	---	---	---	---	L
"	-002Z	"	"	"	"	"	"	"	"	"	"	"	"	"	"	"	"	"	"	"	"	"	"	"	SP
	No mount																								
"	-003Z	"	"	"	"	"	"	"	"	"	"	"	"	"	"	"	"	"	"	"	"	"	"	"	L
"	-004Z	"	"	"	"	"	"	"	"	"	"	"	"	"	"	"	"	"	"	"	"	"	"	"	SP
	Side bracket																								
"	-005Z	"	1	"	"	"	"	"	"	"	"	"	"	"	"	"	"	"	"	"	"	"	"	"	L
"	-006Z	"	1	"	"	"	"	"	"	"	"	"	"	"	"	"	"	"	"	"	"	"	"	"	SP
	M39016/40 2/																								
	Flange A																								
"	-001Z	101-26	3	"	"	0.75	"	"	0.3	---	"	"	"	"	"	"	0.3	---	"	"	"	"	"	"	L
"	-007Z	"	"	"	"	"	"	"	"	"	"	"	"	"	"	"	"	"	"	"	"	"	"	"	SP
"	-013Z	"	"	"	"	"	"	"	"	"	"	"	"	"	"	"	"	"	"	"	"	"	"	"	WL
"	-019Z	"	"	"	"	"	"	"	"	"	"	"	"	"	"	"	"	"	"	"	"	"	"	"	SKP
	Flange B																								
"	-002Z	"	"	"	"	"	"	"	"	"	"	"	"	"	"	"	"	"	"	"	"	"	"	"	L
"	-014Z	"	"	"	"	"	"	"	"	"	"	"	"	"	"	"	"	"	"	"	"	"	"	"	WL
"	-025Z	"	"	"	"	"	"	"	"	"	"	"	"	"	"	"	"	"	"	"	"	"	"	"	SP
	No mount																								
"	-008Z	"	"	"	"	"	"	"	"	"	"	"	"	"	"	"	"	"	"	"	"	"	"	"	SP
"	-020Z	"	"	"	"	"	"	"	"	"	"	"	"	"	"	"	"	"	"	"	"	"	"	"	SKP
"	-028Z	"	"	"	"	"	"	"	"	"	"	"	"	"	"	"	"	"	"	"	"	"	"	"	WL
	M6106/28 2/																								
	Conf A																								
28.0	-002Z	101-27	6	4/	5	3	2	1	5	5	3	1	5	5	3	1	---	"	"	"	"	"	"	"	SP
"	-006Z	"	"	"	"	"	"	"	"	"	"	"	"	"	"	"	"	"	"	"	"	"	"	"	L
"	-010Z	"	"	"	"	"	"	"	"	"	"	"	"	"	"	"	"	"	"	"	"	"	"	"	SKP
	Conf B																								
"	-014Z	"	"	"	"	"	"	"	"	"	"	"	"	"	"	"	"	"	"	"	"	"	"	"	SP
"	-018Z	"	"	"	"	"	"	"	"	"	"	"	"	"	"	"	"	"	"	"	"	"	"	"	L
"	-022Z	"	"	"	"	"	"	"	"	"	"	"	"	"	"	"	"	"	"	"	"	"	"	"	SKP
	Conf C																								
"	-026Z	"	"	"	"	"	"	"	"	"	"	"	"	"	"	"	"	"	"	"	"	"	"	"	SP
"	-030Z	"	"	"	"	"	"	"	"	"	"	"	"	"	"	"	"	"	"	"	"	"	"	"	L
"	-034Z	"	"	"	"	"	"	"	"	"	"	"	"	"	"	"	"	"	"	"	"	"	"	"	SKP

See footnotes at end of table.

Downloaded from http://www.everyspec.com

TABLE 101.I. Relays, EM, ER, dc operated, part numbers and characteristics - Continued.

Rated coil voltage	Part number 1/	Figure number	Shock (see table II)	Vibration (see table III)	System voltage and frequency - contact current in amperes																				Terminal style (see table IV)
					28 V dc				400 Hz								50/60 Hz								
									115 V 1-phase				115/200 V 3-phase				115 V 1 phase				115/200 V 3-phase				
					Resistive	Inductive	Motor	Lamp	Resistive	Inductive	Motor	Lamp	Resistive	Inductive	Motor	Lamp	Resistive	Inductive	Motor	Lamp	Resistive	Inductive	Motor	Lamp	
4PDT CONTACTS - 4 FORM C - Continued																									
	MS27400 Conf 1																								
28.0	-5Z	101-28	6	9	10	8	4	2	10	8	4	2	10	8	4	2	2.5	2.5	2	1	2.5	2.5	2	1	L
"	-6Z	"	"	"	"	"	"	"	"	"	"	"	"	"	"	"	"	"	"	"	"	"	"	"	SKP
"	-36Z	"	"	"	"	"	"	"	"	"	"	"	"	"	"	"	"	"	"	"	"	"	"	"	SP
	Conf 2																								
"	-19Z	"	"	"	"	"	"	"	"	"	"	"	"	"	"	"	"	"	"	"	"	"	"	"	L
	Conf 3																								
"	-44Z	"	"	"	"	"	"	"	"	"	"	"	"	"	"	"	"	"	"	"	"	"	"	"	L
"	-45Z	"	"	"	"	"	"	"	"	"	"	"	"	"	"	"	"	"	"	"	"	"	"	"	SP
4PDT CONTACTS - 4 FORM C - WITH COIL SUPPRESSION																									
	M6106/28 2/ Conf A																								
28.0	-004Z	101-29	6	4/	5	3	2	1	5	5	3	1	5	5	3	1	---	---	---	---	---	---	---	---	SP
"	-008Z	"	"	"	"	"	"	"	"	"	"	"	"	"	"	"	"	"	"	"	"	"	"	"	L
"	-012Z	"	"	"	"	"	"	"	"	"	"	"	"	"	"	"	"	"	"	"	"	"	"	"	SKP
	Conf B																								
"	-016Z	"	"	"	"	"	"	"	"	"	"	"	"	"	"	"	"	"	"	"	"	"	"	"	SP
"	-020Z	"	"	"	"	"	"	"	"	"	"	"	"	"	"	"	"	"	"	"	"	"	"	"	L
"	-024Z	"	"	"	"	"	"	"	"	"	"	"	"	"	"	"	"	"	"	"	"	"	"	"	SKP
	Conf C																								
"	-028Z	"	"	"	"	"	"	"	"	"	"	"	"	"	"	"	"	"	"	"	"	"	"	"	SP
"	-032Z	"	"	"	"	"	"	"	"	"	"	"	"	"	"	"	"	"	"	"	"	"	"	"	L
"	-036Z	"	"	"	"	"	"	"	"	"	"	"	"	"	"	"	"	"	"	"	"	"	"	"	SKP
	MS27400 Conf 1																								
"	-029Z	101-30	"	9	10	8	4	2	10	8	4	2	10	8	4	2	2.5	2.5	2	1	2.5	2.5	2	1	L
"	-031Z	"	"	"	"	"	"	"	"	"	"	"	"	"	"	"	"	"	"	"	"	"	"	"	SKP
"	-038Z	"	"	"	"	"	"	"	"	"	"	"	"	"	"	"	"	"	"	"	"	"	"	"	SP
	Conf 2																								
"	-030Z	"	"	"	"	"	"	"	"	"	"	"	"	"	"	"	"	"	"	"	"	"	"	"	L
	Conf 3																								
"	-046Z	"	"	"	"	"	"	"	"	"	"	"	"	"	"	"	"	"	"	"	"	"	"	"	L
"	-047Z	"	"	"	"	"	"	"	"	"	"	"	"	"	"	"	"	"	"	"	"	"	"	"	SP

See footnotes at end of table.

Downloaded from http://www.everyspec.com

TABLE 101.I. Relays, EM, ER, dc operated, part numbers and characteristics - Continued.

Rated coil voltage	Part number 1/	Figure number	Shock (see table II)	Vibration (see table III)	System voltage and frequency - contact current in amperes																				Terminal style (see table IV)
					28 V dc				400 Hz								50/60 Hz								
									115 V 1-phase				115/200 V 3-phase				115 V 1 phase				115/200 V 3-phase				
					Resis-tive	Induc-tive	Motor	Lamp	Resis-tive	Induc-tive	Motor	Lamp	Resis-tive	Induc-tive	Motor	Lamp	Resis-tive	Induc-tive	Motor	Lamp	Resis-tive	Induc-tive	Motor	Lamp	
6PDT CONTACTS - 6 FORM C																									
	M6106/8																								
28.0	-005 3/	101-31	1	6	10	8	4	2	10	8	4	2	10	8	4	2	---	---	---	---	---	---	---	---	L
28.0	-006 3/	101-31	1	6	10	8	4	2	10	8	4	2	10	8	4	2	---	---	---	---	---	---	---	---	SKP
6PDT CONTACTS - 6 FORM C - WITH COIL SUPPRESSION																									
	M6106/8																								
28.0	-011 3/	101-32	1	6	10	8	4	2	10	8	4	2	10	8	4	2	---	---	---	---	---	---	---	---	L
28.0	-012 3/	101-32	1	6	10	8	4	2	10	8	4	2	10	8	4	2	---	---	---	---	---	---	---	---	SKP

1/ The symbol "Z" is used to indicate that a failure rate symbol is required. See table V and the latest qualified parts list (QPL) of the specification being used.

2/ Relay possesses high level and low level capabilities. The low level rating is 10-50 microamperes at 10-50 millivolts dc or peak ac.

3/ These relays are tested to the group A ER requirements only and additional life testing is not required. For group A inspection, operational reliability shall be performed at the alternate low level run in.

4/ Socket plug-in relays are not to be used in Air Force airborne applications.

5/ See specification sheet.

Downloaded from http://www.everyspec.com

Downloaded from http://www.everyspec.com

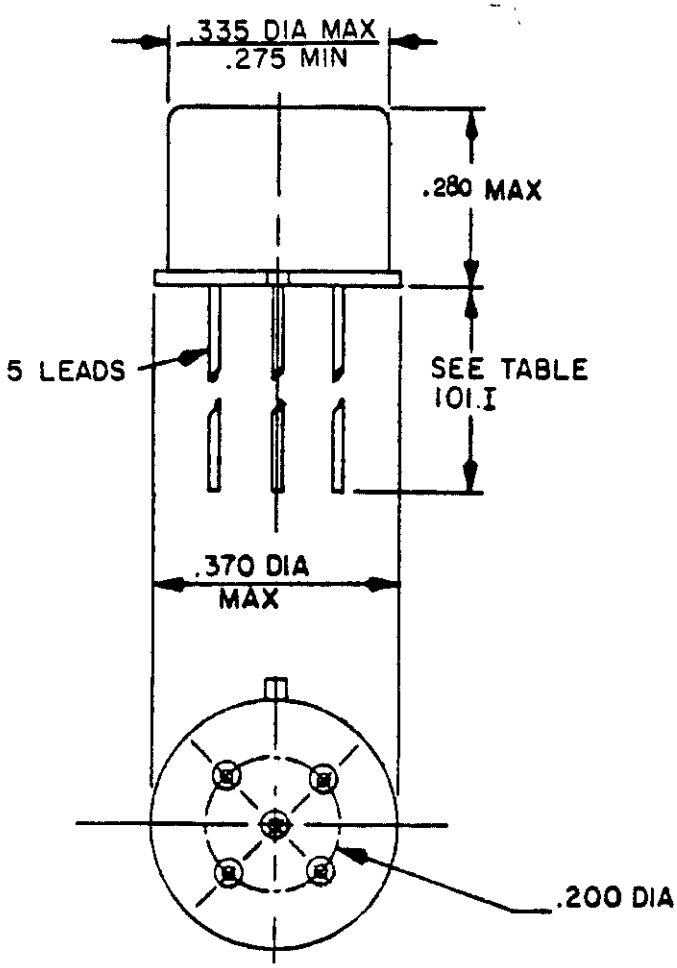

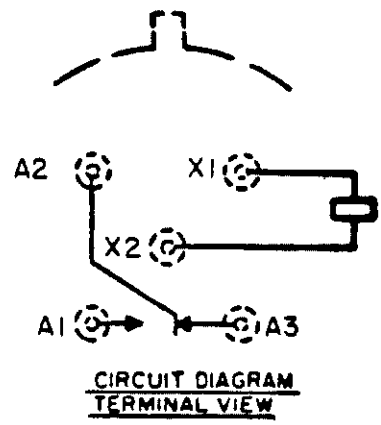

INCHES	MM
.200	5.08
.275	6.99
.280	7.11
.335	8.51
.370	9.40

FIGURE 101-1. Relay, EM, ER, SPDT, low level to 1 ampere (MIL-R-39016/7).

Downloaded from http://www.everyspec.com

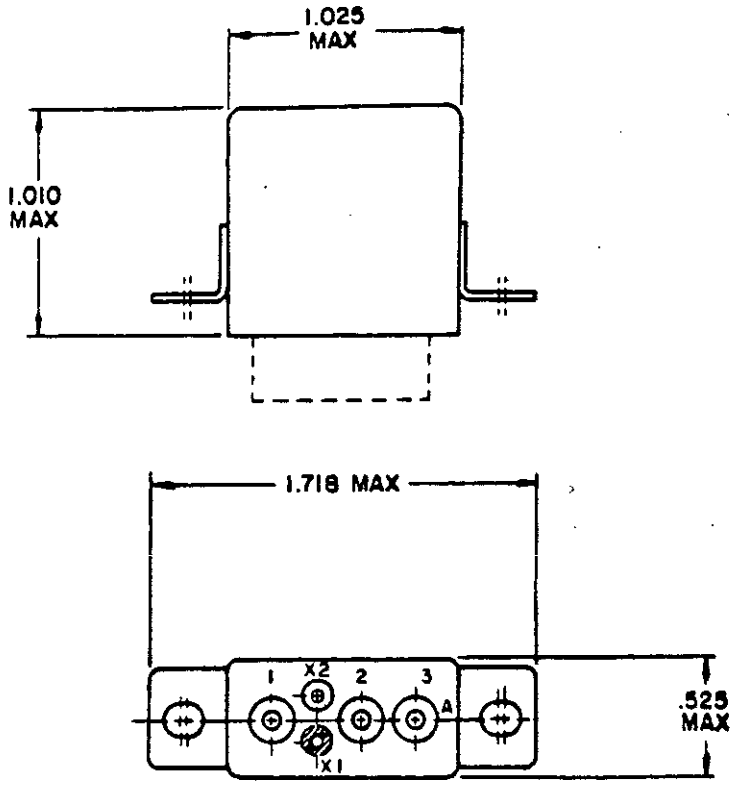

CONFIGURATION A

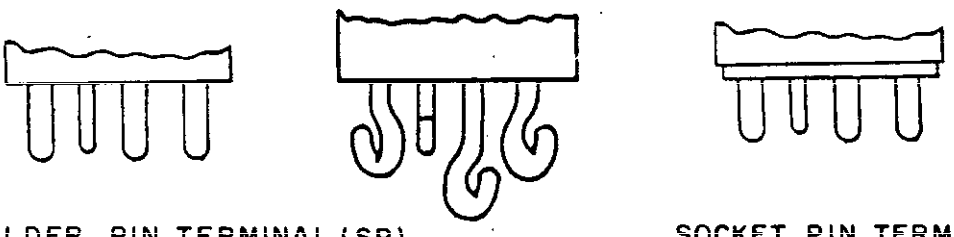

SOLDER PIN TERMINAL (SP)

SOCKET PIN TERMINAL (SKP)

SOLDER HOOK TERMINAL (L)

FIGURE 101-2. Relay, EM, ER, SPDT, 25 amperes (MIL-R-6106/19).

Downloaded from http://www.everyspec.com

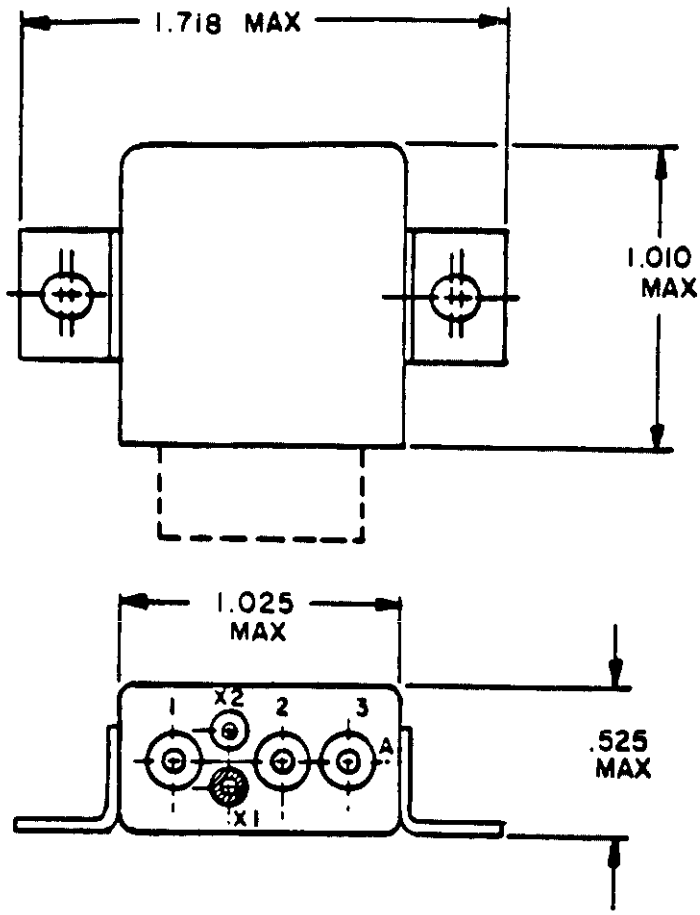

CONFIGURATION B

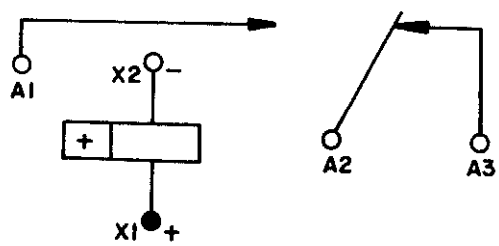

INCHES	MM
.525	13.34
1.010	25.65
1.025	26.04
1.718	43.64

CIRCUIT DIAGRAM

FIGURE 101-2. Relay, EM, ER, SPDT, 25 amperes (MIL-R-6106/19) - Continued.

Downloaded from http://www.everyspec.com

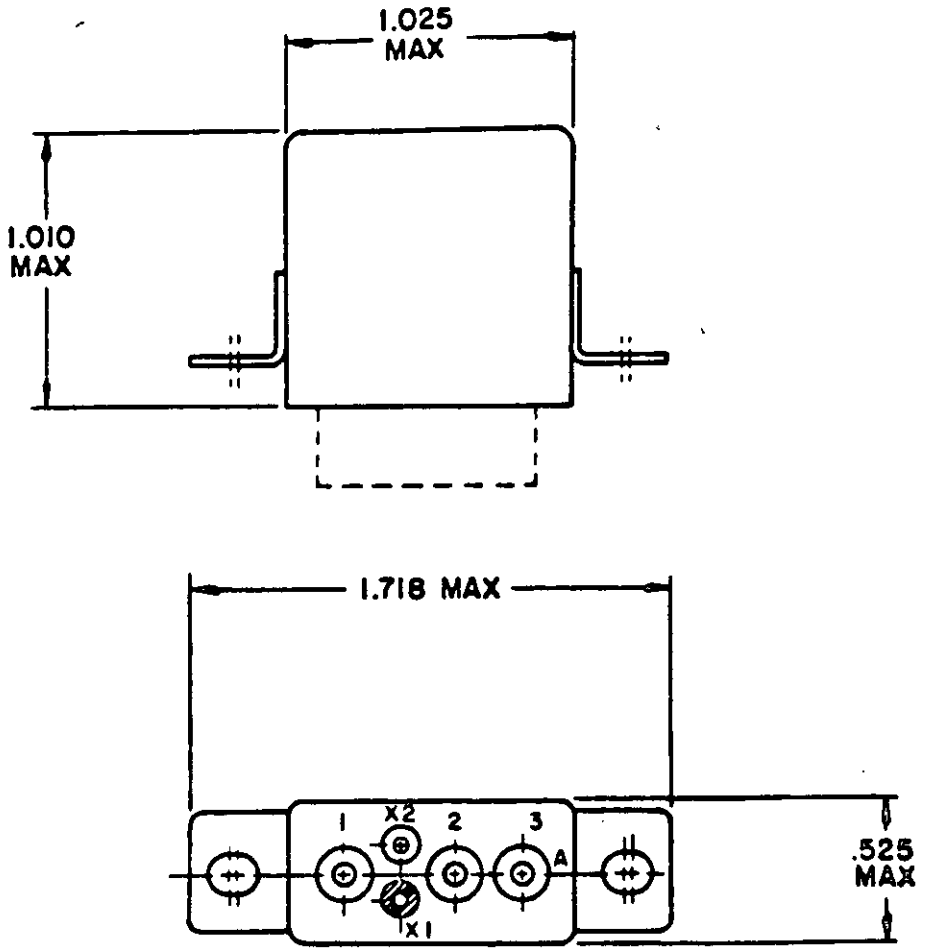

CONFIGURATION A

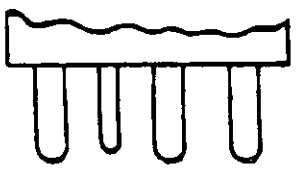

SOLDER PIN TERMINAL (SP)

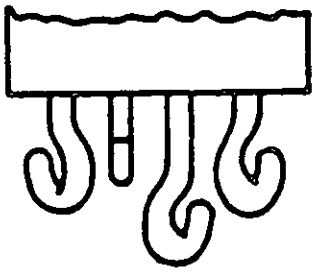

SOLDER HOOK (L)

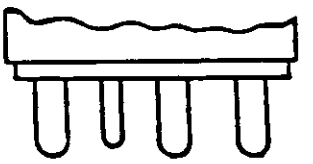

SOCKET PIN TERMINAL (SKP)

FIGURE 101-3. Relay, EM, ER, SPDT, 25 amperes with coil suppression (MIL-R-6106/19).

Downloaded from http://www.everyspec.com

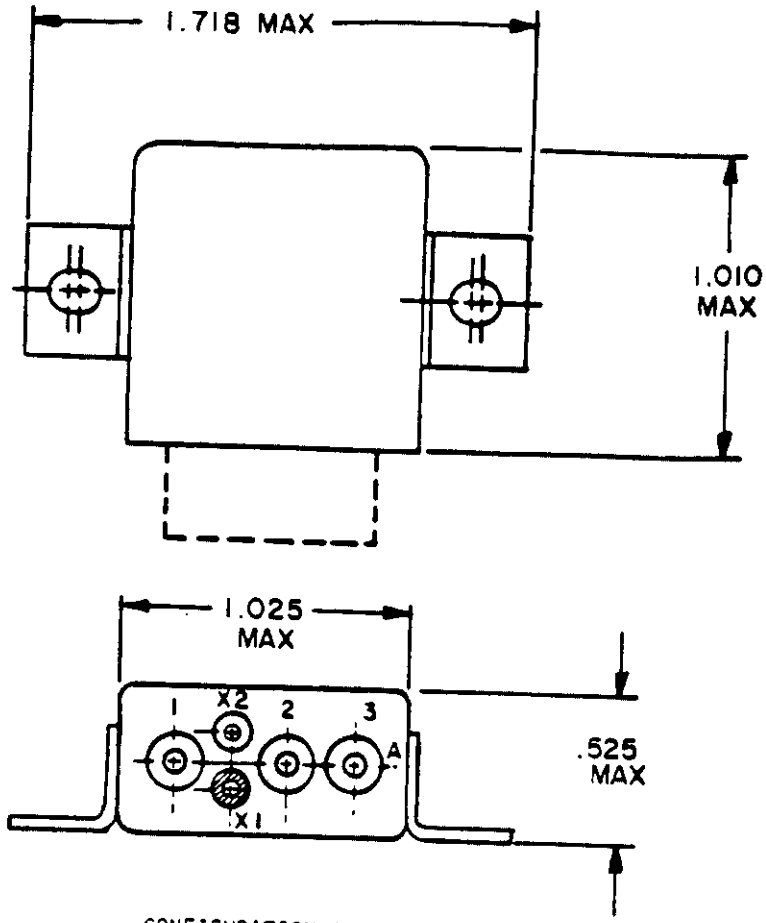

CONFIGURATION B

INCHES	MM
.525	13.34
1.010	25.65
1.025	26.04
1.718	43.64

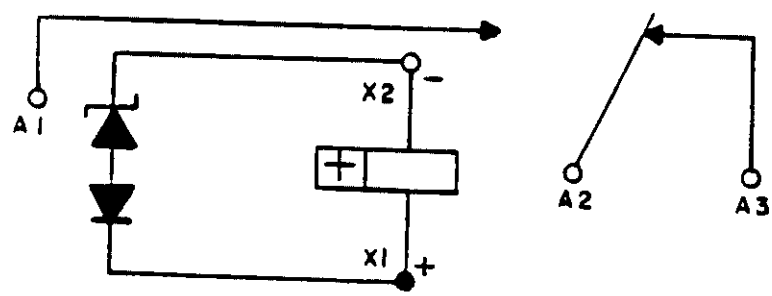

CIRCUIT DIAGRAM

FIGURE 101-3. Relay, EM, ER, SPDT, 25 amperes with coil suppression (MIL-R-6106/19) - Continued.

Downloaded from http://www.everyspec.com

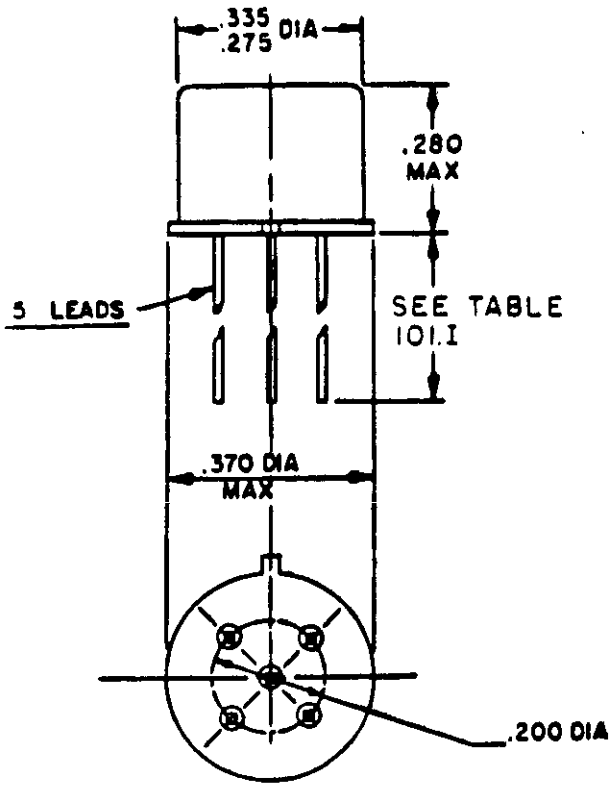

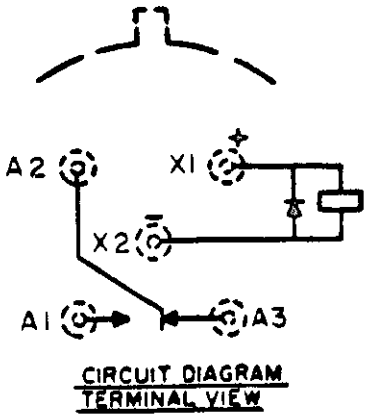

INCHES	MM
.200	5.08
.275	6.99
.280	7.11
.335	8.51
.370	9.40

FIGURE 101-4. Relay, EM, ER, SPDT, low level to 1 ampere, with internal diode for coil transient suppression (MIL-R-39016/23).

Downloaded from http://www.everyspec.com

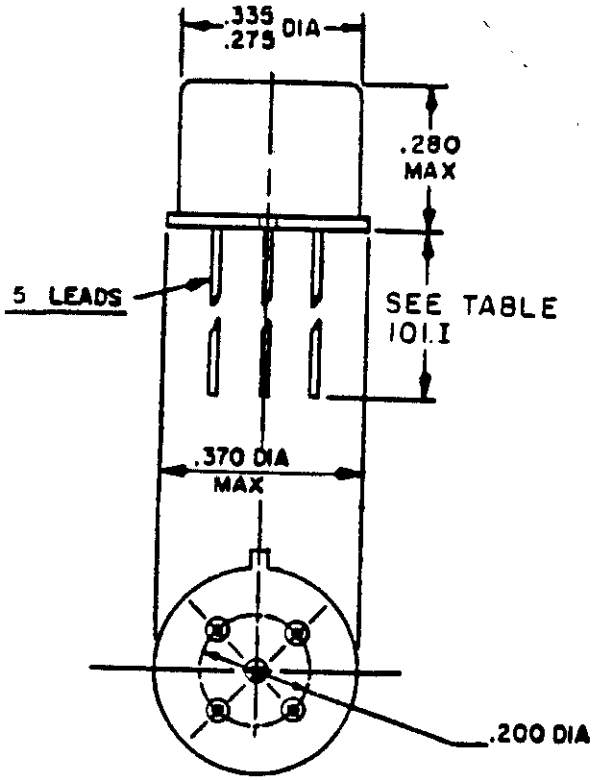

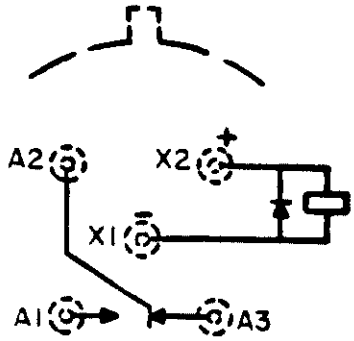

CIRCUIT DIAGRAM
TERMINAL VIEW

INCHES	MM
.200	5.08
.275	6.99
.280	7.11
.335	8.51
.370	9.40

FIGURE 101-5. Relay, EM, ER, SPDT, low level to 1 ampere, with internal diodes for coil transient suppression and polarity reversal protection (MIL-R-39016/24).

Downloaded from http://www.everyspec.com

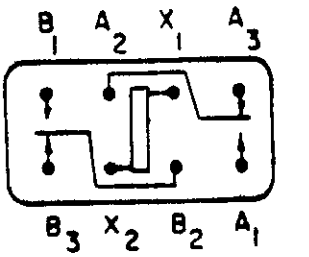

CIRCUIT DIAGRAM

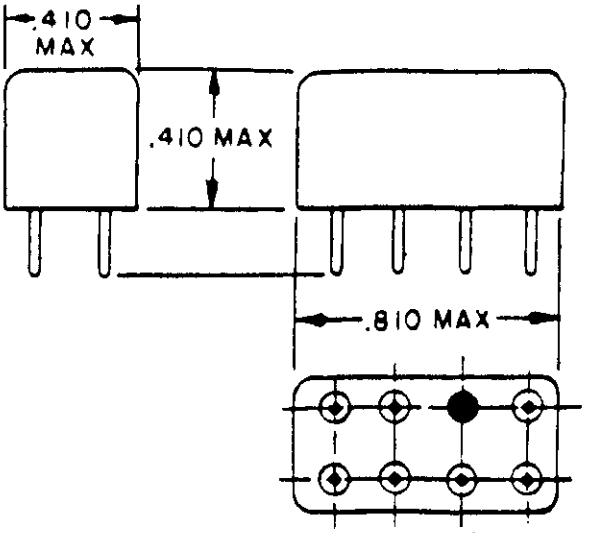

NO MOUNT

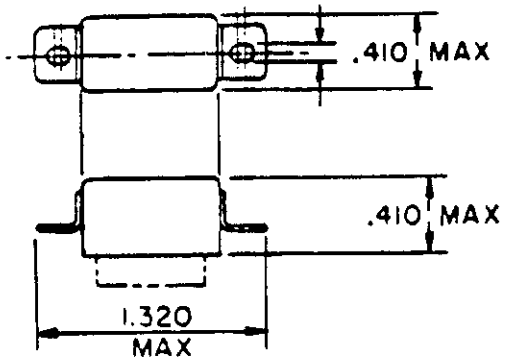

FLANGE MOUNT "B"

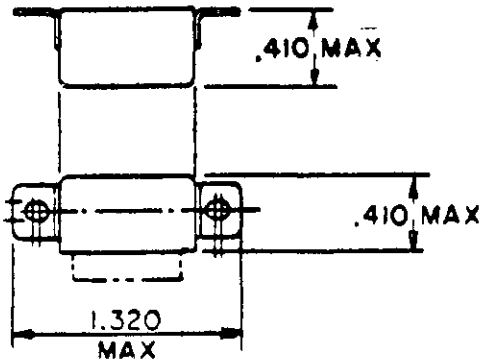

FLANGE MOUNT "C"

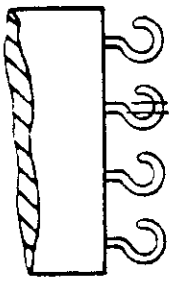

SOLDER LUG

INCHES	MM
.410	10.41
.810	20.57
1.320	33.53

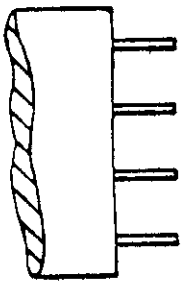

PIN
(PRINTED CIRCUIT)

FIGURE 101-6. Relay, EM, ER, DPDT, low level to 2 amperes (MIL-R-39016/6).

Downloaded from http://www.everyspec.com

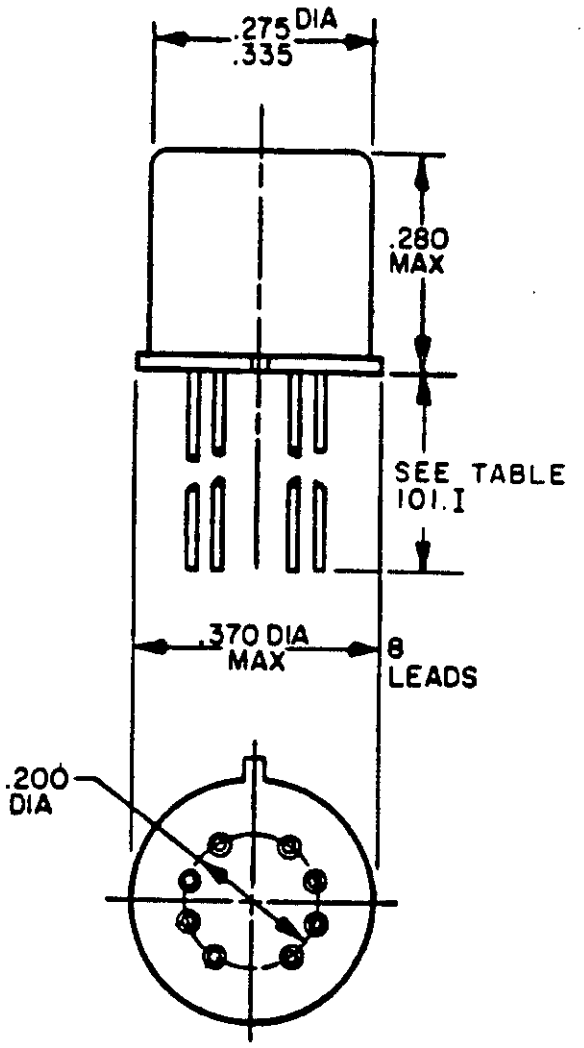

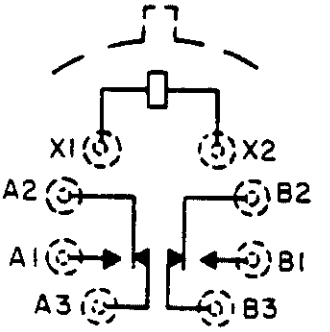

CIRCUIT DIAGRAM
TERMINAL VIEW

INCHES	MM
.200	5.08
.275	6.99
.280	7.11
.335	8.51
.370	9.40

FIGURE 101-7. Relay, EM, ER, DPDT, low level to 1 ampere (MIL-R-39016/9).

Downloaded from http://www.everyspec.com

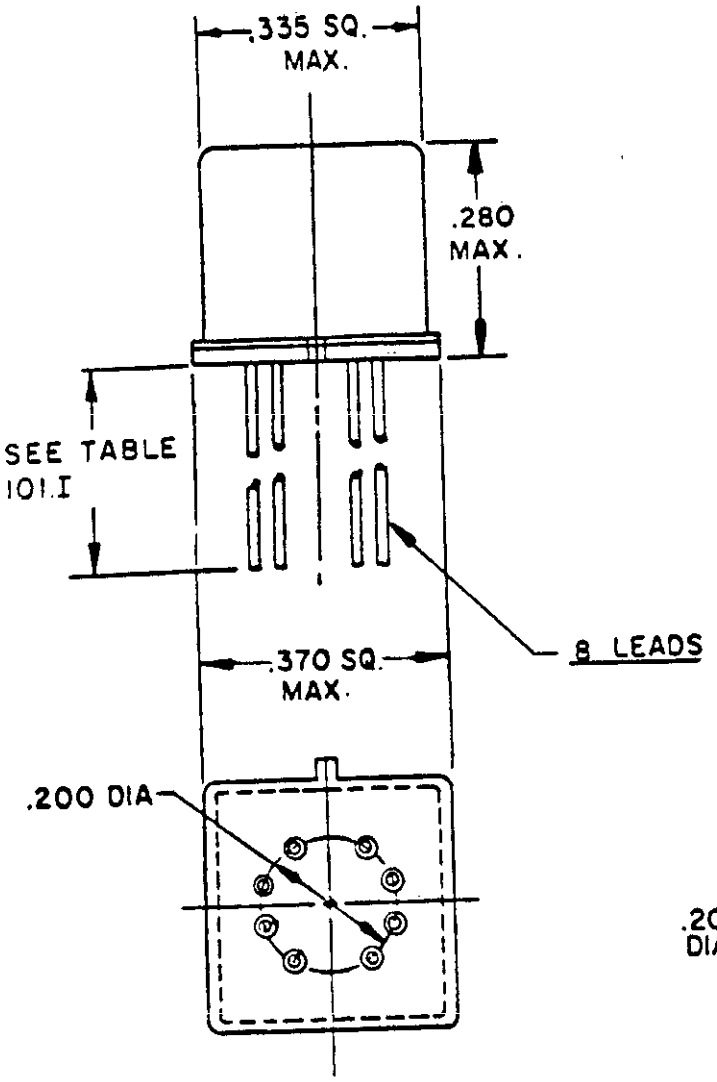

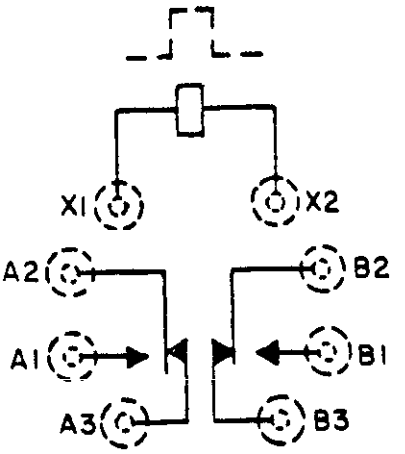

CIRCUIT DIAGRAM
TERMINAL VIEW

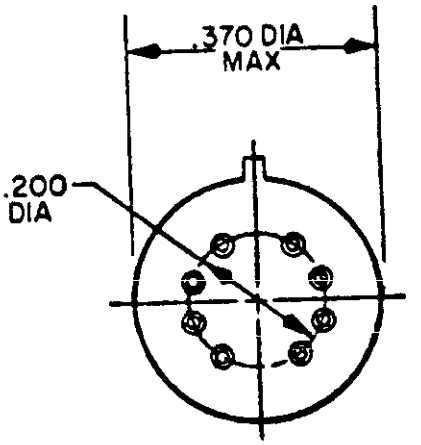

Shape optional within the envelope dimension.

INCHES	MM
.200	5.08
.280	7.11
.335	8.51
.370	9.40

FIGURE 101-7. Relay, EM, ER, DPDT, low level to 1 ampere (MIL-R-39016/9) - Continued.

Downloaded from http://www.everyspec.com

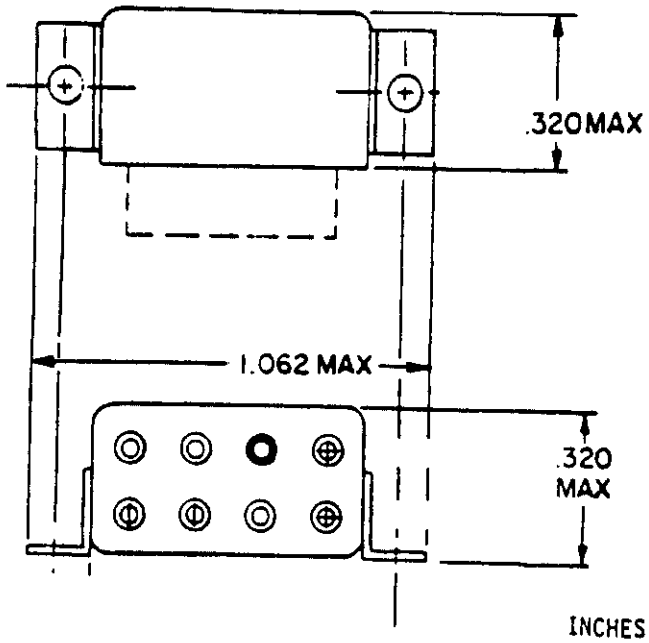

SIDE BRACKET

INCHES	MM
.310	7.87
.320	8.13
.610	15.49
1.062	26.97

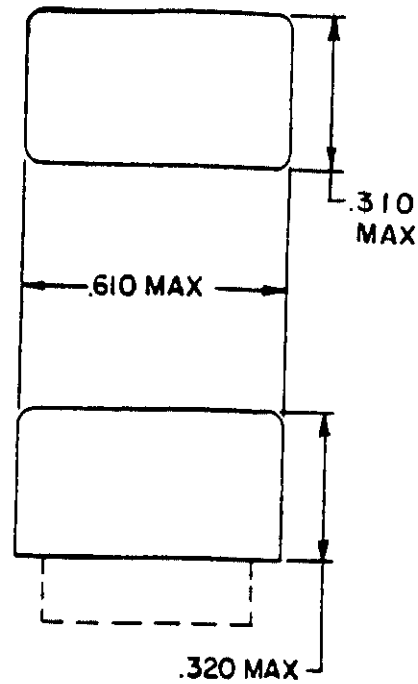

NO MOUNT

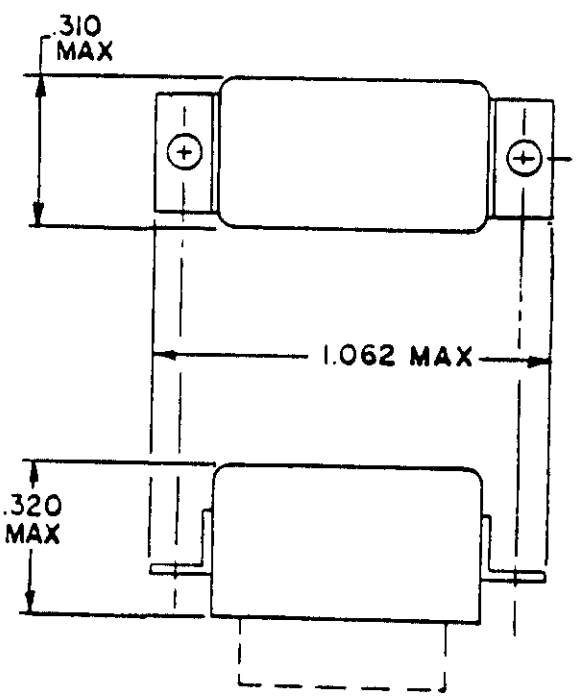

END BRACKET

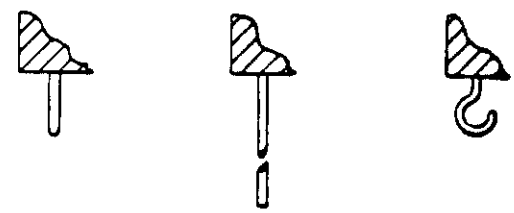

PIN(PC) WIRE LUG

TERMINALS

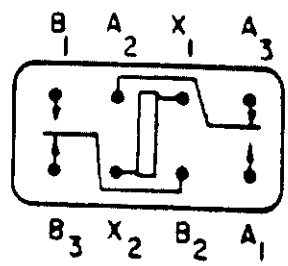

CIRCUIT DIAGRAM

FIGURE 101-8. Relay, EM, ER, DPDT, low level to 2 amperes (MIL-R-39016/13).

Downloaded from http://www.everyspec.com

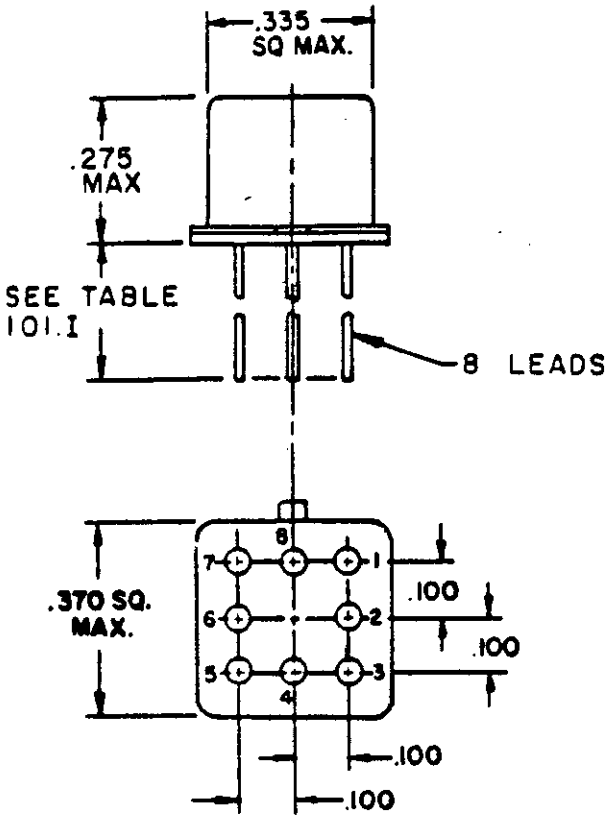

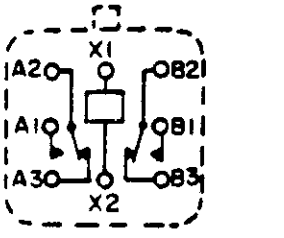

CIRCUIT DIAGRAM
TERMINAL VIEW

INCHES	MM
.100	2.54
.275	6.99
.335	8.51
.370	9.40

FIGURE 101-9. Relay, EM, ER, DPDT, low level to 1 ampere, terminals 0.100 inch grid pattern (MIL-R-39016/17).

Downloaded from http://www.everyspec.com

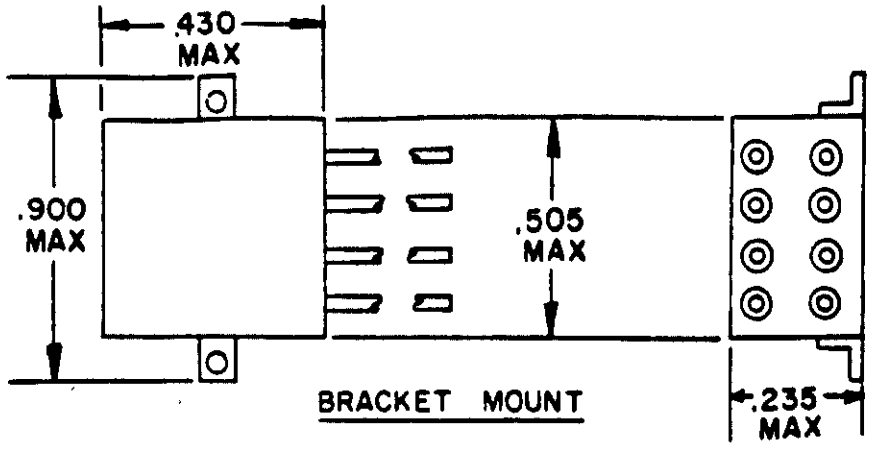

BRACKET MOUNT

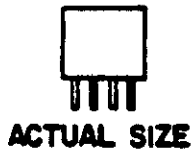

ACTUAL SIZE

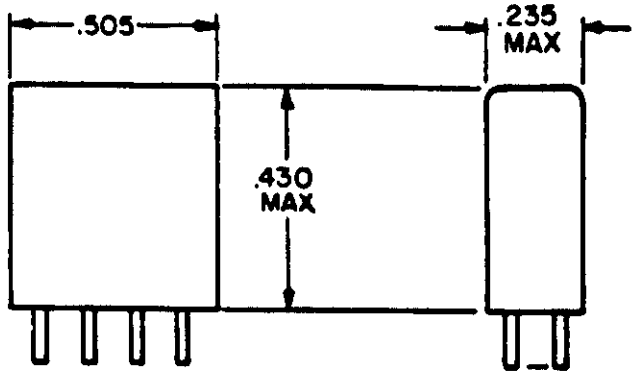

NO MOUNT

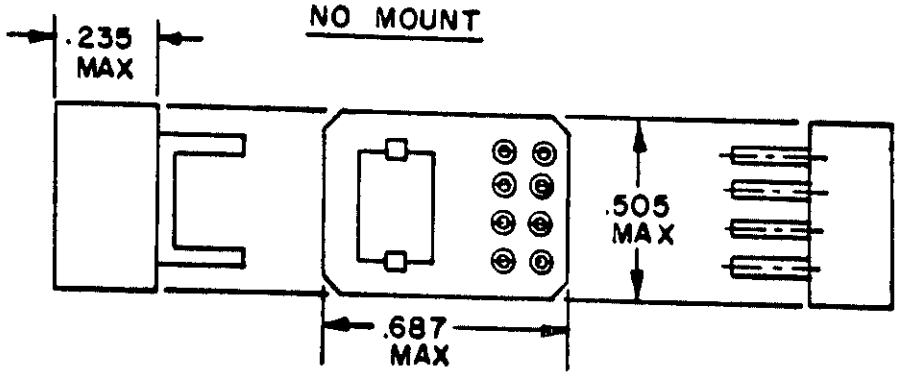

TAB MOUNT

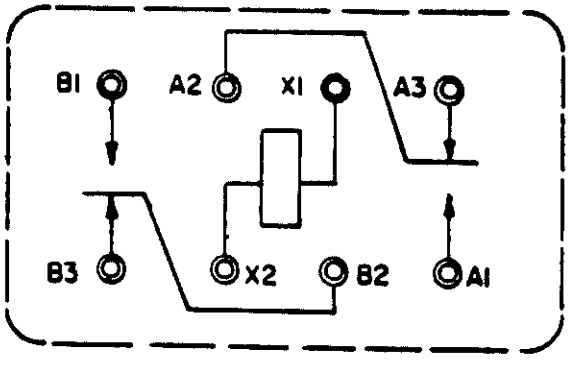

CIRCUIT DIAGRAM, TERMINAL VIEW

INCHES	MM
.235	5.97
.430	10.92
.505	12.83
.687	17.45
900	22.86

FIGURE 101-10. Relay, EM, ER, DPDT, low level to 1 ampere (MIL-R-39016/34).

Downloaded from http://www.everyspec.com

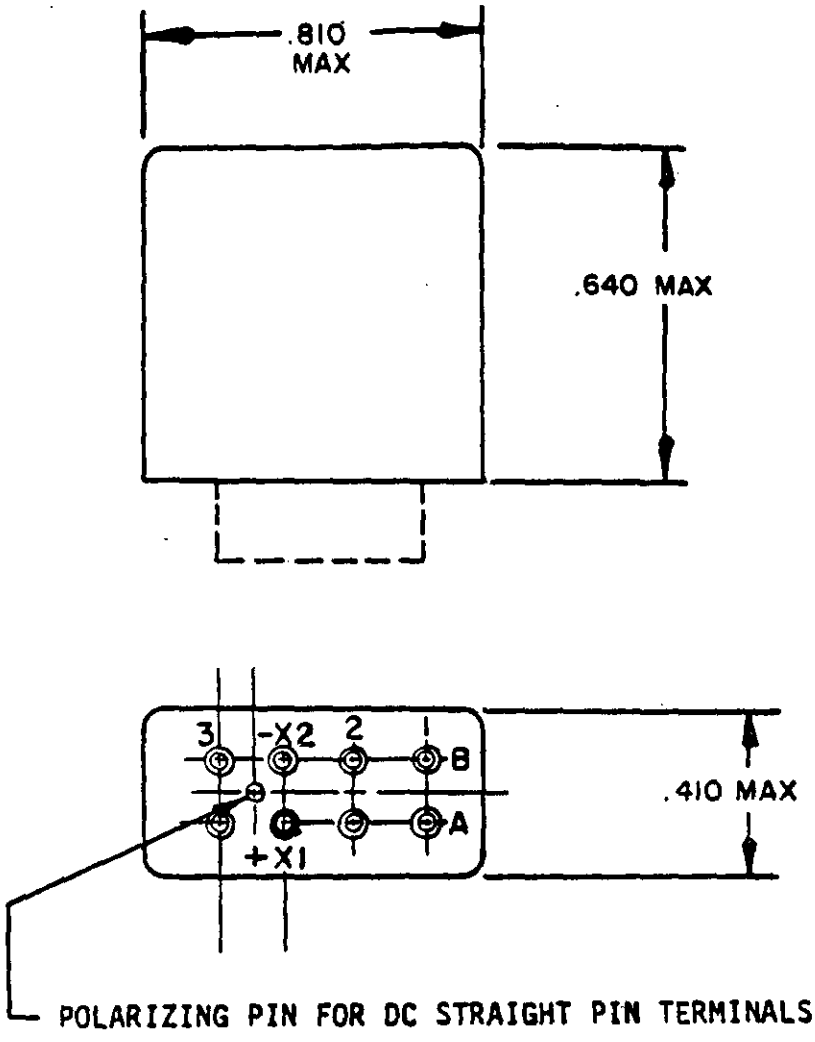

CONFIGURATION A

FIGURE 101-11. Relay, EM, ER, DPDT, low level to 5 amperes (MIL-R-6106/27).

Downloaded from http://www.everyspec.com

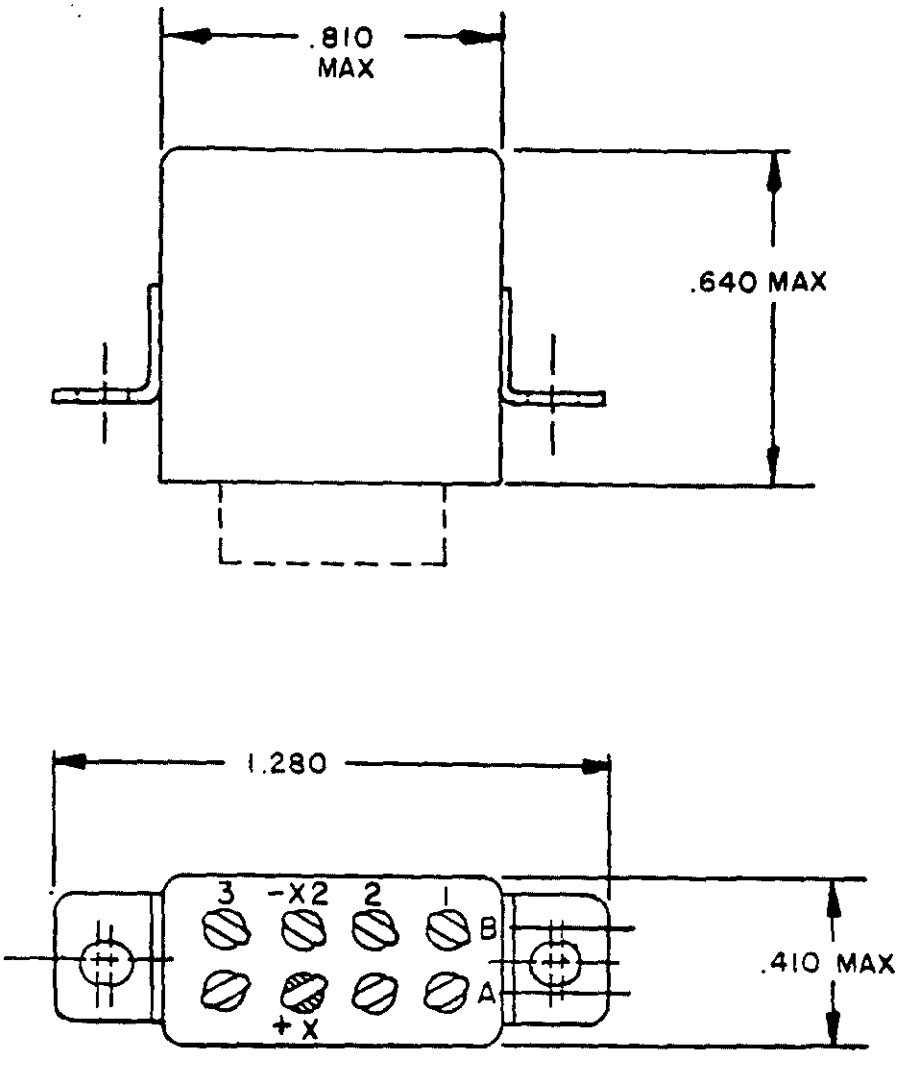

CONFIGURATION B

FIGURE 101-11. Relay, EM, ER, DPDT, low level to 5 amperes (MIL-R-6106/27) - Continued.

Downloaded from http://www.everyspec.com

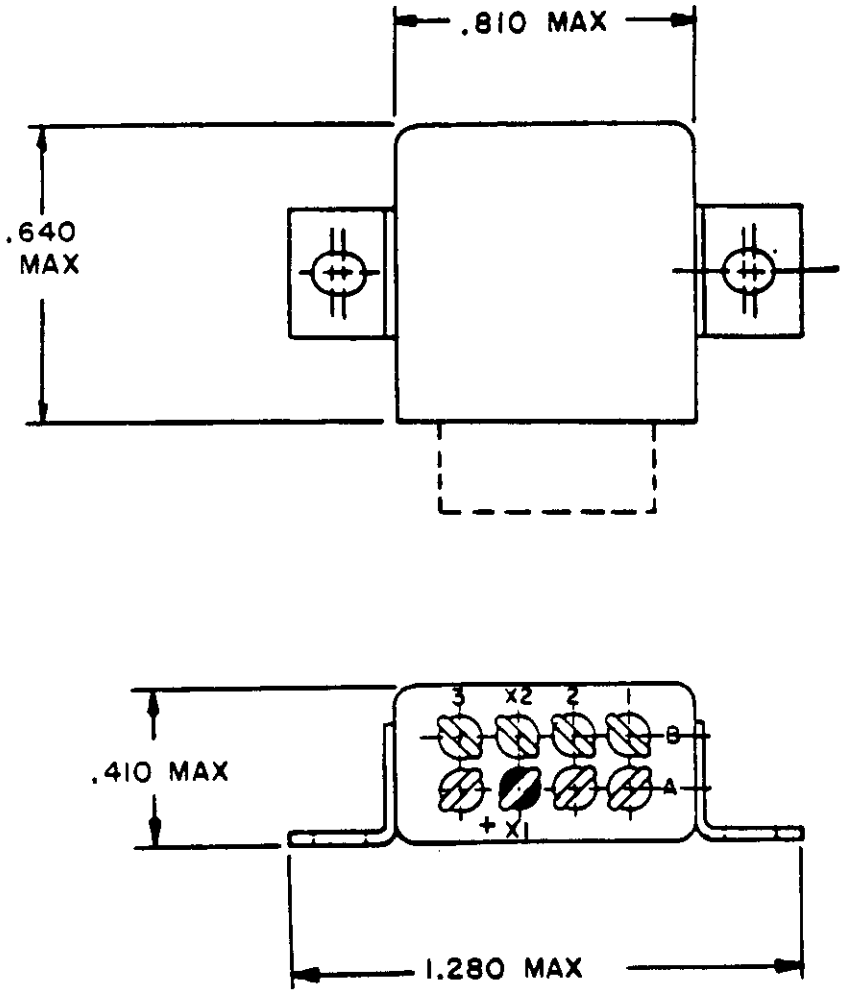

CONFIGURATION C

FIGURE 101-11. Relay, EM, ER, DPDT, low level to 5 amperes (MIL-R-6106/27) - Continued.

Downloaded from http://www.everyspec.com

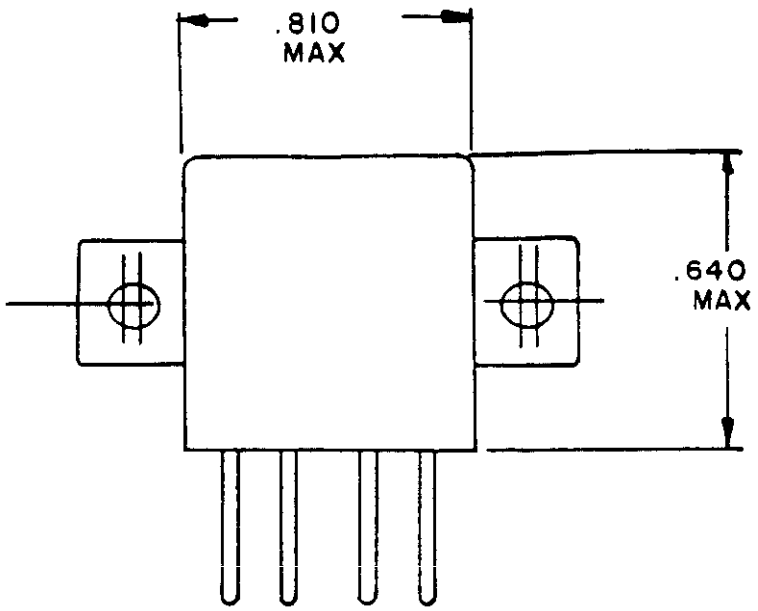

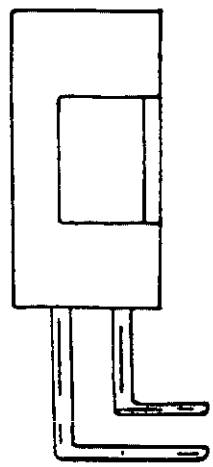

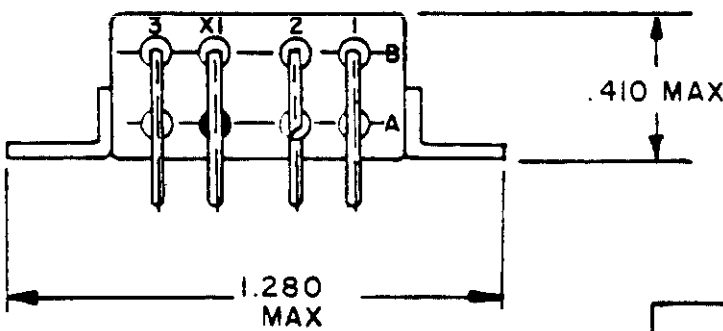

INCHES	MM
.410	10.41
.640	16.26
.810	20.57
1.280	32.51

CONFIGURATION C (Continued)

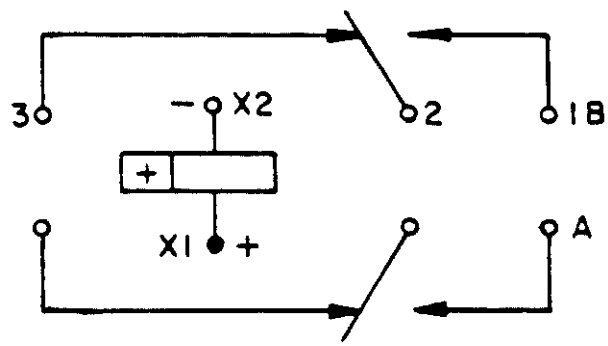

CIRCUIT DIAGRAM

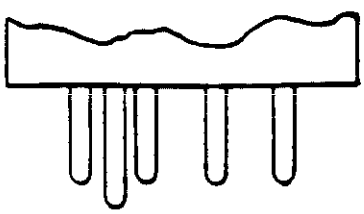

SOLDER PIN

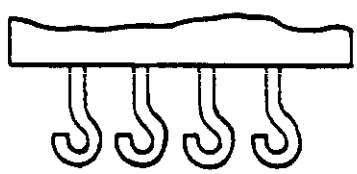

SOLDER HOOK

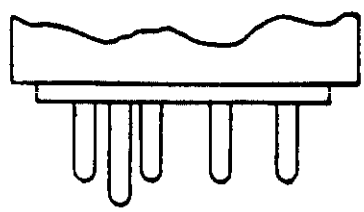

SOCKET PIN

FIGURE 101-11. Relay, EM, ER, DPDT, low level to 5 amperes (MIL-R-6106/27) - Continued.

Downloaded from http://www.everyspec.com

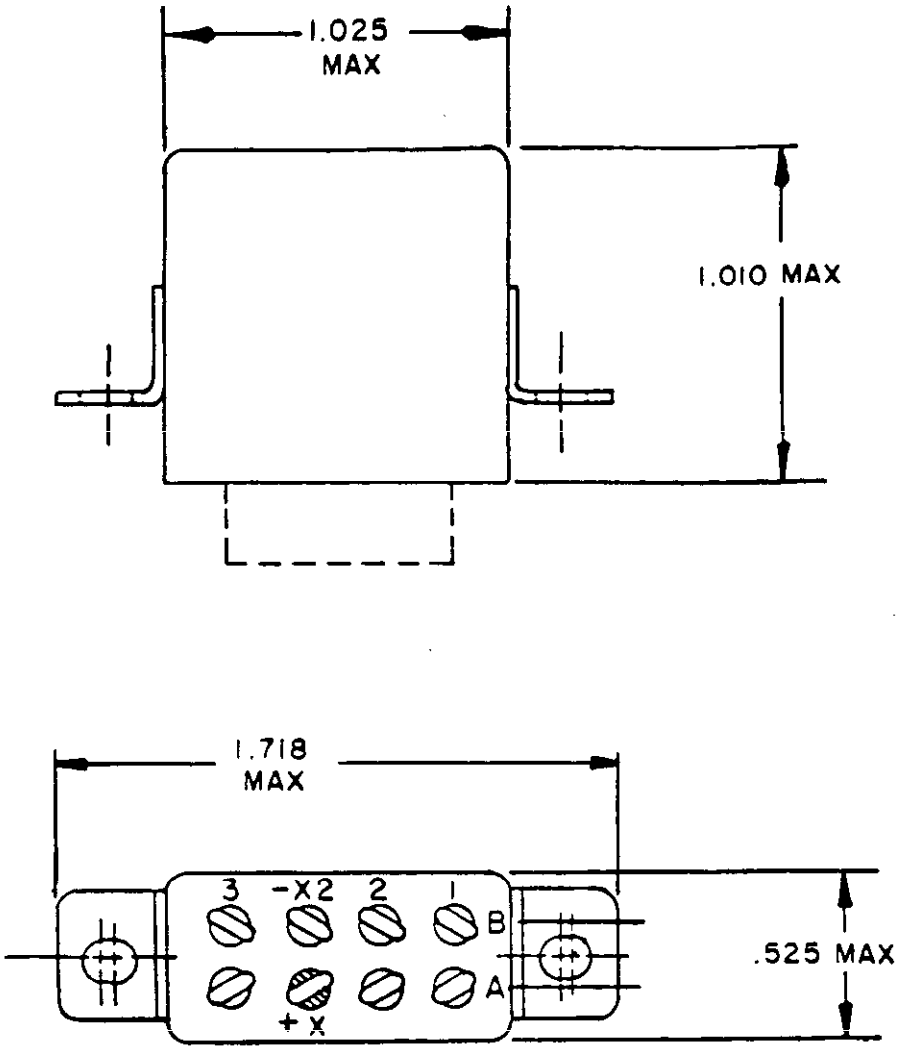

CONFIGURATION 1

FIGURE 101-12. Relay, EM, ER, DPDT, 10 amperes (MS27401).

Downloaded from http://www.everyspec.com

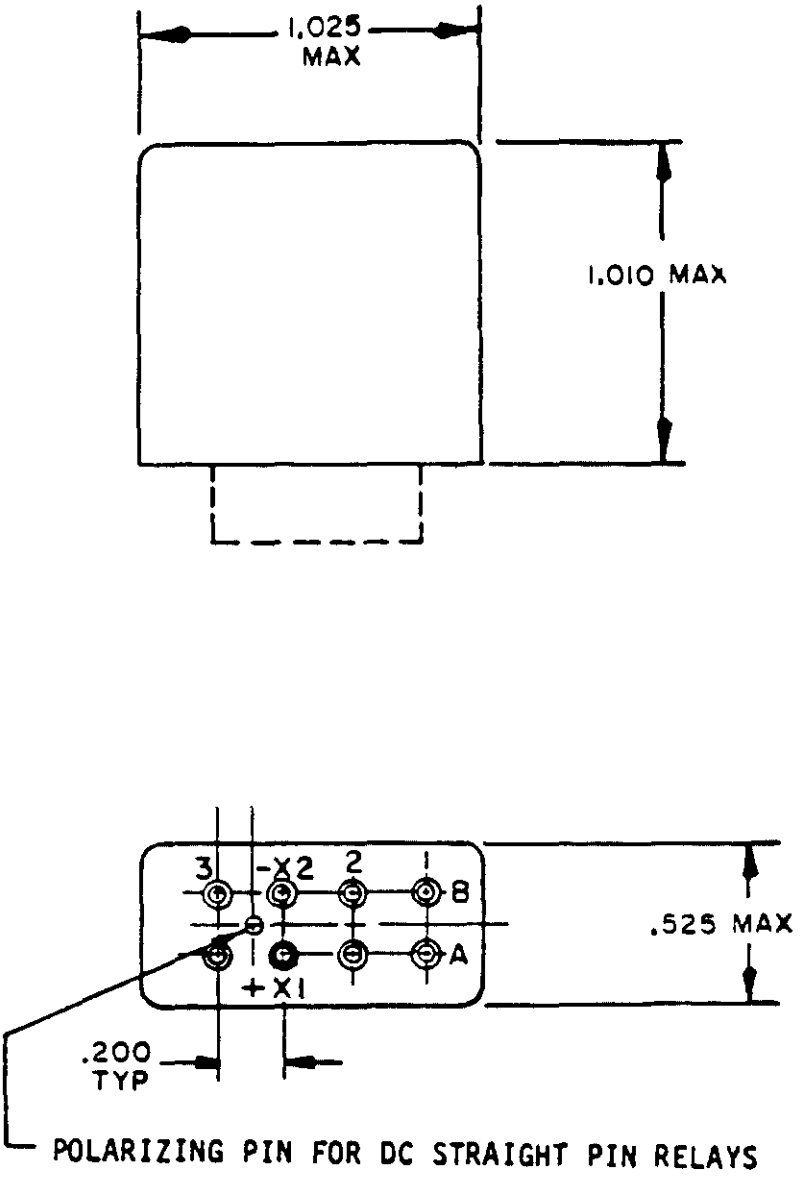

CONFIGURATION 3

FIGURE 101-12. Relay, EM, ER, DPDT, 10 amperes (MS27401) - Continued.

Downloaded from http://www.everyspec.com

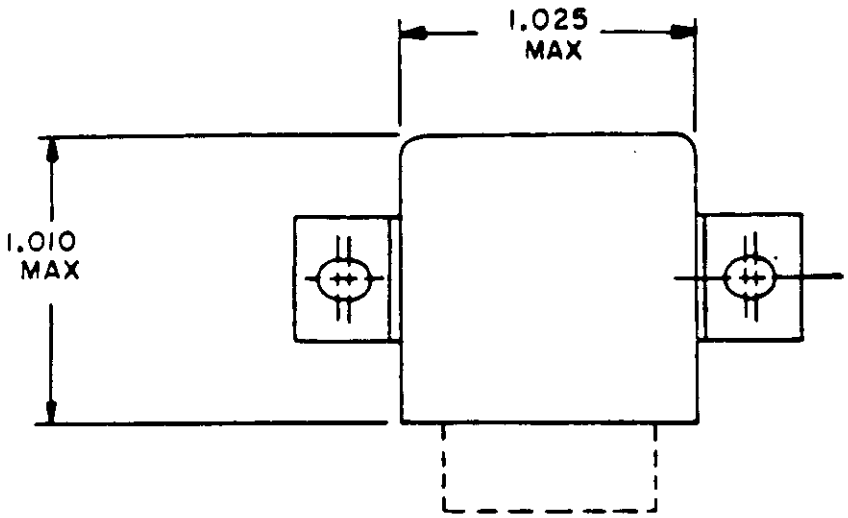

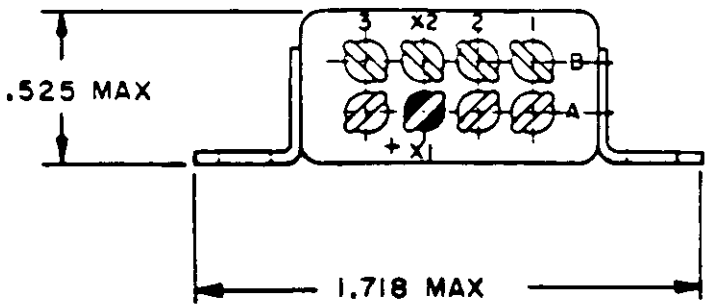

CONFIGURATION 2

FIGURE 101-12. Relay, EM, ER, DPDT, 10 amperes (MS27401) - Continued.

Downloaded from http://www.everyspec.com

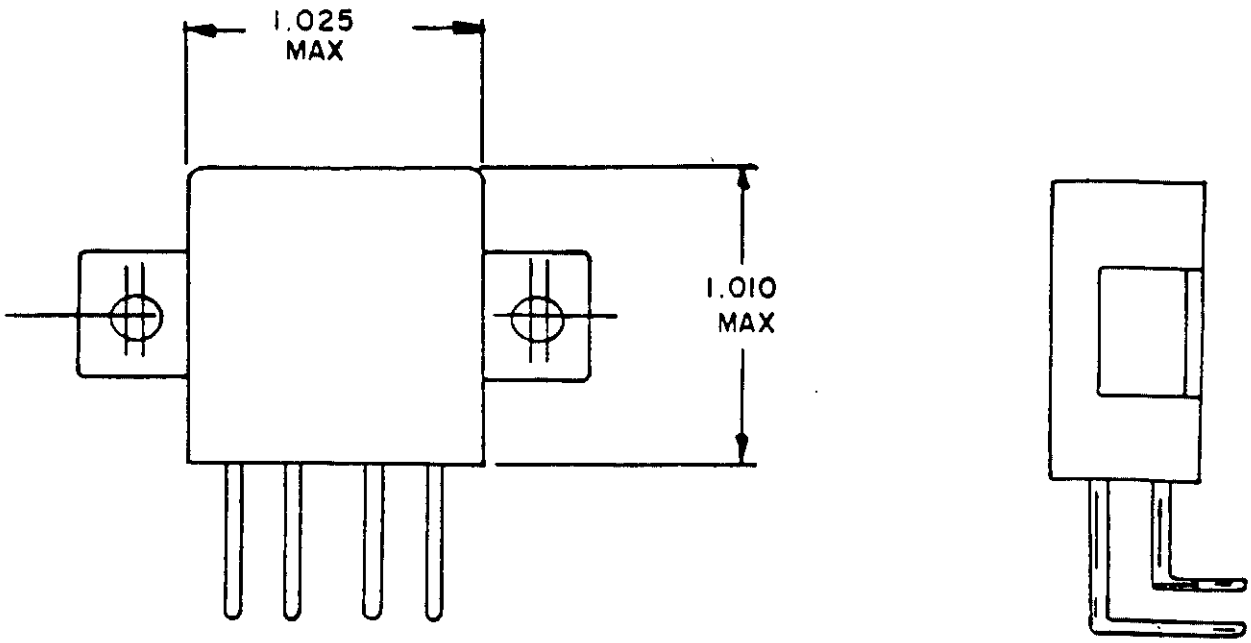

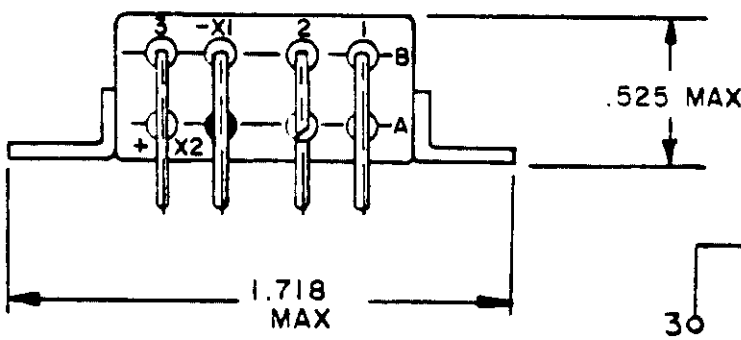

INCHES	MM
.525	13.34
1.010	25.65
1.025	26.04
1.718	43.64

FIGURE 4

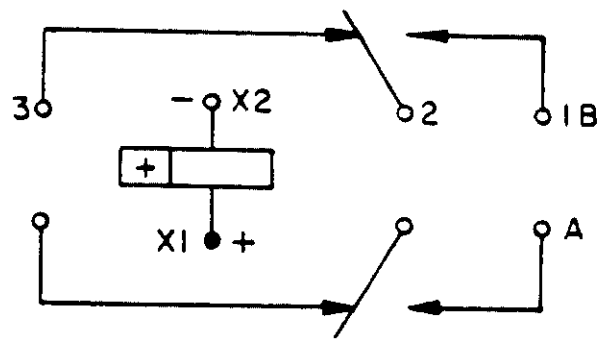

CIRCUIT DIAGRAM

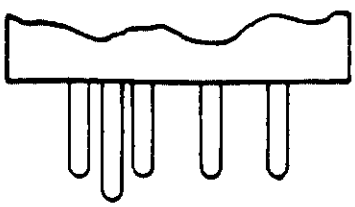

SOLDER PIN

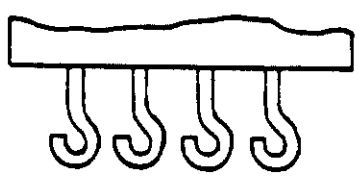

SOLDER HOOK

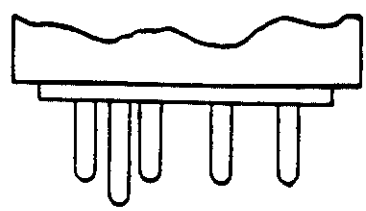

SOCKET PIN

FIGURE 101-12. Relay, EM, ER, DPDT, 10 amperes (MS27401) - Continued.

Downloaded from http://www.everyspec.com

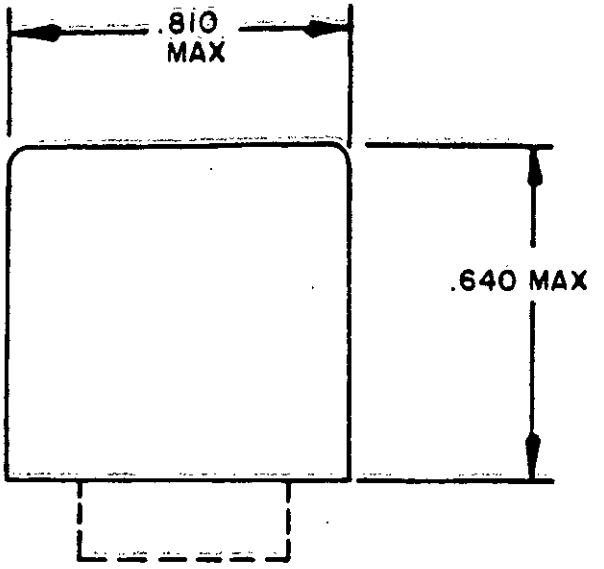

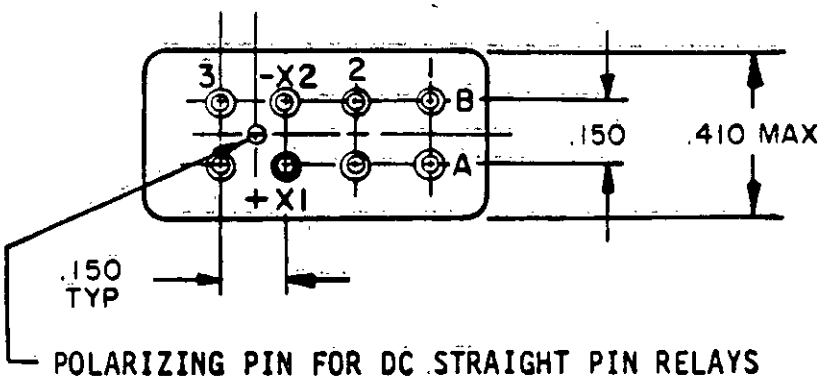

CONFIGURATION A

FIGURE 101-13. Relay, EM, ER, DPDT, low level to 5 amperes, coil suppressed (MIL-R-6106/27).

Downloaded from http://www.everyspec.com

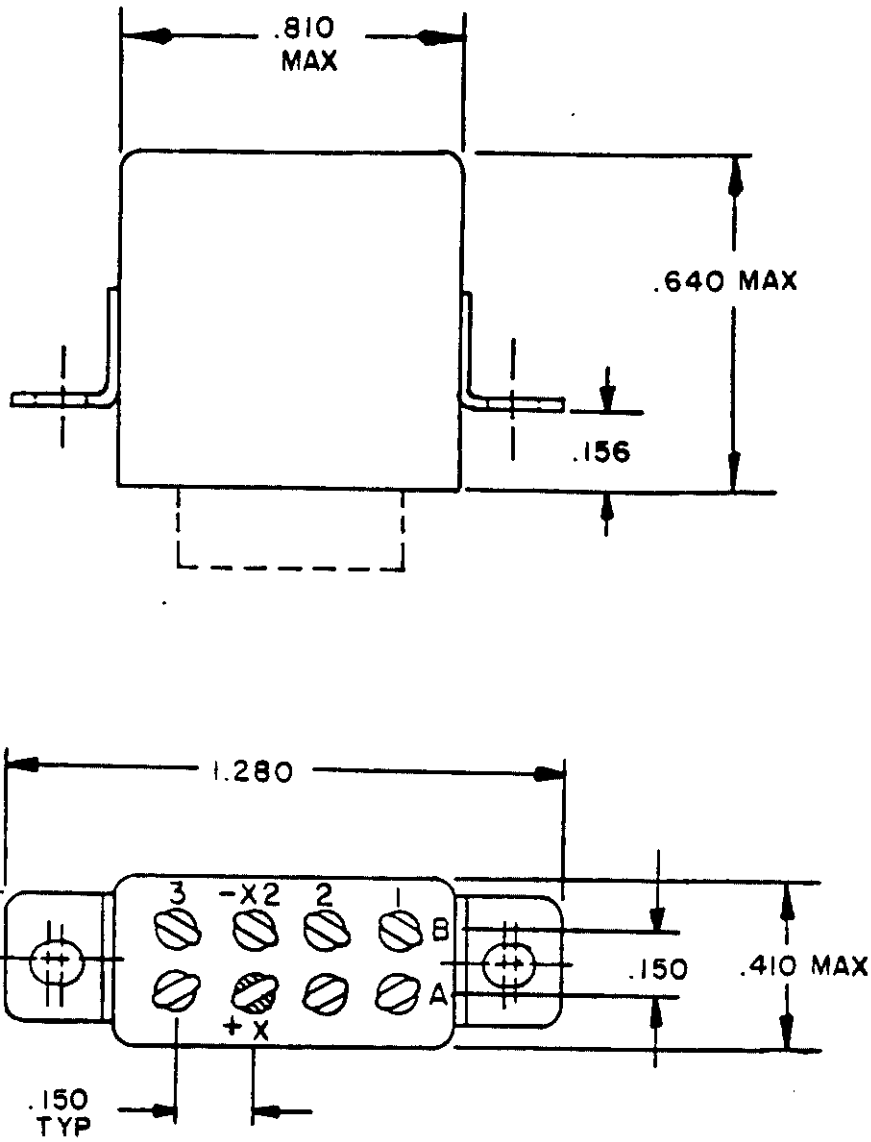

CONFIGURATION B

FIGURE 101-13. Relay, EM, ER, DPDT, low level to 5 amperes, coil suppressed (MIL-R-6106/27) - Continued.

Downloaded from http://www.everyspec.com

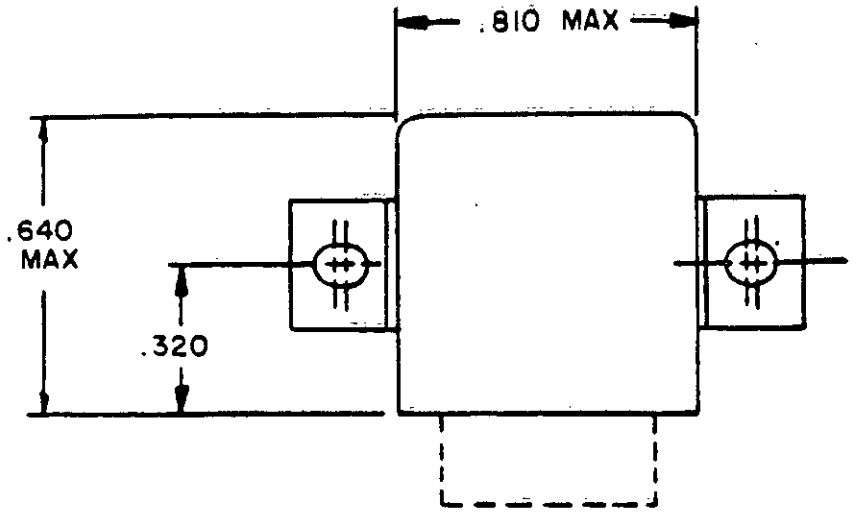

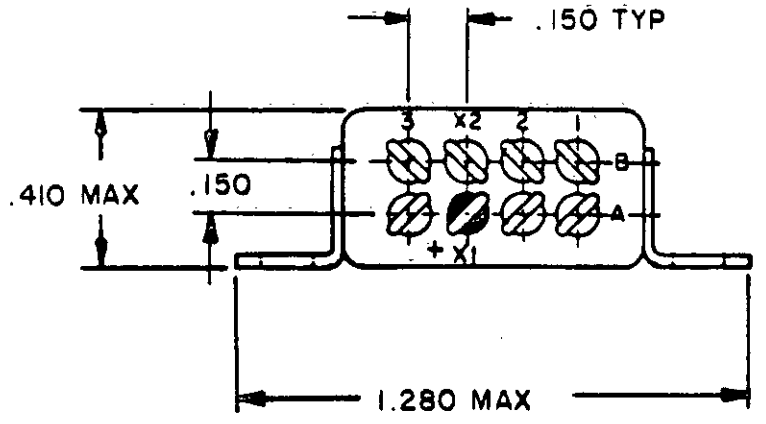

CONFIGURATION C

FIGURE 101-13. Relay, EM, ER, DPDT, low level to 5 amperes, coil suppressed (MIL-R-6106/27) - Continued.

Downloaded from http://www.everyspec.com

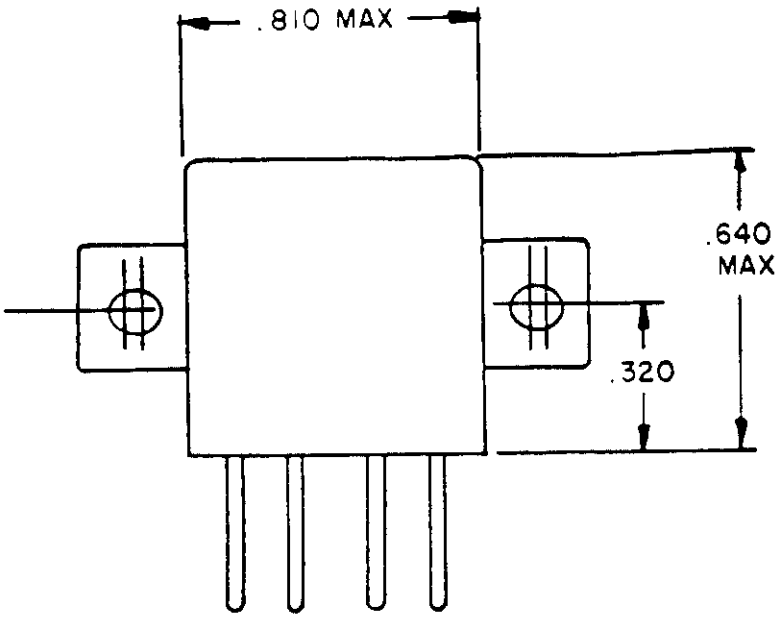

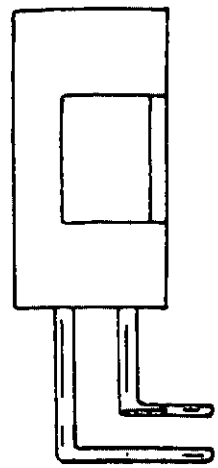

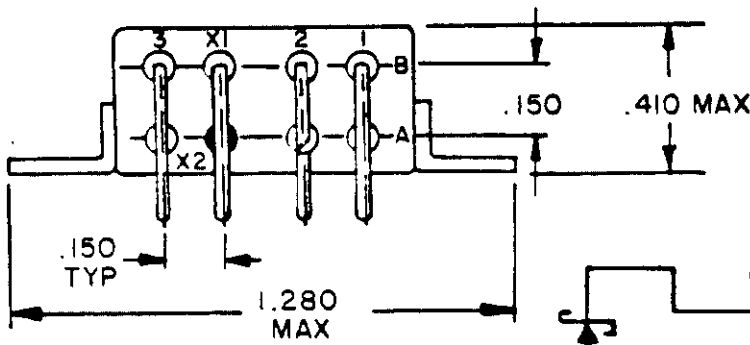

CONFIGURATION C (Continued)

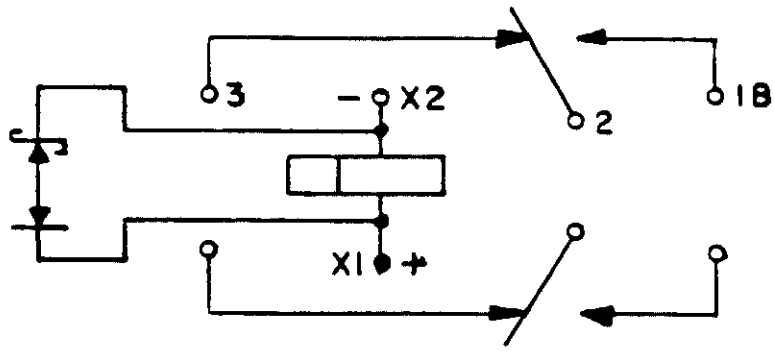

CIRCUIT DIAGRAM

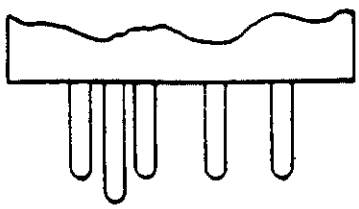

SOLDER PIN

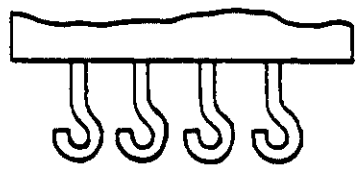

SOLDER HOOK

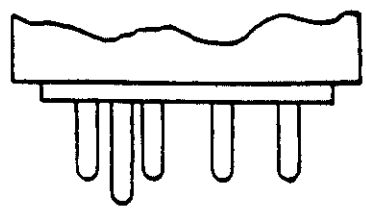

SOCKET PIN

FIGURE 101-13. Relay, EM, ER, DPDT, low level to 5 amperes, coil suppressed (MIL-R-6106/27) - Continued.

Downloaded from http://www.everyspec.com

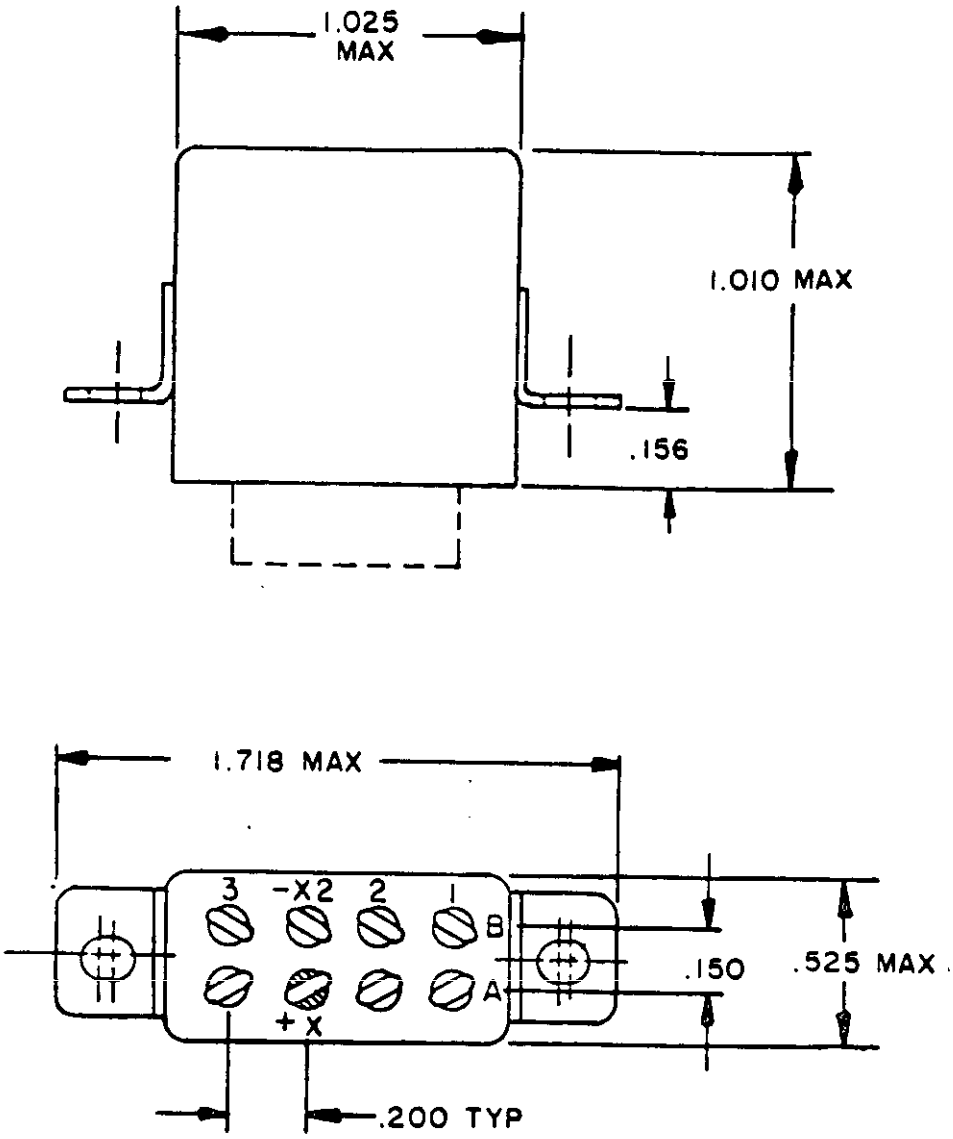

CONFIGURATION I

FIGURE 101-14. Relay, EM, ER, DPDT, 10 amperes, coil suppressed (MS27401).

Downloaded from http://www.everyspec.com

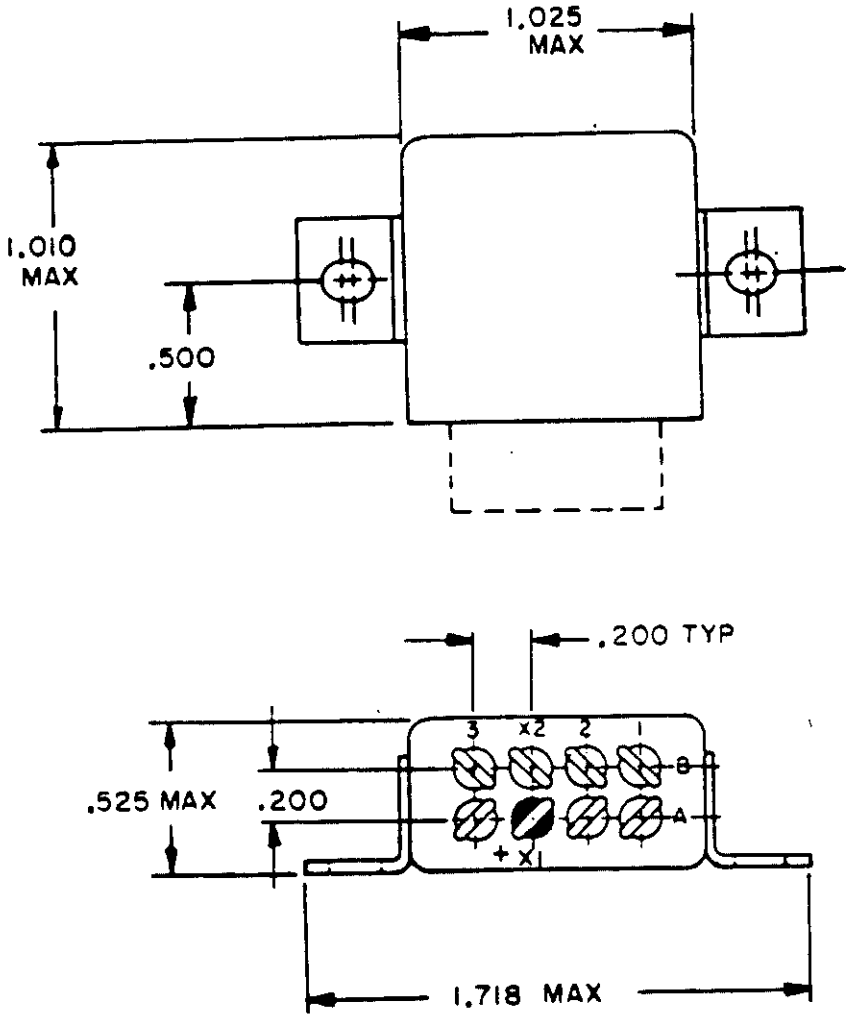

CONFIGURATION 2

FIGURE 101-14. Relay, EM, ER, DPDT, 10 amperes, coil suppressed (MS27401) - Continued.

Downloaded from http://www.everyspec.com

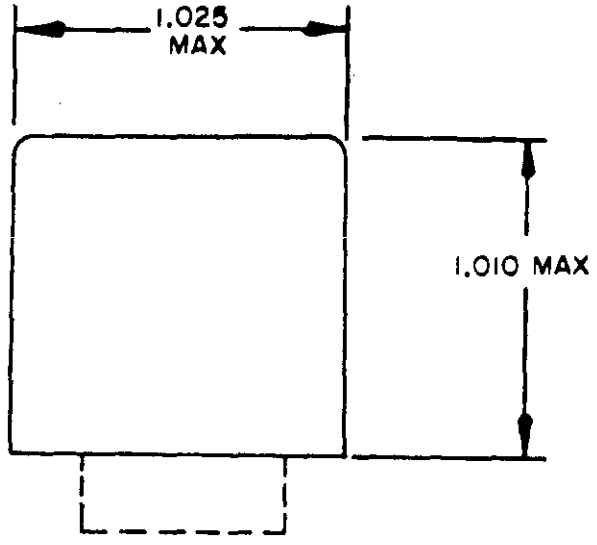

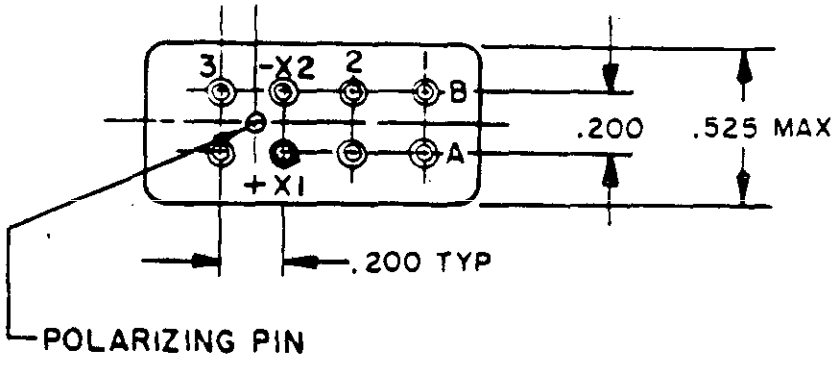

CONFIGURATION 3

for dc straight pin terminals

FIGURE 101-14. Relay, EM, ER, DPDT, 10 amperes, coil suppressed (MS27401) - Continued.

Downloaded from http://www.everyspec.com

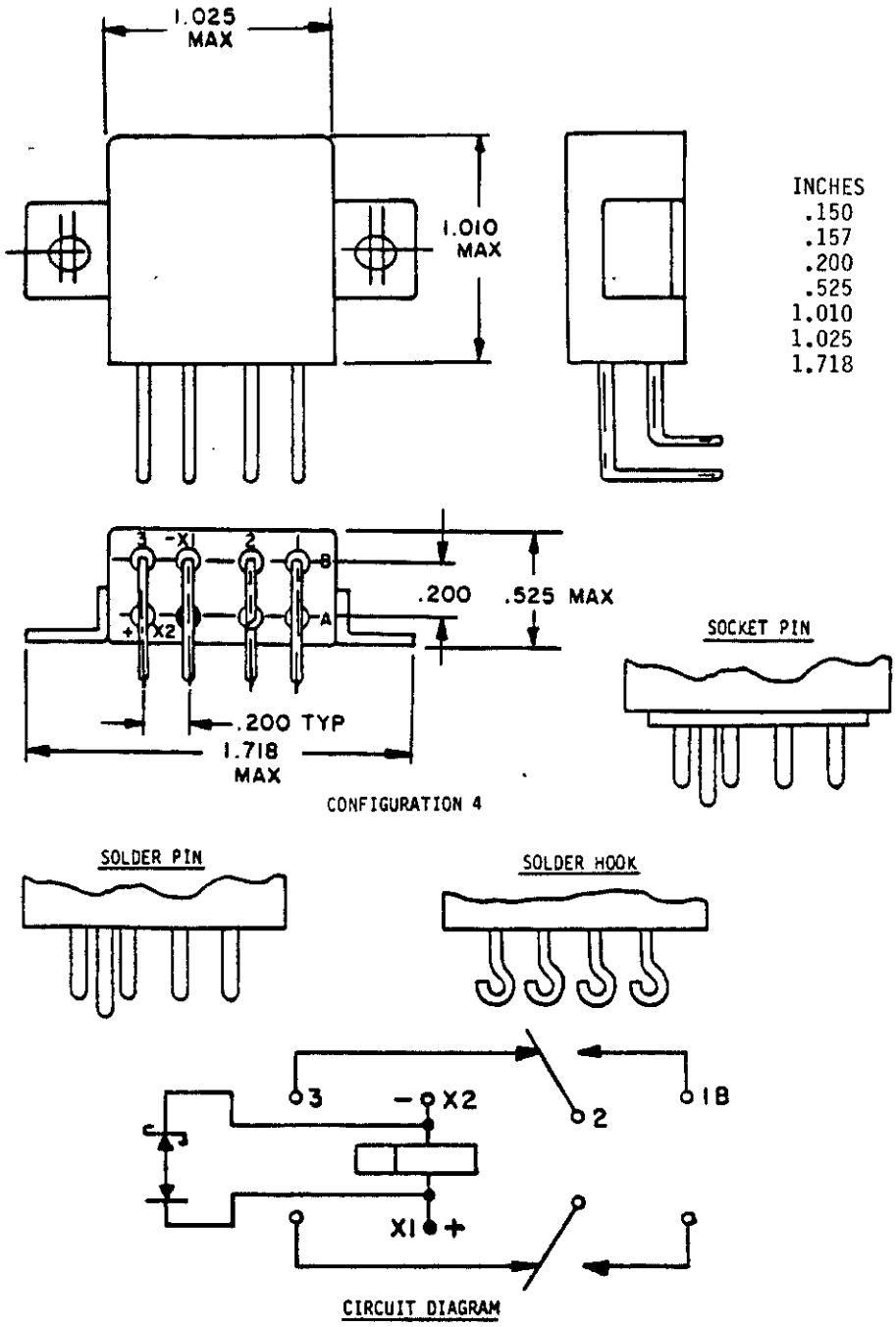

FIGURE 101-14. Relay, EM, ER, DPDT, 10 amperes, coil suppressed (MS27401) - Continued.

Downloaded from http://www.everyspec.com

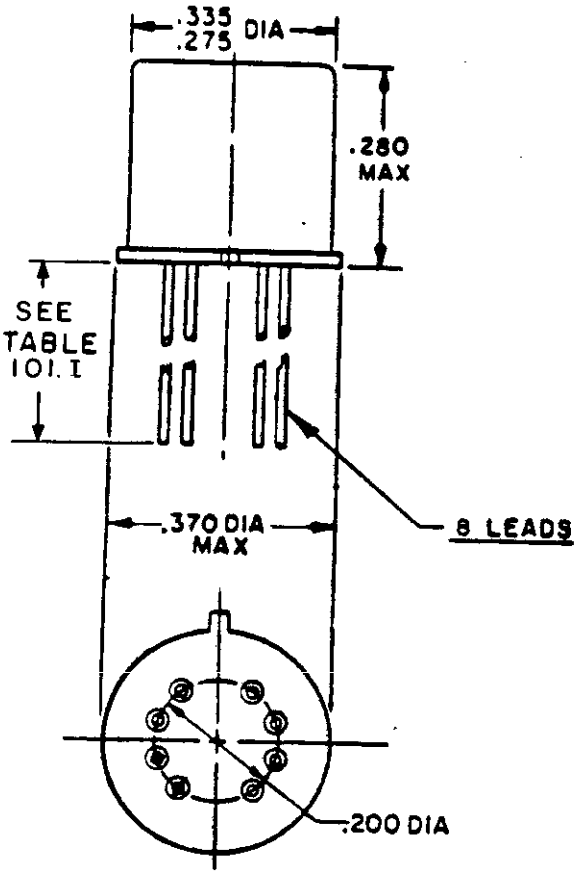

INCHES	MM
.200	5.08
.275	6.99
.280	7.11
.335	8.51
.370	9.40

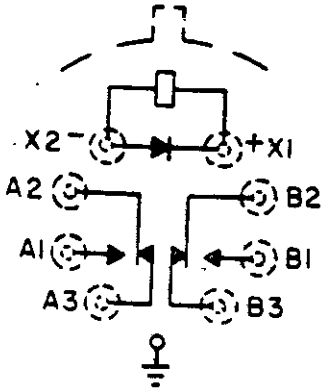

CIRCUIT DIAGRAM
TERMINAL VIEW

FIGURE 101-15. Relay, EM, ER, DPDT, low level to 1 ampere, with internal diode for coil transient suppression (MIL-R-39016/15).

Downloaded from http://www.everyspec.com

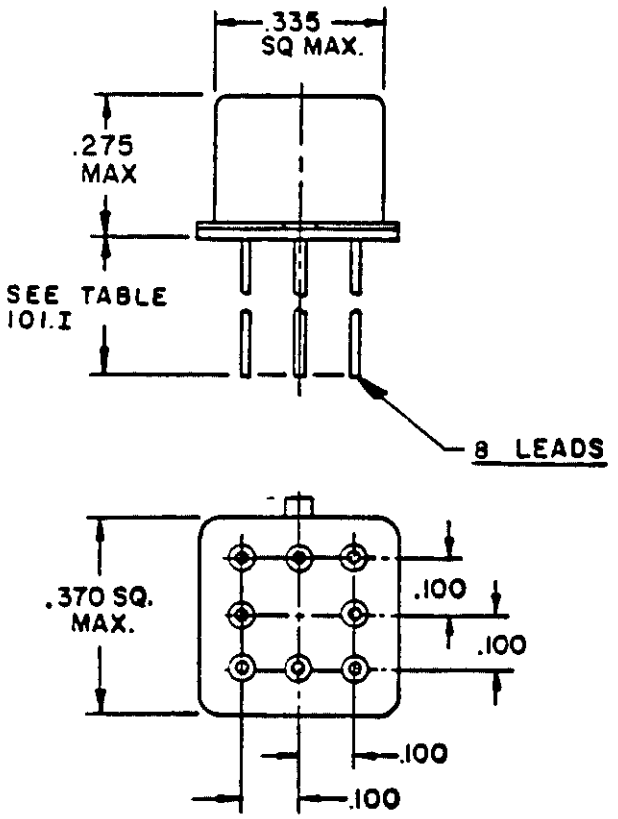

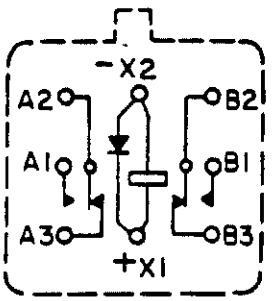

CIRCUIT DIAGRAM
TERMINAL VIEW

INCHES	MM
.100	2.54
.275	6.99
.335	8.51
.370	9.40

FIGURE 101-16. Relay, EM, ER, DPDT, low level to 1 ampere, with internal diode for coil transient suppression, terminals 0.100 inch grid pattern (MIL-R-39016/18).

Downloaded from http://www.everyspec.com

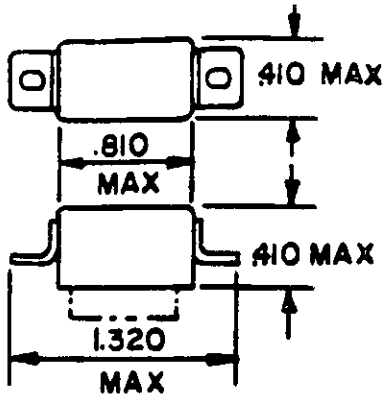

FLANGE MOUNT B

INCHES	MM
.410	10.41
.810	20.57
1.320	33.53

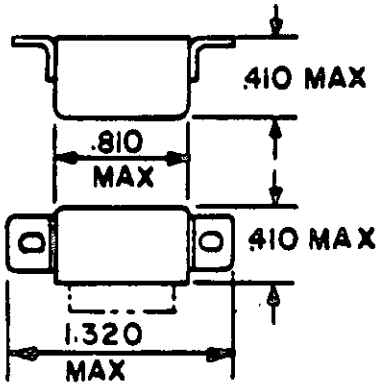

FLANGE MOUNT C

WIRE LEAD
(SOLDER PIN-SP)

SOLDER LUG

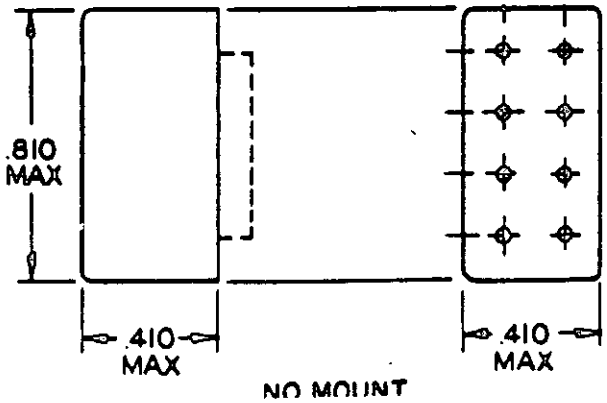

NO MOUNT

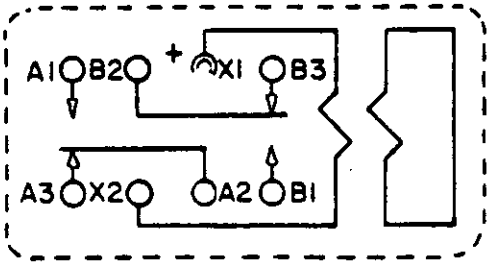

CIRCUIT DIAGRAM
TERMINAL VIEW

FIGURE 101-17. Relay, EM, ER, DPDT, low level to 2 amperes (0.200 inch terminal spacing) coil transient suppressed (MIL-R-39016/22).

Downloaded from http://www.everyspec.com

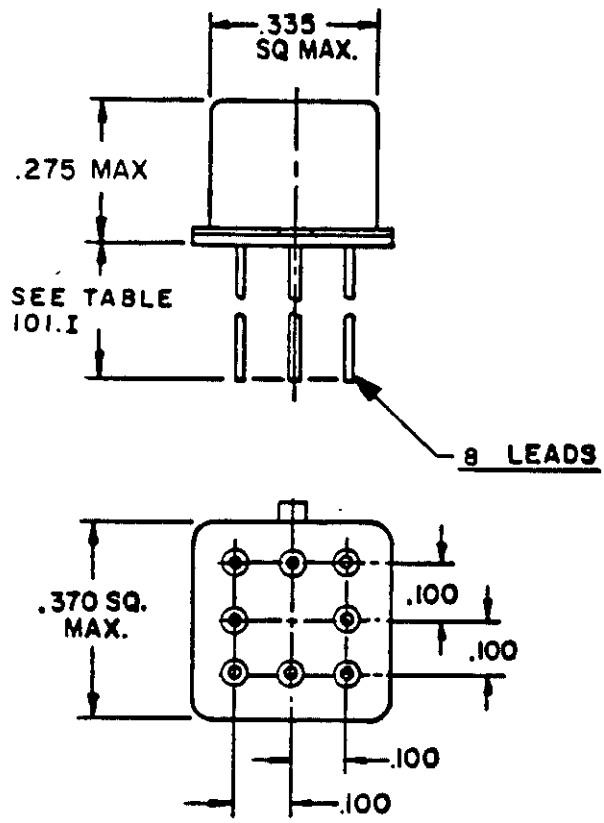

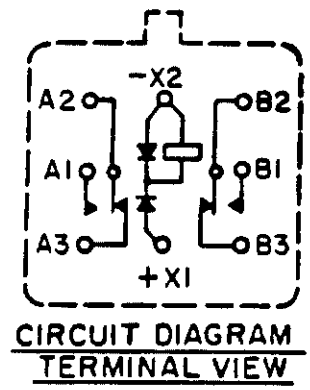

CIRCUIT DIAGRAM
TERMINAL VIEW

INCHES	MM
.100	2.54
.275	6.99
.335	8.51
.370	9.40

FIGURE 101-18. Relay, EM, ER, DPDT, low level to 1 ampere, with internal diodes for coil transient suppression and polarity reversal protection, terminals 0.100 inch grid pattern (MIL-R-39016/19).

Downloaded from http://www.everyspec.com

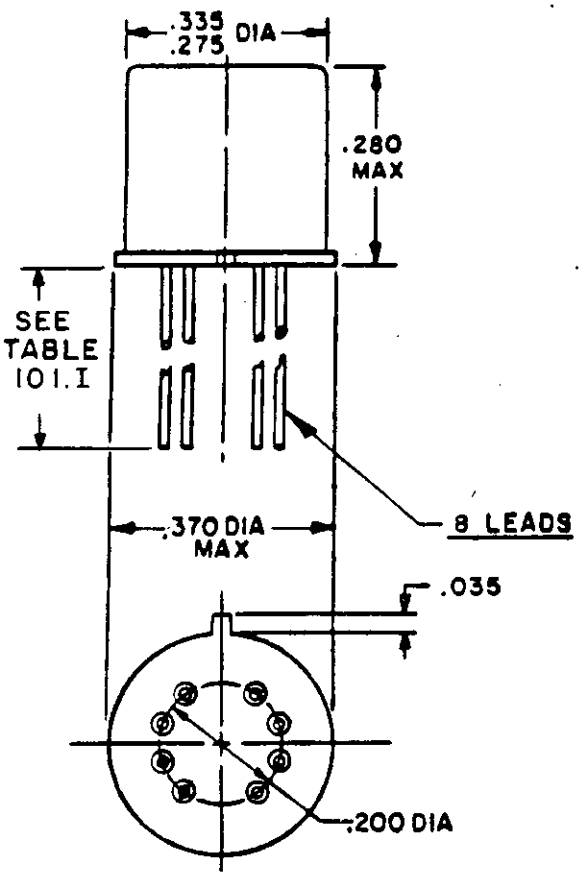

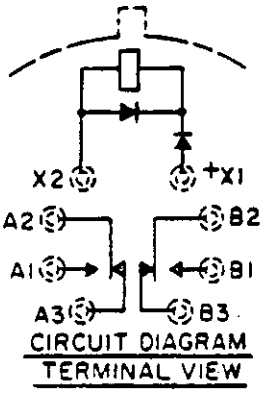

INCHES	MM
.035	0.89
.200	5.08
.275	6.99
.280	7.11
.335	8.51
.370	9.40

FIGURE 101-19. Relay, EM, ER, DPDT, low level to 1 ampere, with internal diode for coil transient suppression and polarity reversal protection (MIL-R-39016/20).

Downloaded from http://www.everyspec.com

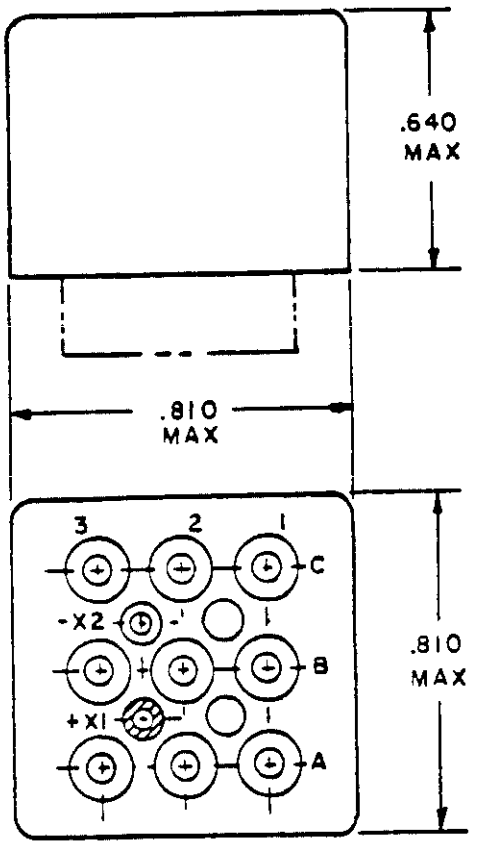

CONFIGURATION A

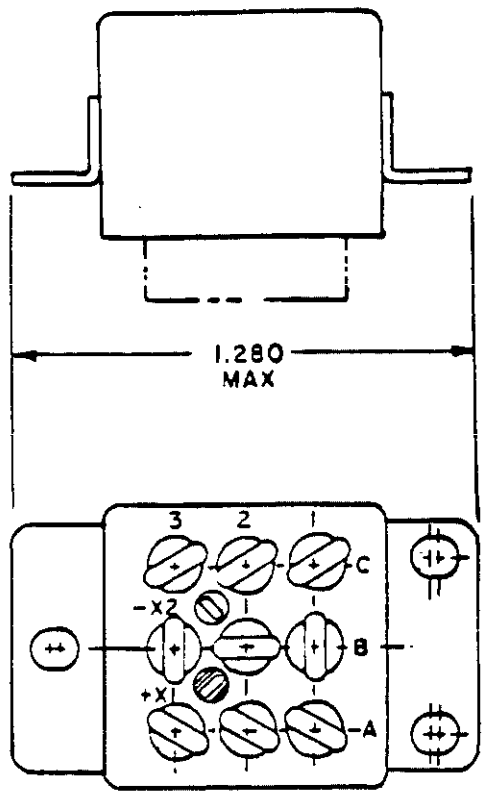

CONFIGURATION B

INCHES	MM
.640	16.26
.810	20.57
1.280	32.51

FIGURE 101-20. Relay, EM, ER, 3PDT, low level to 10 amperes (MIL-R-6106/29).

Downloaded from http://www.everyspec.com

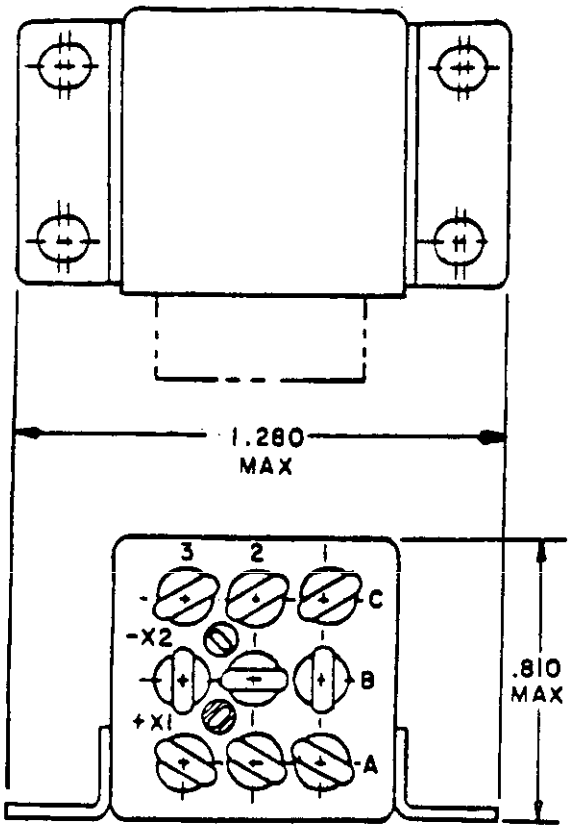

CONFIGURATION C

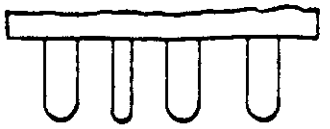

SOLDER PIN

SOCKET PIN

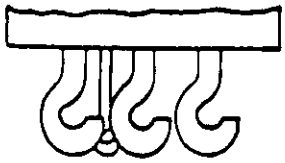

SOLDER HOOK

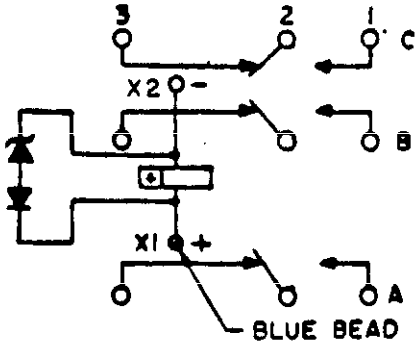

CIRCUIT DIAGRAM

FIGURE 101-20. Relay, EM, ER, 3PDT, low level to 10 amperes (MIL-R-6106/29) - Continued.

Downloaded from http://www.everyspec.com

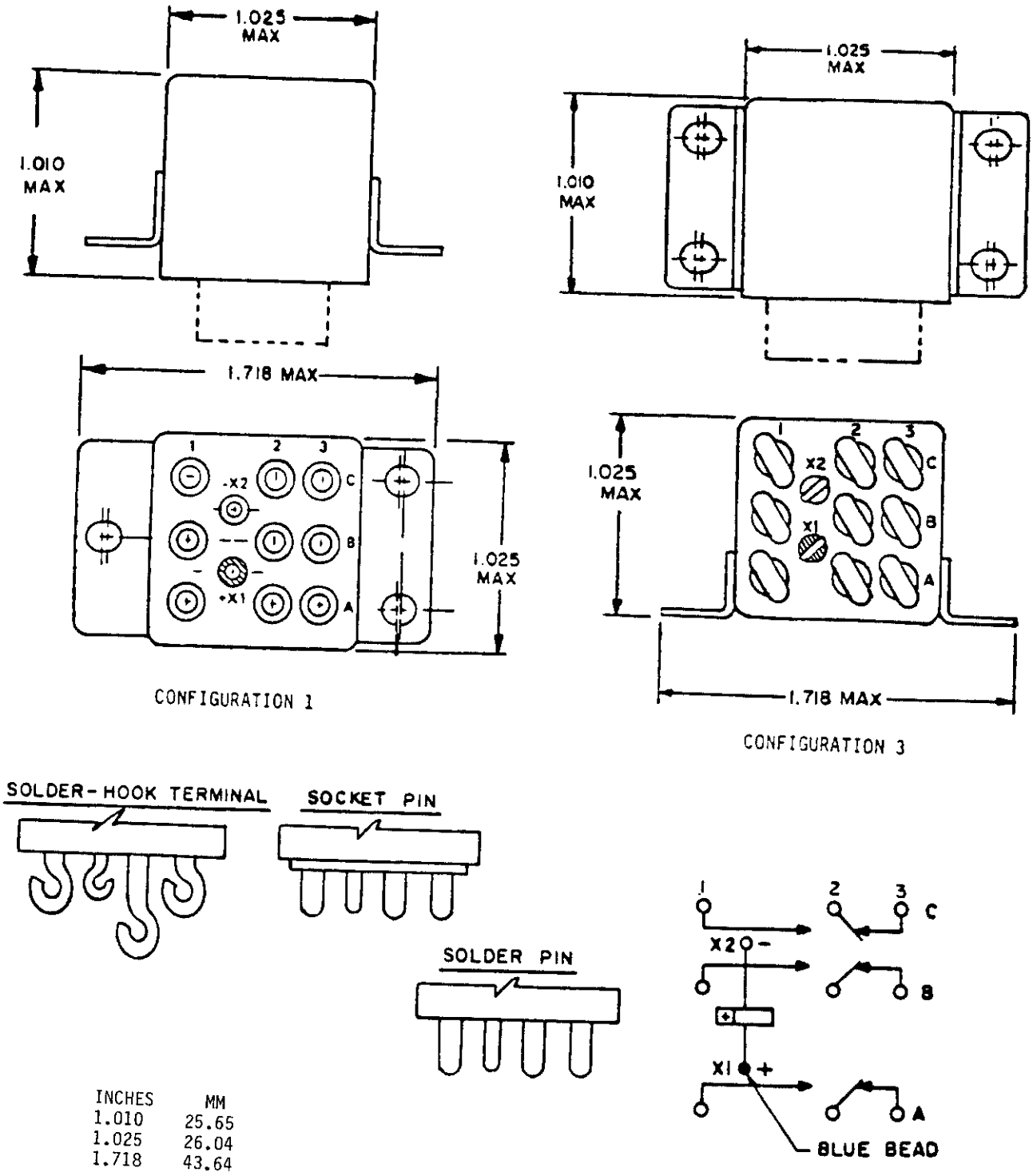

INCHES	MM
1.010	25.65
1.025	26.04
1.718	43.64

FIGURE 101-21. Relay, EM, ER, 3PDT, 25 amperes (MS27743).

Downloaded from http://www.everyspec.com

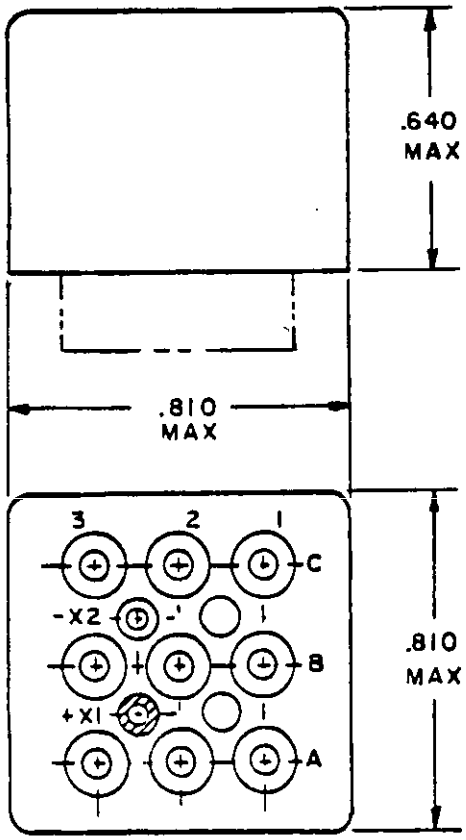

CONFIGURATION A

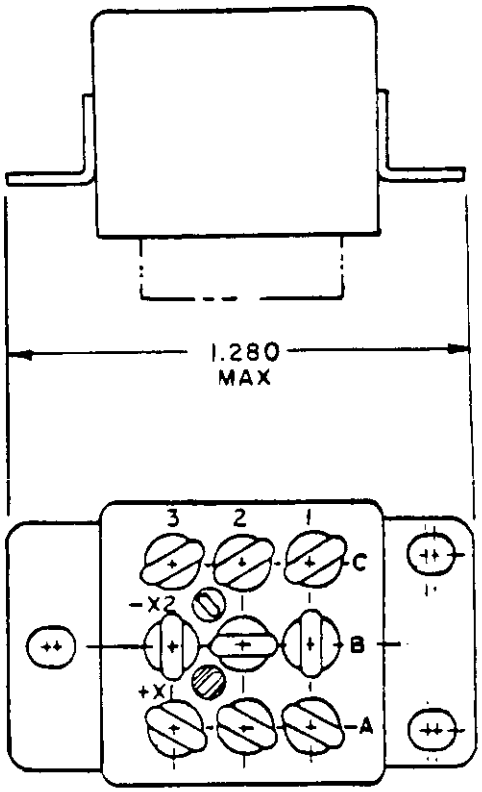

CONFIGURATION B

INCHES	MM
.640	16.26
.810	20.57
1.280	32.51

FIGURE 101-22. Relay, EM, ER, 3PDT, low level to 10 amperes, with coil suppression (MIL-R-6106/29).

Downloaded from http://www.everyspec.com

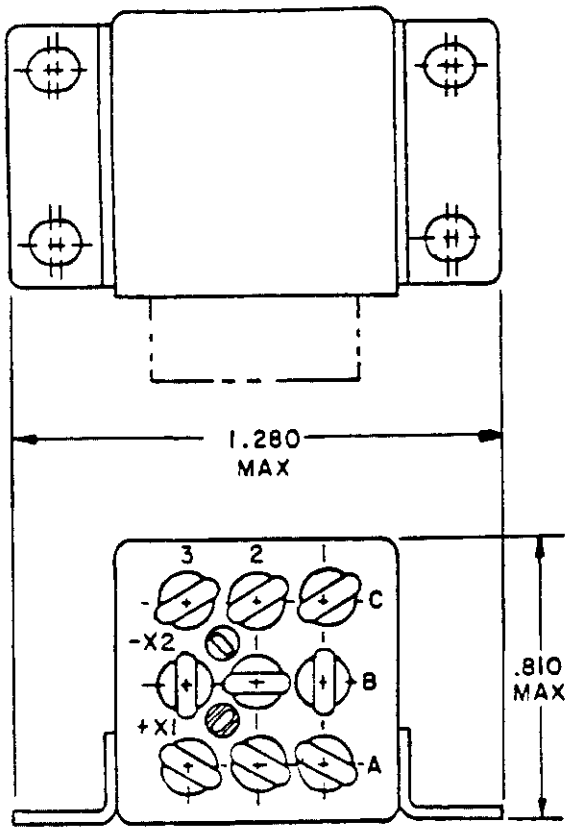

CONFIGURATION C

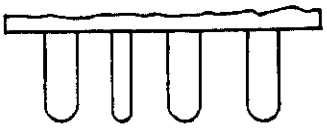

SOLDER PIN

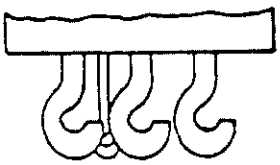

SOLDER HOOK

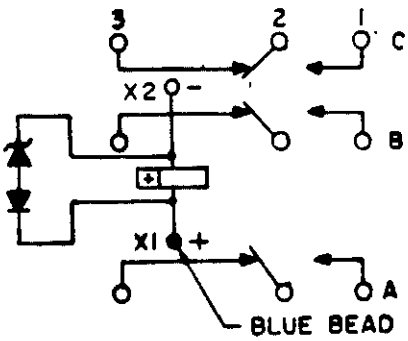

CIRCUIT DIAGRAM

FIGURE 101-22. Relay, EM, ER, 3PDT, low level to 10 amperes (MIL-R-6106/29) - Continued.

Downloaded from http://www.everyspec.com

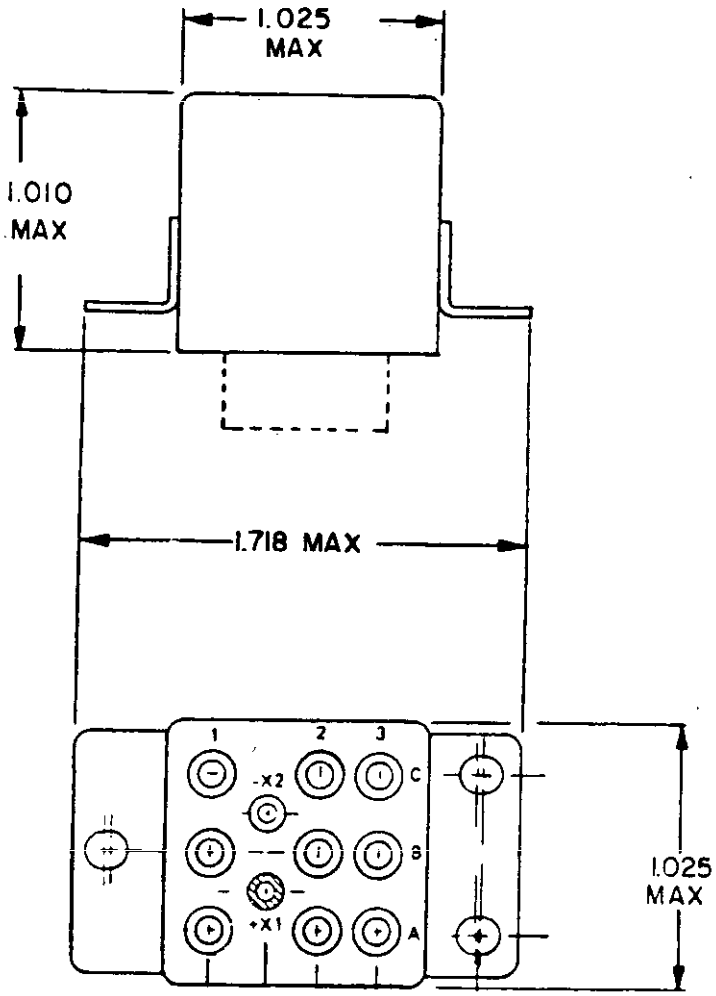

CONFIGURATION A

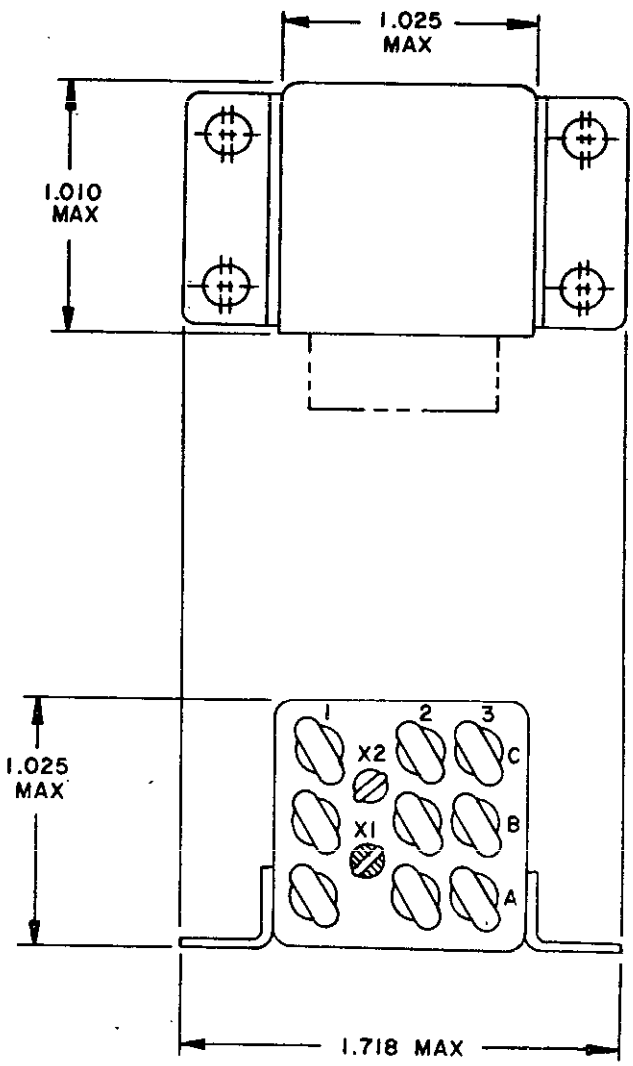

CONFIGURATION C

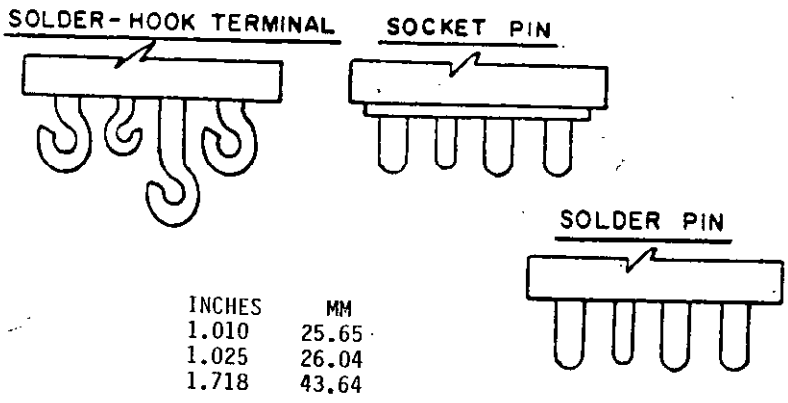

INCHES	MM
1.010	25.65
1.025	26.04
1.718	43.64

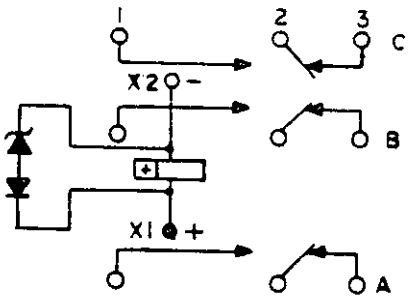

CIRCUIT DIAGRAM

FIGURE 101-23. Relay, EM, ER, 3PDT, 25 amperes, with coil suppression (MS27743).

Downloaded from http://www.everyspec.com

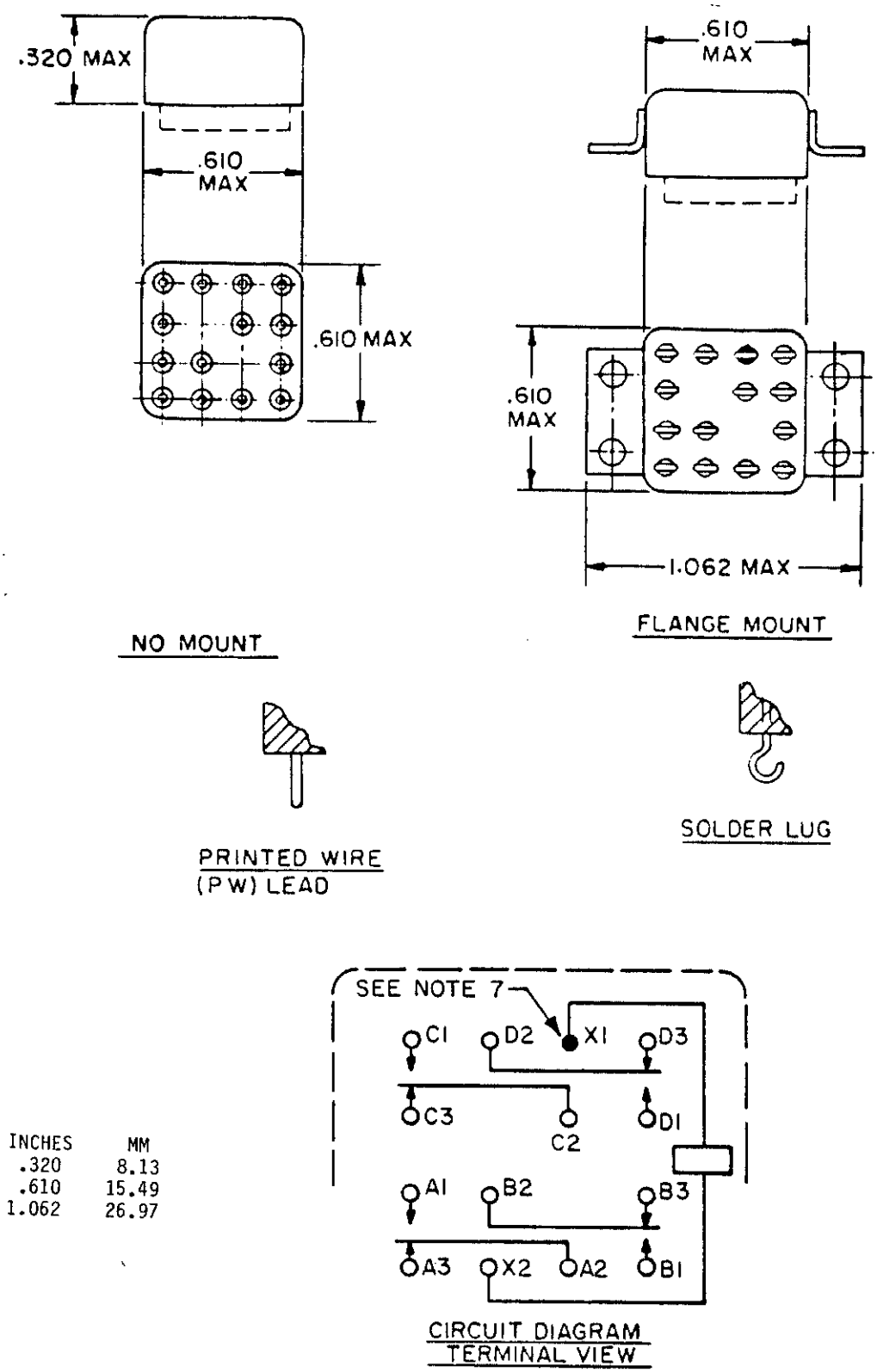

INCHES	MM
.320	8.13
.610	15.49
1.062	26.97

FIGURE 101-24. Relay, EM, ER, 4PDT, low level to 1 ampere (MIL-R-39016/14).

Downloaded from http://www.everyspec.com

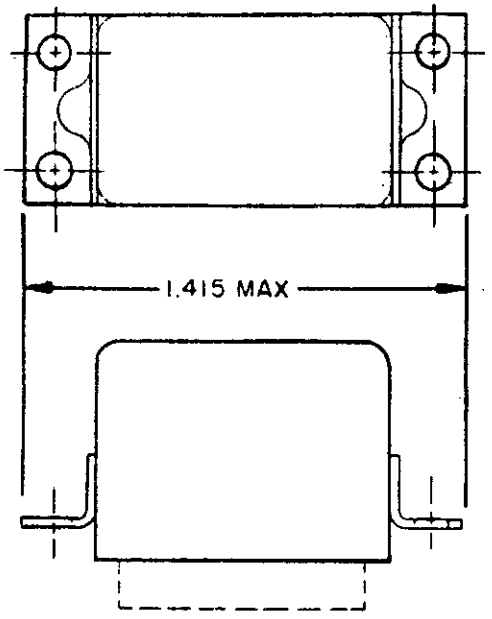

FOUR-HOLE END BRACKET

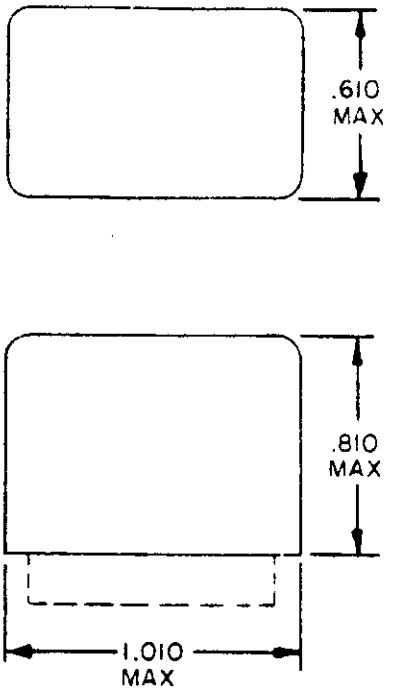

NO MOUNT

INCHES	MM
.610	15.49
.660	16.76
.810	20.57
1.010	25.65
1.415	35.94

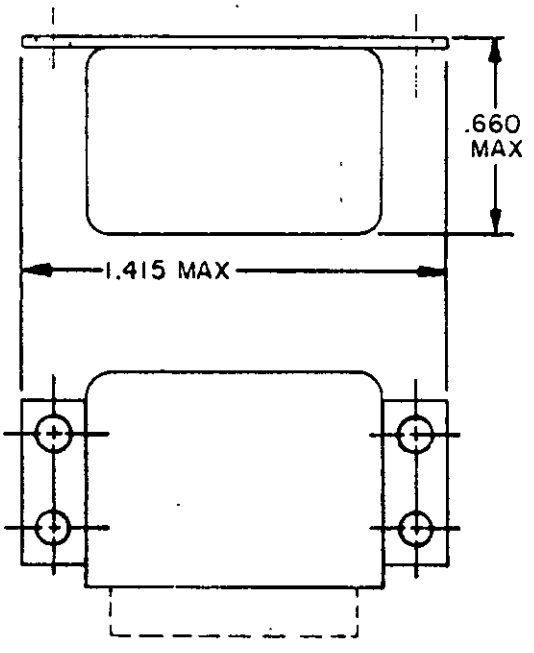

SIDE BRACKET

FIGURE 101-25. Relay, EM, ER, 4PDT, low level to 2 amperes (400 milliwatts) (MIL-R-39016/39).

Downloaded from http://www.everyspec.com

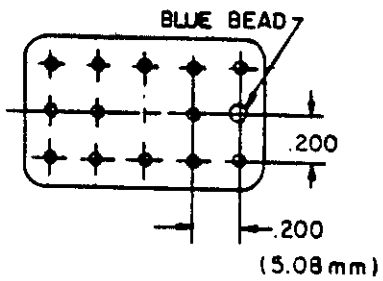

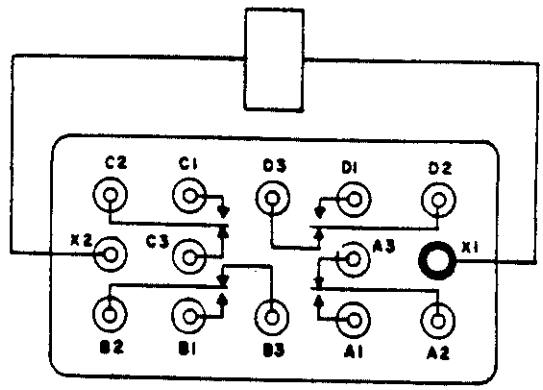

CIRCUIT DIAGRAM

TERMINALS

FIGURE 101-25. Relay, EM, ER, 4PDT, low level to 2 amperes (400 milliwatts) (MIL-R-39016/39) - Continued.

Downloaded from http://www.everyspec.com

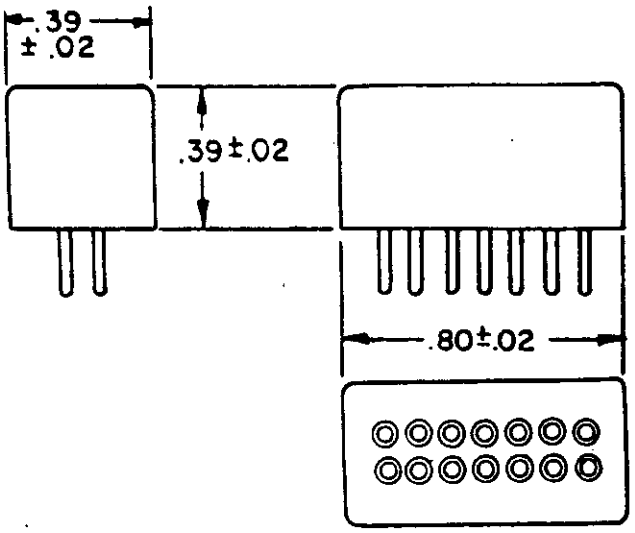

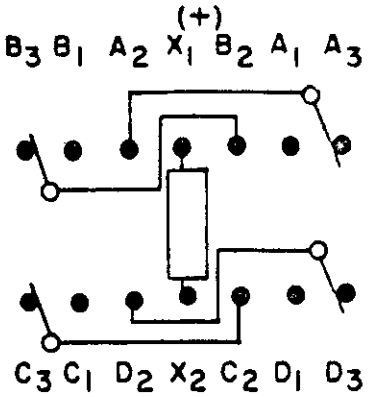

SCHEMATIC DIAGRAM
UNENERGIZED POSITION
BOTTOM VIEW

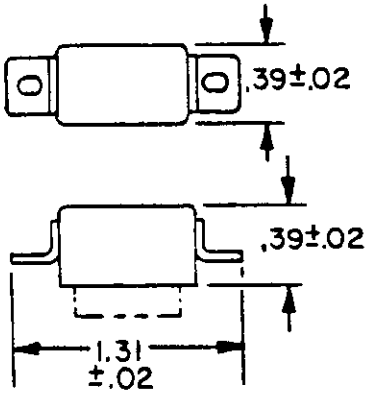

FLANGE MOUNT A

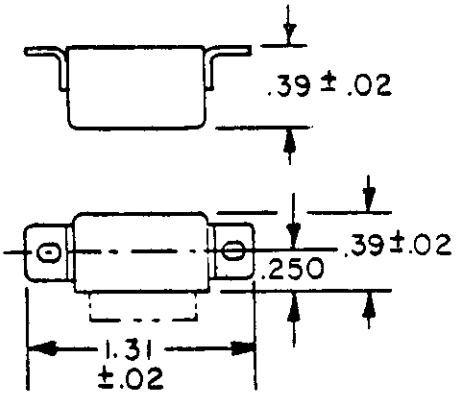

FLANGE MOUNT B

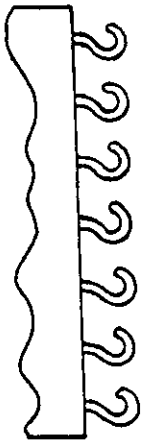

SOLDER LUG

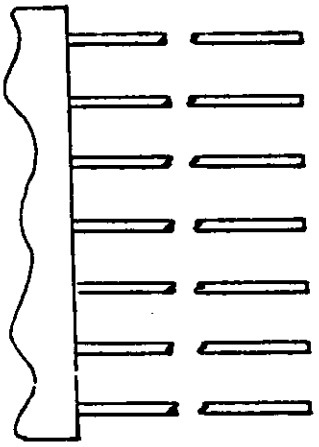

WIRE LEAD

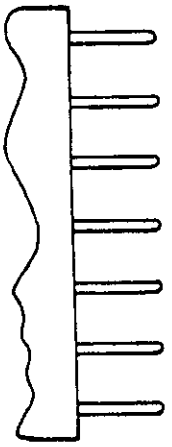

PIN (PRINTED CIRCUIT)
AND PIN SOCKET

INCHES	MM
.02	.51
.250	6.35
.39	9.91
.80	20.32
1.31	33.27

FIGURE 101-26. Relay, EM, ER, 4PDT, low level to 2 amperes (MIL-R-39016/40).

Downloaded from http://www.everyspec.com

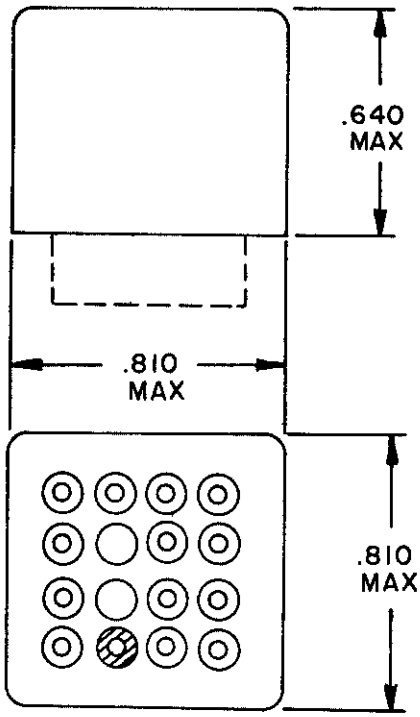

CONFIGURATION A

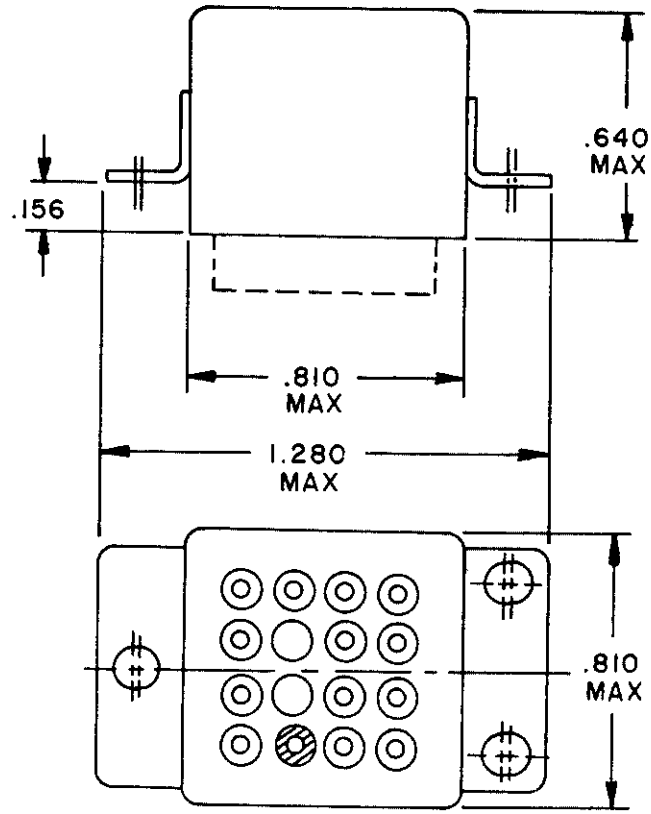

CONFIGURATION B

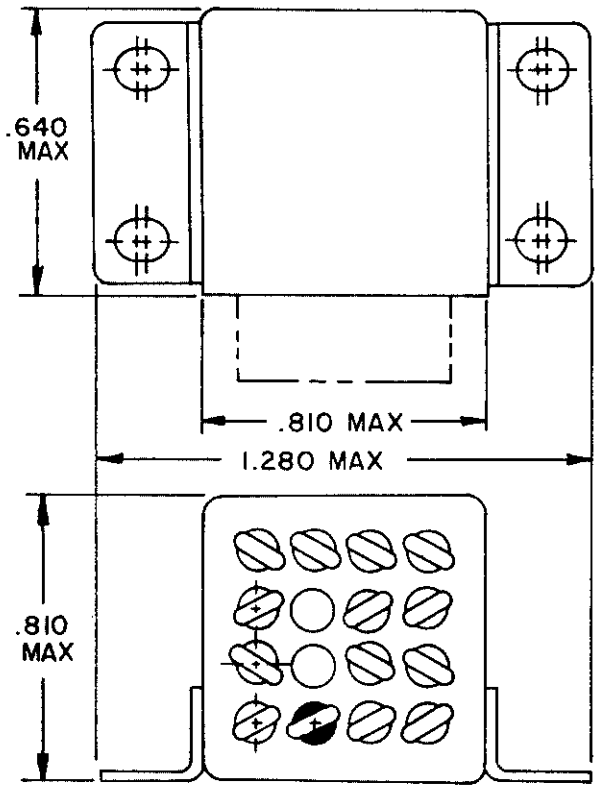

CONFIGURATION C

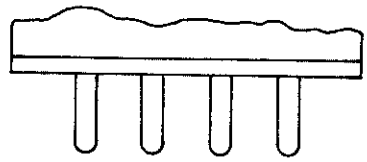

PLUG-IN TERMINAL

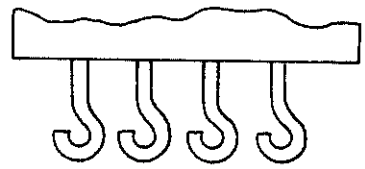

SOLDER-HOOK TERMINAL

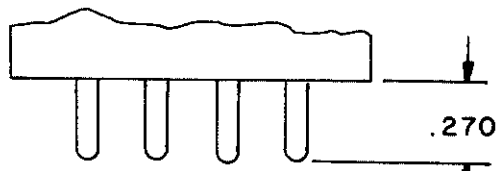

SOLDER - PIN TERMINAL

INCHES	MM
.156	3.96
.270	6.86
.640	16.26
.810	20.57
1.280	32.51

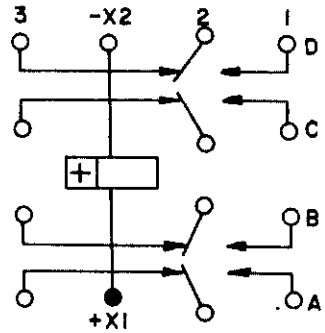

CIRCUIT DIAGRAM

FIGURE 101-27. Relay, EM, ER, 4PDT, 5 amperes (MIL-R-6106/28).

Downloaded from http://www.everyspec.com

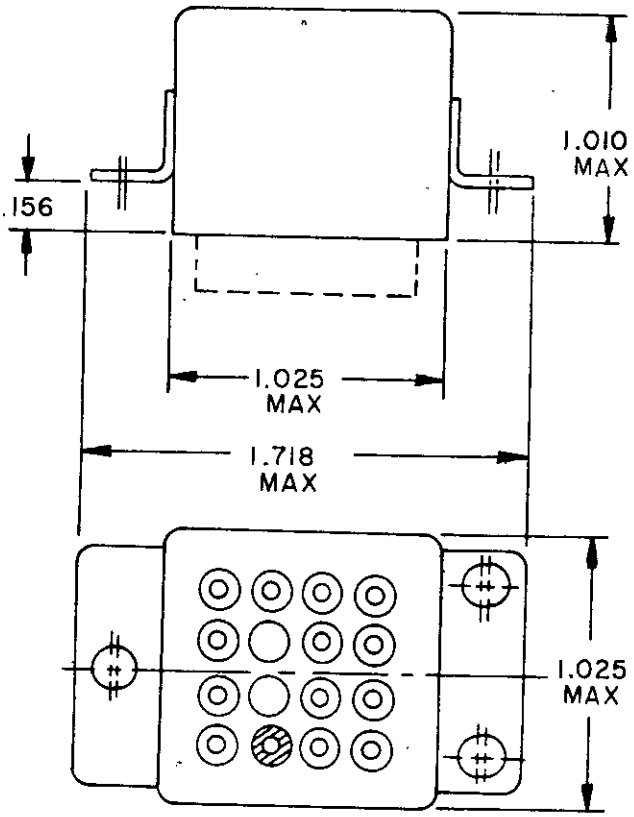

FIGURE 1

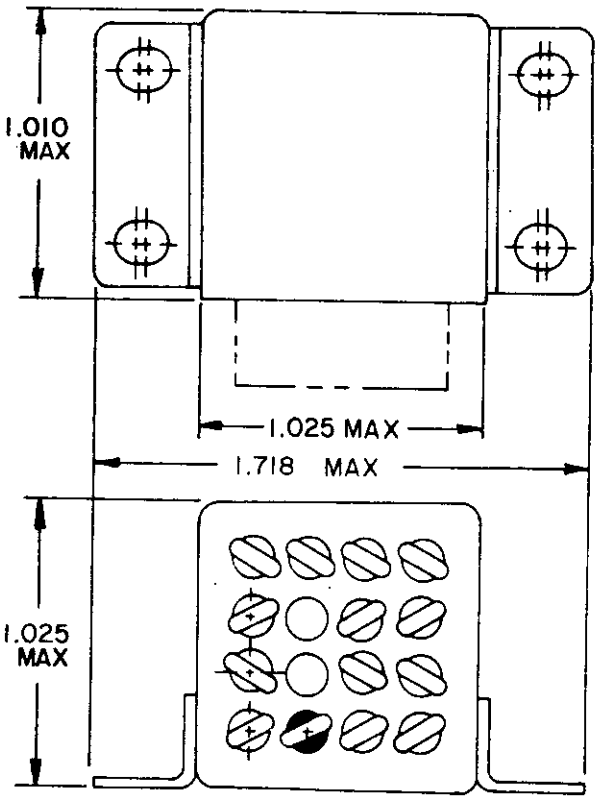

FIGURE 2

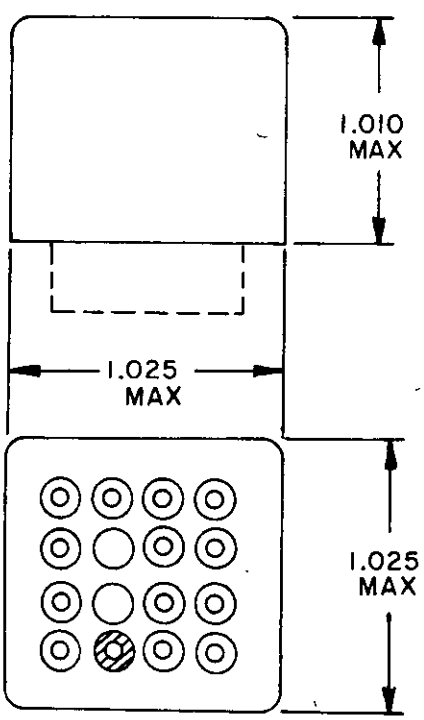

FIGURE 3

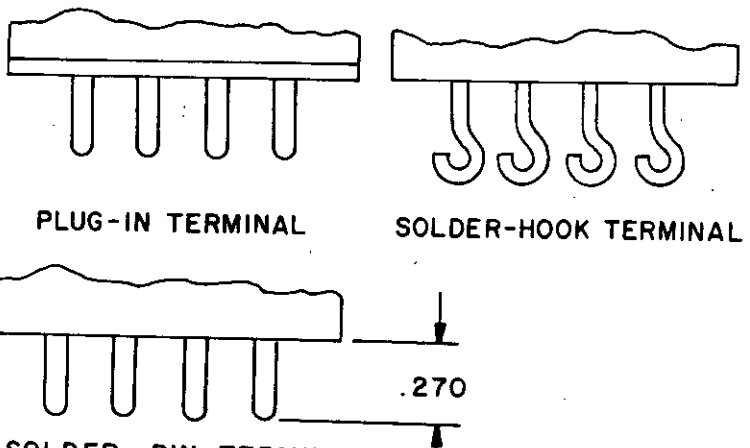

INCHES	MM
1.010	25.65
1.025	26.04
1.718	43.64

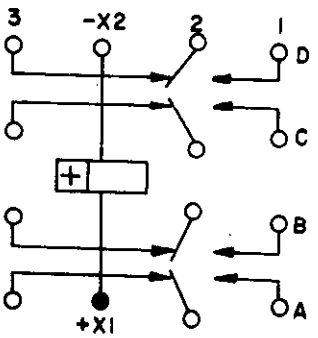

CIRCUIT DIAGRAM

FIGURE 101-28. Relay, EM, ER, 4PDT, 10 amperes (MS27400).

Downloaded from http://www.everyspec.com

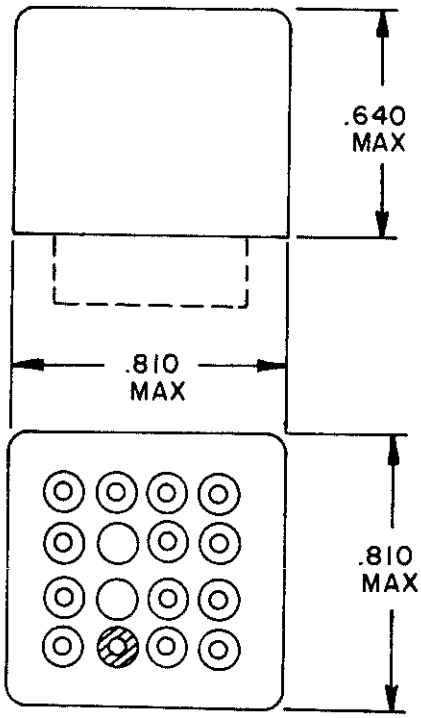

CONFIGURATION A

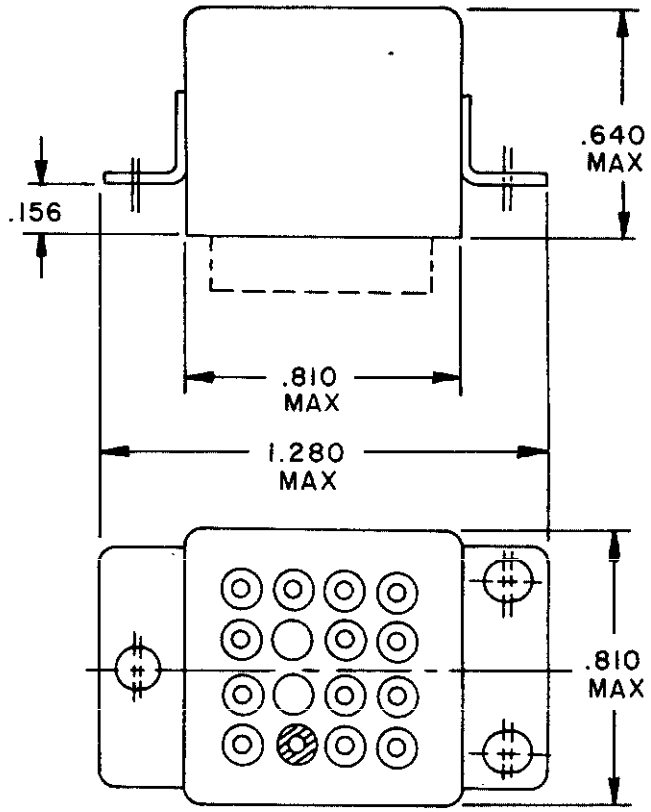

CONFIGURATION B

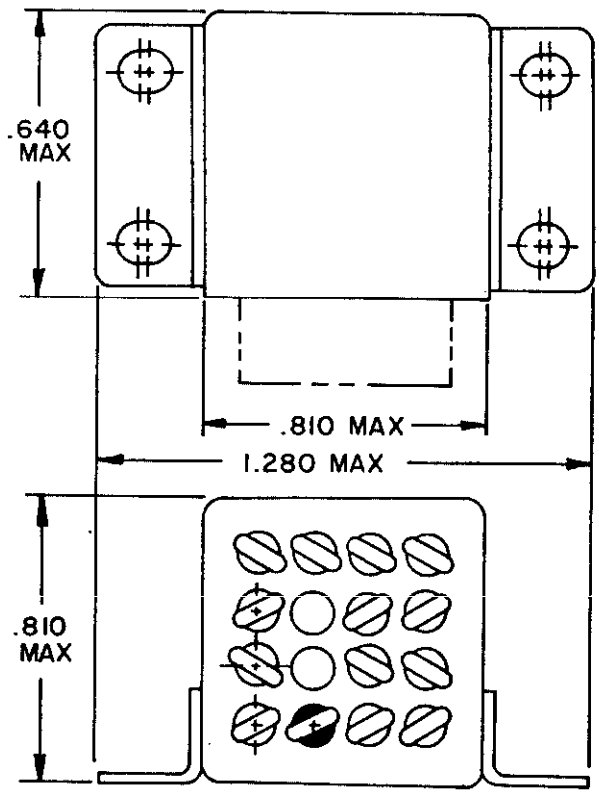

INCHES	MM
.156	3.96
.640	16.26
.810	20.57
1.280	32.51

CONFIGURATION C

FIGURE 101-29. Relay, EM, ER, 4PDT, low level to 5 amperes with coil suppression (MIL-R-6106/28).

Downloaded from http://www.everyspec.com

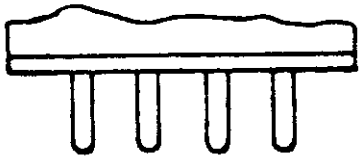

PLUG IN TERMINAL

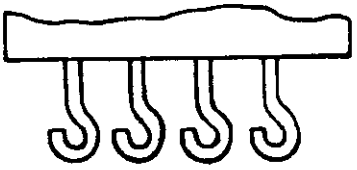

SOLDER HOOK TERMINAL

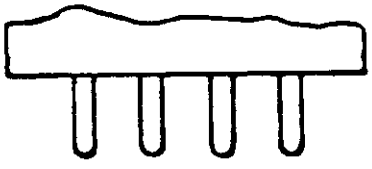

SOLDER PIN TERMINAL

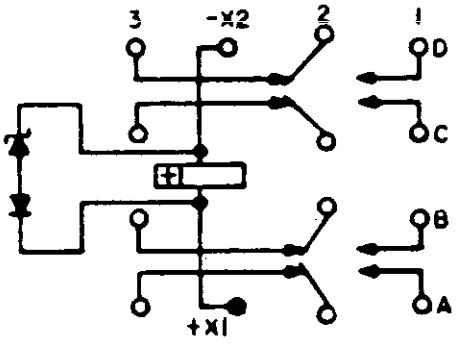

CIRCUIT DIAGRAM

FIGURE 101-29. Relay, EM, ER, 4PDT, low level to 5 amperes with coil suppression (MIL-R-6106/28) - Continued.

Downloaded from http://www.everyspec.com

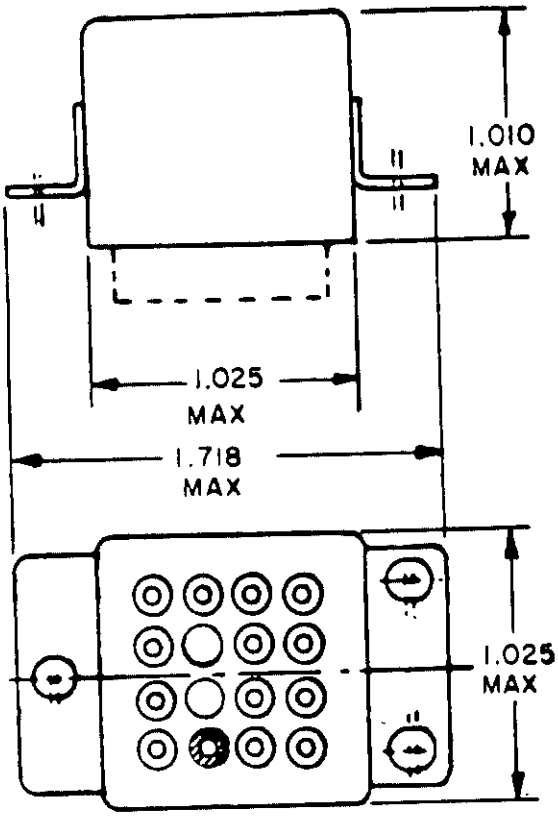

CONFIGURATION 1

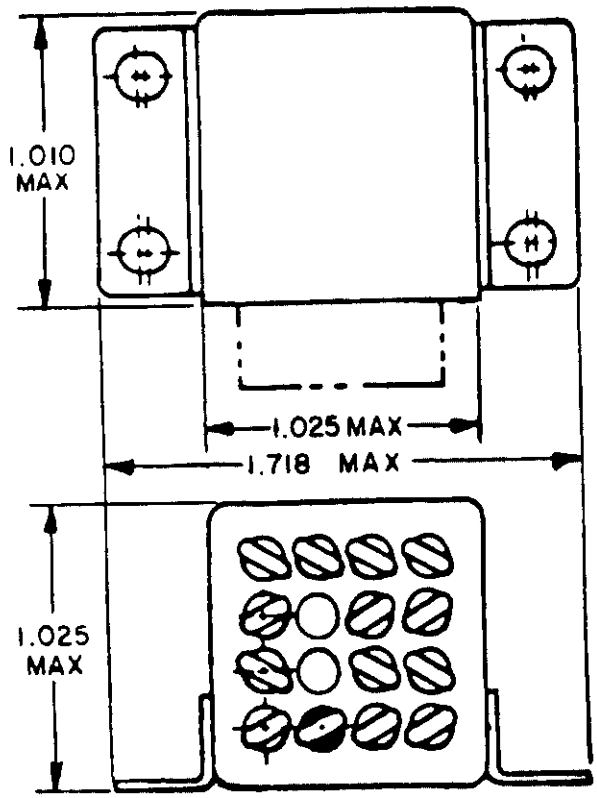

CONFIGURATION 2

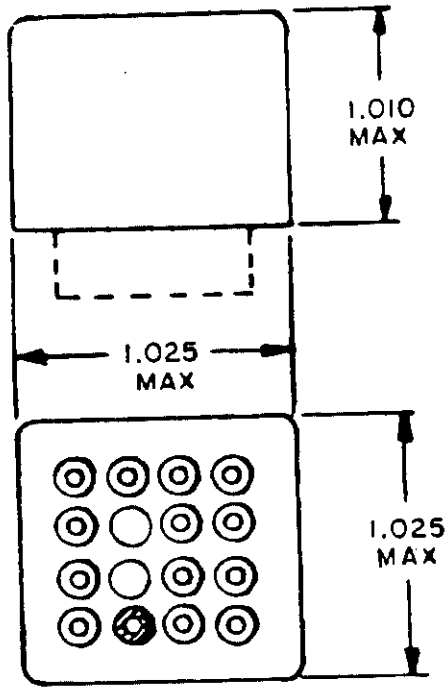

CONFIGURATION 3

INCHES	MM
1.010	25.65
1.025	26.04
1.718	43.64

FIGURE 101-30. Relay, EM, ER, 4PDT, 10 amperes with coil suppression (MS27400).

Downloaded from http://www.everyspec.com

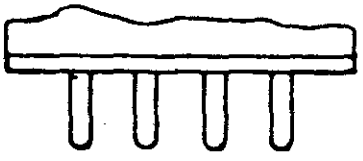

PLUG-IN TERMINAL

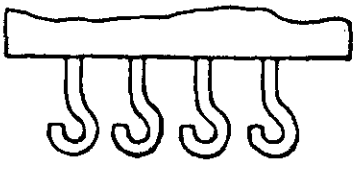

SOLDER HOOK TERMINAL

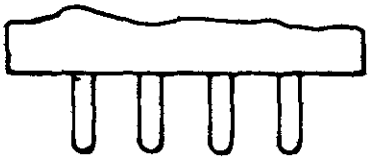

SOLDER-PIN TERMINAL

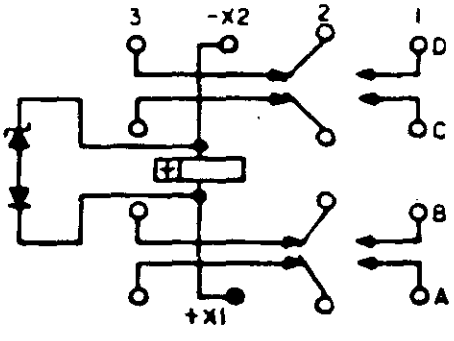

CIRCUIT DIAGRAM

FIGURE 101-30. Relay, EM, ER, 4PDT, 10 amperes with coil suppression (MS27400) - Continued.

Downloaded from http://www.everyspec.com

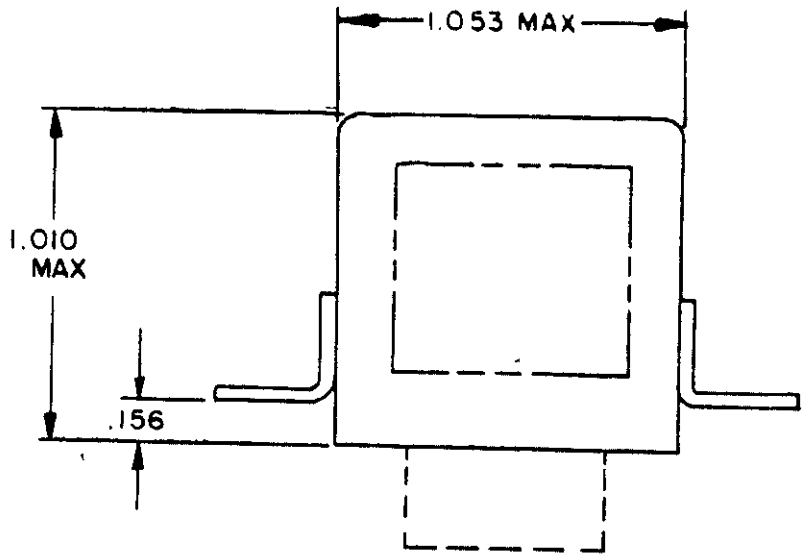

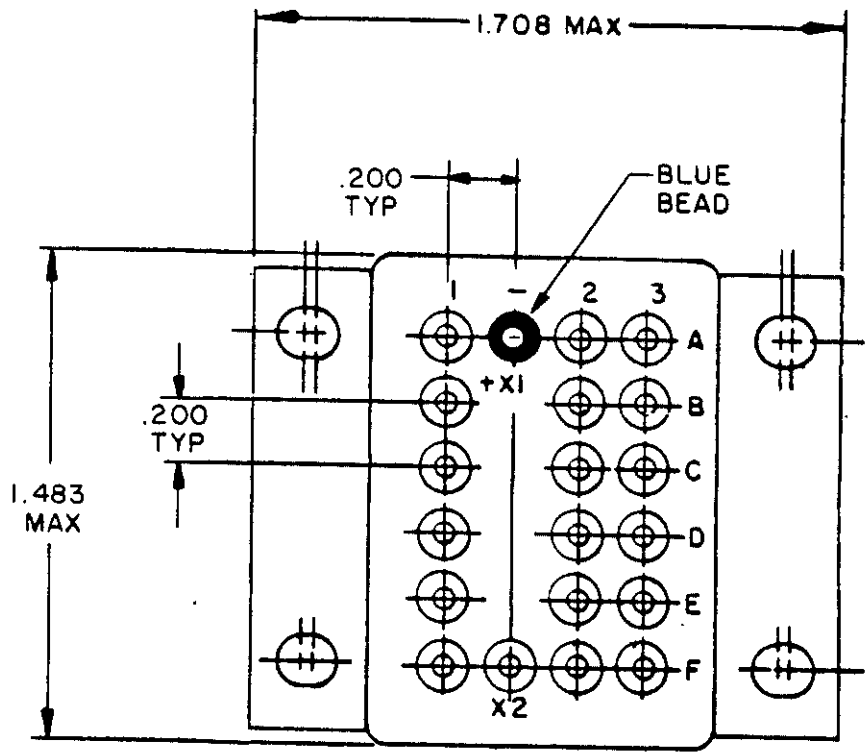

FIGURE 101-31. Relay, EM, ER, 6PDT, 10 amperes (MIL-R-6106/8).

Downloaded from http://www.everyspec.com

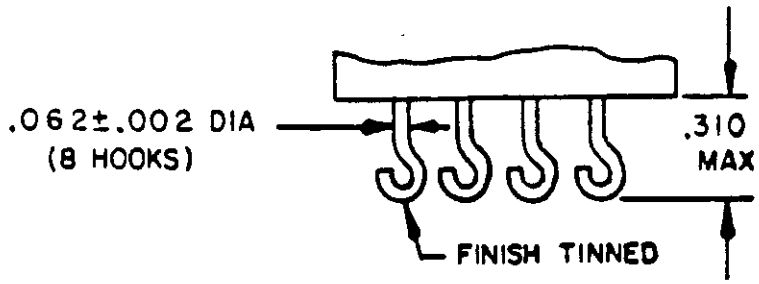

SOLDER-HOOK TERMINAL

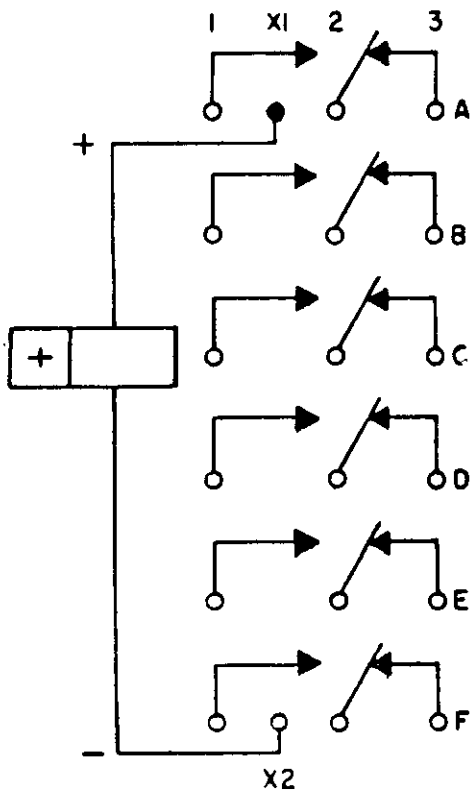

CIRCUIT DIAGRAM

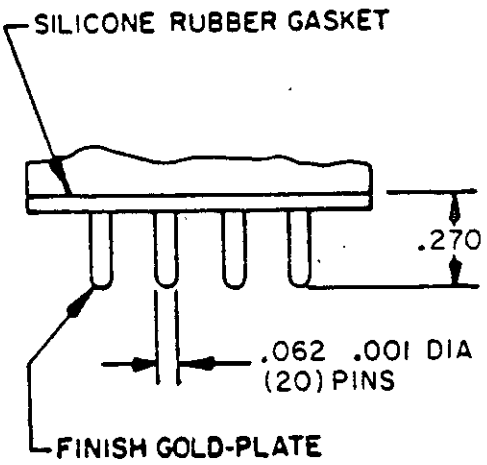

PLUG-IN TERMINAL

INCHES	MM
.001	0.03
.002	0.05
.062	1.57
.156	3.96
.200	5.08
.270	6.86
.310	7.87
1.010	25.65
1.053	26.75
1.483	37.67
1.708	43.38

FIGURE 101-31. Relay, EM, ER, 6PDT, 10 amperes (MIL-R-6106/8) - Continued.

Downloaded from http://www.everyspec.com

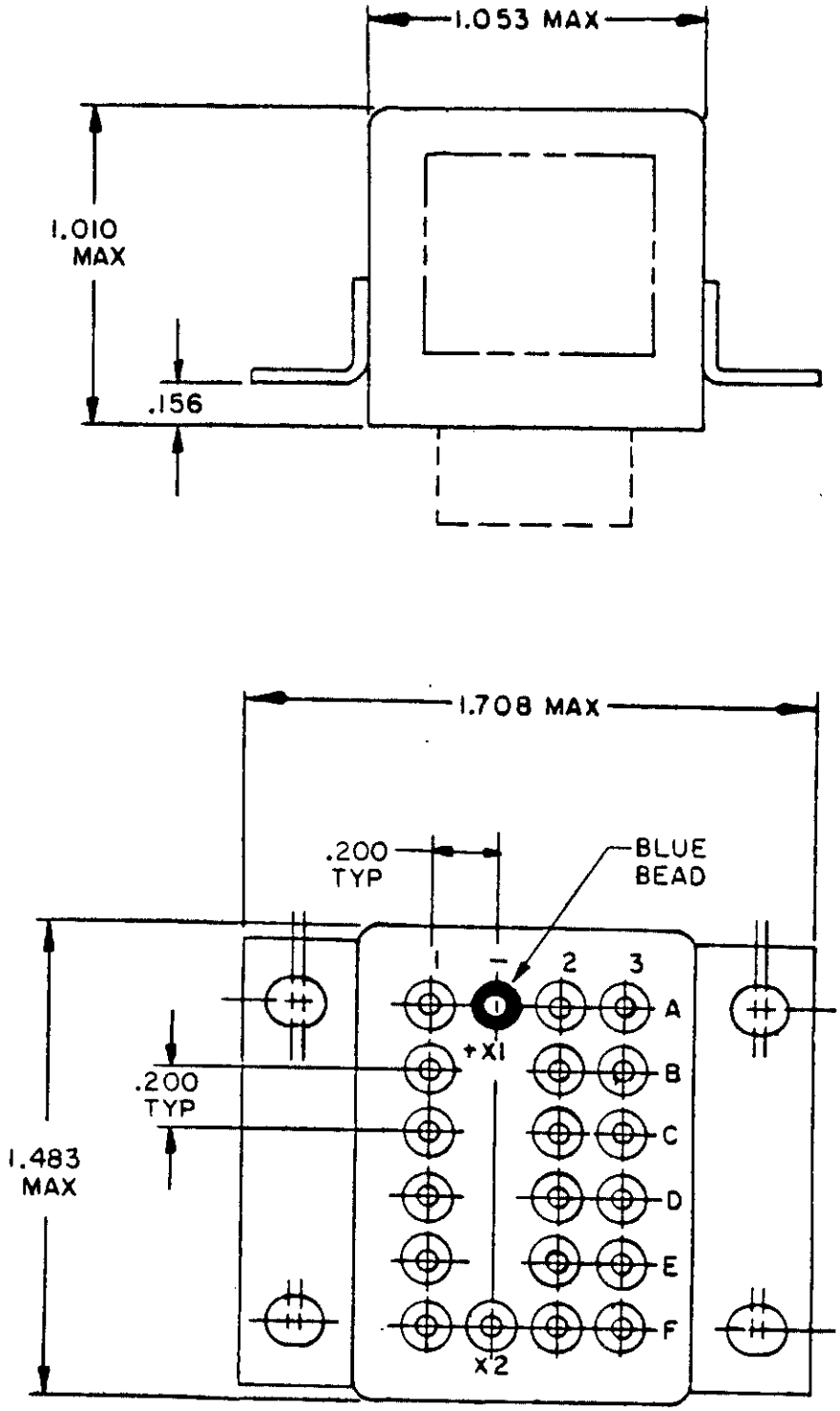

FIGURE 101-32. Relay, EM, ER, 6PDT, 10 amperes with coil suppression (MIL-R-6106/8).

Downloaded from http://www.everyspec.com

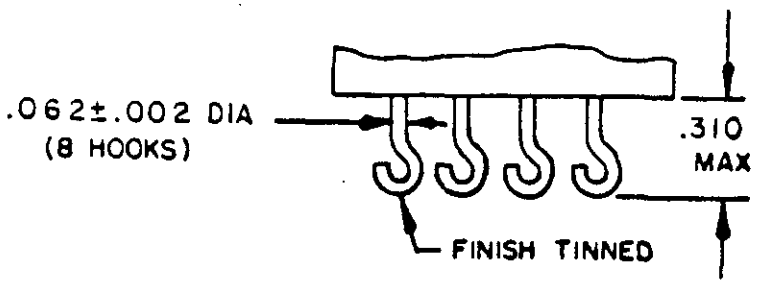

SOLDER-HOOK TERMINAL

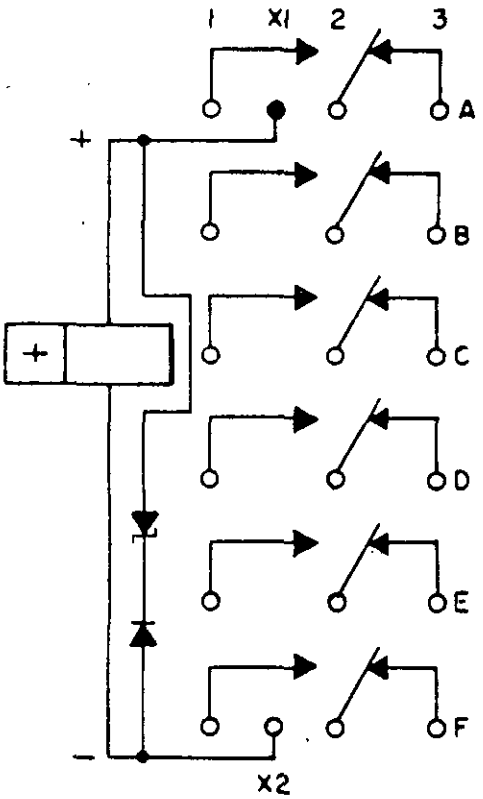

CIRCUIT DIAGRAM

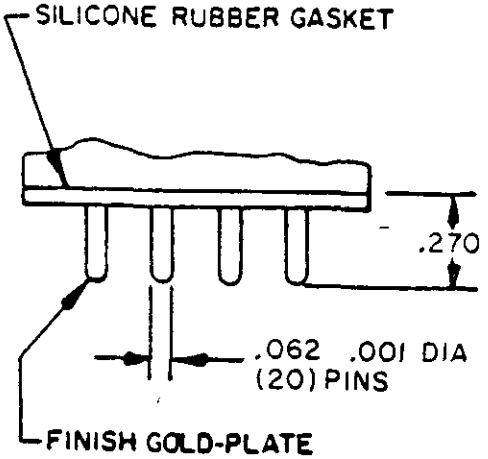

PLUG-IN TERMINAL

INCHES	MM
.001	0.03
.002	0.05
.062	1.57
.156	3.96
.200	5.08
.270	6.86
.310	7.87
1.010	25.65
1.053	26.75
1.483	37.67
1.708	43.38

FIGURE 101-32. Relay, EM, ER, 6PDT, 10 amperes with coil suppression (MIL-R-6106/8) - Continued.

Downloaded from http://www.everyspec.com

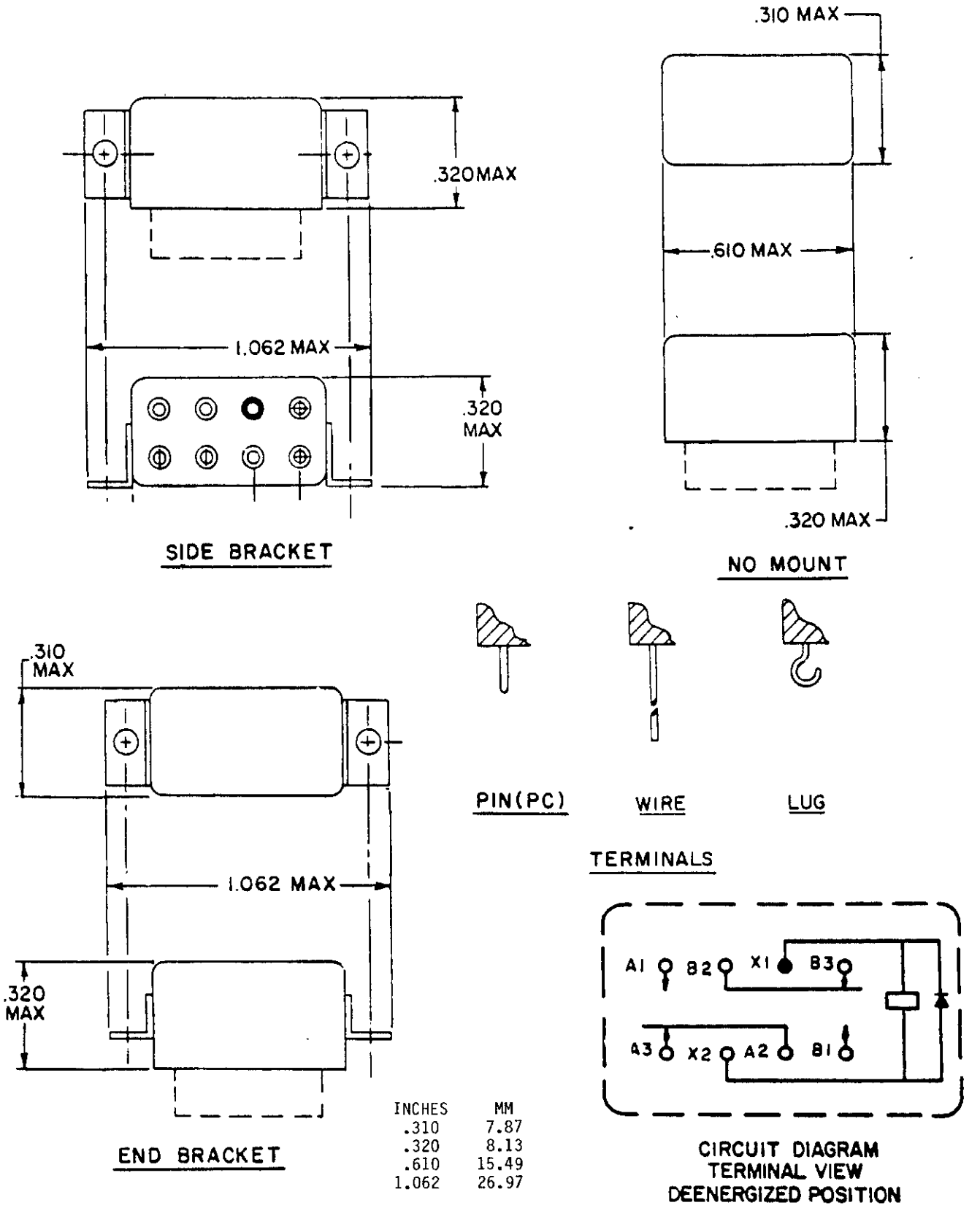

INCHES	MM
.310	7.87
.320	8.13
.610	15.49
1.062	26.97

FIGURE 101-33. Relay, EM, ER, DPDT, low level to 2 amperes with internal diode for coil transient suppression (MIL-R-39016/37).

Downloaded from http://www.everyspec.com

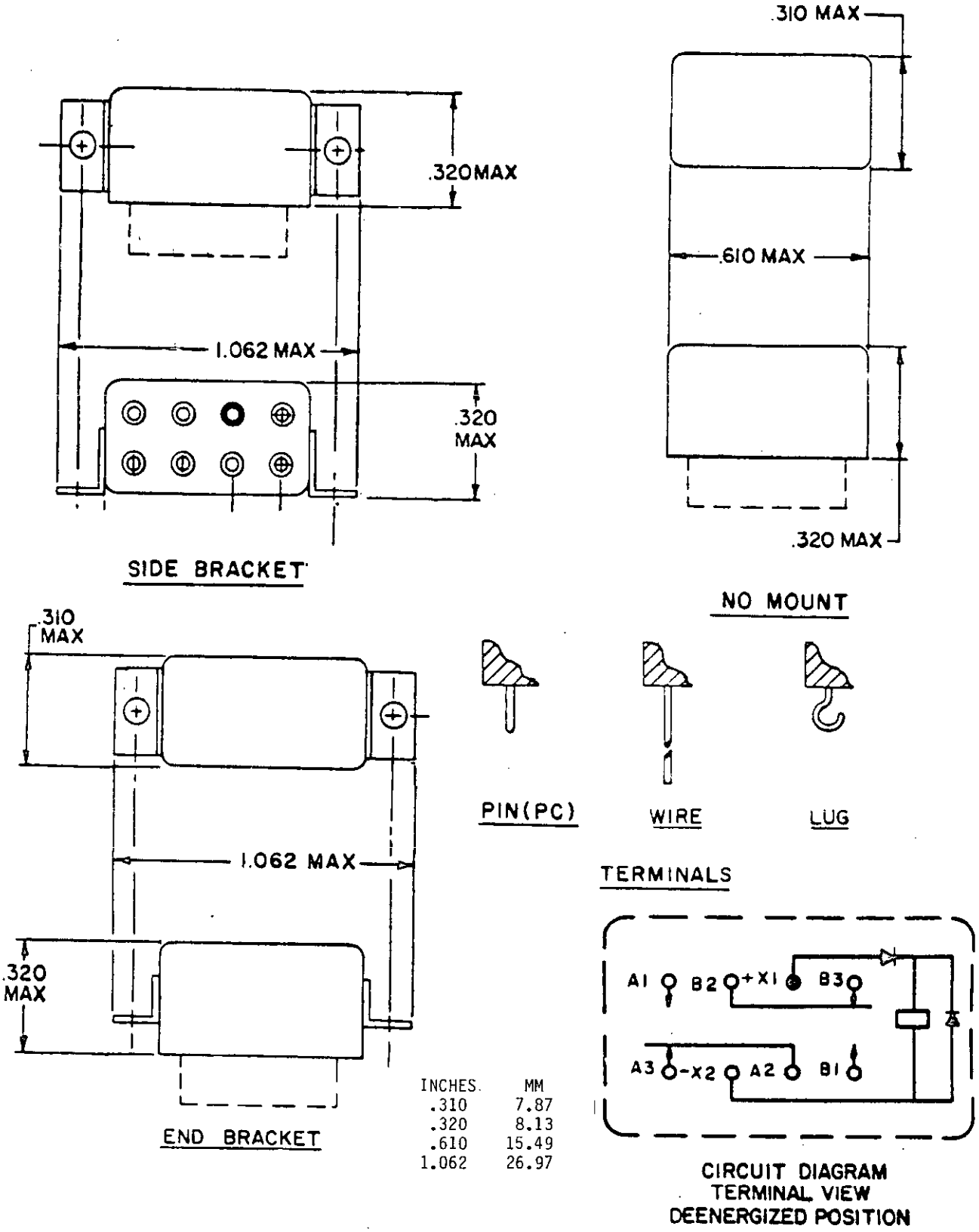

INCHES	MM
.310	7.87
.320	8.13
.610	15.49
1.062	26.97

FIGURE 101-34. Relay, EM, ER, DPDT, low level to 2 amperes with internal diodes for coil transient suppression and polarity reversal protection (MIL-R-39016/38).

Downloaded from http://www.everyspec.com

SUBSECTION 102

RELAYS, ELECTROMAGNETIC (EM), ESTABLISHED RELIABILITY (ER), AC OPERATED

(Applicable specification: MIL-R-6106)

SCOPE: This subsection covers relays with coils ac voltage rated and contacts nominally rated 5 amperes and up.

SUBSECTION 102

RELAYS, EM, ER, AC OPERATED

(Applicable specification: MIL-R-6106)

Duty cycle: Continuous
Enclosure: Hermetic sealed
Operating temperature range: G (see table I)

TABLE 102.I. Relays, EM, ER, ac operated, part numbers and characteristics.

Rated coil voltage	Part number 1/	Figure number	Shock (see table II)	Vibration (see table III)	System voltage and frequency - contact current in amperes																				Terminal style (see table IV)
					28 V dc				400 Hz								50/60 Hz								
									115 V 1-phase				115/200 V 3-phase				115 V 1-phase				115/200 V 3-phase				
					Resistive	Inductive	Motor	Lamp	Resistive	Inductive	Motor	Lamp	Resistive	Inductive	Motor	Lamp	Resistive	Inductive	Motor	Lamp	Resistive	Inductive	Motor	Lamp	
DPDT CONTACTS - 2 FORM C - (COIL 50/60/400 Hz)																									
	MS27401 Conf 1																								
115	-34Z	102-1	6	9	10	8	4	2	10	8	4	2	10	8	4	2	2.5	2.5	2	1	2.5	2.5	2	1	L
"	-36Z	"	"	"	"	"	"	"	"	"	"	"	"	"	"	"	"	"	"	"	"	"	"	"	SKP
	Conf 2																								
"	-35Z	"	"	"	"	"	"	"	"	"	"	"	"	"	"	"	"	"	"	"	"	"	"	"	L
	Conf 3																								
"	-56Z	"	"	"	"	"	"	"	"	"	"	"	"	"	"	"	"	"	"	"	"	"	"	"	L
"	-57Z	"	"	"	"	"	"	"	"	"	"	"	"	"	"	"	"	"	"	"	"	"	"	"	SP
3PDT CONTACTS - 3 FORM C - (COIL 50/60/400 Hz)																									
	MS27743 2/ Conf 1																								
115	-25	102-2	6	9	10	6	4	2	10	8	4	2	10	8	4	2	---	---	---	---	---	---	---	---	L
	Conf 3																								
"	-26	"	"	"	"	"	"	"	"	"	"	"	"	"	"	"	"	"	"	"	"	"	"	"	L
	Conf 2																								
"	-27	"	"	"	"	"	"	"	"	"	"	"	"	"	"	"	"	"	"	"	"	"	"	"	SKP

See footnote at end of table.

Downloaded from http://www.everyspec.com

TABLE 102.I. Relays, EM, ER, ac operated, part numbers and characteristics - Continued.

Rated coil voltage	Part number 1/	Figure number	Shock (see table II)	Vibration (see table III)	System voltage and frequency - contact current in amperes																				Terminal style (see table IV)
					28 V dc				400 Hz								50/60 Hz								
									115 V 1-phase				115/200 V 3-phase				115 V 1-phase				115/200 V 3-phase				
					Resis-tive	Induc-tive	Motor	Lamp	Resis-tive	Induc-tive	Motor	Lamp	Resis-tive	Induc-tive	Motor	Lamp	Resis-tive	Induc-tive	Motor	Lamp	Resis-tive	Induc-tive	Motor	Lamp	
4PDT CONTACTS - 4 FORM C - (COIL 50/60/400 Hz)																									
	MS27400 Conf 1																								
115	-32Z	102-3	6	9	10	8	4	2	10	8	4	2	10	8	4	2	2.5	2.5	2	1	2.5	2.5	2	1	L
"	-34Z	"	"	"	"	"	"	"	"	"	"	"	"	"	"	"	"	"	"	"	"	"	"	"	SKP
	Conf 2																								
"	-33Z	"	"	"	"	"	"	"	"	"	"	"	"	"	"	"	"	"	"	"	"	"	"	"	L
	Conf 3																								
"	-50Z	"	"	"	"	"	"	"	"	"	"	"	"	"	"	"	"	"	"	"	"	"	"	"	L
"	-51Z	"	"	"	"	"	"	"	"	"	"	"	"	"	"	"	"	"	"	"	"	"	"	"	SP
6PDT CONTACTS - 6 FORM C - (COIL 400 Hz only)																									
	M6106/8																								
115	-007 2/	102-4	1	6	10	8	4	2	10	8	4	2	10	8	4	2	---	---	---	---	---	---	---	---	L
115	-008 2/	102-4	1	6	10	8	4	2	10	8	4	2	10	8	4	2	---	---	---	---	---	---	---	---	SKP

1/ The symbol is used to indicate that a failure rate symbol is required. See table V and the latest qualified parts list (QPL) of the specification being used.

2/ These relays are tested to the group A ER requirements only and additional life testing is not required. For group A inspection, operational reliability shall be performed at the alternate low level run in.

Downloaded from http://www.everyspec.com

Downloaded from http://www.everyspec.com

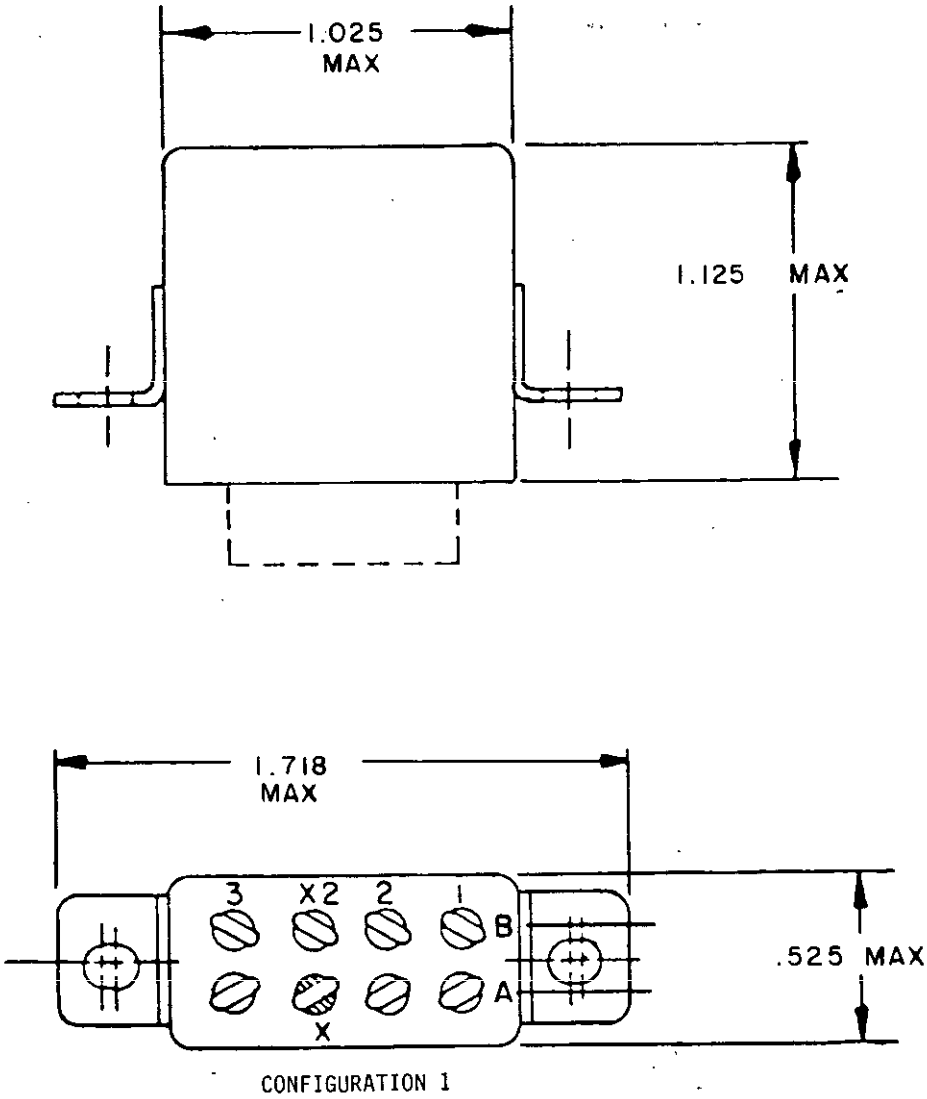

INCHES	MM
.525	13.34
1.025	26.04
1.125	28.58
1.718	43.64

FIGURE 102-1. Relay, EM, ER, DPDT, 10 amperes (MS27401).

Downloaded from http://www.everyspec.com

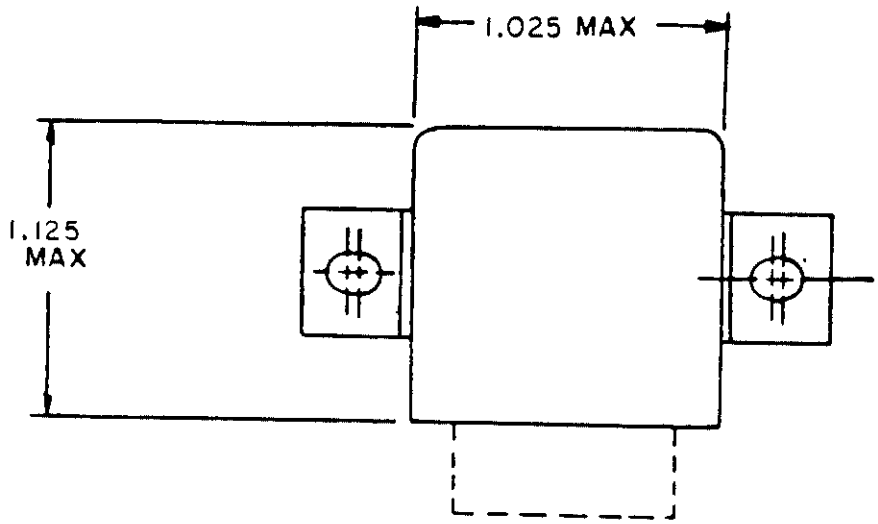

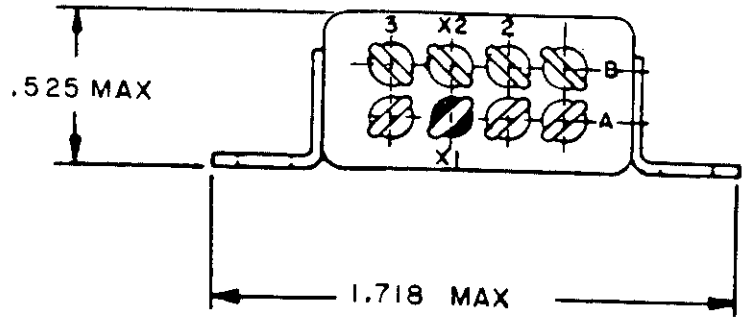

CONFIGURATION 2

FIGURE 102-1. Relay, EM, ER, DPDT, 10 amperes (MS27401) - Continued.

Downloaded from http://www.everyspec.com

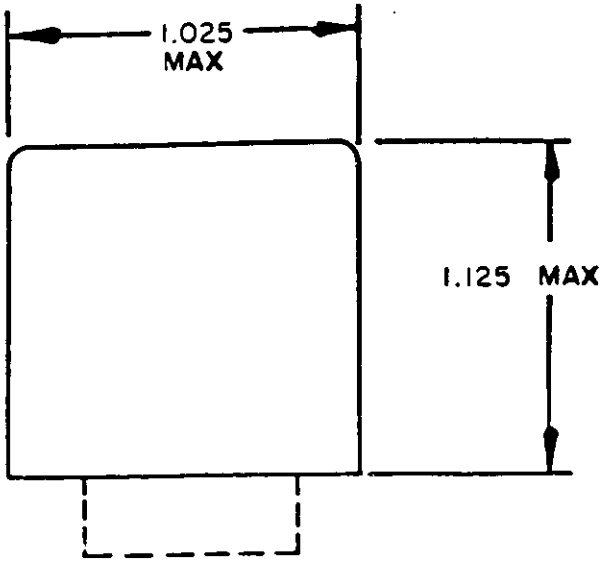

CONFIGURATION 3

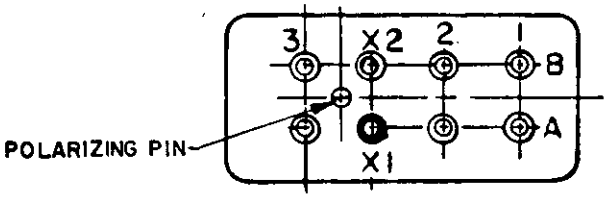

TERMINAL LAYOUT FOR ALL
STRAIGHT PIN 50/60/400 Hz RELAYS

DETAIL POLARIZING PIN FOR
50/60/400 Hz RELAYS

FIGURE 102-1. Relay, EM, ER, DPDT, 10 amperes (MS27401) - Continued.

Downloaded from http://www.everyspec.com

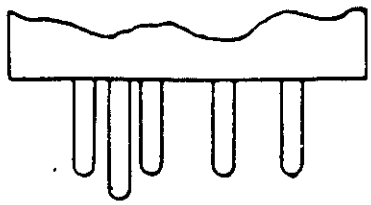

SOLDER PIN

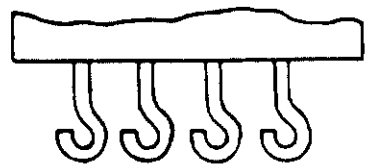

SOLDER-HOOK

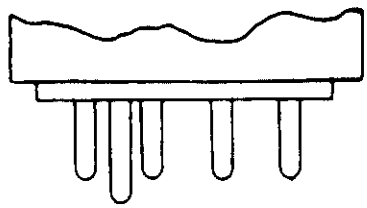

SOCKET PIN

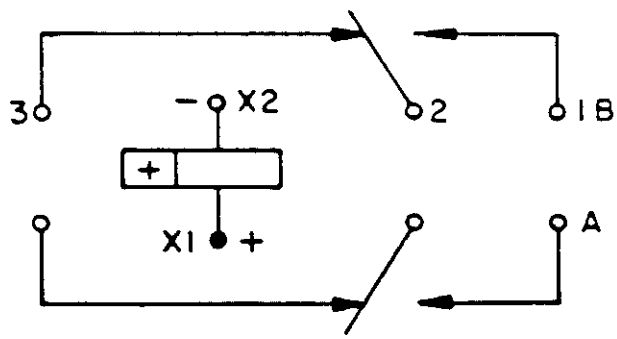

CIRCUIT DIAGRAM

FIGURE 102-1. Relay, EM, ER, DPDT, 10 amperes (MS27401) - Continued.

Downloaded from http://www.everyspec.com

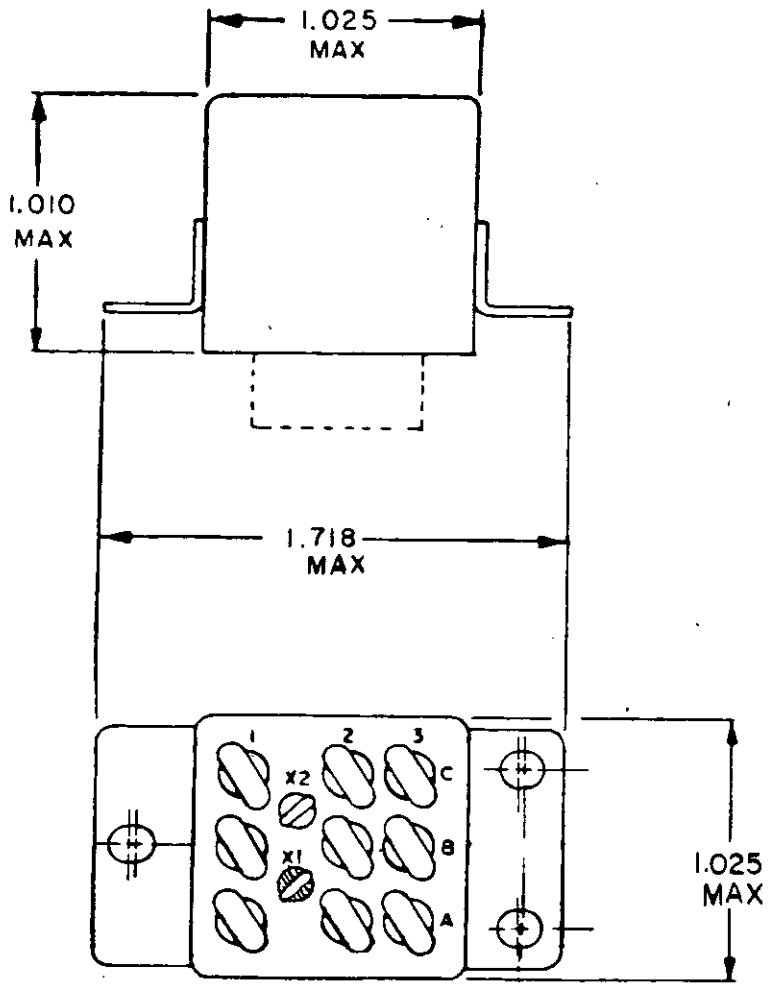

CONFIGURATION 1

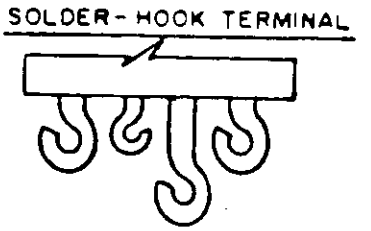

FIGURE 102-2. Relay, EM, ER, 3PDT, 25 amperes (MS27743).

Downloaded from http://www.everyspec.com

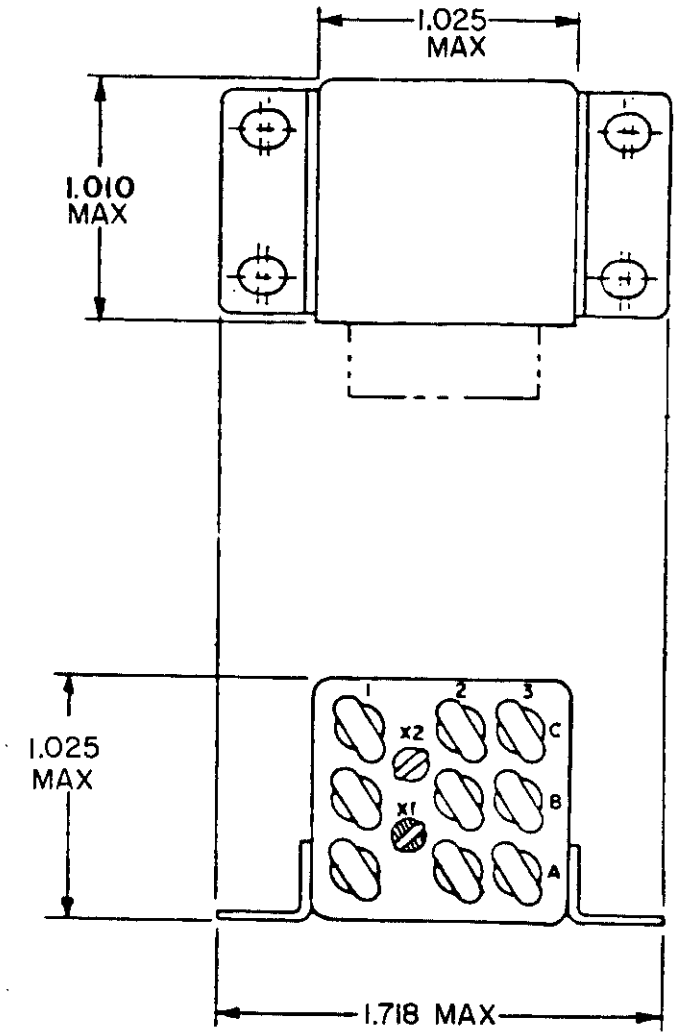

CONFIGURATION 3

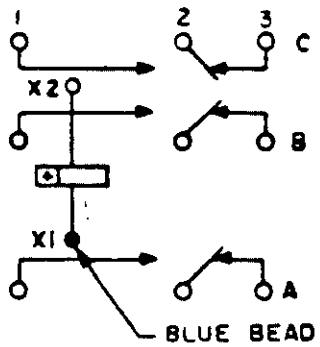

CIRCUIT DIAGRAM

INCHES	MM
1.010	25.65
1.025	26.04
1.718	43.64

FIGURE 102-2. Relay, EM, ER, 3PDT, 25 amperes (MS27743) - Continued.

Downloaded from http://www.everyspec.com

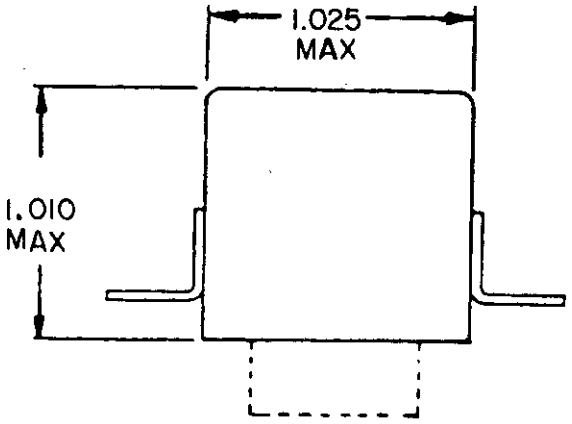

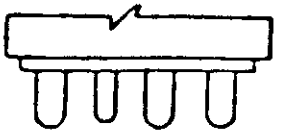

SOCKET PIN

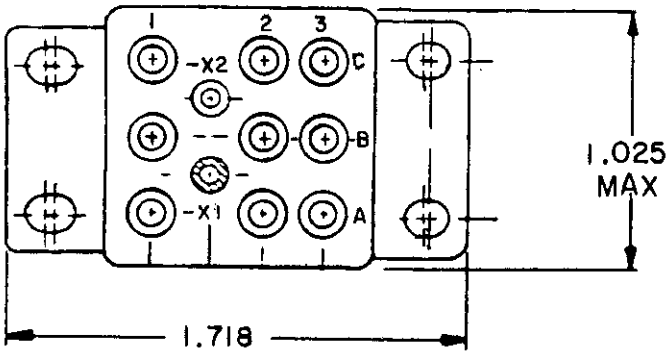

TERMINAL LAYOUT FOR ALL AC SOCKET PINS (GOLD-PLATED)

FIGURE 102-2. Relay, EM, ER, 3PDT, 25 amperes (MS27743) - Continued.

Downloaded from http://www.everyspec.com

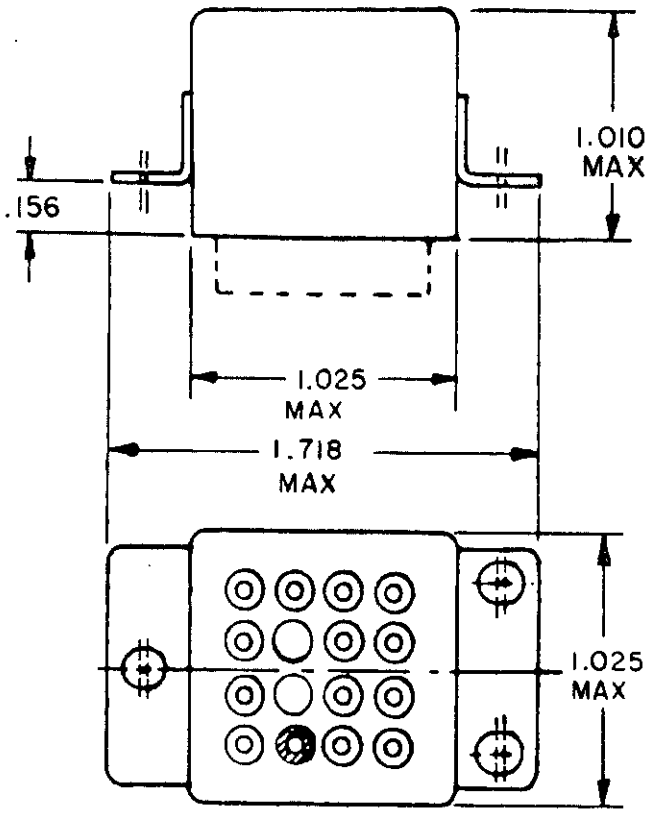

CONFIGURATION 1

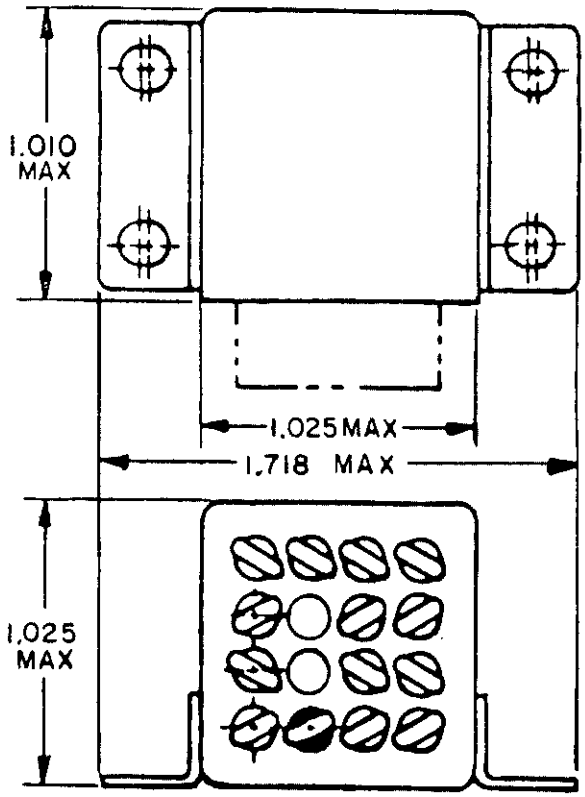

CONFIGURATION 2

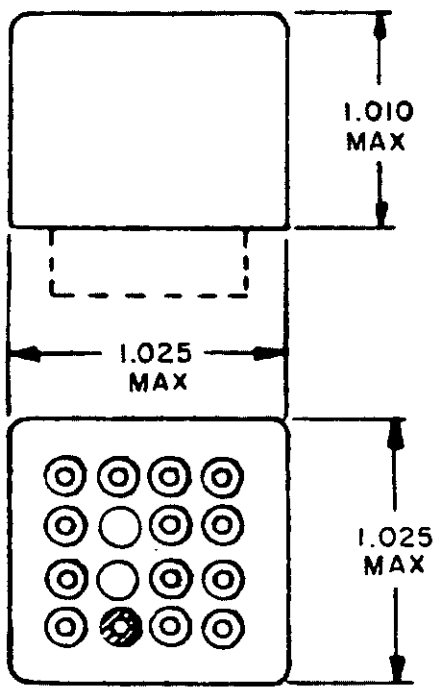

CONFIGURATION 3

INCHES	MM
1.010	25.65
1.025	26.04
1.718	43.64

FIGURE 102-3. Relay, EM, ER, 4PDT, 10 amperes (MS27400).

Downloaded from http://www.everyspec.com

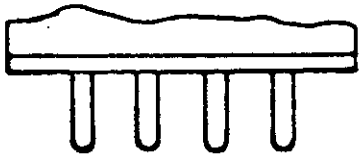

PLUG-IN TERMINAL

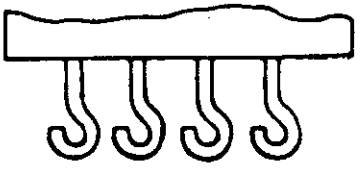

SOLDER-HOOK TERMINAL

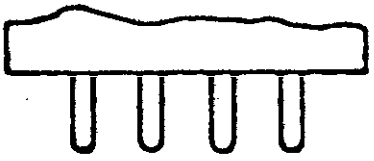

SOLDER-PIN TERMINAL

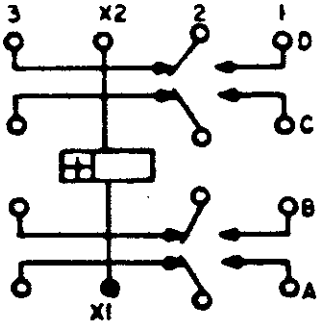

CIRCUIT DIAGRAM

FIGURE 102-3. Relay, EM, ER, 4PDT, 10 amperes (MS27400) - Continued.

Downloaded from http://www.everyspec.com

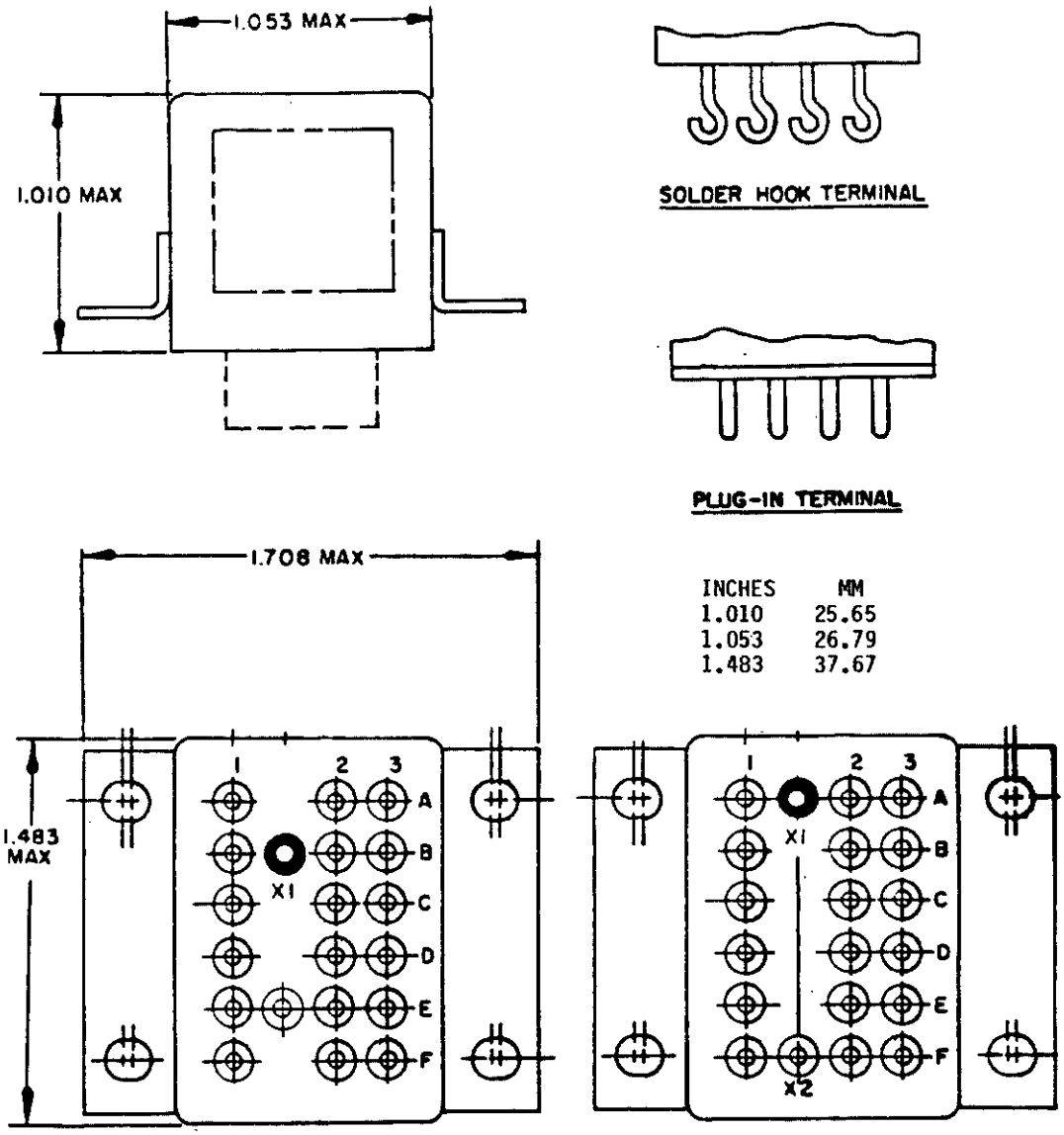

M6106/8-008
(PLUG-IN)

M6106/8-007
(SOLDER HOOK)

FIGURE 102-4. Relay, EM, ER, 6PDT, 10 amperes (MIL-R-6106/8).

Downloaded from http://www.everyspec.com

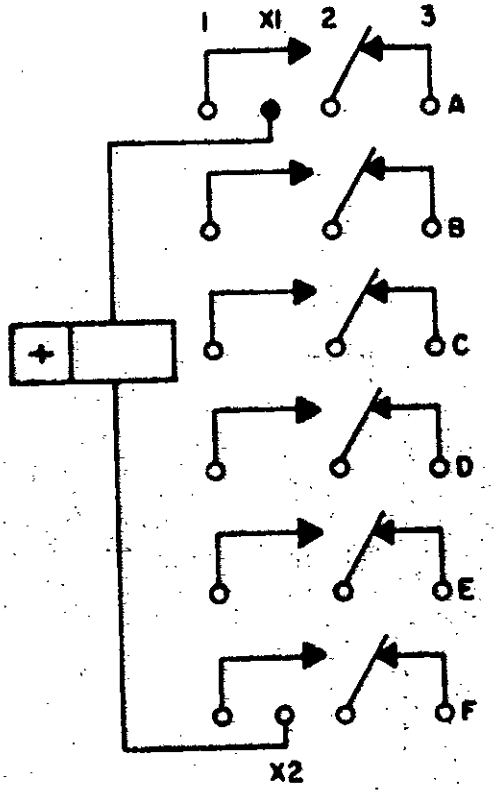

CIRCUIT DIAGRAM

FIGURE 102-4. Relay, EM, ER, 6PDT, 10 amperes (MIL-R-6106/8) - Continued.

Downloaded from http://www.everyspec.com

SUBSECTION 103

RELAYS, ELECTROMAGNETIC (EM), ESTABLISHED RELIABILITY (ER), SENSITIVE, DC OPERATING

(Applicable specification: MIL-R-39016)

SCOPE: This subsection covers relays designed to operate with dc input coil power of 100 milliwatts or less, as applicable.

SECTION 103 1/

RELAYS, ELECTROMAGNETIC (EM), ESTABLISHED RELIABILITY (ER), SENSITIVE, DC OPERATED

(Applicable specification: MIL-R-39016)

Duty cycle: Continuous
Altitude: 70,000 feet
Enclosure: Hermetically sealed
Operating temperature range: B (see table I)

TABLE 103.I 1/ Relays, EM, ER, sensitive, dc operated, part numbers and characteristics.

Rated coil voltage	Part number 2/	Figure number	Shock (see table II)	Vibration (see table III)	System voltage and frequency-contact current in amperes: 28 V dc, Resistive	28 V dc, Inductive	28 V dc, Lamp	400 Hz 115 V 1-phase, Resistive	400 Hz 115 V 1-phase, Inductive	400 Hz 115 V 1-phase, Lamp	60 Hz 115 V 1-phase, Resistive	60 Hz 115 V 1-phase, Inductive	60 Hz 115 V 1-phase, Lamp	Terminal style (see table IV)
SPDT CONTACTS - 1 FORM C														
	M39016/103/													
5.0	-018Z	103-1	9	9	1.0	0.2	0.10	0.1	---	---	0.1	---	---	.187
5.0	-033Z													.800
6.0	-030Z	"	"	"	"	"	"	"	"	"	"	"	"	.187
6.0	-034Z	"	"	"	"	"	"	"	"	"	"	"	"	.800
9.0	-030Z	"	"	"	"	"	"	"	"	"	"	"	"	.187
9.0	-039Z	"	"	"	"	"	"	"	"	"	"	"	"	.800
12.0	-028Z	"	"	"	"	"	"	"	"	"	"	"	"	.187
12.0	-038Z	"	"	"	"	"	"	"	"	"	"	"	"	.800
18.0	-032Z	"	"	"	"	"	"	"	"	"	"	"	"	.187
18.0	-040Z	"	"	"	"	"	"	"	"	"	"	"	"	.800
26.5	-024Z	"	"	"	"	"	"	"	"	"	"	"	"	.187
26.5	-036Z	"	"	"	"	"	"	"	"	"	"	"	"	.800
32.0	-028Z	"	"	"	"	"	"	"	"	"	"	"	"	.187
32.0	-037Z	"	"	"	"	"	"	"	"	"	"	"	"	.800
40.0	-028Z	"	"	"	"	"	"	"	"	"	"	"	"	.187
40.0	-039Z	"	"	"	"	"	"	"	"	"	"	"	"	.800

See footnotes at end of table.

Downloaded from http://www.everyspec.com

TABLE 103.I 1/ Relays, EM, ER, sensitive, dc operated, part numbers and characteristics - Continued.

Rated coil voltage	Part number 2/	Figure number	Shock (see table II)	Vibration (see table III)	System voltage and frequency-contact current in amperes: 28 V dc Resistive	28 V dc Inductive	28 V dc Lamp	400 Hz 115 V 1-phase Resistive	400 Hz 115 V 1-phase Inductive	400 Hz 115 V 1-phase Lamp	60 Hz 115 V 1-phase Resistive	60 Hz 115 V 1-phase Inductive	60 Hz 115 V 1-phase Lamp	Terminal style (see table IV)
SPDT CONTACTS - 1 FORM C - WITH DIODE COIL TRANSIENT SUPPRESSION														
	M39016/25 3/													
5.0	-025Z	103-2	2	9	1.0	0.20	0.10	0.1	---	---	0.1	---	---	.187
5.0	-033Z	"	"	"	"	"	"	"	"	"	"	"	"	.500
6.0	-026Z	"	"	"	"	"	"	"	"	"	"	"	"	.187
6.0	-034Z	"	"	"	"	"	"	"	"	"	"	"	"	.500
9.0	-031Z	"	"	"	"	"	"	"	"	"	"	"	"	.187
9.0	-039Z	"	"	"	"	"	"	"	"	"	"	"	"	.500
12.0	-027Z	"	"	"	"	"	"	"	"	"	"	"	"	.187
12.0	-035Z	"	"	"	"	"	"	"	"	"	"	"	"	.500
18.0	-032Z	"	"	"	"	"	"	"	"	"	"	"	"	.187
18.0	-040Z	"	"	"	"	"	"	"	"	"	"	"	"	.500
26.5	-028Z	"	"	"	"	"	"	"	"	"	"	"	"	.187
26.5	-036Z	"	"	"	"	"	"	"	"	"	"	"	"	.500
32.0	-029Z	"	"	"	"	"	"	"	"	"	"	"	"	.187
32.0	-037Z	"	"	"	"	"	"	"	"	"	"	"	"	.500
40.0	-030Z	"	"	"	"	"	"	"	"	"	"	"	"	.187
40.0	-038Z	"	"	"	"	"	"	"	"	"	"	"	"	.500
SPDT CONTACTS - 1 FORM C - WITH DIODE COIL TRANSIENT SUPPRESSION AND POLARITY REVERSAL PROTECTION														
	M39016/26 3/													
5.0	-025Z	103-3	2	9	1.0	0.20	0.10	0.1	---	---	0.1	---	---	.187
5.0	-033Z	103-3	2	9	1.0	0.20	0.10	---	---	---	---	---	---	.500

See footnotes at end of table.

Downloaded from http://www.everyspec.com

Rated coil voltage	Part number 2/	Figure number	Shock (see table II)	Vibration (see table III)	28 V dc Resistive	28 V dc Inductive	28 V dc Lamp	400 Hz 115 V 1-phase Resistive	400 Hz 115 V 1-phase Inductive	400 Hz 115 V 1-phase Lamp	60 Hz 115 V 1-phase Resistive	60 Hz 115 V 1-phase Inductive	60 Hz 115 V 1-phase Lamp	Terminal style (see table IV)
SPDT CONTACTS - 1 FORM C - WITH DIODE COIL TRANSIENT SUPPRESSION AND POLARITY REVERSAL PROTECTION - Continued														
	M39016/26 3/													
6.0	-026Z	103-3	2	9	1.0	0.20	0.10	0.1	---	---	0.1	---	---	.187
6.0	-034Z													.500
9.0	-031Z	"	"	"	"	"	"	"	"	"	"	"	"	.187
9.0	-039Z	"	"	"	"	"	"	"	"	"	"	"	"	.500
12.0	-027Z	"	"	"	"	"	"	"	"	"	"	"	"	.187
12.0	-035Z	"	"	"	"	"	"	"	"	"	"	"	"	.500
18.0	-032Z	"	"	"	"	"	"	"	"	"	"	"	"	.187
18.0	-040Z	"	"	"	"	"	"	"	"	"	"	"	"	.500
26.5	-028Z	"	"	"	"	"	"	"	"	"	"	"	"	.187
26.5	-036Z	"	"	"	"	"	"	"	"	"	"	"	"	.500
32.0	-029Z	"	"	"	"	"	"	"	"	"	"	"	"	.187
32.0	-037Z	"	"	"	"	"	"	"	"	"	"	"	"	.500
40.0	-030Z	"	"	"	"	"	"	"	"	"	"	"	"	.187
40.0	-038Z	"	"	"	"	"	"	"	"	"	"	"	"	.500
DPDT CONTACTS - 2 FORM C														
	M39016/11 3/													
5.0	-018Z	103-4	2	9	1.0	0.2	0.10	0.1	---	---	0.1	---	---	.187
5.0	-033Z	103-4	2	9	1.0	0.2	0.10	---	---	---	---	---	---	.500

See footnotes at end of table.

Downloaded from http://www.everyspec.com

TABLE 103.I 1/ Relays, EM, ER, sensitive, dc operated, part numbers and characteristics - Continued.

Rated coil voltage	Part number 2/	Figure number	Shock (see table II)	Vibration (see table III)	System voltage and frequency-contact current in amperes: 28 V dc Resistive	28 V dc Inductive	28 V dc Lamp	400 Hz 115 V 1-phase Resistive	400 Hz 115 V 1-phase Inductive	400 Hz 115 V 1-phase Lamp	60 Hz 115 V 1-phase Resistive	60 Hz 115 V 1-phase Inductive	60 Hz 115 V 1-phase Lamp	Terminal style (see table IV)
DPDT CONTACTS - 2 FORM C - Continued														
	M39016/11 3/													
6.0 6.0	-020Z -034Z	103-4	2	9	1.0	0.2	0.10	0.1	---	---	0.1	---	---	.187 .500
9.0 9.0	-030Z -039Z	" "	" "	" "	" "	" "	" "	" "	" "	" "	" "	" "	" "	.187 .500
12.0 12.0	-022Z -035Z	" "	" "	" "	" "	" "	" "	" "	" "	" "	" "	" "	" "	.187 .500
18.0 18.0	-032Z -040Z	" "	" "	" "	" "	" "	" "	" "	" "	" "	" "	" "	" "	.187 .500
26.5 26.5	-024Z -036Z	" "	" "	" "	" "	" "	" "	" "	" "	" "	" "	" "	" "	.187 .500
36.0 36.0	-026Z -037Z	" "	" "	" "	" "	" "	" "	" "	" "	" "	" "	" "	" "	.187 .500
48.0 48.0	-028Z -038Z	" "	" "	" "	" "	" "	" "	" "	" "	" "	" "	" "	" "	.187 .500

See footnotes at end of table.

Downloaded from http://www.everyspec.com

Rated coil voltage	Part number 2/	Figure number	Shock (see table II)	Vibration (see table III)	Resis-tive	Induc-tive	Lamp	Resis-tive	Induc-tive	Lamp	Resis-tive	Induc-tive	Lamp	Terminal style (see table IV)
DPDT CONTACTS - 2 FORM C - Continued														
	M39016/41 3/													
5.0 5.0	-033Z -041Z	103-5 "	2 "	9 "	1.0 "	0.2 "	0.1 "	0.1 "	--- "	--- "	0.1 "	--- "	--- "	--- "
6.0 6.0	-034Z -042Z	" "	" "	" "	" "	" "	" "	" "	" "	" "	" "	" "	" "	" "
9.0 9.0	-039Z -047Z	" "	" "	" "	" "	" "	" "	" "	" "	" "	" "	" "	" "	" "
12.0 12.0	-035Z -043Z	" "	" "	" "	" "	" "	" "	" "	" "	" "	" "	" "	" "	" "
18.0 18.0	-040Z -048Z	" "	" "	" "	" "	" "	" "	" "	" "	" "	" "	" "	" "	" "
26.5 26.5	-036Z -044Z	" "	" "	" "	" "	" "	" "	" "	" "	" "	" "	" "	" "	" "
36.0 36.0	-037Z -045Z	" "	" "	" "	" "	" "	" "	" "	" "	" "	" "	" "	" "	" "
48.0 48.0	-038Z -046Z	" "	" "	" "	" "	" "	" "	" "	" "	" "	" "	" "	" "	" "

See footnotes at end of table.

Downloaded from http://www.everyspec.com

TABLE 103.I 1/ Relays, EM, ER, sensitive, dc operated, part numbers and characteristics - Continued.

Rated coil voltage	Part number 2/	Figure number	Shock (see table II)	Vibration (see table III)	System voltage and frequency-contact current in amperes									Terminal style (see table IV)
					28 V dc			400 Hz 115 V 1-phase			60 Hz 115 V 1-phase			
					Resistive	Inductive	Lamp	Resistive	Inductive	Lamp	Resistive	Inductive	Lamp	
DPDT CONTACTS - 2 FORM C - Continued														
	M39016/44 3/ Flange B													
5.0	001Z	103-6	3	9	2.0	0.75	0.10	0.1	---	---	0.1	---	---	L
5.0	002Z	"	"	"	"	"	"	"	"	"	"	"	"	SP
	Flange C													
5.0	004Z	"	"	"	"	"	"	"	"	"	"	"	"	L
5.0	005Z	"	"	"	"	"	"	"	"	"	"	"	"	SP
	No mount													
5.0	007Z	"	"	"	"	"	"	"	"	"	"	"	"	L
5.0	008Z	"	"	"	"	"	"	"	"	"	"	"	"	SP
	Flange B													
6.0	010Z	"	"	"	"	"	"	"	"	"	"	"	"	L
6.0	011Z	"	"	"	"	"	"	"	"	"	"	"	"	SP
	Flange C													
6.0	013Z	"	"	"	"	"	"	"	"	"	"	"	"	L
6.0	014Z	"	"	"	"	"	"	"	"	"	"	"	"	SP
	No mount													
6.0	016Z	"	"	"	"	"	"	"	"	"	"	"	"	L
6.0	017Z	"	"	"	"	"	"	"	"	"	"	"	"	SP

See footnotes at end of table.

Downloaded from http://www.everyspec.com

TABLE 103.I 1/ Relays, EM, ER, sensitive, dc operated, part numbers and characteristics - Continued.

Rated coil voltage	Part number 2/	Figure number	Shock (see table II)	Vibration (see table III)	System voltage and frequency-contact current in amperes									Terminal style (see table IV)
					28 V dc			400 Hz 115 V 1-phase			60 Hz 115 V 1-phase			
					Resistive	Inductive	Lamp	Resistive	Inductive	Lamp	Resistive	Inductive	Lamp	
DPDT CONTACTS - 2 FORM C - Continued														
	M39016/44 3/ Flange B													
12.0	019Z	103-6	3	9	2.0	0.75	0.10	0.10	---	---	0.10	---	---	L
12.0	020Z	"	"	"	"	"	"	"	"	"	"	"	"	SP
	Flange C													
12.0	022Z	"	"	"	"	"	"	"	"	"	"	"	"	L
12.0	023Z	"	"	"	"	"	"	"	"	"	"	"	"	SP
	No mount													
12.0	025Z	"	"	"	"	"	"	"	"	"	"	"	"	L
12.0	026Z	"	"	"	"	"	"	"	"	"	"	"	"	SP
	Flange B													
26.5	028Z	"	"	"	"	"	"	"	"	"	"	"	"	L
26.5	029Z	"	"	"	"	"	"	"	"	"	"	"	"	SP
	Flange C													
26.5	031Z	"	"	"	"	"	"	"	"	"	"	"	"	L
26.5	032Z	"	"	"	"	"	"	"	"	"	"	"	"	SP
	No mount													
26.5	034Z	"	"	"	"	"	"	"	"	"	"	"	"	L
26.5	035Z	"	"	"	"	"	"	"	"	"	"	"	"	SP

See footnotes at end of table.

Downloaded from http://www.everyspec.com

TABLE 103.I 1/ Relays, EM, ER, sensitive, dc operated, part numbers and characteristics - Continued.

Rated coil voltage	Part number 2/	Figure number	Shock (see table II)	Vibration (see table III)	System voltage and frequency-contact current in amperes: 28 V dc Resistive	28 V dc Inductive	28 V dc Lamp	400 Hz 115 V 1-phase Resistive	400 Hz 115 V 1-phase Inductive	400 Hz 115 V 1-phase Lamp	60 Hz 115 V 1-phase Resistive	60 Hz 115 V 1-phase Inductive	60 Hz 115 V 1-phase Lamp	Terminal style (see table IV)
DPDT CONTACTS - 2 FORM C - Continued														
	M39016/44 3/ Flange B		-											
36.0	037Z	103-6	3	9	2.0	0.75	0.10	0.10	---	---	0.10	---	---	L
36.0	038Z	"	"	"	"	"	"	"	"	"	"	"	"	SP
	Flange C													
36.0	040Z	"	"	"	"	"	"	"	"	"	"	"	"	L
36.0	041Z	"	"	"	"	"	"	"	"	"	"	"	"	SP
	No mount													
36.0	043Z	"	"	"	"	"	"	"	"	"	"	"	"	L
36.0	044Z	"	"	"	"	"	"	"	"	"	"	"	"	SP
	M39016/48 3/													
5.0	001Z	103-7	"	"	0.5	0.1	---	---	"	"	---	"	"	SP
12.0	002Z	"	"	"	0.5	0.1	"	"	"	"	"	"	"	SP
26.5	003Z	"	"	"	0.5	0.1	"	"	"	"	"	"	"	SP
DPDT CONTACTS - 2 FORM C - WITH DIODE COIL TRANSIENT SUPPRESSION														
	M39016/16 3/													
5.0	-025Z	103-8	2	9	1.0	0.2	0.10	---	---	---	---	---	---	.187
5.0	-033Z	103-8	2	9	1.0	0.2	0.10	---	---	---	---	---	---	.500

See footnotes at end of table.

Downloaded from http://www.everyspec.com

Rated coil voltage	Part number 2/	Figure number	Shock (see table II)	Vibration (see table III)	[illegible]			[illegible]			[illegible]			Terminal style (see table IV)
					Resistive	Inductive	Lamp	Resistive	Inductive	Lamp	Resistive	Inductive	Lamp	
DPDT CONTACTS - 2 FORM C - WITH DIODE COIL TRANSIENT SUPPRESSION - Continued														
	M39016/16 3/													
6.0	-026Z	103-8	2	9	1.0	0.2	0.10	0.10	---	---	0.10	---	---	.187
6.0	-034Z	"	"	"	"	"	"	"	"	"	"	"	"	.500
9.0	-031Z	"	"	"	"	"	"	"	"	"	"	"	"	.187
9.0	-039Z	"	"	"	"	"	"	"	"	"	"	"	"	.500
12.0	-027Z	"	"	"	"	"	"	"	"	"	"	"	"	.187
12.0	-035Z	"	"	"	"	"	"	"	"	"	"	"	"	.500
18.0	-032Z	"	"	"	"	"	"	"	"	"	"	"	"	.187
18.0	-040Z	"	"	"	"	"	"	"	"	"	"	"	"	.500
26.5	-028Z	"	"	"	"	"	"	"	"	"	"	"	"	.187
26.5	-036Z	"	"	"	"	"	"	"	"	"	"	"	"	.500
36.0	-029X	"	"	"	"	"	"	"	"	"	"	"	"	.187
36.0	-037X	"	"	"	"	"	"	"	"	"	"	"	"	.500
48.0	-030X	"	"	"	"	"	"	"	"	"	"	"	"	.187
48.0	-038X	"	"	"	"	"	"	"	"	"	"	"	"	.500
	M39016/42 3/													
5.0	-033Z	103-9	2	9	1.0	0.2	0.1	0.10	---	---	0.10	---	---	.500
5.0	-041Z	"	"	"	"	"	"	"	"	"	"	"	"	.187
6.0	-034Z	"	"	"	"	"	"	"	"	"	"	"	"	.500
6.0	-042Z	"	"	"	"	"	"	"	"	"	"	"	"	.187
9.0	-039Z	"	"	"	"	"	"	"	"	"	"	"	"	.500
9.0	-047Z	"	"	"	"	"	"	"	"	"	"	"	"	.187
12.0	-035Z	"	"	"	"	"	"	"	"	"	"	"	"	.500
12.0	-043Z	"	"	"	"	"	"	"	"	"	"	"	"	.187
18.0	-040Z	"	"	"	"	"	"	"	"	"	"	"	"	.500
18.0	-048Z	"	"	"	"	"	"	"	"	"	"	"	"	.187

See footnotes at end of table.

Downloaded from http://www.everyspec.com

TABLE 103.I 1/ Relays, EM, ER, sensitive, dc operated, part numbers and characteristics - Continued.

Rated coil voltage	Part number 2/	Figure number	Shock (see table II)	Vibration (see table III)	System voltage and frequency-contact current in amperes									Terminal style (see table IV)
					28 V dc			400 Hz 115 V 1-phase			60 Hz 115 V 1-phase			
					Resistive	Inductive	Lamp	Resistive	Inductive	Lamp	Resistive	Inductive	Lamp	
DPDT CONTACTS - 2 FORM C - WITH DIODE COIL TRANSIENT SUPPRESSION - Continued														
	M39016/42 3/													
26.5	-036Z	103-9	2	9	1.0	0.2	0.1	0.10	---	---	0.10	---	---	.500
26.5	-044Z	"	"	"	"	"	"	"	"	"	"	"	"	.187
36.0	-037Z	"	"	"	"	"	"	"	"	"	"	"	"	.500
36.0	-045Z	"	"	"	"	"	"	"	"	"	"	"	"	.187
48.0	-038Z	"	"	"	"	"	"	"	"	"	"	"	"	.500
48.0	-046Z	"	"	"	"	"	"	"	"	"	"	"	"	.187
DPDT CONTACTS - 2 FORM C - WITH DIODE COIL TRANSIENT SUPPRESSION AND POLARITY REVERSAL PROTECTION														
	M39016/21 3/													
5.0	-019Z	103-10	2	9	1.0	0.2	0.10	0.10	---	---	0.10	---	---	.187
5.0	-033Z	"	"	"	"	"	"	"	"	"	"	"	"	.500
6.0	-020Z	"	"	"	"	"	"	"	"	"	"	"	"	.187
6.0	-034Z	"	"	"	"	"	"	"	"	"	"	"	"	.500
9.0	-021Z	"	"	"	"	"	"	"	"	"	"	"	"	.187
9.0	-035Z	"	"	"	"	"	"	"	"	"	"	"	"	.500
12.0	-022Z	"	"	"	"	"	"	"	"	"	"	"	"	.187
12.0	-036Z	"	"	"	"	"	"	"	"	"	"	"	"	.500
18.0	-023Z	"	"	"	"	"	"	"	"	"	"	"	"	.187
18.0	-037Z	"	"	"	"	"	"	"	"	"	"	"	"	.500
26.5	-024Z	"	"	"	"	"	"	---	---	---	---	---	---	.187
26.5	-038Z	"	"	"	"	"	"	"	"	"	"	"	"	.500

See footnotes at end of table.

Downloaded from http://www.everyspec.com

Rated coil voltage	Part number 2/	Figure number	Shock (see table II)	Vibration (see table III)	Resistive	Inductive	Lamp	Resistive	Inductive	Lamp	Resistive	Inductive	Lamp	Terminal style (see table IV)
DPDT CONTACTS - 2 FORM C - WITH DIODE COIL TRANSIENT SUPPRESSION AND POLARITY REVERSAL PROTECTION - Continued														
	M39016/21 3/													
36.0	-031Z	103-10	2	9	1.0	0.2	0.10	0.10	---	---	0.10	---	---	.187
36.0	-039Z	"	"	"	"	"	"	"	"	"	"	"	"	.500
48.0	-032Z	"	"	"	"	"	"	"	"	"	"	"	"	.187
48.0	-040Z	"	"	"	"	"	"	"	"	"	"	"	"	.500
	M39016/43 3/													
5.0	-033Z	103-11	"	"	"	"	"	"	"	"	"	"	"	.500
5.0	-041Z	"	"	"	"	"	"	"	"	"	"	"	"	.187
6.0	-034Z	"	"	"	"	"	"	"	"	"	"	"	"	.500
6.0	-042Z	"	"	"	"	"	"	"	"	"	"	"	"	.187
9.0	-035Z	"	"	"	"	"	"	"	"	"	"	"	"	.500
9.0	-043Z	"	"	"	"	"	"	"	"	"	"	"	"	.187
12.0	-036Z	"	"	"	"	"	"	"	"	"	"	"	"	.500
12.0	-044Z	"	"	"	"	"	"	"	"	"	"	"	"	.187
18.0	-037Z	"	"	"	"	"	"	"	"	"	"	"	"	.500
18.0	-045Z	"	"	"	"	"	"	"	"	"	"	"	"	.187
26.5	-038Z	"	"	"	"	"	"	"	"	"	"	"	"	.500
26.5	-046Z	"	"	"	"	"	"	"	"	"	"	"	"	.187
36.0	-039Z	"	"	"	"	"	"	"	"	"	"	"	"	.500
36.0	-047Z	"	"	"	"	"	"	"	"	"	"	"	"	.187
48.0	-040Z	"	"	"	"	"	"	"	"	"	"	"	"	.500
48.0	-048Z	"	"	"	"	"	"	"	"	"	"	"	"	.187

1/ These relays are not recommended in critical applications or in applications where a less sensitive relay can be used.

2/ The symbol "Z" is used to indicate that a failure rate symbol is required. See table V and the latest qualified products list (QPL) of the specification being used.

3/ Relay possesses high level and low level capabilities. The low level rating is 10-50 microamperes at 10-50 millivolts or peak ac.

Downloaded from http://www.everyspec.com

Downloaded from http://www.everyspec.com

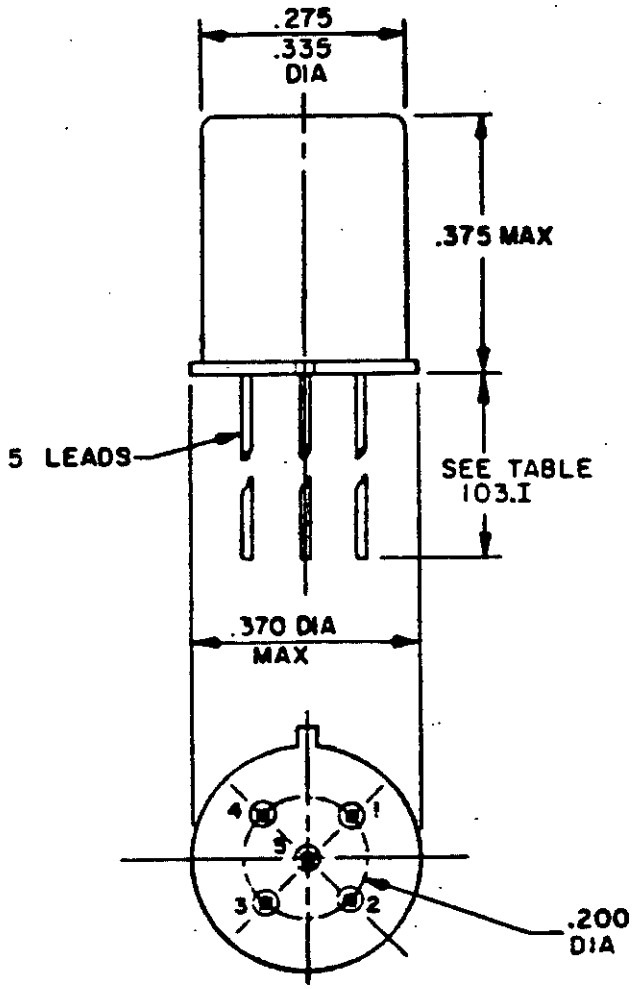

INCHES	MM
.200	5.08
.275	6.99
.335	8.51
.370	9.40
.375	9.53

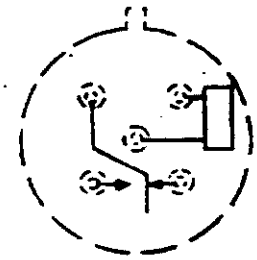

CIRCUIT DIAGRAM

FIGURE 103-1. Relay, EM, ER, SPDT, low level to 1 ampere (sensitive, 40 milliwatts) (MIL-R-39016/10).

Downloaded from http://www.everyspec.com

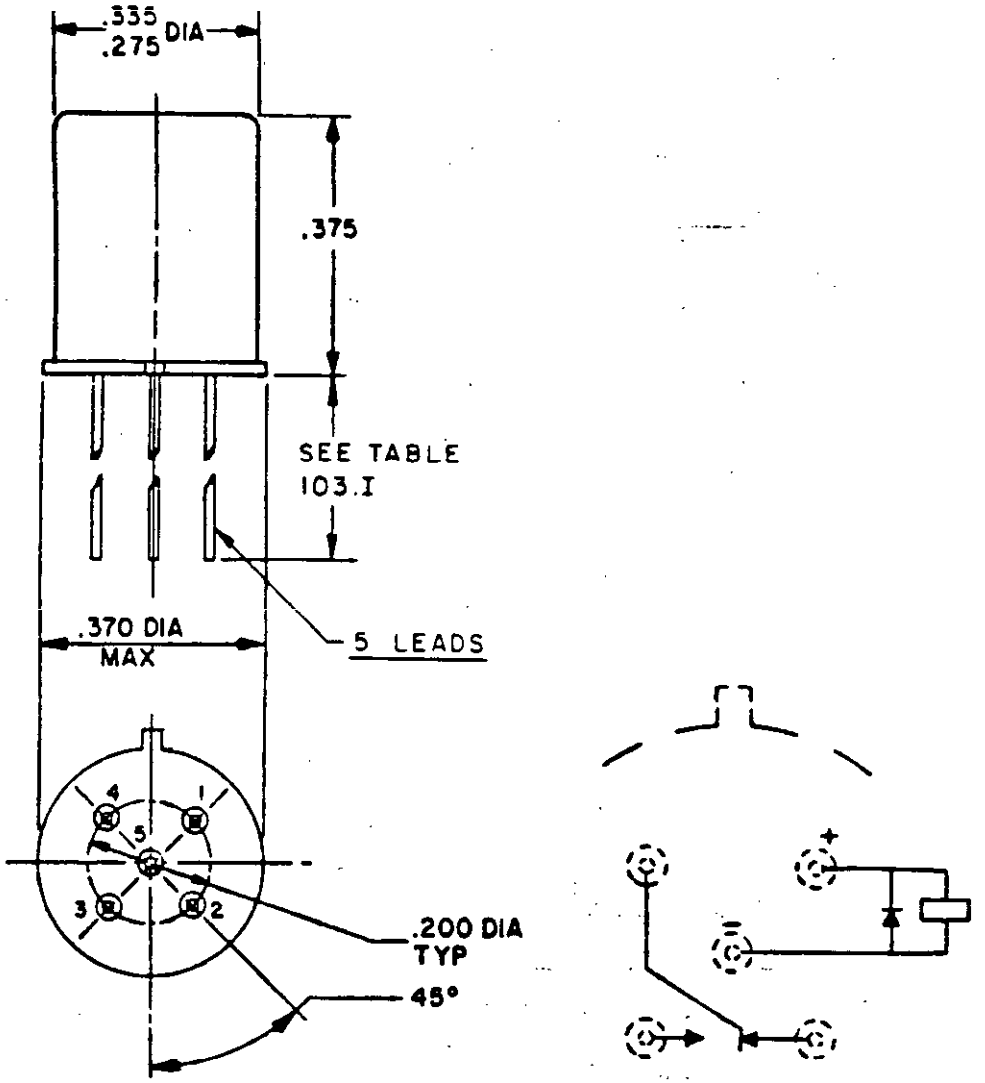

INCHES	MM
.200	5.08
.275	6.99
.335	8.51
.370	9.40
.375	9.53

FIGURE 103-2. Relay, EM, ER, SPDT, low level to 1 ampere (sensitive, 40 milliwatts) with an internal diode for coil transient suppression (MIL-R-39016/25).

Downloaded from http://www.everyspec.com

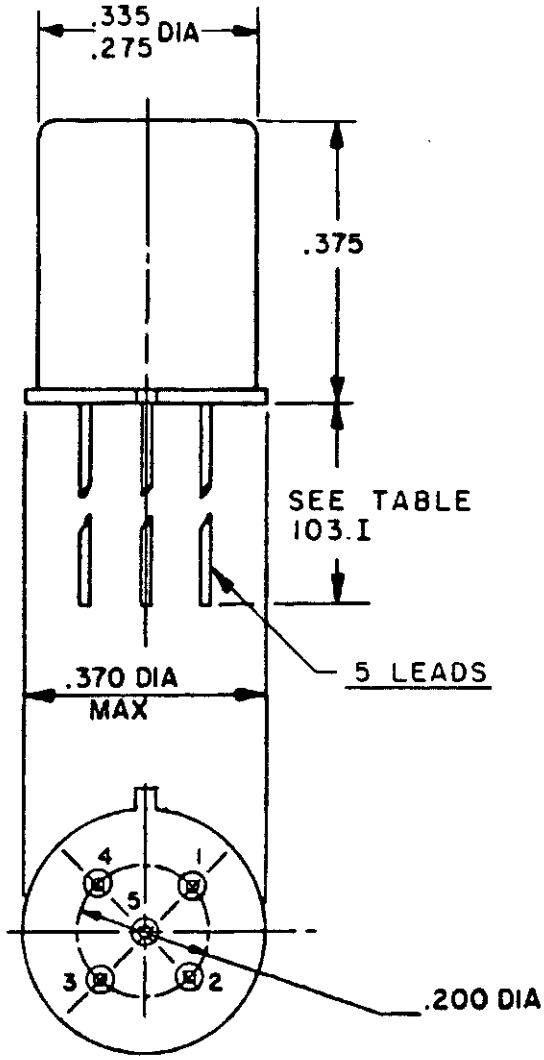

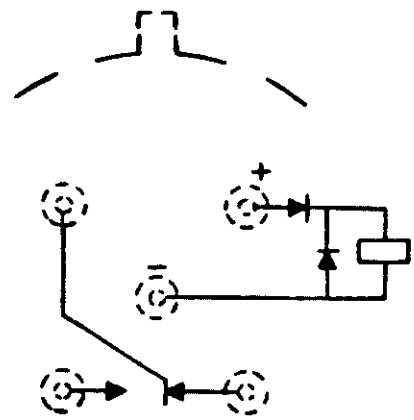

CIRCUIT DIAGRAM
TERMINAL VIEW

INCHES	MM
.200	5.08
.275	6.99
.335	8.51
.370	9.40
.375	9.53

FIGURE 103-3. Relay, EM, ER, SPDT, low level to 1 ampere (sensitive, 40 milliwatts) with internal diodes for coil transient suppression and polarity reversal protection (MIL-R-39016/26).

Downloaded from http://www.everyspec.com

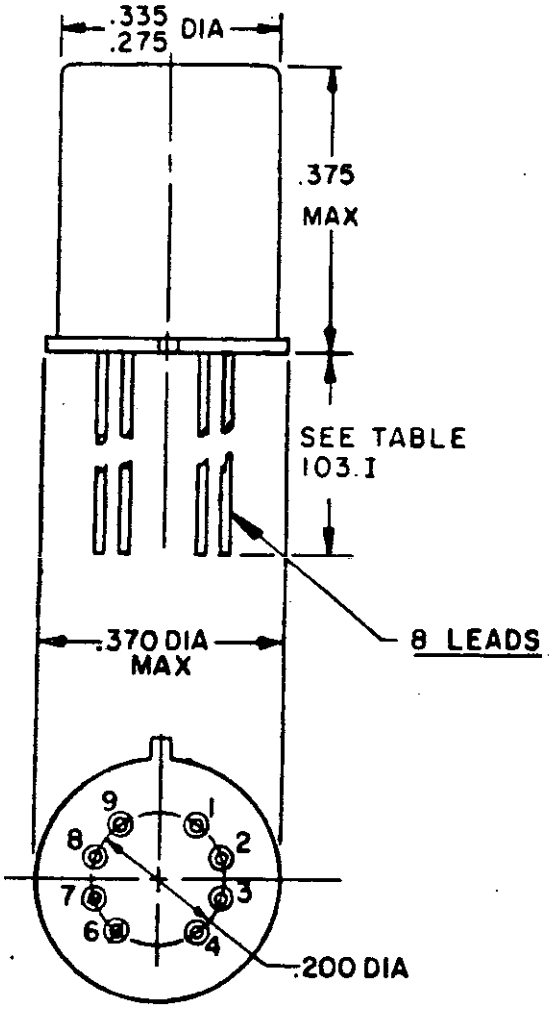

INCHES	MM
.200	5.08
.275	6.99
.335	8.51
.370	9.40
.375	9.53

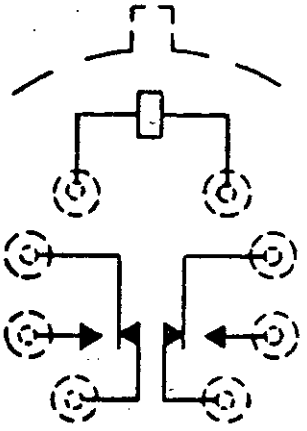

CIRCUIT DIAGRAM
TERMINAL VIEW

FIGURE 103-4. Relay, EM, ER, DPDT, low level to 1 ampere (sensitive, 60 milliwatts) (MIL-R-39016/11).

Downloaded from http://www.everyspec.com

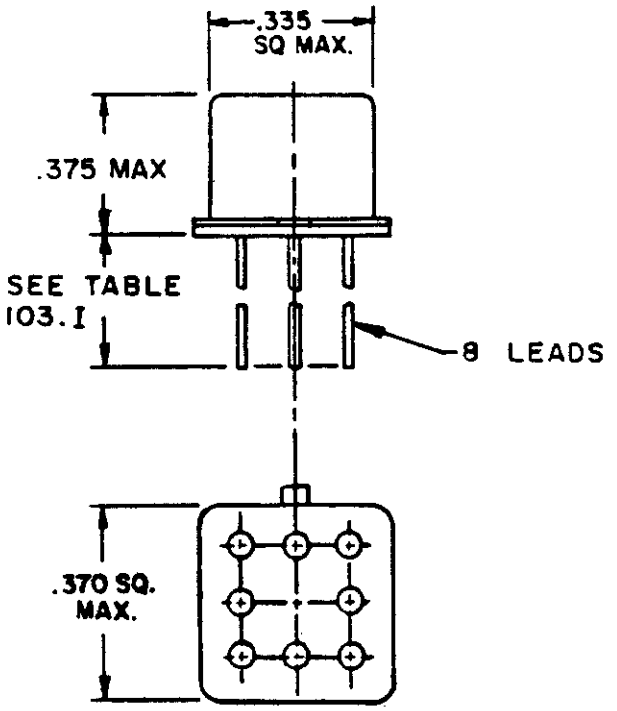

INCHES	MM
.335	8.51
.375	9.53
.370	9.40

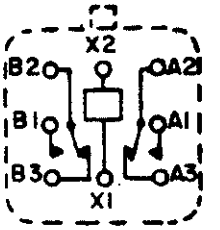

CIRCUIT DIAGRAM
TERMINAL VIEW

FIGURE 103-5. Relay, EM, ER, DPDT, low level to 1 ampere (sensitive, 60 milliwatts) (MIL-R-39016/41).

Downloaded from http://www.everyspec.com

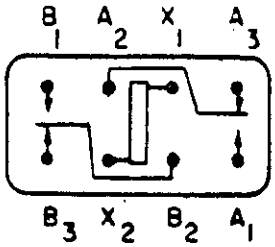

CIRCUIT DIAGRAM

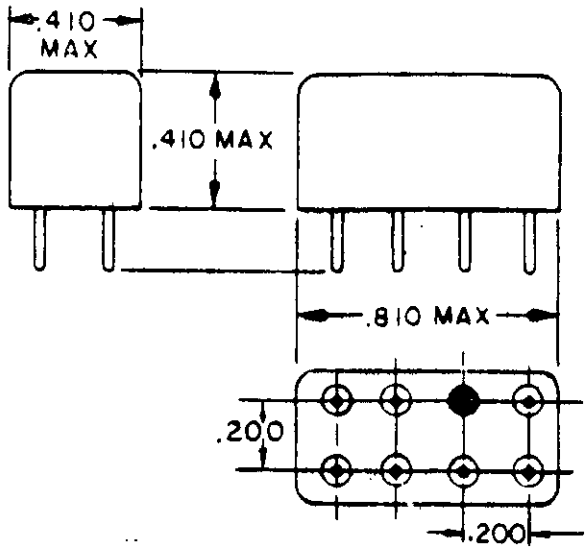

NO MOUNT

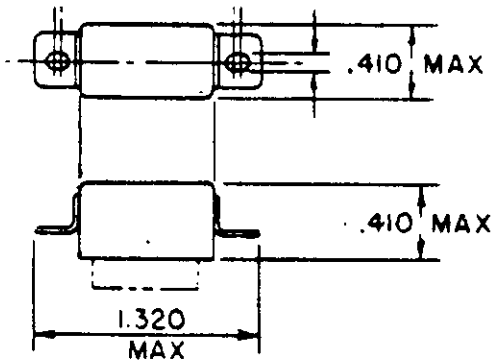

FLANGE MOUNT "B

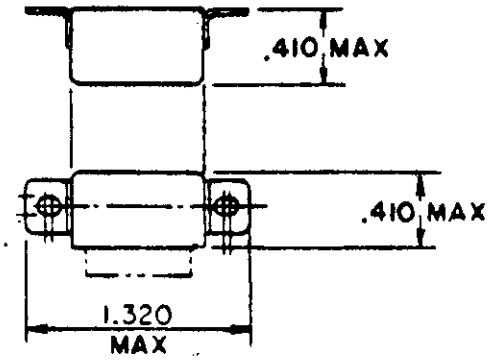

FLANGE MOUNT C

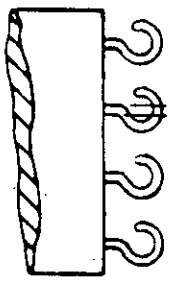

SOLDER LUG

INCHES	MM
.200	5.08
.410	10.41
1.320	33.53

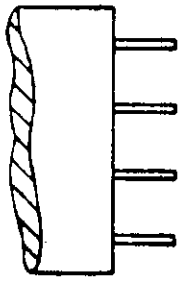

PIN
(PRINTED CIRCUIT)

FIGURE 103-6. Relay, EM, ER, DPDT, low level to 2 amperes, (sensitive, 100/125 milliwatts), (MIL-R-39016/44).

Downloaded from http://www.everyspec.com

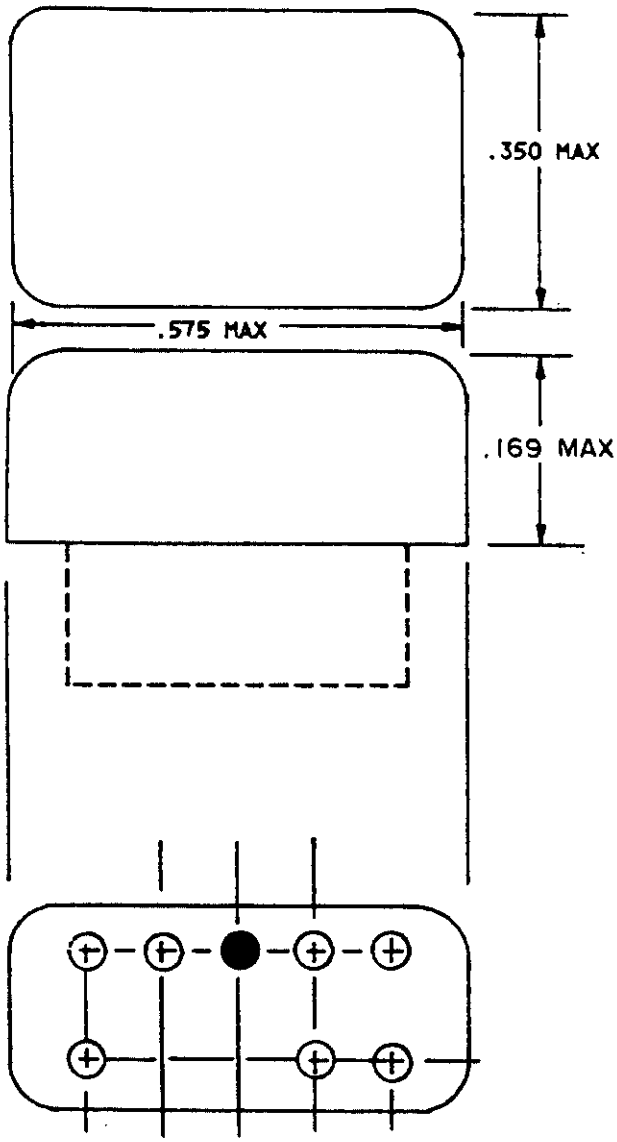

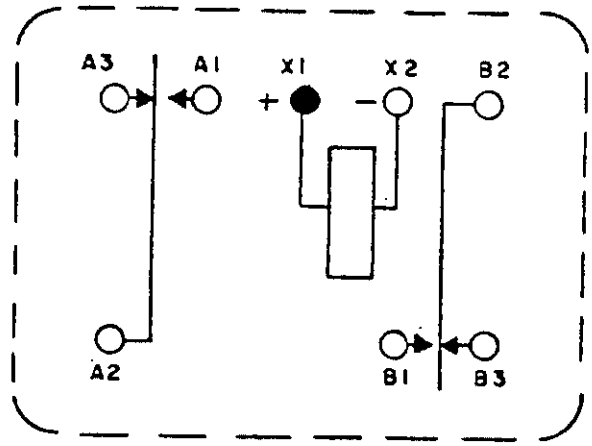

CIRCUIT DIAGRAM
TERMINAL VIEW
DEENERGIZED POSITION

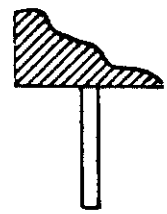

WIRE LEAD
SOLDER PIN - (SP)

INCHES	MM
.169	4.29
.350	8.89
.575	14.60

FIGURE 103-7. Relay, EM, ER, DPDT, low level to 0.5 ampere, sensitive (MIL-R-39016/48).

Downloaded from http://www.everyspec.com

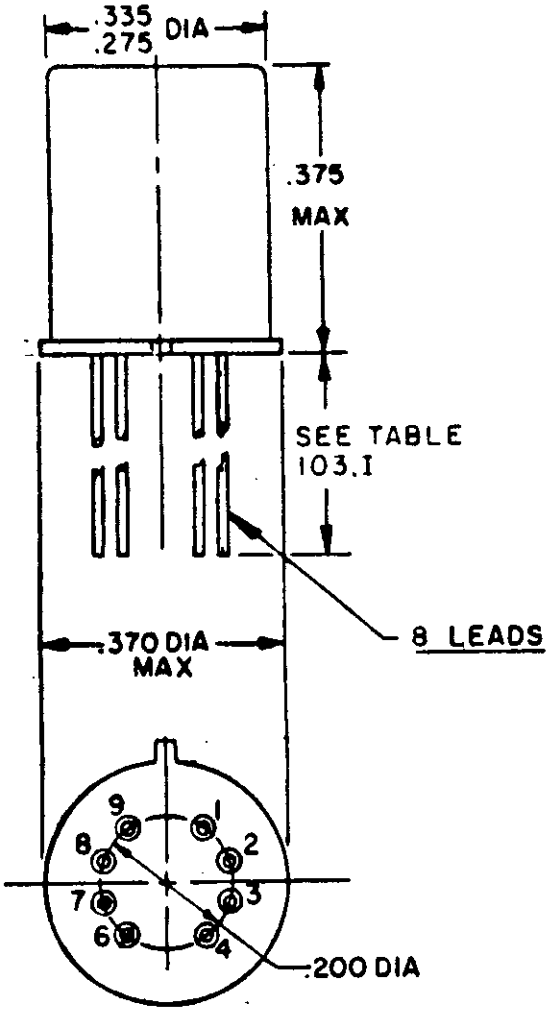

INCHES	MM
.200	5.08
.275	6.99
.335	8.51
.370	9.40
.375	9.53

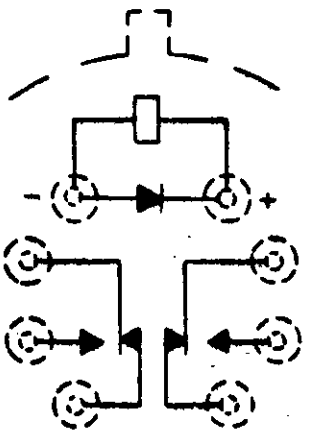

CIRCUIT DIAGRAM
TERMINAL VIEW

FIGURE 103-8. Relay, EM, ER, DPDT, low level to 1 ampere (sensitive, 60 milliwatts) with internal diode for coil transient suppression (MIL-R-39016/16).

Downloaded from http://www.everyspec.com

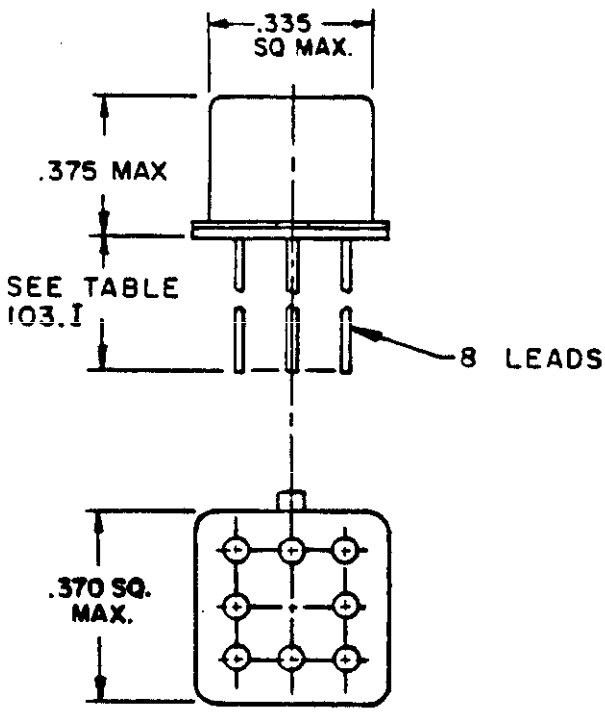

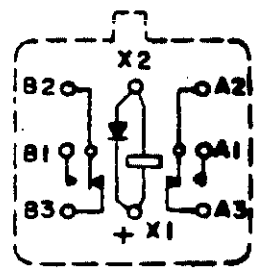

CIRCUIT DIAGRAM
TERMINAL VIEW

INCHES	MM
.335	8.51
.370	9.40
.375	9.53

FIGURE 103-9. Relay, EM, ER, DPDT, low level to 1 ampere (sensitive, 60 milliwatts) with internal diode for coil transient suppression (MIL-R-39016/42).

Downloaded from http://www.everyspec.com

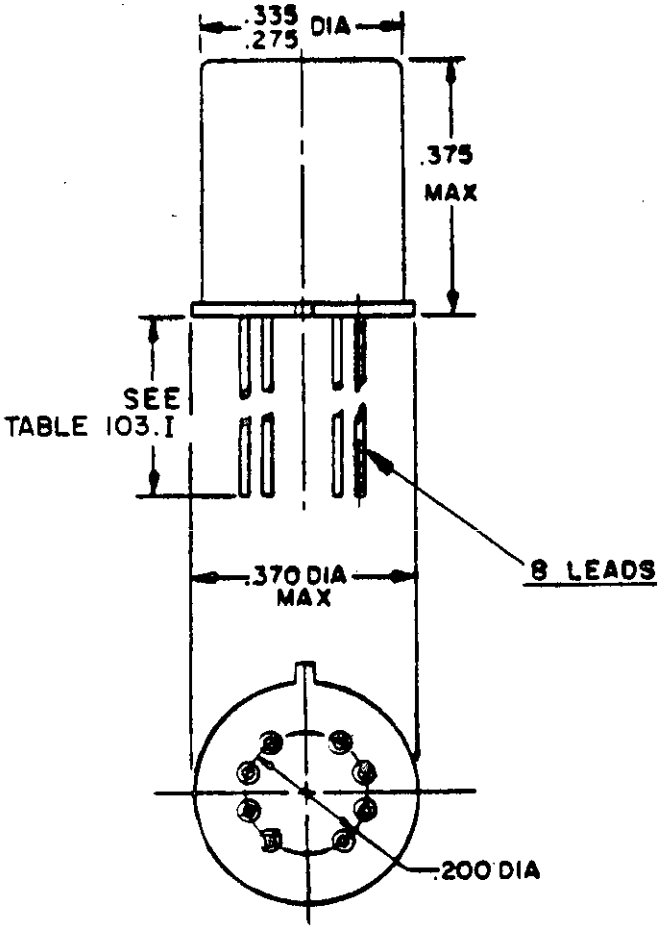

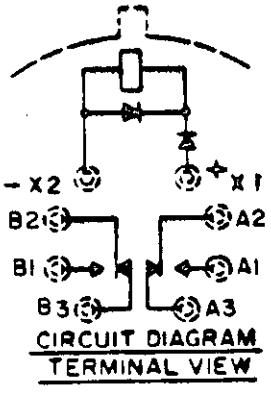

INCHES	MM
.200	5.08
.275	6.99
.335	8.51
.370	9.40
.375	9.53

FIGURE 103-10. Relay, EM, ER, DPDT, low level to 1 ampere (sensitive, 60 milliwatts) with internal diode for coil transient suppression and polarity reversal protection (MIL-R-39016/21).

Downloaded from http://www.everyspec.com

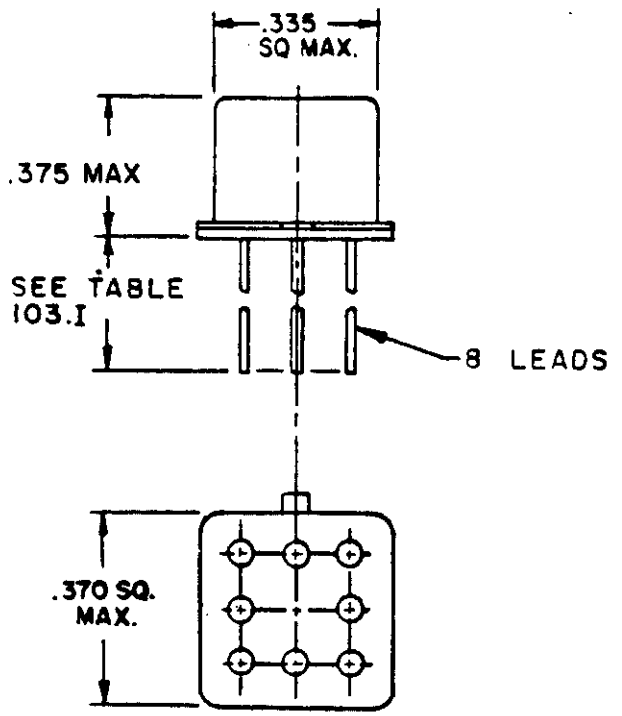

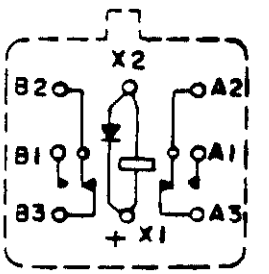

CIRCUIT DIAGRAM
TERMINAL VIEW

INCHES	MM
.100	2.54
.335	8.51
.370	9.40
.375	9.53

FIGURE 103-11. Relay, EM, ER, DPDT, low level to 1 ampere (sensitive, 60 milliwatts) with internal diode for coil transient suppression and polarity reversal protection (MIL-R-39016/43).

Downloaded from http://www.everyspec.com

SUBSECTION 104

RELAYS, ELECTROMAGNETIC (EM), ESTABLISHED RELIABILITY (ER), LATCHING, DC OPERATED

(Applicable specification: MIL-R-39016)

SCOPE: This subsection covers relays with coils dc voltage rated. Latching relays maintain their contacts in the last position assumed without the need of maintaining coil energization.

RELAYS, ELECTROMAGNETIC (EM), ESTABLISHED RELIABILITY (ER), LATCHING, DC OPERATED

(Applicable specification: MIL-R-39016)

Duty cycle: Continuous
Enclosure: Hermetically sealed
Operating temperature range: B (see table I)

TABLE 104.I. Relays, EM, ER, latching, dc operated, part numbers and characteristics.

Rated coil voltage	Part number 1/	Figure number	Shock (see table II)	Vibration (see table III)	System voltage and frequency - contact current in amperes																				Terminal style (see table IV)
					28 V dc				400 Hz								50/60 Hz								
									115 V 1-phase				115/200 V 3-phase				115 V 1-phase				115/200 V 3-phase				
					Resistive	Inductive	Motor	Lamp	Resistive	Inductive	Motor	Lamp	Resistive	Inductive	Motor	Lamp	Resistive	Inductive	Motor	Lamp	Resistive	Inductive	Motor	Lamp	
SPDT CONTACTS - 1 FORM C, LATCHING																									
	M39016/8 2/																								
5.0	-014Z	104-1	3	9	.5	.1	---	.05	.05	---	---	---	---	---	---	---	.05	---	---	---	---	---	---	---	.187
5.0	-025Z	"	"	"	"	"	"	"	"	"	"	"	"	"	"	"	"	"	"	"	"	"	"	"	.500
6.0	-016Z	"	"	"	"	"	"	"	"	"	"	"	"	"	"	"	"	"	"	"	"	"	"	"	.187
6.0	-026Z	"	"	"	"	"	"	"	"	"	"	"	"	"	"	"	"	"	"	"	"	"	"	"	.500
9.0	-018Z	"	"	"	"	"	"	"	"	"	"	"	"	"	"	"	"	"	"	"	"	"	"	"	.187
9.0	-027Z	"	"	"	"	"	"	"	"	"	"	"	"	"	"	"	"	"	"	"	"	"	"	"	.500
12.0	-020Z	"	"	"	"	"	"	"	"	"	"	"	"	"	"	"	"	"	"	"	"	"	"	"	.187
12.0	-028Z	"	"	"	"	"	"	"	"	"	"	"	"	"	"	"	"	"	"	"	"	"	"	"	.500
18.0	-022Z	"	"	"	"	"	"	"	"	"	"	"	"	"	"	"	"	"	"	"	"	"	"	"	.187
18.0	-029Z	"	"	"	"	"	"	"	"	"	"	"	"	"	"	"	"	"	"	"	"	"	"	"	.500
26.5	-024Z	"	"	"	"	"	"	"	"	"	"	"	"	"	"	"	"	"	"	"	"	"	"	"	.187
26.5	-030Z	"	"	"	"	"	"	"	"	"	"	"	"	"	"	"	"	"	"	"	"	"	"	"	.500
SPDT CONTACTS - 1 FORM C, LATCHING, WITH DIODE COIL TRANSIENT SUPPRESSION																									
	M39016/27 2/																								
5.0	-019Z	104-2	3	9	.5	.1	---	.05	.05	---	---	---	---	---	---	---	.05	---	---	---	---	---	---	---	.187
5.0	-025Z	"	"	"	"	"	"	"	"	"	"	"	"	"	"	"	"	"	"	"	"	"	"	"	.500
6.0	-020Z	"	"	"	"	"	"	"	"	"	"	"	"	"	"	"	"	"	"	"	"	"	"	"	.187
6.0	-026Z	"	"	"	"	"	"	"	"	"	"	"	"	"	"	"	"	"	"	"	"	"	"	"	.500
9.0	-021Z	"	"	"	"	"	"	"	"	"	"	"	"	"	"	"	"	"	"	"	"	"	"	"	.187
9.0	-027Z	"	"	"	"	"	"	"	"	"	"	"	"	"	"	"	"	"	"	"	"	"	"	"	.500

See footnotes at end of table.

Downloaded from http://www.everyspec.com

TABLE 104.I. Relays, EM, ER, latching, dc operated, part numbers and characteristics - Continued.

Rated coil voltage	Part number 1/	Figure number	Shock (see table II)	Vibration (see table III)	System voltage and frequency - contact current in amperes: 28 V dc Resistive	28 V dc Inductive	28 V dc Motor	28 V dc Lamp	400 Hz 115 V 1-phase Resistive	400 Hz 115 V 1-phase Inductive	400 Hz 115 V 1-phase Motor	400 Hz 115 V 1-phase Lamp	400 Hz 115/200 V 3-phase Resistive	400 Hz 115/200 V 3-phase Inductive	400 Hz 115/200 V 3-phase Motor	400 Hz 115/200 V 3-phase Lamp	50/60 Hz 115 V 1-phase Resistive	50/60 Hz 115 V 1-phase Inductive	50/60 Hz 115 V 1-phase Motor	50/60 Hz 115 V 1-phase Lamp	50/60 Hz 115/200 V 3-phase Resistive	50/60 Hz 115/200 V 3-phase Inductive	50/60 Hz 115/200 V 3-phase Motor	50/60 Hz 115/200 V 3-phase Lamp	Terminal style (see table IV)
SPDT CONTACTS - 1 FORM C, LATCHING, WITH DIODE COIL TRANSIENT SUPPRESSION - Continued																									
	M39016/27 2/																								
12.0	-022Z	104-2	3	9	.5	.1	---	.05	.05	---	---	---	---	---	---	---	.05	---	---	---	---	---	---	---	.187
12.0	-028Z	"	"	"	"	"	"	"	"	"	"	"	"	"	"	"	"	"	"	"	"	"	"	"	.500
18.0	-023Z	"	"	"	"	"	"	"	"	"	"	"	"	"	"	"	"	"	"	"	"	"	"	"	.187
18.0	-029Z	"	"	"	"	"	"	"	"	"	"	"	"	"	"	"	"	"	"	"	"	"	"	"	.500
26.5	-024Z	"	"	"	"	"	"	"	"	"	"	"	"	"	"	"	"	"	"	"	"	"	"	"	.187
26.5	-030Z	"	"	"	"	"	"	"	"	"	"	"	"	"	"	"	"	"	"	"	"	"	"	"	.500
SPDT CONTACTS - 1 FORM C, LATCHING, WITH DIODE COIL TRANSIENT SUPPRESSION AND POLARITY REVERSAL PROTECTION																									
	M39016/28 2/																								
5.0	-019Z	104-3	3	9	.5	.1	---	.05	.05	---	---	---	---	---	---	---	.05	---	---	---	---	---	---	---	.187
5.0	-025Z	"	"	"	"	"	"	"	"	"	"	"	"	"	"	"	"	"	"	"	"	"	"	"	.500
6.0	-020Z	"	"	"	"	"	"	"	"	"	"	"	"	"	"	"	"	"	"	"	"	"	"	"	.187
6.0	-026Z	"	"	"	"	"	"	"	"	"	"	"	"	"	"	"	"	"	"	"	"	"	"	"	.500
9.0	-021Z	"	"	"	"	"	"	"	"	"	"	"	"	"	"	"	"	"	"	"	"	"	"	"	.187
9.0	-027Z	"	"	"	"	"	"	"	"	"	"	"	"	"	"	"	"	"	"	"	"	"	"	"	.500
12.0	-022Z	"	"	"	"	"	"	"	"	"	"	"	"	"	"	"	"	"	"	"	"	"	"	"	.187
12.0	-028Z	"	"	"	"	"	"	"	"	"	"	"	"	"	"	"	"	"	"	"	"	"	"	"	.500
18.0	-023Z	"	"	"	"	"	"	"	"	"	"	"	"	"	"	"	"	"	"	"	"	"	"	"	.187
18.0	-029Z	"	"	"	"	"	"	"	"	"	"	"	"	"	"	"	"	"	"	"	"	"	"	"	.500
26.5	-024Z	"	"	"	"	"	"	"	"	"	"	"	"	"	"	"	"	"	"	"	"	"	"	"	.187
26.5	-030Z	"	"	"	"	"	"	"	"	"	"	"	"	"	"	"	"	"	"	"	"	"	"	"	.500
DPDT CONTACTS - 2 FORM C, LATCHING																									
	M39016/12 2/																								
5.0	-037Z 3/	104-6	3	9	1.0	.2	---	.1	.1	---	---	---	---	---	---	---	.1	---	---	---	---	---	---	---	.187
"	-043Z 4/	"	"	"	"	"	"	"	"	"	"	"	"	"	"	"	"	"	"	"	"	"	"	"	.187
"	-049Z 3/	"	"	"	"	"	"	"	"	"	"	"	"	"	"	"	"	"	"	"	"	"	"	"	.500
"	-055Z 4/	"	"	"	"	"	"	"	"	"	"	"	"	"	"	"	"	"	"	"	"	"	"	"	.500

See footnotes at end of table.

Downloaded from http://www.everyspec.com

TABLE 104.I. Relays, EM, ER, latching, dc operated, part numbers and characteristics - Continued.

Rated coil voltage	Part number 1/	Figure number	Shock (see table II)	Vibration (see table III)	System voltage and frequency - contact current in amperes: 28 V dc Resistive	28 V dc Inductive	28 V dc Motor	28 V dc Lamp	400 Hz 115 V 1-phase Resistive	400 Hz 115 V 1-phase Inductive	400 Hz 115 V 1-phase Motor	400 Hz 115 V 1-phase Lamp	400 Hz 115/200 V 3-phase Resistive	400 Hz 115/200 V 3-phase Inductive	400 Hz 115/200 V 3-phase Motor	400 Hz 115/200 V 3-phase Lamp	50/60 Hz 115 V 1-phase Resistive	50/60 Hz 115 V 1-phase Inductive	50/60 Hz 115 V 1-phase Motor	50/60 Hz 115 V 1-phase Lamp	50/60 Hz 115/200 V 3-phase Resistive	50/60 Hz 115/200 V 3-phase Inductive	50/60 Hz 115/200 V 3-phase Motor	50/60 Hz 115/200 V 3-phase Lamp	Terminal style (see table IV)
DPDT CONTACTS - 2 FORM C, LATCHING - Continued																									
	M39016/45 2/																								
	No mount																								
5.0	-001Z	104-4	3	5/	2.0	.75	---	.16	.15	---	---	---	---	---	---	---	.15	---	---	---	---	---	---	---	L
"	-002Z	"	"	"	"	"	"	"	"	"	"	"	"	"	"	"	"	"	"	"	"	"	"	"	SP
	Flange B																								
"	-003Z	"	"	"	"	"	"	"	"	"	"	"	"	"	"	"	"	"	"	"	"	"	"	"	L
"	-004Z	"	"	"	"	"	"	"	"	"	"	"	"	"	"	"	"	"	"	"	"	"	"	"	SP
	Flange C																								
"	-005Z	"	"	"	"	"	"	"	"	"	"	"	"	"	"	"	"	"	"	"	"	"	"	"	L
"	-006Z	"	"	"	"	"	"	"	"	"	"	"	"	"	"	"	"	"	"	"	"	"	"	"	SP
	M39016/45 2/																								
	No mount																								
6.0	-007Z	"	"	"	"	.75	"	"	"	"	"	"	"	"	"	"	.15	"	"	"	---	"	"	"	L
"	-008Z	"	"	"	"	"	"	"	"	"	"	"	"	"	"	"	"	"	"	"	"	"	"	"	SP
	Flange B																								
"	-009Z	"	"	"	"	"	"	"	"	"	"	"	"	"	"	"	"	"	"	"	"	"	"	"	L
"	-010Z	"	"	"	"	"	"	"	"	"	"	"	"	"	"	"	"	"	"	"	"	"	"	"	SP
	Flange C																								
"	-011Z	"	"	"	"	"	"	"	"	"	"	"	"	"	"	"	"	"	"	"	"	"	"	"	L
"	-012Z	"	"	"	"	"	"	"	"	"	"	"	"	"	"	"	"	"	"	"	"	"	"	"	SP
	M39016/12 2/																								
"	-038Z 3/	104-6	3	9	1.0	.2	"	.1	.1	"	"	"	"	"	"	"	.1	"	"	"	---	"	"	"	.187
"	-044Z 4/	"	"	"	"	"	"	"	"	"	"	"	"	"	"	"	"	"	"	"	"	"	"	"	.187
"	-050Z 3/	"	"	"	"	"	"	"	"	"	"	"	"	"	"	"	"	"	"	"	"	"	"	"	.500
"	-056Z 4/	"	"	"	"	"	"	"	"	"	"	"	"	"	"	"	"	"	"	"	"	"	"	"	.500
	M39016/32 2/																								
	Bracket																								
"	-014Z	104-5	"	6	2.0	.8	"	---	.15	.1	"	"	"	"	"	"	.15	.1	"	"	"	"	"	"	L
	Flange																								
"	-015Z	"	"	"	"	"	"	"	"	"	"	"	"	"	"	"	"	"	"	"	"	"	"	"	L
"	-016Z	"	"	"	"	"	"	"	"	"	"	"	"	"	"	"	"	"	"	"	"	"	"	"	SP
	No mount																								
"	-017Z	"	"	"	"	"	"	"	"	"	"	"	"	"	"	"	"	"	"	"	"	"	"	"	L
"	-018Z	"	"	"	"	"	"	"	"	"	"	"	"	"	"	"	"	"	"	"	"	"	"	"	SP

See footnotes at end of table.

Downloaded from http://www.everyspec.com

TABLE 104.I. Relays, EM, ER, latching, dc operated, part numbers and characteristics - Continued.

Rated coil voltage	Part number 2/	Figure number	Shock (see table II)	Vibration (see table III)	System voltage and frequency - contact current in amperes: 28 V dc Resistive	28 V dc Inductive	28 V dc Motor	28 V dc Lamp	400 Hz 115 V 1-phase Resistive	400 Hz 115 V 1-phase Inductive	400 Hz 115 V 1-phase Motor	400 Hz 115 V 1-phase Lamp	400 Hz 115/200 V 3-phase Resistive	400 Hz 115/200 V 3-phase Inductive	400 Hz 115/200 V 3-phase Motor	400 Hz 115/200 V 3-phase Lamp	50/60 Hz 115 V 1-phase Resistive	50/60 Hz 115 V 1-phase Inductive	50/60 Hz 115 V 1-phase Motor	50/60 Hz 115 V 1-phase Lamp	50/60 Hz 115/200 V 3-phase Resistive	50/60 Hz 115/200 V 3-phase Inductive	50/60 Hz 115/200 V 3-phase Motor	50/60 Hz 115/200 V 3-phase Lamp	Terminal style (see table IV)
DPDT CONTACTS - 2 FORM C, LATCHING - Continued																									
	M39016/12 1/																								
9.0	-039Z 3/	104-6	3	9	1.0	.2	---	.1	.1	---	---	---	---	---	---	---	.1	---	---	---	---	---	---	---	.187
"	-045Z 4/	"	"	"	"	"	"	"	"	"	"	"	"	"	"	"	"	"	"	"	"	"	"	"	.187
"	-051Z 3/	"	"	"	"	"	"	"	"	"	"	"	"	"	"	"	"	"	"	"	"	"	"	"	.500
"	-057Z 4/	"	"	"	"	"	"	"	"	"	"	"	"	"	"	"	"	"	"	"	"	"	"	"	.500
	M39016/45 2/																								
	No mount																								
12.0	-013Z	104-4	"	5/	2.0	.75	"	.16	.15	"	"	"	"	"	"	"	.15	"	"	"	"	"	"	"	L
"	-014Z	"	"	"	"	"	"	"	"	"	"	"	"	"	"	"	"	"	"	"	"	"	"	"	SP
	Flange B																								
"	-015Z	"	"	"	"	"	"	"	"	"	"	"	"	"	"	"	"	"	"	"	"	"	"	"	L
"	-016Z	"	"	"	"	"	"	"	"	"	"	"	"	"	"	"	"	"	"	"	"	"	"	"	SP
	Flange C																								
"	-017Z	"	"	"	"	"	"	"	"	"	"	"	"	"	"	"	"	"	"	"	"	"	"	"	L
"	-018Z	"	"	"	"	"	"	"	"	"	"	"	"	"	"	"	"	"	"	"	"	"	"	"	SP
	M39016/12 2/																								
"	-040Z 3/	104-6	"	9	1.0	.2	"	.1	.1	"	"	"	"	"	"	"	.1	"	"	"	"	"	"	"	.187
"	-046Z 4/	"	"	"	"	"	"	"	"	"	"	"	"	"	"	"	"	"	"	"	"	"	"	"	.187
"	-052Z 3/	"	"	"	"	"	"	"	"	"	"	"	"	"	"	"	"	"	"	"	"	"	"	"	.500
"	-058Z 4/	"	"	"	"	"	"	"	"	"	"	"	"	"	"	"	"	"	"	"	"	"	"	"	.500
	M39016/32 2/																								
	Bracket																								
"	-008Z	104-5	"	6	2.0	.8	"	"	.15	.1	"	"	"	"	"	"	.15	.1	"	"	"	"	"	"	L
	Flange																								
"	-009Z	"	"	"	"	"	"	"	"	"	"	"	"	"	"	"	"	"	"	"	"	"	"	"	L
"	-010Z	"	"	"	"	"	"	"	"	"	"	"	"	"	"	"	"	"	"	"	"	"	"	"	SP
	No mount																								
"	-011Z	"	"	"	"	"	"	"	"	"	"	"	"	"	"	"	"	"	"	"	"	"	"	"	L
"	-012Z	"	"	"	"	"	"	"	"	"	"	"	"	"	"	"	"	"	"	"	"	"	"	"	SP

See footnotes at end of table.

Downloaded from http://www.everyspec.com

TABLE 104.I. Relays, EM, ER, latching, dc operated, part numbers and characteristics - Continued.

Rated coil voltage	Part number 1/	Figure number	Shock (see table II)	Vibration (see table III)	System voltage and frequency - contact current in amperes: 28 V dc Resistive	28 V dc Inductive	28 V dc Motor	28 V dc Lamp	400 Hz 115 V 1-phase Resistive	400 Hz 115 V 1-phase Inductive	400 Hz 115 V 1-phase Motor	400 Hz 115 V 1-phase Lamp	400 Hz 115/200 V 3-phase Resistive	400 Hz 115/200 V 3-phase Inductive	400 Hz 115/200 V 3-phase Motor	400 Hz 115/200 V 3-phase Lamp	50/60 Hz 115 V 1-phase Resistive	50/60 Hz 115 V 1-phase Inductive	50/60 Hz 115 V 1-phase Motor	50/60 Hz 115 V 1-phase Lamp	50/60 Hz 115/200 V 3-phase Resistive	50/60 Hz 115/200 V 3-phase Inductive	50/60 Hz 115/200 V 3-phase Motor	50/60 Hz 115/200 V 3-phase Lamp	Terminal style (see table IV)
DPDT CONTACTS - 2 FORM C, LATCHING - Continued																									
	M39016/12 2/																								
18.0	-041Z 3/	104-6	3	9	1.0	.2	---	.1	.1	---	---	---	---	---	---	---	.1	---	---	---	---	---	---	---	.187
"	-047Z 4/	"	"	"	"	"	"	"	"	"	"	"	"	"	"	"	"	"	"	"	"	"	"	"	.187
"	-053Z 3/	"	"	"	"	"	"	"	"	"	"	"	"	"	"	"	"	"	"	"	"	"	"	"	.500
"	-059Z 4/	"	"	"	"	"	"	"	"	"	"	"	"	"	"	"	"	"	"	"	"	"	"	"	.500
	M39016/12 2/																								
26.5	-042Z 3/	"	"	"	"	"	"	"	"	"	"	"	"	"	"	"	"	"	"	"	"	"	"	"	.187
"	-048Z 4/	"	"	"	"	"	"	"	"	"	"	"	"	"	"	"	"	"	"	"	"	"	"	"	.500
"	-054Z 3/	"	"	"	"	"	"	"	"	"	"	"	"	"	"	"	"	"	"	"	"	"	"	"	.187
"	-060Z 4/	"	"	"	"	"	"	"	"	"	"	"	"	"	"	"	"	"	"	"	"	"	"	"	.500
	M39016/32 2/																								
	Bracket																								
"	-002Z	104-5	"	6	2.0	.8	"	"	.15	.1	"	"	"	"	"	"	.15	.1	"	"	"	"	"	"	L
	Flange																								
"	-003Z	"	"	"	"	"	"	"	"	"	"	"	"	"	"	"	"	"	"	"	"	"	"	"	L
"	-004Z	"	"	"	"	"	"	"	"	"	"	"	"	"	"	"	"	"	"	"	"	"	"	"	SP
	No mount																								
"	-005Z	"	"	"	"	"	"	"	"	"	"	"	"	"	"	"	"	"	"	"	"	"	"	"	L
"	-006Z	"	"	"	"	"	"	"	"	"	"	"	"	"	"	"	"	"	"	"	"	"	"	"	SP
	M39016/45 2/																								
	No mount																								
"	-019Z	104-4	"	5/	"	.75	"	.16	"	---	"	"	.15	"	"	"	"	---	"	"	.15	"	"	"	L
"	-020Z	"	"	"	"	"	"	"	"	"	"	"	"	"	"	"	"	"	"	"	"	"	"	"	SP
	Flange B																								
"	-021Z	"	"	"	"	"	"	"	"	"	"	"	"	"	"	"	"	"	"	"	"	"	"	"	L
"	-022Z	"	"	"	"	"	"	"	"	"	"	"	"	"	"	"	"	"	"	"	"	"	"	"	SP
	Flange C																								
"	-023Z	"	"	"	"	"	"	"	"	"	"	"	"	"	"	"	"	"	"	"	"	"	"	"	L
"	-024Z	"	"	"	"	"	"	"	"	"	"	"	"	"	"	"	"	"	"	"	"	"	"	"	SP

See footnotes at end of table.

Downloaded from http://www.everyspec.com

TABLE 104.I. Relays, EM, ER, latching, dc operated, part numbers and characteristics - Continued.

Rated coil voltage	Part number 1/	Figure number	Shock (see table II)	Vibration (see table III)	System voltage and frequency - contact current in amperes: 28 V dc Resistive	28 V dc Inductive	28 V dc Motor	28 V dc Lamp	400 Hz 115 V 1-phase Resistive	400 Hz 115 V 1-phase Inductive	400 Hz 115 V 1-phase Motor	400 Hz 115 V 1-phase Lamp	400 Hz 115/200 V 3-phase Resistive	400 Hz 115/200 V 3-phase Inductive	400 Hz 115/200 V 3-phase Motor	400 Hz 115/200 V 3-phase Lamp	50/60 Hz 115 V 1-phase Resistive	50/60 Hz 115 V 1-phase Inductive	50/60 Hz 115 V 1-phase Motor	50/60 Hz 115 V 1-phase Lamp	50/60 Hz 115/200 V 3-phase Resistive	50/60 Hz 115/200 V 3-phase Inductive	50/60 Hz 115/200 V 3-phase Motor	50/60 Hz 115/200 V 3-phase Lamp	Terminal style (see table IV)
DPDT CONTACTS - 2 FORM C, LATCHING - Continued																									
	M39016/45 2/																								
	No mount																								
48.0	-025Z	104-4	3	5/	2.0	.75	---	---	.15	---	---	---	---	---	---	---	.15	---	---	---	---	---	---	---	L
"	-026Z	"	"	"	"	"	"	"	"	"	"	"	"	"	"	"	"	"	"	"	"	"	"	"	SP
	Flange B																								
"	-027Z	"	"	"	"	"	"	"	"	"	"	"	"	"	"	"	"	"	"	"	"	"	"	"	L
"	-028Z	"	"	"	"	"	"	"	"	"	"	"	"	"	"	"	"	"	"	"	"	"	"	"	SP
	Flange C																								
"	-029Z	"	"	"	"	"	"	"	"	"	"	"	"	"	"	"	"	"	"	"	"	"	"	"	L
"	-030Z	"	"	"	"	"	"	"	"	"	"	"	"	"	"	"	"	"	"	"	"	"	"	"	SP
DPDT CONTACTS - 2 FORM C, LATCHING, WITH DIODE COIL TRANSIENT SUPPRESSION																									
	M39016/29 2/																								
5.0	-042Z 3/	104-7	3	9	1.0	.2	---	.1	.1	---	---	---	---	---	---	---	.1	---	---	---	---	---	---	---	.187
"	-043Z 4/	"	"	"	"	"	"	"	"	"	"	"	"	"	"	"	"	"	"	"	"	"	"	"	.187
"	-054Z 3/	"	"	"	"	"	"	"	"	"	"	"	"	"	"	"	"	"	"	"	"	"	"	"	.500
"	-055Z 4/	"	"	"	"	"	"	"	"	"	"	"	"	"	"	"	"	"	"	"	"	"	"	"	.500
	M39016/29 2/																								
6.0	-037Z 3/	"	"	"	"	"	"	"	"	"	"	"	"	"	"	"	"	"	"	"	"	"	"	"	.187
"	-044Z 4/	"	"	"	"	"	"	"	"	"	"	"	"	"	"	"	"	"	"	"	"	"	"	"	.187
"	-049Z 3/	"	"	"	"	"	"	"	"	"	"	"	"	"	"	"	"	"	"	"	"	"	"	"	.500
"	-056Z 4/	"	"	"	"	"	"	"	"	"	"	"	"	"	"	"	"	"	"	"	"	"	"	"	.500
	M39016/29 2/																								
9.0	-038Z 3/	"	"	"	"	"	"	"	"	"	"	"	"	"	"	"	"	"	"	"	"	"	"	"	.187
"	-045Z 4/	"	"	"	"	"	"	"	"	"	"	"	"	"	"	"	"	"	"	"	"	"	"	"	.187
"	-050Z 3/	"	"	"	"	"	"	"	"	"	"	"	"	"	"	"	"	"	"	"	"	"	"	"	.500
"	-057Z 4/	"	"	"	"	"	"	"	"	"	"	"	"	"	"	"	"	"	"	"	"	"	"	"	.500
	M39016/29 2/																								
12.0	-039Z 3/	"	"	"	"	"	"	"	"	"	"	"	"	"	"	"	"	"	"	"	"	"	"	"	.187
"	-046Z 4/	"	"	"	"	"	"	"	"	"	"	"	"	"	"	"	"	"	"	"	"	"	"	"	.187
"	-051Z 3/	"	"	"	"	"	"	"	"	"	"	"	"	"	"	"	"	"	"	"	"	"	"	"	.500
"	-058Z 4/	"	"	"	"	"	"	"	"	"	"	"	"	"	"	"	"	"	"	"	"	"	"	"	.500

See footnotes at end of table.

Downloaded from http://www.everyspec.com

TABLE 104.I. Relays, EM, ER, latching, dc operated, part numbers and characteristics - Continued.

Rated coil voltage	Part number 1/	Figure number	Shock (see table II)	Vibration (see table III)	System voltage and frequency - contact current in amperes: 28 V dc Resistive	28 V dc Inductive	28 V dc Motor	28 V dc Lamp	400 Hz 115 V 1-phase Resistive	400 Hz 115 V 1-phase Inductive	400 Hz 115 V 1-phase Motor	400 Hz 115 V 1-phase Lamp	400 Hz 115/200 V 3-phase Resistive	400 Hz 115/200 V 3-phase Inductive	400 Hz 115/200 V 3-phase Motor	400 Hz 115/200 V 3-phase Lamp	50/60 Hz 115 V 1-phase Resistive	50/60 Hz 115 V 1-phase Inductive	50/60 Hz 115 V 1-phase Motor	50/60 Hz 115 V 1-phase Lamp	50/60 Hz 115/200 V 3-phase Resistive	50/60 Hz 115/200 V 3-phase Inductive	50/60 Hz 115/200 V 3-phase Motor	50/60 Hz 115/200 V 3-phase Lamp	Terminal style (see table IV)
DPDT CONTACTS - 2 FORM C, LATCHING, WITH DIODE COIL TRANSIENT SUPPRESSION - Continued																									
	M39016/29 2/																								
18.0	-040Z 3/	104-7	3	9	1.0	.2	---	.1	.1	---	---	---	---	---	---	---	.1	---	---	---	---	---	---	---	.187
"	-047Z 4/	"	"	"	"	"	"	"	"	"	"	"	"	"	"	"	"	"	"	"	"	"	"	"	.187
"	-052Z 3/	"	"	"	"	"	"	"	"	"	"	"	"	"	"	"	"	"	"	"	"	"	"	"	.500
"	-059Z 4/	"	"	"	"	"	"	"	"	"	"	"	"	"	"	"	"	"	"	"	"	"	"	"	.500
	M39016/29 2/																								
26.5	-041Z 3/	"	"	"	"	"	"	"	"	"	"	"	"	"	"	"	"	"	"	"	"	"	"	"	.187
"	-048Z 4/	"	"	"	"	"	"	"	"	"	"	"	"	"	"	"	"	"	"	"	"	"	"	"	.187
"	-053Z 3/	"	"	"	"	"	"	"	"	"	"	"	"	"	"	"	"	"	"	"	"	"	"	"	.500
"	-060Z 4/	"	"	"	"	"	"	"	"	"	"	"	"	"	"	"	"	"	"	"	"	"	"	"	.500
DPDT CONTACTS - 2 FORM C, LATCHING, WITH DIODE COIL TRANSIENT SUPPRESSION AND POLARITY REVERSAL PROTECTION																									
	M39016/30 2/																								
5.0	-042Z 3/	104-8	3	9	1.0	.2	---	.1	.1	---	---	---	---	---	---	---	.1	---	---	---	---	---	---	---	.187
"	-043Z 4/	"	"	"	"	"	"	"	"	"	"	"	"	"	"	"	"	"	"	"	"	"	"	"	.187
"	-054Z 3/	"	"	"	"	"	"	"	"	"	"	"	"	"	"	"	"	"	"	"	"	"	"	"	.500
"	-055Z 4/	"	"	"	"	"	"	"	"	"	"	"	"	"	"	"	"	"	"	"	"	"	"	"	.500
	M39016/30 2/																								
6.0	-037Z 3/	"	"	"	"	"	"	"	"	"	"	"	"	"	"	"	"	"	"	"	"	"	"	"	.187
"	-044Z 4/	"	"	"	"	"	"	"	"	"	"	"	"	"	"	"	"	"	"	"	"	"	"	"	.187
"	-049Z 3/	"	"	"	"	"	"	"	"	"	"	"	"	"	"	"	"	"	"	"	"	"	"	"	.500
"	-056Z 4/	"	"	"	"	"	"	"	"	"	"	"	"	"	"	"	"	"	"	"	"	"	"	"	.500
	M39016/30 2/																								
9.0	-038Z 3/	"	"	"	"	"	"	"	"	"	"	"	"	"	"	"	"	"	"	"	"	"	"	"	.187
"	-045Z 4/	"	"	"	"	"	"	"	"	"	"	"	"	"	"	"	"	"	"	"	"	"	"	"	.187
"	-050Z 3/	"	"	"	"	"	"	"	"	"	"	"	"	"	"	"	"	"	"	"	"	"	"	"	.500
"	-057Z 4/	"	"	"	"	"	"	"	"	"	"	"	"	"	"	"	"	"	"	"	"	"	"	"	.500
	M39016/30 2/																								
12.0	-039Z 3/	"	"	"	"	"	"	"	"	"	"	"	"	"	"	"	"	"	"	"	"	"	"	"	.187
"	-046Z 4/	"	"	"	"	"	"	"	"	"	"	"	"	"	"	"	"	"	"	"	"	"	"	"	.187
"	-051Z 3/	"	"	"	"	"	"	"	"	"	"	"	"	"	"	"	"	"	"	"	"	"	"	"	.500
"	-058Z 4/	"	"	"	"	"	"	"	"	"	"	"	"	"	"	"	"	"	"	"	"	"	"	"	.500
	M39016/30 2/																								
18.0	-040Z 3/	"	"	"	"	"	"	"	"	"	"	"	"	"	"	"	"	"	"	"	"	"	"	"	.187
"	-047Z 4/	"	"	"	"	"	"	"	"	"	"	"	"	"	"	"	"	"	"	"	"	"	"	"	.187
"	-052Z 3/	"	"	"	"	"	"	"	"	"	"	"	"	"	"	"	"	"	"	"	"	"	"	"	.500
"	-059Z 4/	"	"	"	"	"	"	"	"	"	"	"	"	"	"	"	"	"	"	"	"	"	"	"	.500

See footnotes at end of table.

Downloaded from http://www.everyspec.com

TABLE 104.I. Relays, EM, ER, latching, dc operated, part numbers and characteristics - Continued.

Rated coil voltage	Part number 1/	Figure number	Shock (see table II)	Vibration (see table III)	System voltage and frequency - contact current in amperes: 28 V dc Resistive	28 V dc Inductive	28 V dc Motor	28 V dc Lamp	400 Hz 115 V 1-phase Resistive	400 Hz 115 V 1-phase Inductive	400 Hz 115 V 1-phase Motor	400 Hz 115 V 1-phase Lamp	400 Hz 115/200 V 3-phase Resistive	400 Hz 115/200 V 3-phase Inductive	400 Hz 115/200 V 3-phase Motor	400 Hz 115/200 V 3-phase Lamp	50/60 Hz 115 V 1-phase Resistive	50/60 Hz 115 V 1-phase Inductive	50/60 Hz 115 V 1-phase Motor	50/60 Hz 115 V 1-phase Lamp	50/60 Hz 115/200 V 3-phase Resistive	50/60 Hz 115/200 V 3-phase Inductive	50/60 Hz 115/200 V 3-phase Motor	50/60 Hz 115/200 V 3-phase Lamp	Terminal style (see table IV)
DPDT CONTACTS - 2 FORM C, LATCHING, WITH DIODE COIL TRANSIENT SUPPRESSION AND POLARITY REVERSAL PROTECTION - Continued																									
	M39016/30 2/																								
26.5	-041Z 3/	104-8	3	9	1.0	.2	---	.1	.1	---	---	---	---	---	---	---	.1	---	---	---	---	---	---	---	.187
"	-048Z 4/	"	"	"	"	"	"	"	"	"	"	"	"	"	"	"	"	"	"	"	"	"	"	"	.187
"	-053Z 3/	"	"	"	"	"	"	"	"	"	"	"	"	"	"	"	"	"	"	"	"	"	"	"	.500
"	-060Z 4/	"	"	"	"	"	"	"	"	"	"	"	"	"	"	"	"	"	"	"	"	"	"	"	.500
4PDT CONTACTS - 4 FORM C																									
	M39016/31 2/																								
6.0	-001Z	104-9	3	9	2.0	.5	---	.1	.125	---	---	---	---	---	---	---	.125	---	---	---	---	---	---	---	SP
6.0	-004Z	"	"	"	"	"	"	"	"	"	"	"	"	"	"	"	"	"	"	"	"	"	"	"	L
	M39016/31 2/																								
12.0	-002Z	"	"	"	"	"	"	"	"	"	"	"	"	"	"	"	"	"	"	"	"	"	"	"	SP
12.0	-005Z	"	"	"	"	"	"	"	"	"	"	"	"	"	"	"	"	"	"	"	"	"	"	"	L
	M39016/31 2/																								
26.5	-003Z	"	"	"	"	"	"	"	"	"	"	"	"	"	"	"	"	"	"	"	"	"	"	"	SP
26.5	-006Z	"	"	"	"	"	"	"	"	"	"	"	"	"	"	"	"	"	"	"	"	"	"	"	L
4PDT CONTACTS - 4 FORM C, LATCHING, WITH DIODE COIL TRANSIENT SUPPRESSION																									
	M39016/35 2/																								
6.0	-001Z	104-10	3	9	2.0	.5	---	.1	.125	---	---	---	---	---	---	---	.125	---	---	---	---	---	---	---	SP
6.0	-004Z	"	"	"	"	"	"	"	"	"	"	"	"	"	"	"	"	"	"	"	"	"	"	"	L
	M39016/35 2/																								
12.0	-002Z	"	"	"	"	"	"	"	"	"	"	"	"	"	"	"	"	"	"	"	"	"	"	"	SP
12.0	-005Z	"	"	"	"	"	"	"	"	"	"	"	"	"	"	"	"	"	"	"	"	"	"	"	L
	M39016/35 2/																								
26.5	-003Z	"	"	"	"	"	"	"	"	"	"	"	"	"	"	"	"	"	"	"	"	"	"	"	SP
26.5	-006Z	"	"	"	"	"	"	"	"	"	"	"	"	"	"	"	"	"	"	"	"	"	"	"	L

See footnotes at end of table.

Downloaded from http://www.everyspec.com

TABLE 104.I. Relays, EM, ER, latching, dc operated, part numbers and characteristics - Continued.

Rated coil voltage	Part number 1/	Figure number	Shock (see table II)	Vibration (see table III)	System voltage and frequency - contact current in amperes																				Terminal style (see table IV)
					28 V dc				400 Hz								50/60 Hz								
									115 V 1-phase				115/200 V 3-phase				115 V 1-phase				115/200 V 3-phase				
					Resis-tive	Induc-tive	Motor	Lamp	Resis-tive	Induc-tive	Motor	Lamp	Resis-tive	Induc-tive	Motor	Lamp	Resis-tive	Induc-tive	Motor	Lamp	Resis-tive	Induc-tive	Motor	Lamp	
4PDT CONTACTS - 4 FORM C, LATCHING, WITH DIODE COIL TRANSIENT SUPPRESSION AND POLARITY REVERSAL PROTECTION																									
6.0	M39016/36 2/	104-11	3	9	2.0	.5	---	.1	.125	---	---	---	---	---	---	---	.125	---	---	---	---	---	---	---	SP
6.0	-001Z	"	"	"	"	"	"	"	"	"	"	"	"	"	"	"	"	"	"	"	"	"	"	"	L
6.0	-004Z	"	"	"	"	"	"	"	"	"	"	"	"	"	"	"	"	"	"	"	"	"	"	"	
12.0	M39016/36 2/	"	"	"	"	"	"	"	"	"	"	"	"	"	"	"	"	"	"	"	"	"	"	"	SP
12.0	-002Z	"	"	"	"	"	"	"	"	"	"	"	"	"	"	"	"	"	"	"	"	"	"	"	L
12.0	-005Z	"	"	"	"	"	"	"	"	"	"	"	"	"	"	"	"	"	"	"	"	"	"	"	
26.5	M39016/36 2/	"	"	"	"	"	"	"	"	"	"	"	"	"	"	"	"	"	"	"	"	"	"	"	SP
26.5	-003Z	"	"	"	"	"	"	"	"	"	"	"	"	"	"	"	"	"	"	"	"	"	"	"	L
26.5	-006Z	"	"	"	"	"	"	"	"	"	"	"	"	"	"	"	"	"	"	"	"	"	"	"	

1/ The symbol "Z" is used to indicate that a failure rate symbol is required. See table V and the latest qualified products list (QPL) of the specification being used.

2/ Each relay possesses high level and low level capabilities. However, relays previously tested or used above 10 mA resistive at 6 V dc maximum or peak ac open circuits not recommended for subsequent use in low level applications. Low level rating is 10-50 microamperes at 10-50 millivolts.

3/ Nine pins or 9 wires and a center-tapped (negative common) coil.

4/ Ten pins or 10 wires and two separate coils (separate negatives).

5/ See specification sheet.

Downloaded from http://www.everyspec.com

Downloaded from http://www.everyspec.com

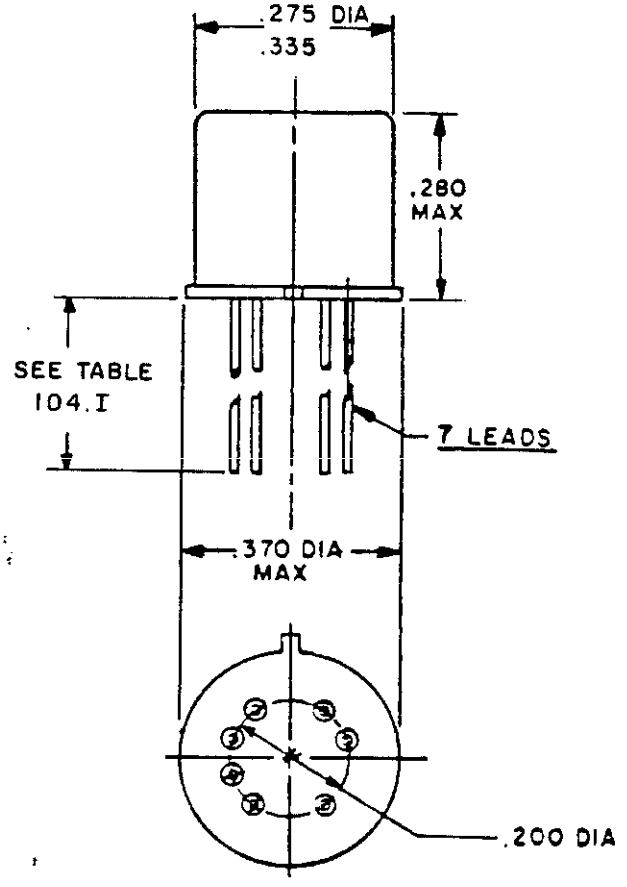

INCHES	MM
.200	5.08
.275	6.99
.280	7.11
.335	8.51
.370	9.39

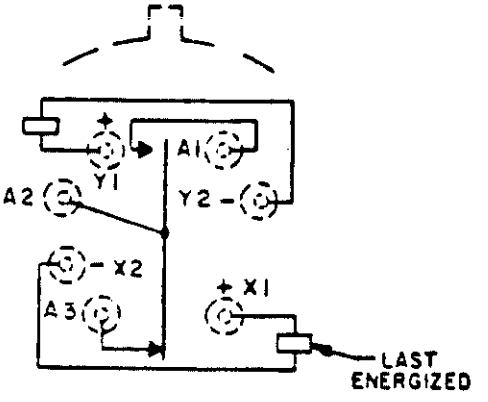

CIRCUIT DIAGRAM
TERMINAL VIEW

FIGURE 104-1. Relay, EM, ER, SPDT, low level to 0.5 ampere (latching) (MIL-R-39016/8).

Downloaded from http://www.everyspec.com

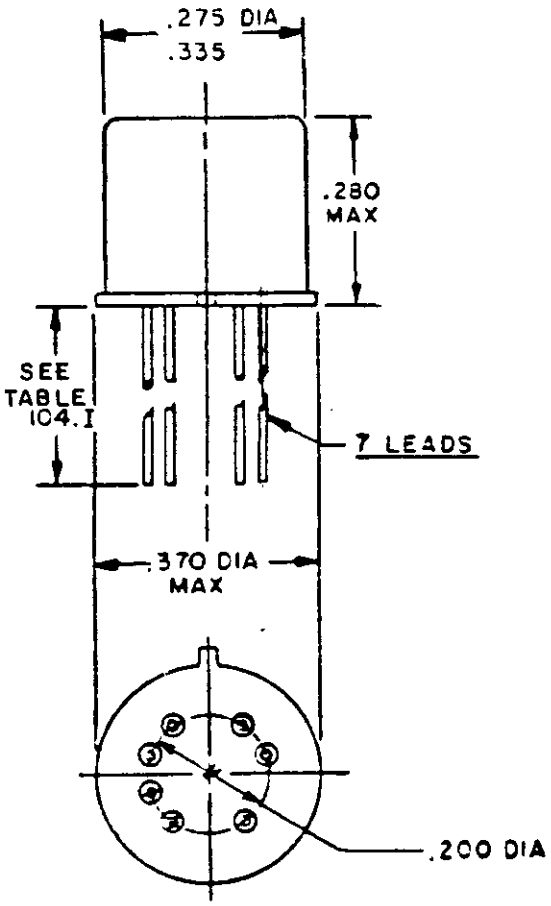

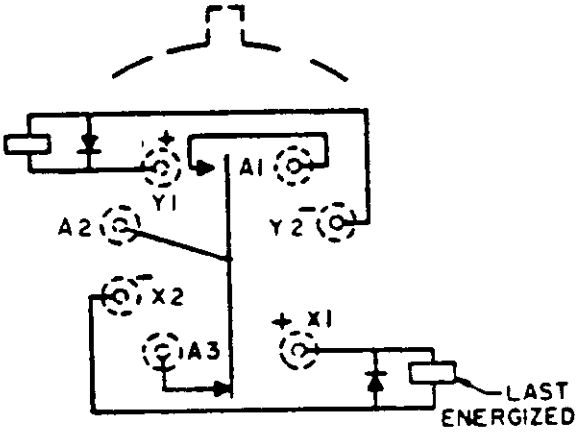

CIRCUIT DIAGRAM
TERMINAL VIEW

INCHES	MM
.200	5.08
.275	6.99
.280	7.11
.335	8.51
.370	9.39

FIGURE 104-2. Relay, EM, ER, SPDT, low level to 0.5 ampere (latching) with internal diodes for coil transient suppression (MIL-R-39016/27).

Downloaded from http://www.everyspec.com

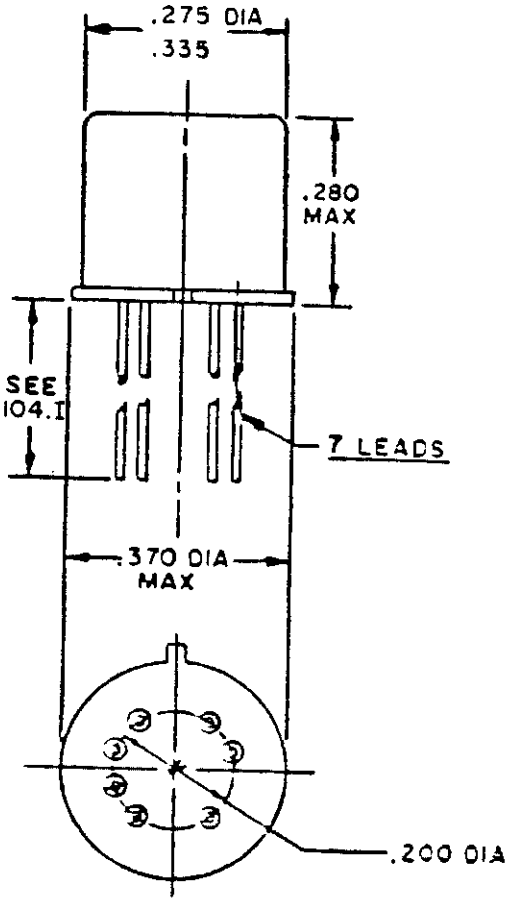

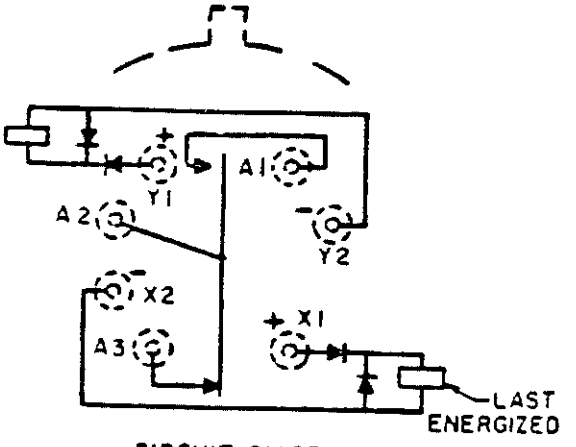

CIRCUIT DIAGRAM
TERMINAL VIEW

INCHES	MM
.200	5.08
.275	6.99
.280	7.11
.335	8.51
.370	9.39

FIGURE 104-3. Relay, EM, ER, SPDT, low level to 0.5 ampere (latching) with internal diodes for coil transient suppression and polarity reversal protection (MIL-R-39016/28).

Downloaded from http://www.everyspec.com

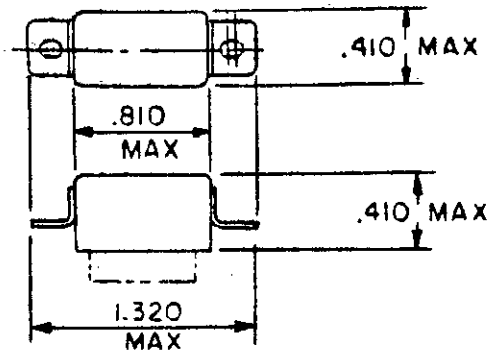

FLANGE MOUNT B

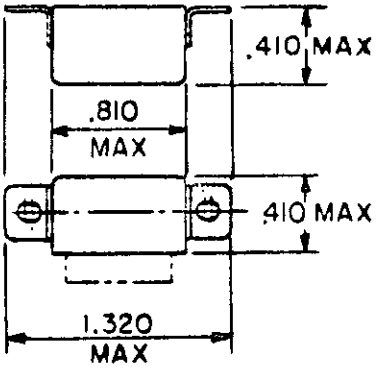

FLANGE MOUNT C

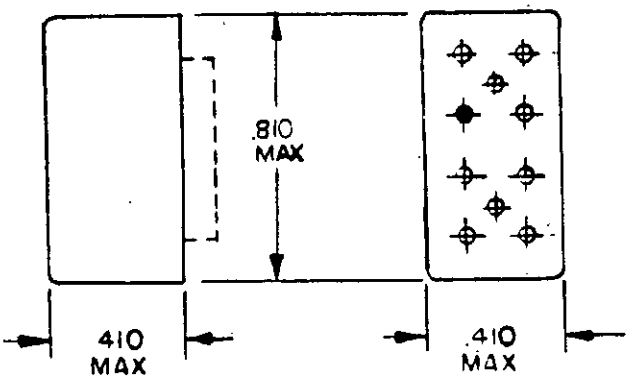

INCHES	MM
.410	10.19
.810	20.35
1.320	33.53

NO MOUNT

FIGURE 104-4. Relay, EM, ER, DPDT, low level to 2 amperes (latching) (MIL-R-39016/45).

Downloaded from http://www.everyspec.com

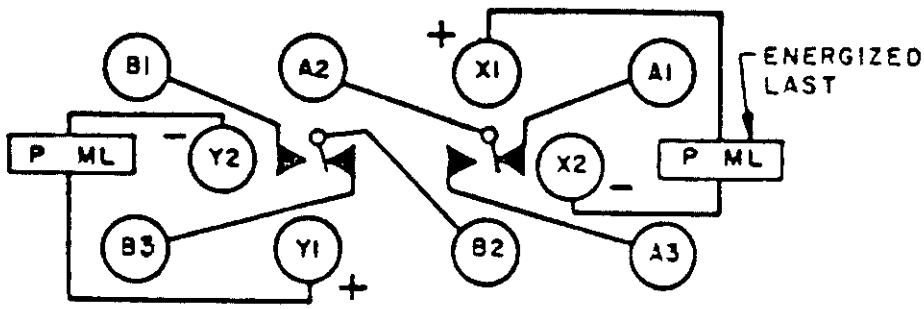

TERMINAL VIEW
CIRCUIT DIAGRAM

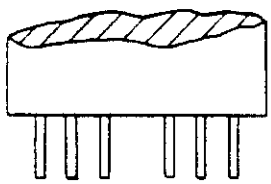

PIN (PC)

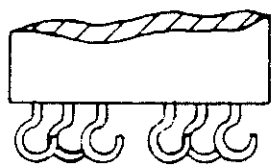

SOLDER LUG

FIGURE 104-4. Relay, EM, ER, DPDT, low level to 2 amperes (latching) (MIL-R-39016/45) - Continued.

Downloaded from http://www.everyspec.com

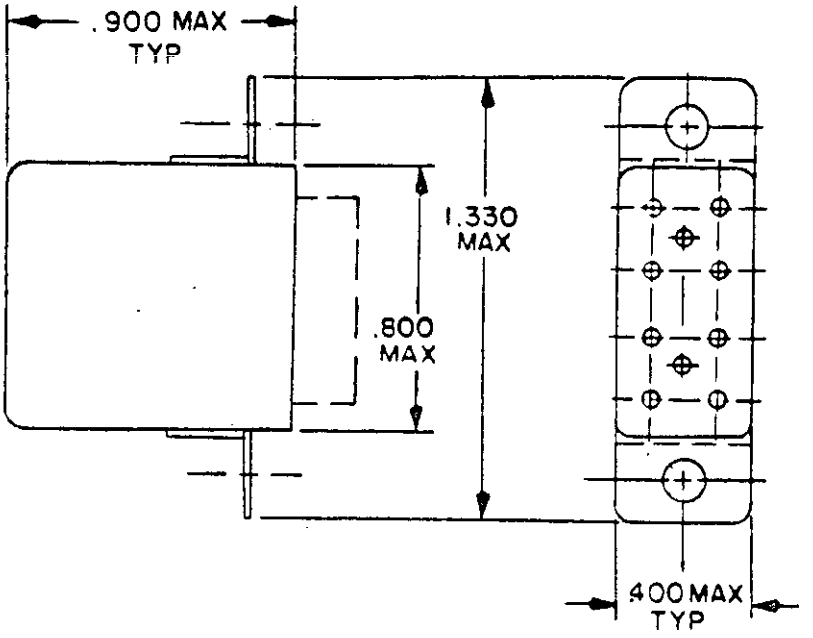

FLANGE MOUNT

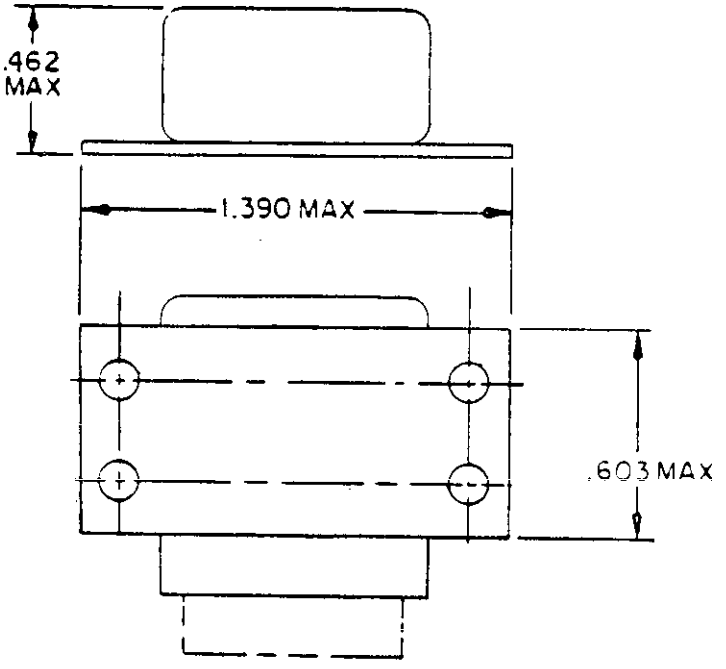

INCHES	MM
.400	10.16
.462	11.73
.603	15.32
.800	20.32
.900	22.86
1.330	33.78
1.390	35.31

BRACKET MOUNT

FIGURE 104-5. Relay, EM, ER, DPDT, low level to 2 amperes (latching) (MIL-R-39016/32).

Downloaded from http://www.everyspec.com

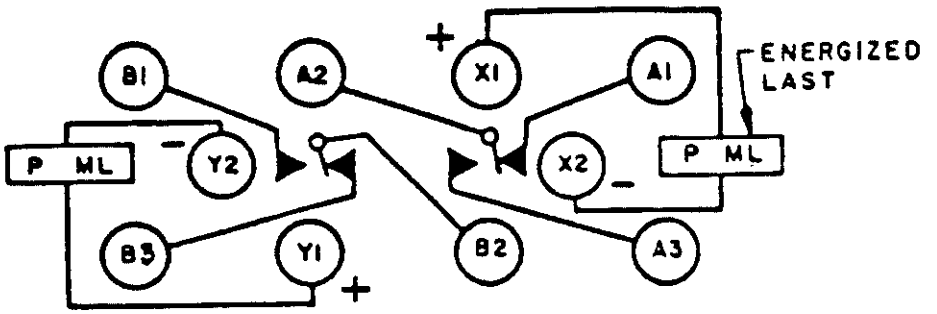

TERMINAL VIEW
CIRCUIT DIAGRAM

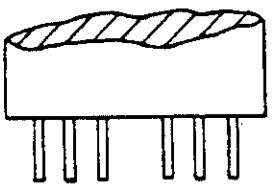

PIN (PC)

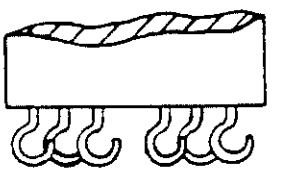

SOLDER LUG

FIGURE 104-5. Relay, EM, ER, DPDT, low level to 2 amperes (latching) (MIL-R-39016/32) - Continued.

Downloaded from http://www.everyspec.com

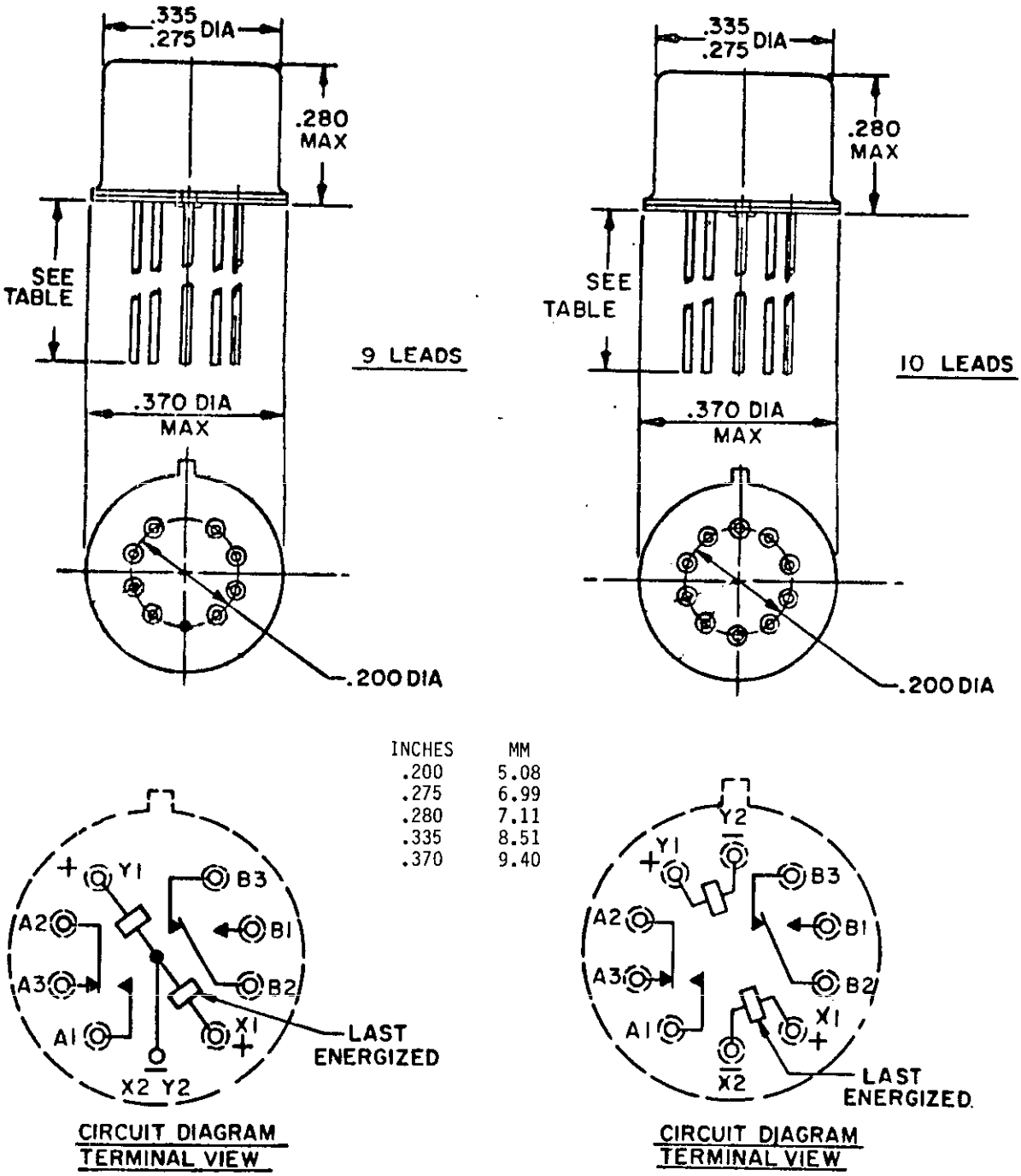

INCHES	MM
.200	5.08
.275	6.99
.280	7.11
.335	8.51
.370	9.40

FIGURE 104-6. Relay, EM, ER, DPDT, low level to 1 ampere (latching) (MIL-R-39016/12).

Downloaded from http://www.everyspec.com

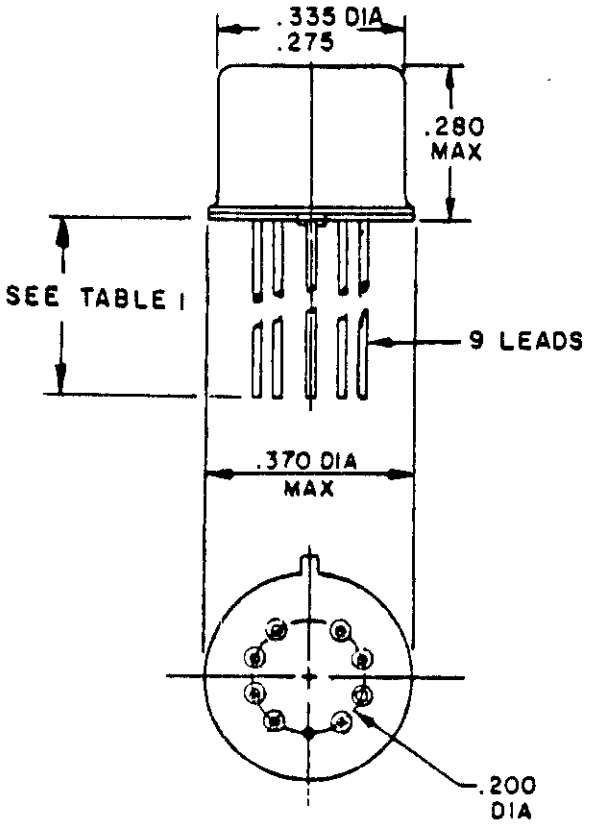

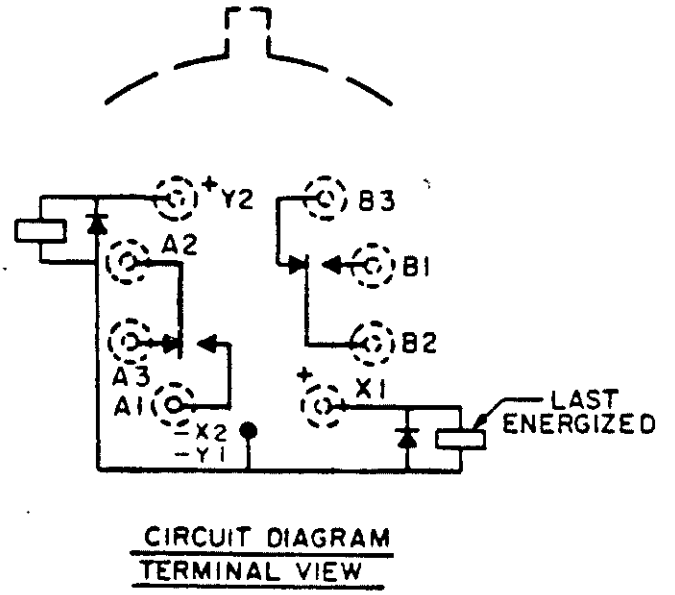

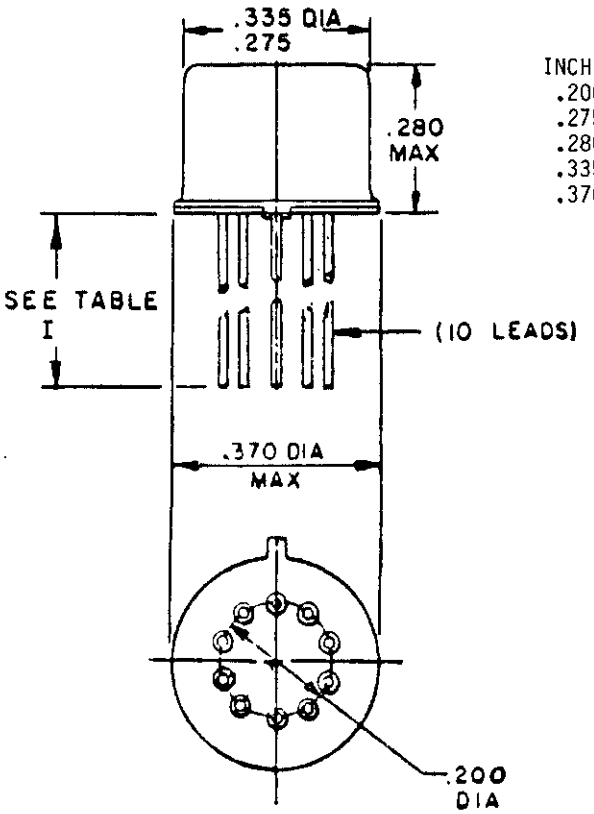

INCHES	MM
.200	5.08
.275	6.99
.280	7.11
.335	8.51
.370	9.40

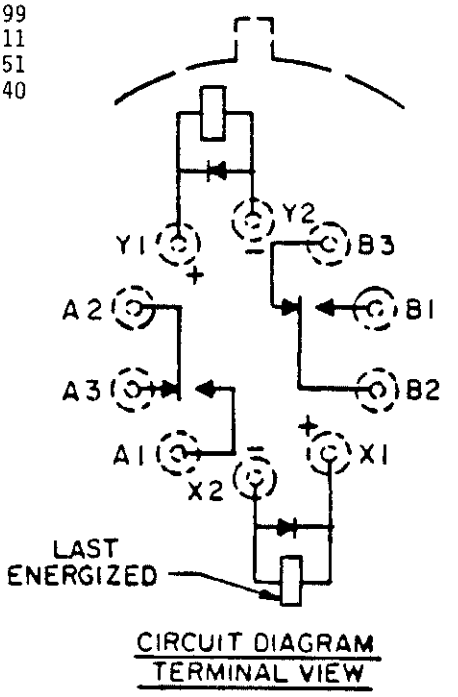

FIGURE 104-7. Relay, EM, ER, DPDT, low level to 1 ampere (latching) with internal diodes for coil transient suppression (MIL-R-39016/29).

Downloaded from http://www.everyspec.com

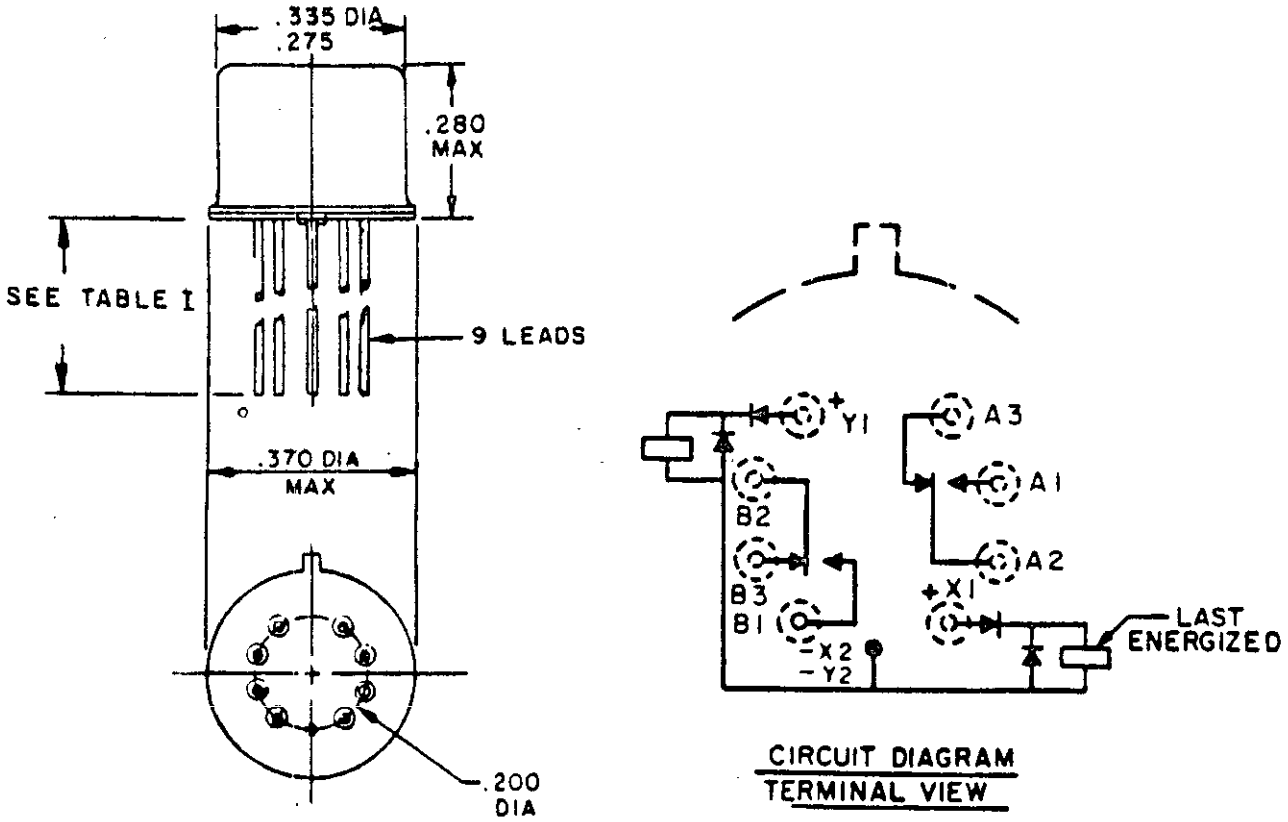

INCHES	MM
.200	5.08
.275	6.99
.280	7.11
.335	8.51
.370	9.40

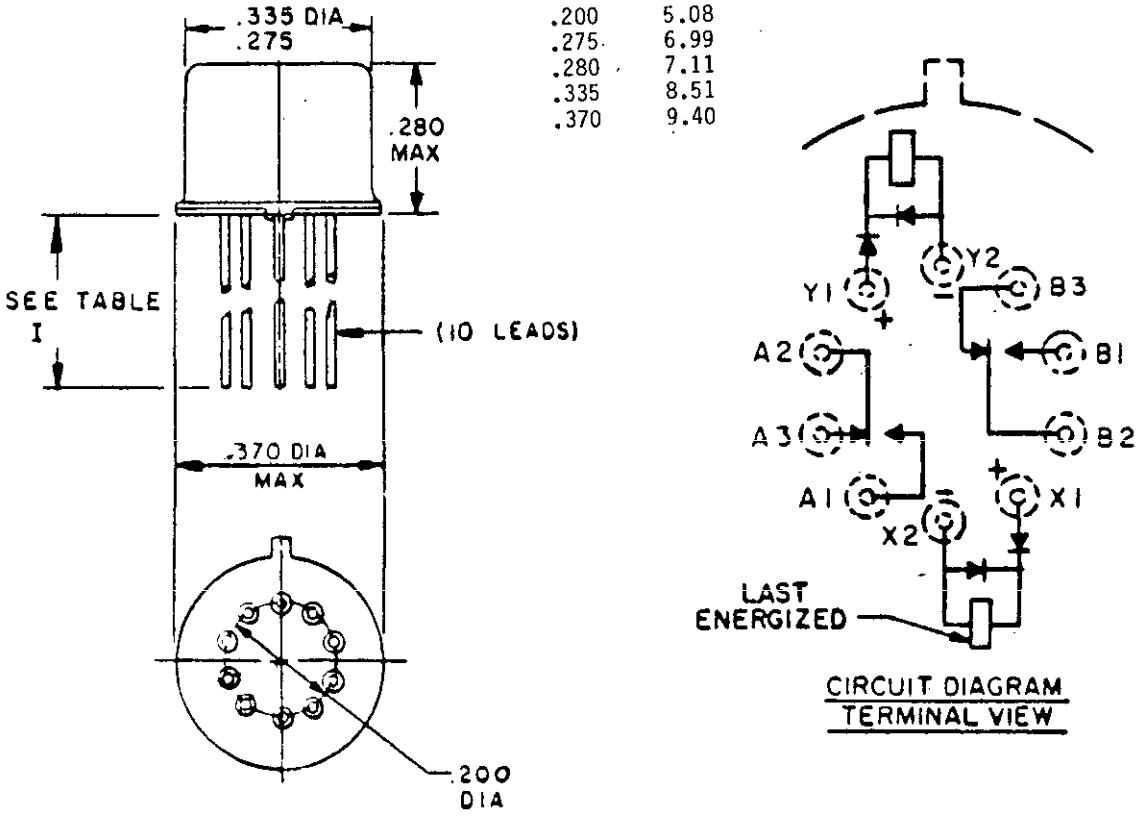

FIGURE 104-8. Relay, EM, ER, DPDT, low level to 1 ampere (latching) with internal diodes for coil transient suppression and polarity reversal protection (MIL-R-39016/30).

Downloaded from http://www.everyspec.com

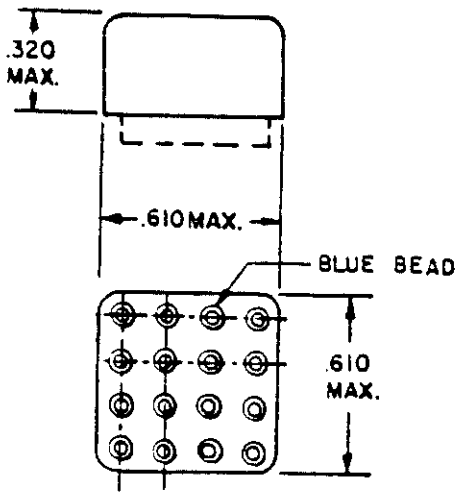

NO MOUNT

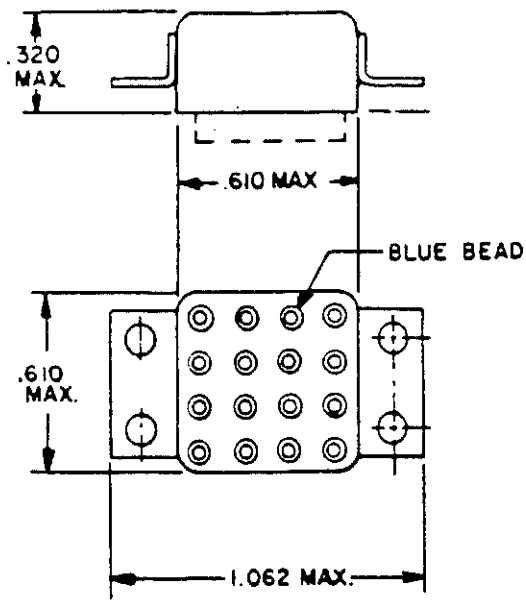

FLANGE MOUNT

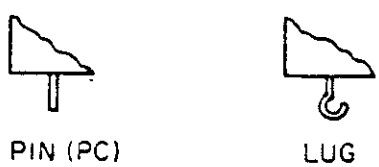

TERMINALS

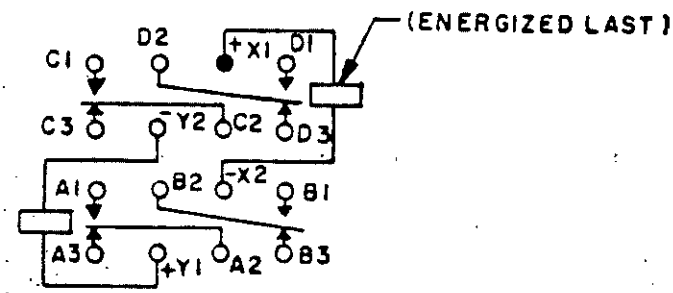

CIRCUIT DIAGRAM
(TERMINAL VIEW)

INCHES	MM
.320	8.13
.610	15.49
1.062	26.97

FIGURE 104-9. Relay, EM, ER, 4PDT, low level to 2 amperes (0.105 inch terminal spacing), (latching) (MIL-R-39016/31).

Downloaded from http://www.everyspec.com

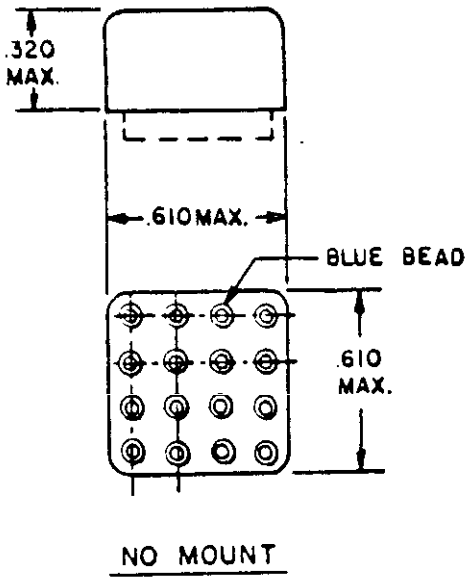

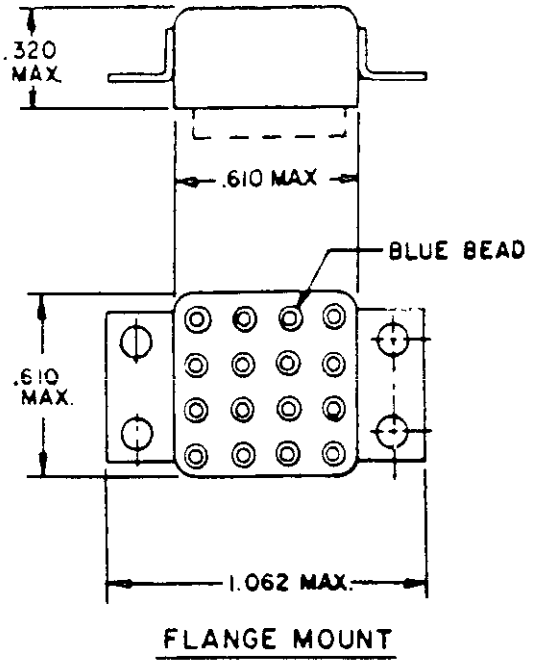

INCHES	MM
.320	8.13
.610	16.49
1.062	26.97

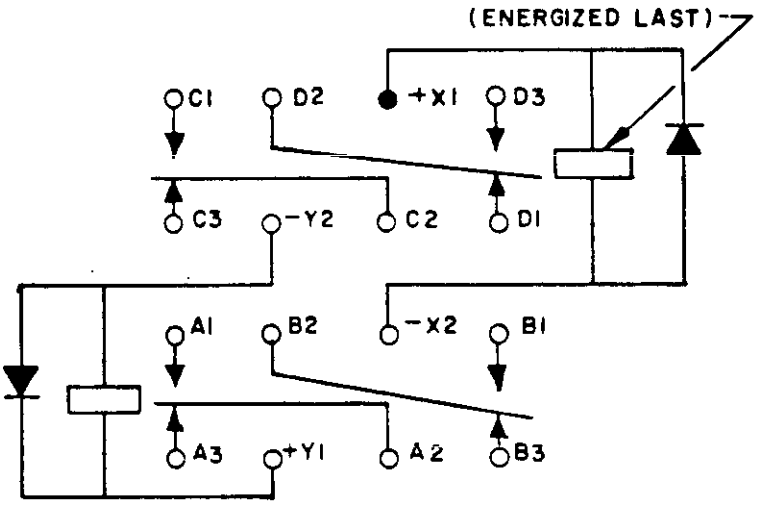

FIGURE 104-10. Relays, EM, ER, 4PDT, low level to 2 amperes (0.150 inch terminal spacing), (latching), with internal diodes for coil transient suppression (MIL-R-39016/35).

Downloaded from http://www.everyspec.com

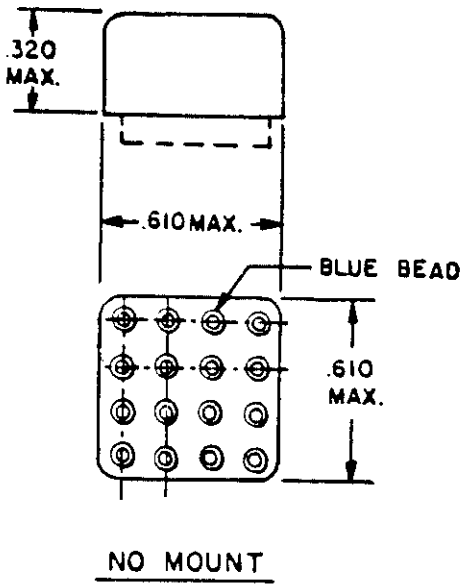

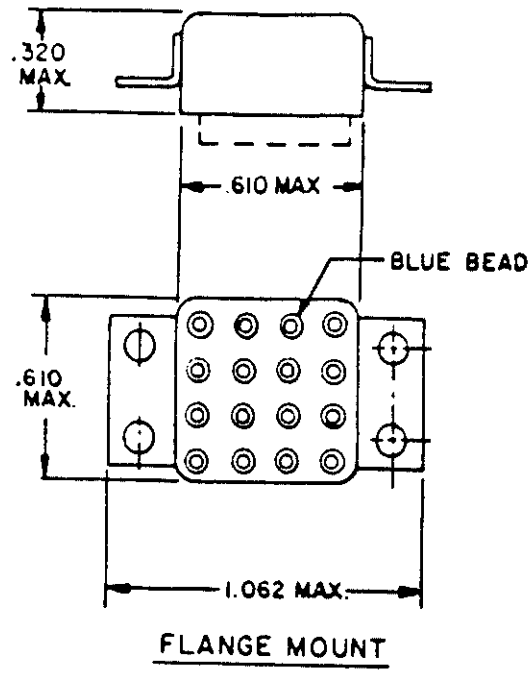

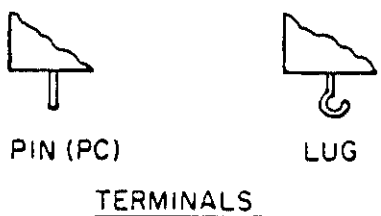

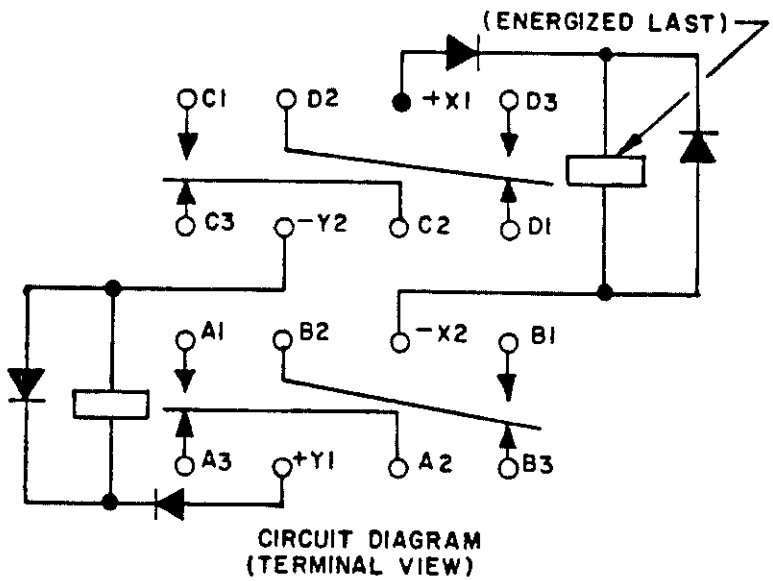

INCHES	MM
.320	8.13
.610	15.49
1.062	26.97

FIGURE 104-11. Relays, EM, ER, 4PDT, low level to 2 amperes (0.150 inch terminal spacing), (latching, with internal diodes for coil transient suppression and reverse polarity protection (MIL-R-39016/36).

Downloaded from http://www.everyspec.com

SUBSECTION 105

RELAYS, ELECTROMAGNETIC (EM), ESTABLISHED RELIABILITY (ER), LATCHING, SENSITIVE, DC OPERATED

(Applicable specification: MIL-R-39016)

SCOPE: This subsection covers relays with coils dc voltage rated. Latching relays maintain their contacts in the last position assumed without the need of maintaining coil energization.

SUBSECTION 105 1/

RELAYS, ELECTROMAGNETIC (EM), ESTABLISHED RELIABILITY (ER), LATCHING, SENSITIVE, DC OPERATED

(Applicable specification: MIL-R-39016)

Duty cycle: Continuous
Enclosure: Hermetically sealed
Operating temperature range: B (see table I)

TABLE 105.I. Relays, EM, ER, latching, sensitive, dc operated, part numbers and characteristics.

Rated coil voltage	Part number 2/	Figure number	Shock (see table II)	Vibration (see table III)	System voltage and frequency - contact current in amperes																				Terminal style (see table IV)
									400 Hz								50/60 Hz								
					28 V dc				115 V 1-phase				115/200 V 3-phase				115 V 1-phase				115/200 V 3-phase				
					Resis-tive	Induc-tive	Motor	Lamp	Resis-tive	Induc-tive	Motor	Lamp	Resis-tive	Induc-tive	Motor	Lamp	Resis-tive	Induc-tive	Motor	Lamp	Resis-tive	Induc-tive	Motor	Lamp	
DPDT CONTACTS - 2 FORM C, LATCHING																									
5.0	M39016/47 3/ -001Z	105-1	3	9	0.5	0.1	---	---	---	---	---	---	---	---	---	---	---	---	---	---	---	---	---	---	SP
12.0	M39016/47 3/ -002Z	105-1	3	9	0.5	0.1	*	*	*	*	*	*	*	*	*	*	*	*	*	*	*	*	*	---	SP
24.0	M39016/47 3/ -003Z	105-1	3	9	0.5	0.1	*	*	*	*	*	*	*	*	*	*	*	*	*	*	*	*	*	*	SP

1/ These relays are not recommended in critical applications or in applications where a less sensitive relay can be used.

2/ The symbol "Z" is used to indicate that a failure rate symbol is required. See table V and the latest qualified products list (QPL) of the specification being used.

3/ Each relay possesses high level and low level capabilities. However, relays previously tested or used above 10 mA resistive at 6 V dc maximum or peak ac open circuits not recommended for subsequent use in low level applications. The low level rating is 10-50 microamperes at 10-50 millivolts.

Downloaded from http://www.everyspec.com

Downloaded from http://www.everyspec.com

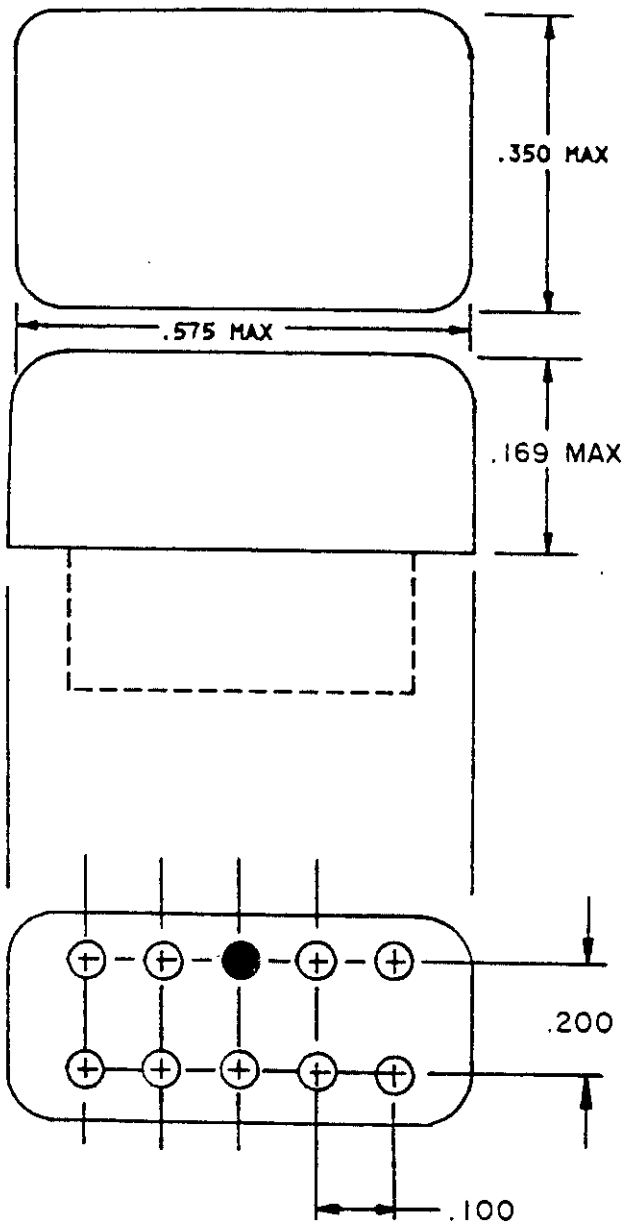

INCHES	MM
.100	2.54
.169	4.29
.200	5.08
.350	8.89
.575	14.61

FIGURE 105-1. Relay, EM, ER, sensitive, DPDT, low level to 2 amperes (latching) (MIL-R-39016/47).

Downloaded from http://www.everyspec.com

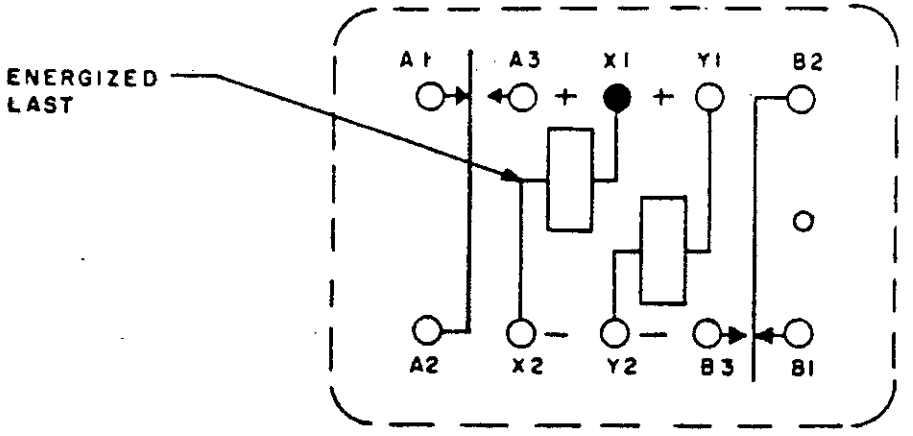

CIRCUIT DIAGRAM

TERMINAL VIEW

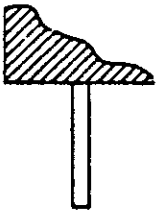

SOLDER PIN - (SP)

FIGURE 105-1. Relay, EM, ER, sensitive DPDT, low level to 2 amperes (latching) (MIL-R-39016/47) - Continued.

Downloaded from http://www.everyspec.com

SUBSECTION 106

RELAYS, ELECTROMAGNETIC (EM), ESTABLISHED RELIABILITY (ER), RADIO FREQUENCY (COAXIAL), DC OPERATED

(Applicable specification: MIL-R-39016)

SCOPE: This subsection covers relays with coils dc voltage rated. Radio frequency rating dc to 1 GHz.

RELAYS, EM, ER, RADIO FREQUENCY (COAXIAL), DC OPERATED

(Applicable specification: MIL-R-39016)

Duty cycle: Continuous
Enclosure: Hermetically sealed
Operating temperature range: B (see table I)

TABLE 106.I. Relays, EM, ER, radio frequency (coaxial), dc operated, part numbers and characteristics.

Rated coil voltage	Part number 1/	Figure number	Shock (see table II)	Vibration (see table III)	System voltage and frequency - contact current in amperes																				Terminal style (see table IV)
									400 Hz								50/60 Hz								
					28 V dc				115 V 1-phase				115/200 V 3-phase				115 V 1-phase				115/200 V 3-phase				
					Resis-tive	Induc-tive	Motor	Lamp	Resis-tive	Induc-tive	Motor	Lamp	Resis-tive	Induc-tive	Motor	Lamp	Resis-tive	Induc-tive	Motor	Lamp	Resis-tive	Induc-tive	Motor	Lamp	
SPDT - RF, SPDT AUX																									
	M39016/33 2/																								
6.0	-006Z	106-1	3	9	RF power handling capability:																				
"	-018Z	"	"	"	80 watts at 100 MHz.																				
"	-024Z	"	"	"	50 watts at 500 MHz.																				
					30 watts at 1,000 MHz.																				
12.0	-004Z	"	"	"	Load rating (all contacts):																				
"	-016Z	"	"	"	High level:																				
"	-022Z	"	"	"	Resistive: 2 amperes at 28 V dc maximum																				
					Inductive: .5 amperes at 28 V dc maximum (200 mH).																				
26.5	-002Z	"	"	"	Lamp: 0.160 ampere at 28 V dc.																				
"	-014Z	"	"	"	Low level:																				
"	-020Z	"	"	"	Resistive: 10 to 50 µA at 10 to 50 mV dc or peak ac.																				
DPDT - RF																									
	M39016/33 2/																								
6.0	-005Z	106-1	3	9	Load ratings, see above.																				
"	-017Z	"	"	"																					
"	-023Z	"	"	"																					
12.0	-003Z	"	"	"																					
"	-015Z	"	"	"																					
"	-021Z	"	"	"																					
26.5	-001Z	"	"	"																					
"	-013Z	"	"	"																					
"	-019Z	"	"	"																					

1/ The symbol "Z" is used to indicate that a failure rate symbol is required. See table V and the latest qualified products list (QPL) of the specification being used.

2/ Each relay possesses high level and low level capabilities. However, relays previously tested of used above 10 mA resistive at 6 V dc maximum or peak ac open circuits not recommended of subsequent use in low level applications.

Downloaded from http://www.everyspec.com

Downloaded from http://www.everyspec.com

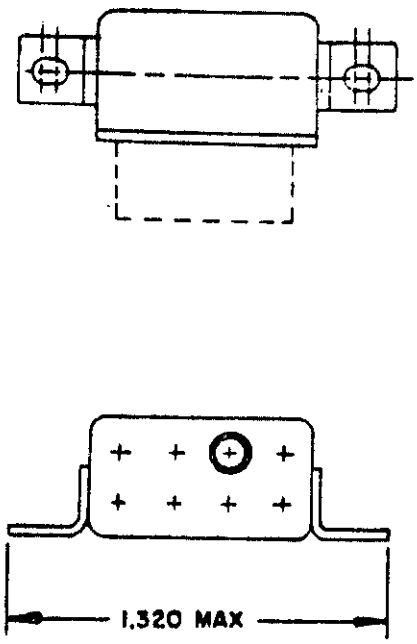

FLANGE MOUNT C

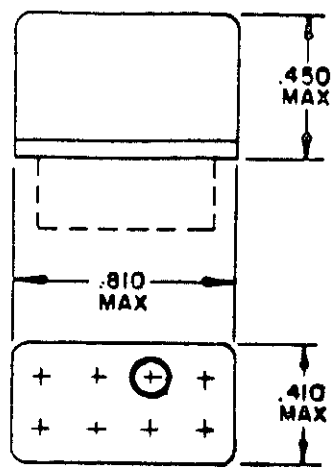

NO MOUNT

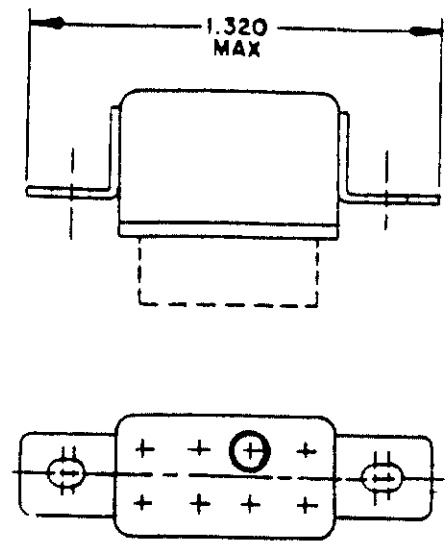

FLANGE MOUNT B

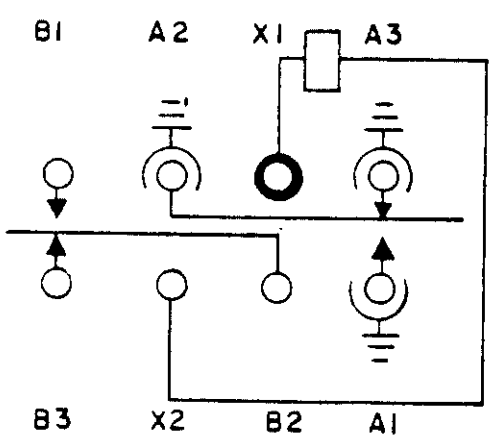

SPDT-RF
SPDT-AUX

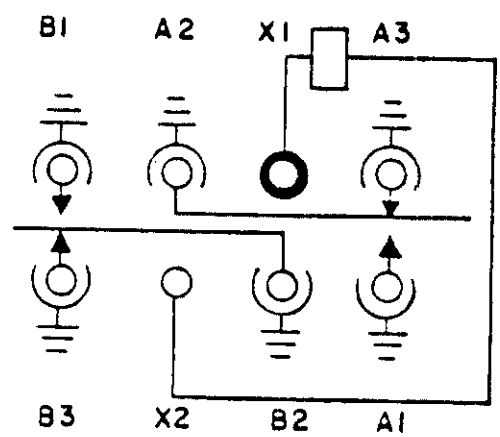

DPDT-RF

CIRCUIT DIAGRAMS

INCHES	MM
.410	10.41
.450	11.43
.810	20.57
1.320	33.53
8.50	215.90

FIGURE 106-1. Relay, EM, ER, radio frequency (coaxial) (MIL-R-39016/33).

Downloaded from http://www.everyspec.com

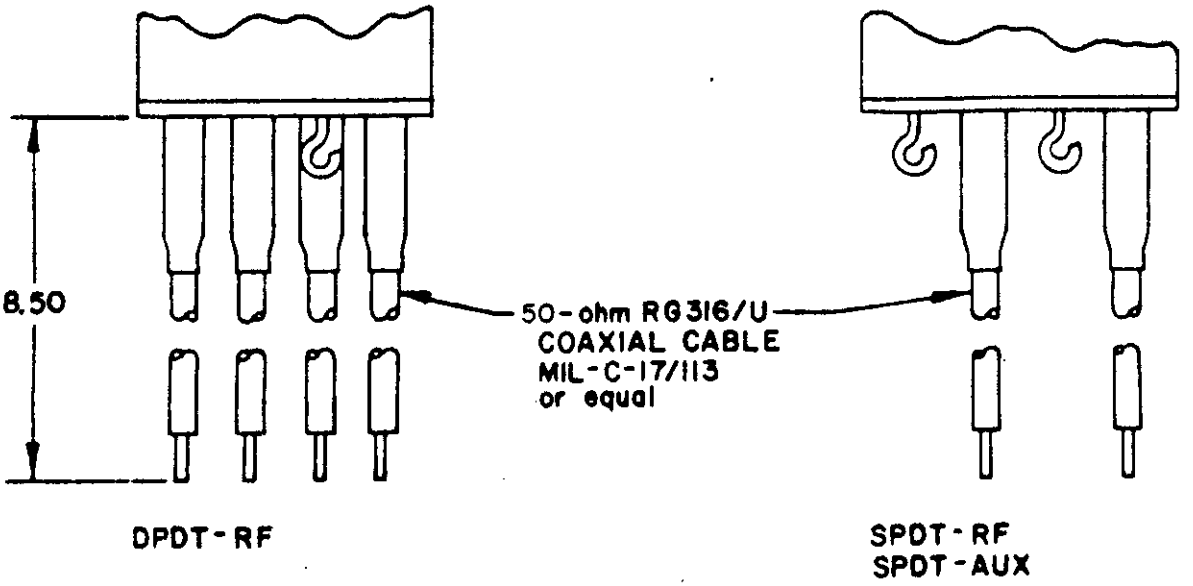

FIGURE 106-1. Relay, EM, ER, radio frequency (coaxial) (MIL-R-39016/33) - Continued.

Downloaded from http://www.everyspec.com

SECTION 200

RELAYS, HYBRID, ESTABLISHED RELIABILITY (ER)

(Applicable specification, MIL-R-28776)

Subsection

201 Relays, Hybrid, ER, dc operated.

202 Relays, Hybrid, ER, dc operated, sensitive.

Downloaded from http://www.everyspec.com

SUBSECTION 201

RELAYS, HYBRID, ESTABLISHED RELIABILITY (ER), DC OPERATED

SCOPE: This subsection covers relays that use a combination of solid state circuit input functioning with an electromechanical relay that performs the switching functions.

SECTION 201

RELAYS, HYBRID, ESTABLISHED RELIABILITY (ER), DC OPERATED

(Applicable specification: MIL-R-28776.

Duty cycle: Continuous
Altitude: 70,000 feet
Enclosure: Hermetically sealed
Operating temperature range: B (see table I).

TABLE 201.1. Relays, hybrid, ER, dc operated, part numbers and characteristics. 1/

Rated supply voltage (V dc)	Part number 2/	Figure number	Shock (see table II)	Vibration (see table III)	System voltage and contact current in amperes 3/ 28 V dc			Maximum base current to assure turn-on (mA)	Terminal style (see table IV)
					Resistive	Inductive	Lamp		
DPDT CONTACTS - 2 FORM C - (TRANSISTOR DRIVEN) (ELECTROMECHANICAL OUTPUT) WITH DIODE COIL SUPPRESSION									
	M28776/1								
5.0	-01SZ	201-1	2	9	1.0	0.2	0.1	.75	.187
5.0	-02SZ	"	"	"	"	"	"	.75	.500
6.0	-02DZ	"	"	"	"	"	"	.55	.187
6.0	-02GZ	"	"	"	"	"	"	.55	.500
9.0	-08JZ	"	"	"	"	"	"	.36	.187
9.0	-08TZ	"	"	"	"	"	"	.36	.500
12.0	-08ZZ	"	"	"	"	"	"	.27	.187
12.0	-02HZ	"	"	"	"	"	"	.27	.500
18.0	-02JZ	"	"	"	"	"	"	.18	.187
18.0	-02PZ	"	"	"	"	"	"	.18	.500
26.5	-02KZ	"	"	"	"	"	"	.13	.187
26.5	-03DZ	"	"	"	"	"	"	.13	.500
SPDT CONTACTS - 1 FORM C - (TRANSISTOR DRIVEN) (ELECTROMECHANICAL OUTPUT) WITH DIODE COIL SUPPRESSION									
	M28776/9								
5.0	-01SZ	201-2	2	9	1.0	0.2	0.1	.60	.187
5.0	-02SZ	201-2	2	9	1.0	0.2	0.1	.60	.500

See footnotes at end of table.

Downloaded from http://www.everyspec.com

TABLE 201.I. Relays, hybrid, ER, dc operated, part numbers and characteristics - Continued. 1/

Rated supply voltage (V dc)	Part number 2/	Figure number	Shock (see table II)	Vibration (see table III)	System voltage and contact current in amperes 3/ 28 V dc Resistive	Inductive	Lamp	Maximum base current to assure turn-on (mA)	Terminal style (see table IV)
SPDT CONTACTS - 1 FORM C - (TRANSISTOR DRIVEN) (ELECTROMECHANICAL OUTPUT) WITH DIODE COIL SUPPRESSION - Continued									
	M28776/5								
6.0	-020Z	201-2	2	9	1.0	0.2	0.1	.42	.187
6.0	-026Z	"	"	"	"	"	"	.42	.500
9.0	-021Z	"	"	"	"	"	"	.27	.187
9.0	-027Z	"	"	"	"	"	"	.27	.500
12.0	-022Z	"	"	"	"	"	"	.21	.187
12.0	-028Z	"	"	"	"	"	"	.21	.500
18.0	-023Z	"	"	"	"	"	"	.12	.187
18.0	-029Z	"	"	"	"	"	"	.12	.500
26.5	-024Z	"	"	"	"	"	"	.10	.187
26.5	-030Z	"	"	"	"	"	"	.10	.500
DPDT CONTACTS - 2 FORM C - INTERNAL MOSFET DRIVE (ELECTROMECHANICAL OUTPUT) WITH DIODE COIL SUPPRESSION									
	M28776/6								
5.0	-001Z	201-3	2	9	1.0	0.2	0.1	Gate turn-on voltage - 4.3 V dc minimum, 15 V dc maximum	.500
6.0	-002Z	"	"	"	"	"	"		.500
9.0	-003Z	"	"	"	"	"	"		.500
12.0	-004Z	"	"	"	"	"	"		.500
18.0	-006Z	"	"	"	"	"	"		.500
26.5	-008Z	"	"	"	"	"	"		.500

1/ Each relay possesses high level and low level capabilities. However, relays previously tested or used above 10 mA resistive at 6 V dc maximum or peak ac open circuits not recommended for subsequent use in low level applications. The low level rating is 10-50 milliamperes at 10-50 millivolts.

2/ The symbol "Z" is used to indicate that a failure rate symbol is required. See table V and the latest qualified products list (QPL) of the specification being used.

3/ These relays also have a rating of 100 mA resistive at 115 V ac 80 and 400 Hz.

Downloaded from http://www.everyspec.com

Downloaded from http://www.everyspec.com

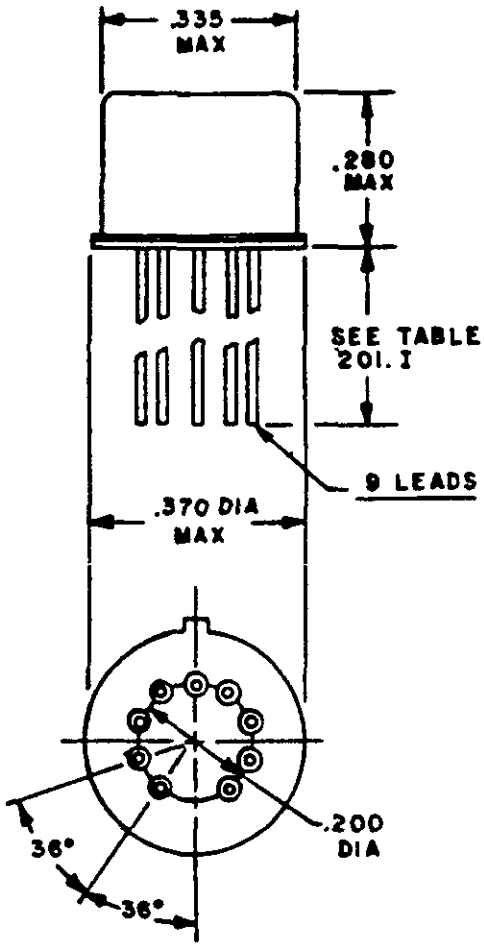

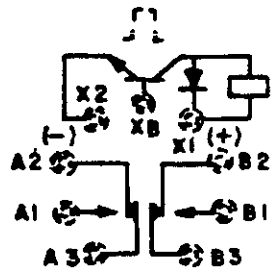

CIRCUIT DIAGRAM
TERMINAL VIEW

INCHES	MM
.200	5.08
.280	7.11
.335	8.51
.370	9.40

FIGURE 201-1. Relay, hybrid, ER, DPDT, low level to 1 ampere (transistor driven) (electromechanical output) (MIL-R-28776/1).

Downloaded from http://www.everyspec.com

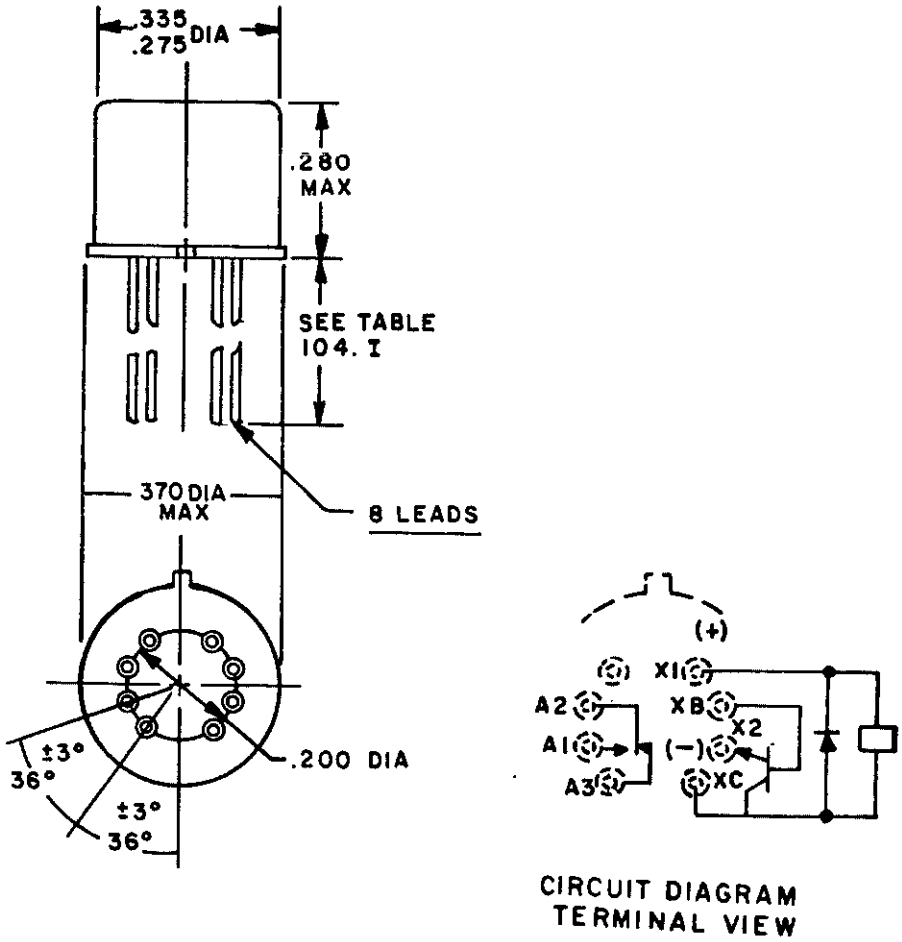

INCHES	MM
.200	5.08
.275	6.98
.280	7.11
.335	8.51
.370	9.40

FIGURE 201-2. Relay, hybrid, ER, SPDT, low level to 1 ampere (transistor driven) (electromechanical output) (MIL-R-28776/5).

Downloaded from http://www.everyspec.com

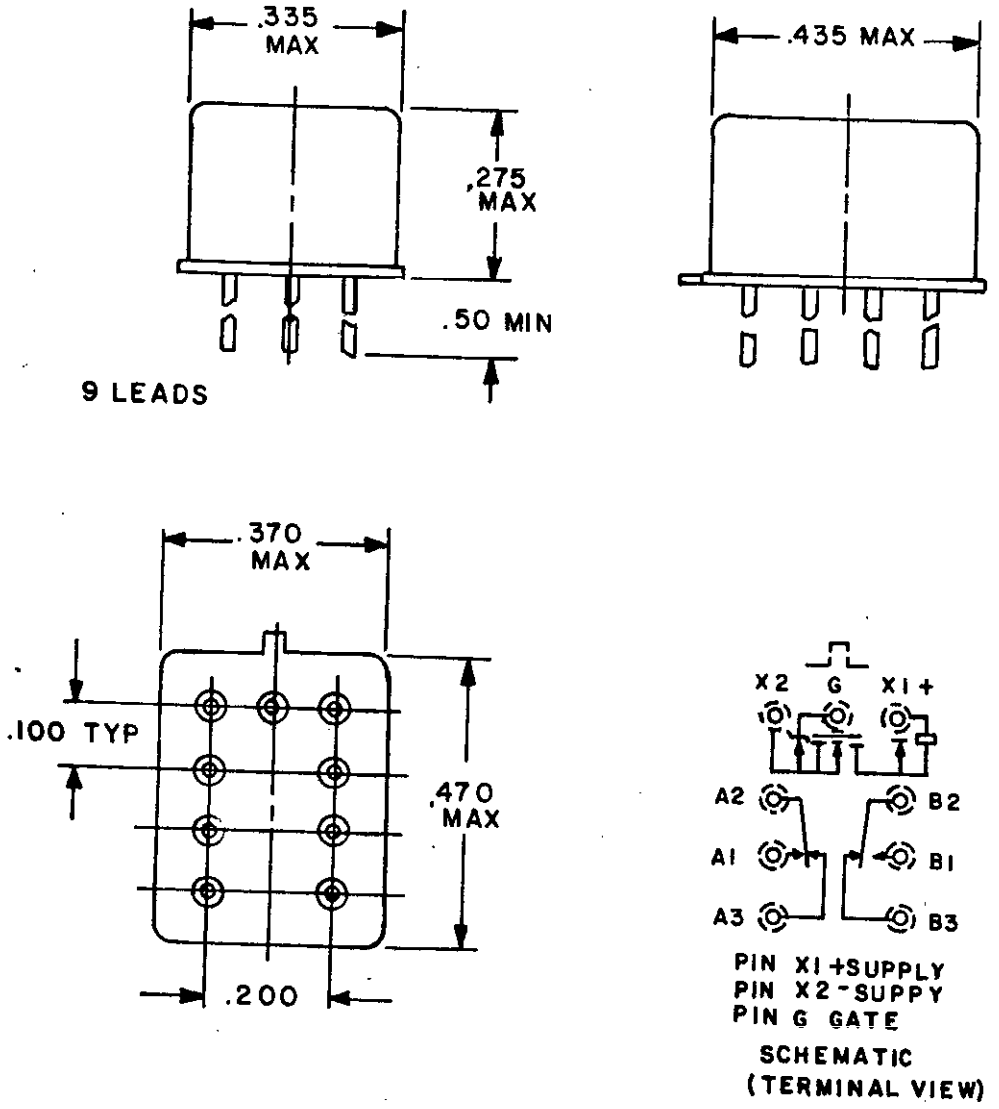

INCHES	MM
.100	2.54
.200	5.08
.335	8.51
.370	9.40
.375	9.53
.435	11.05
.490	11.94
.500	12.70

FIGURE 201-3. Relay, hybrid, ER, DPDT, internal mosfet drive with zener diode gate protection (MIL-R-28776/6).

Downloaded from http://www.everyspec.com

SUBSECTION 202

RELAYS, HYBRID, ESTABLISHED RELIABILITY (ER), DC OPERATED, SENSITIVE

SCOPE: This subsection covers relays that use a combination of solid state circuit input functioning with an electromechanical relay that performs the switching functions.

SECTION 202 1/

RELAYS, HYBRID, ESTABLISHED RELIABILITY (ER), DC OPERATED, SENSITIVE

(Applicable specification: MIL-R-28776)

Duty cycle: Continuous
Altitude: 70,000 feet
Enclosure: Hermetically sealed
Operating temperature range: B (see table I).

TABLE 202.I. Relays, hybrid, ER, dc operated, sensitive, part numbers and characteristics. 2/

Rated supply voltage (V dc)	Part number 3/	Figure number	Shock (see table II)	Vibration (see table III)	System voltage and contact current in amperes 4/ 28 V dc Resistive	Inductive	Lamp	Maximum base current to assure turn-on (mA)	Terminal style (see table IV)
SPDT CONTACTS - 1 FORM C - (SENSITIVE) (TRANSISTOR DRIVEN) (ELECTROMECHANICAL OUTPUT) WITH DIODE COIL SUPPRESSION									
	M28776/4								
5.0	-025Z	202-1	2	9	1.0	0.2	0.1	.28	.187
5.0	-033Z	"	"	"	"	"	"	.28	.500
6.0	-026Z	"	"	"	"	"	"	.20	.187
6.0	-034Z	"	"	"	"	"	"	.20	.500
9.0	-027Z	"	"	"	"	"	"	.13	.187
9.0	-035Z	"	"	"	"	"	"	.13	.500
12.0	-028Z	"	"	"	"	"	"	.10	.187
12.0	-036Z	"	"	"	"	"	"	.10	.500
18.0	-029Z	"	"	"	"	"	"	.07	.187
18.0	-037Z	"	"	"	"	"	"	.07	.500
26.5	-030Z	"	"	"	"	"	"	.05	.187
26.5	-038Z	"	"	"	"	"	"	.05	.500
36.0	-031Z	"	"	"	"	"	"	.04	.187
36.0	-039Z	"	"	"	"	"	"	.04	.500
40.0	-032Z	"	"	"	"	"	"	.03	.187
40.0	-040Z	"	"	"	"	"	"	.03	.500

Downloaded from http://www.everyspec.com

TABLE 202.I. Relays, hybrid, ER, dc operated, sensitive, part numbers and characteristics. 2/

Rated supply voltage (V dc)	Part number 3/	Figure number	Shock (see table II)	Vibration (see table III)	System voltage and contact current in amperes 4/ 28 V dc Resistive	Inductive	Lamp	Maximum base current to assure turn-on (mA)	Terminal style (see table IV)
DPDT CONTACTS - 2 FORM C - (TRANSISTOR DRIVEN) (ELECTROMECHANICAL OUTPUT) (SENSITIVE WITH DIODE COIL SUPPRESSION)									
	M28776/3								
5.0	-025Z	202-2	2	9	1.0	0.2	0.1	.37	.187
5.0	-033Z	"	"	"	"	"	"	.37	.500
6.0	-026Z	"	"	"	"	"	"	.25	.187
6.0	-034Z	"	"	"	"	"	"	.25	.500
9.0	-027Z	"	"	"	"	"	"	.18	.187
9.0	-035Z	"	"	"	"	"	"	.18	.500
12.0	-028Z	"	"	"	"	"	"	.12	.187
12.0	-036Z	"	"	"	"	"	"	.12	.500
18.0	-029Z	"	"	"	"	"	"	.09	.187
18.0	-037Z	"	"	"	"	"	"	.09	.500
26.5	-030Z	"	"	"	"	"	"	.06	.187
26.5	-038Z	"	"	"	"	"	"	.06	.500
36.0	-031Z	"	"	"	"	"	"	.034	.187
36.0	-039Z	"	"	"	"	"	"	.034	.500
48.0	-032Z	"	"	"	"	"	"	.026	.187
48.0	-040Z	"	"	"	"	"	"	.026	.500
DPDT CONTACTS - 2 FORM C - INTERNAL MOSFET DRIVE (ELECTROMECHANICAL OUTPUT) (SENSITIVE WITH DIODE COIL SUPPRESSION)									
	M28776/7								
5.0	-001Z	202-3	2	9	1.0	0.2	0.1	Gate turn-on voltage - 4.3 V dc minimum, 15 V dc maximum	.500
6.0	-002Z	"	"	"	"	"	"		.500
9.0	-003Z	"	"	"	"	"	"		.500
12.0	-004Z	"	"	"	"	"	"		.500
18.0	-005Z	"	"	"	"	"	"		.500
26.5	-006Z	"	"	"	"	"	"		.500

1/ These relays are not recommended in critical applications or in applications where a less sensitive relay can be used.

2/ Each relay possesses high level and low level capabilities. However, relays previously tested or used above 10 mA resistive at 6 V dc maximum or peak ac open circuits not recommended for subsequent use in low level applications. The low level rating is 10-50 microamperes at 10-50 millivolts.

3/ The symbol "Z" is used to indicate that a failure rate symbol is required. See table V and the latest qualified products list (QPL) of the specification being used.

4/ These relays also have a rating of 100 mA at 115 V ac 60 and 400 Hz.

Downloaded from http://www.everyspec.com

Downloaded from http://www.everyspec.com

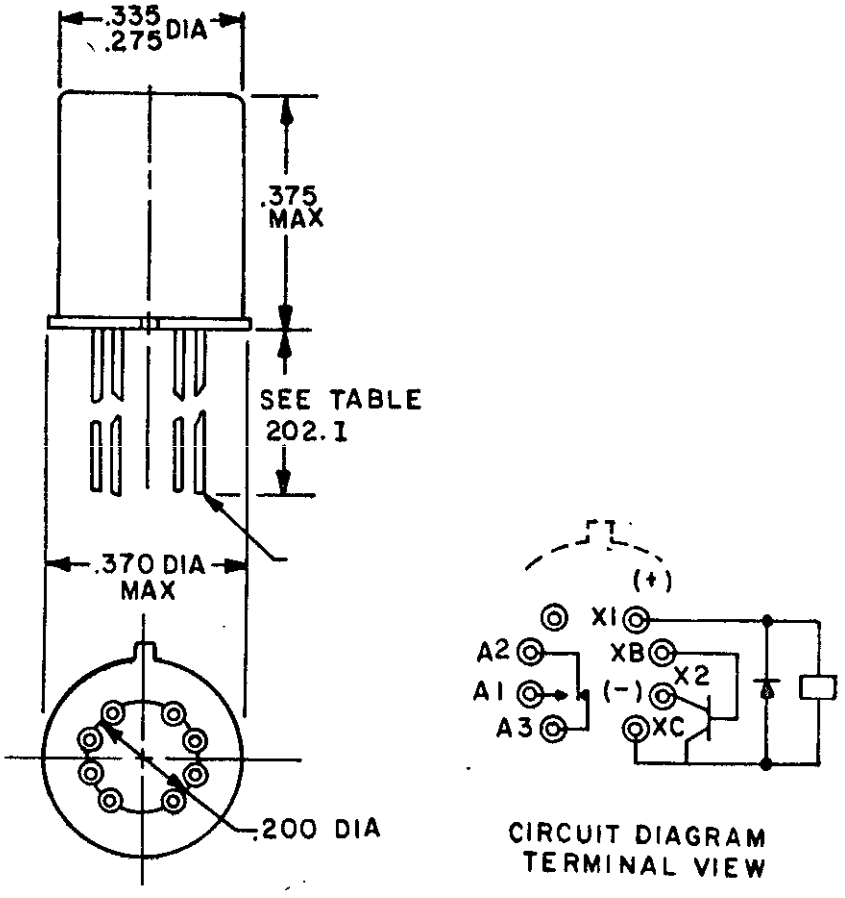

INCHES	MM
.200	5.08
.275	6.98
.335	8.51
.370	9.40
.375	9.52

FIGURE 202-1. Relay, hybrid, ER, SPDT, low level to 1 ampere (sensitive), (transistor driven) (electromechanical output) (MIL-R-28776/4).

Downloaded from http://www.everyspec.com

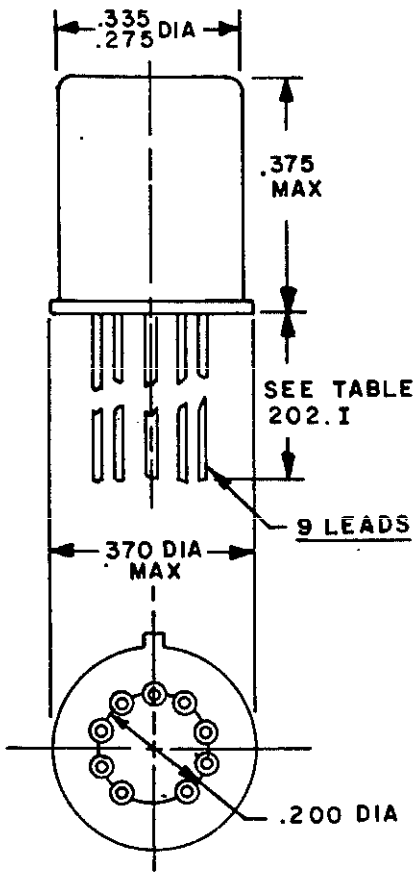

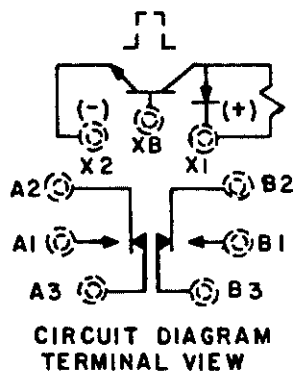

INCHES	MM
.200	5.08
.275	6.98
.335	8.51
.370	9.40
.375	9.52

FIGURE 202-2. Relay, hybrid, ER, DPDT, low level to 1 ampere (sensitive), (transistor driven) (electromechanical output) (MIL-R-28776/3).

Downloaded from http://www.everyspec.com

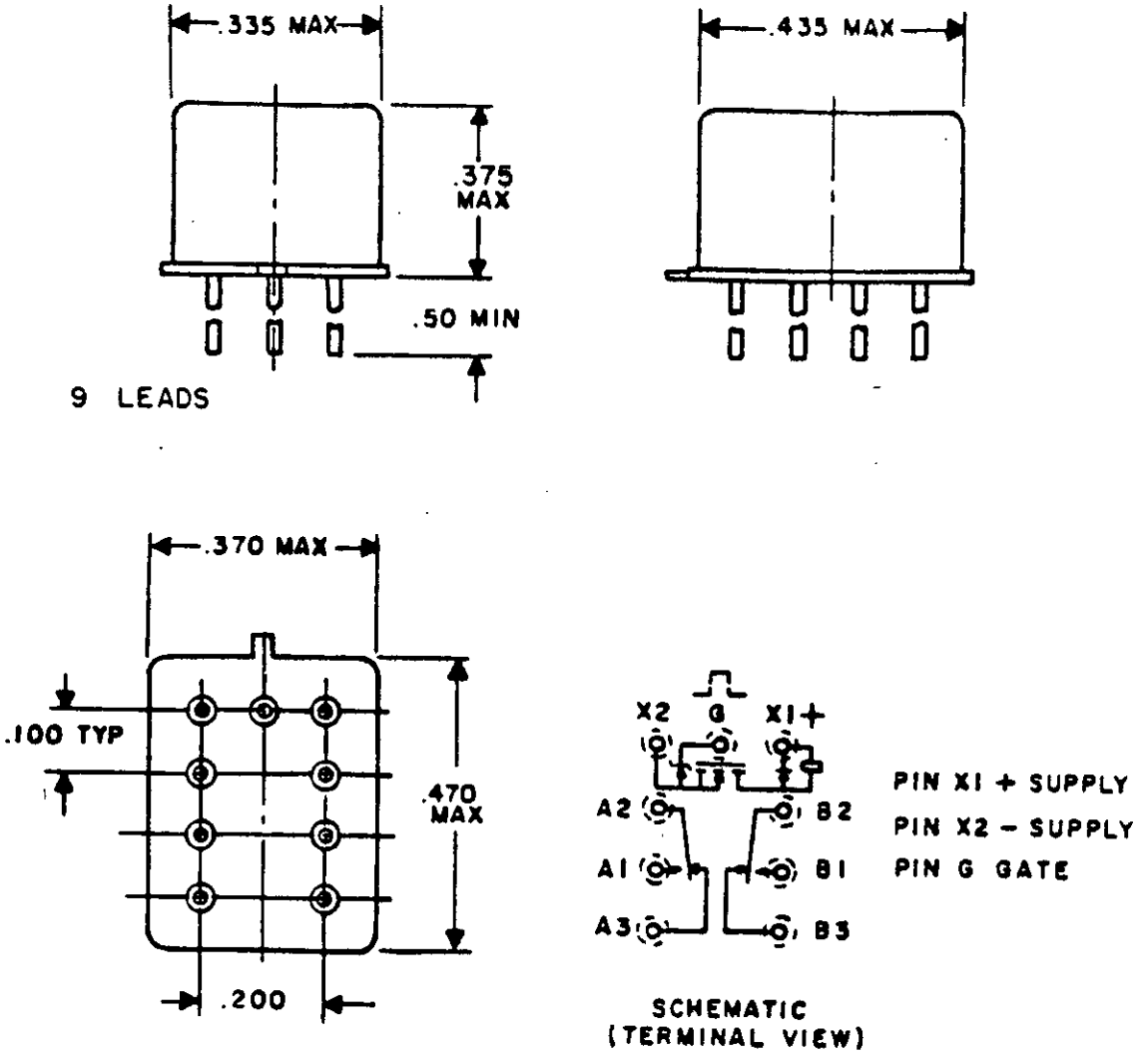

INCHES	MM
.100	2.54
.200	5.08
.335	8.51
.370	9.40
.375	9.53
.435	11.05
.490	11.94
.500	12.70

FIGURE 202-3. Relay, hybrid, ER, DPDT, low level to 1 ampere, sensitive, internal mosfet drive with zener diode gate protection (MIL-R-28776/7).

Downloaded from http://www.everyspec.com

SECTION 300

RELAYS, ELECTROMAGNETIC (EM), GENERAL PURPOSE

Subsection:

301 Relays, EM, dc operated (MIL-R-5757).

302 Relays, EM, dc operated (MIL-R-6106).

303 Relays, EM, ac operated (MIL-R-5757).

304 Relays, EM, ac operated (MIL-R-6106).

305 Relays, EM, sensitive, dc operated (MIL-R-5757).

306 Relays, EM, latching, dc operated (MIL-R-6106).

307 Relays, EM, latching, ac operated (MIL-R-6106).

308 Relays, EM, latching, dc/ac operated (MIL-R-6106).

Downloaded from http://www.everyspec.com

SUBSECTION 301

RELAYS, ELECTROMAGNETIC, DC OPERATED (MIL-R-5757)

SCOPE: This section covers relays with coils dc voltage rated and contacts nominally rated up to and including 10 amperes for use in electronic equipment.

SUBSECTION 301.

RELAYS, ELECTROMAGNETIC (EM), DC OPERATED

(Applicable specification: MIL-R-5757)

Duty cycle: Continuous
Altitude: 70,000 feet
Enclosure: Hermetic
Operating temperature range: B

TABLE 301.I. Relays, EM, dc operated, part numbers and characteristics.

Rated coil voltage	Part number	Figure number	Shock (see table II)	Vibration (see table III)	System voltage and frequency - contact current in amperes																				Terminal style (see table IV)
					28 V dc				400 Hz								60 Hz								
									115 V 1-phase				115/200 V 3-phase				115 V 1 phase				115/200 V 3-phase				
					Resistive	Inductive	Motor	Lamp	Resistive	Inductive	Motor	Lamp	Resistive	Inductive	Motor	Lamp	Resistive	Inductive	Motor	Lamp	Resistive	Inductive	Motor	Lamp	
DPDT CONTACTS - 2 FORM C																									
	M5757/23 RA flange																								
6.0	-011	301-1	3	6	10.0	6.0	3.0	1.0	5.0	2.5	3.0	0.8	---	---	---	---	3.0	2.0	1.5	0.5	---	---	---	---	L
"	-013	"	"	"	"	"	"	"	"	"	"	"	"	"	"	"	"	"	"	"	"	"	"	"	SKP
	No mount																								
"	-015	"	"	"	"	"	"	"	"	"	"	"	"	"	"	"	"	"	"	"	"	"	"	"	SKP
	Lay flange																								
"	-033	"	"	"	"	"	"	"	"	"	"	"	"	"	"	"	"	"	"	"	"	"	"	"	L
	M5757/23 RA flange																								
12.0	-006	"	"	"	"	"	"	"	"	"	"	"	"	"	"	"	"	"	"	"	"	"	"	"	L
"	-008	"	"	"	"	"	"	"	"	"	"	"	"	"	"	"	"	"	"	"	"	"	"	"	SKP
	No mount																								
"	-010	"	"	"	"	"	"	"	"	"	"	"	"	"	"	"	"	"	"	"	"	"	"	"	SKP
	Lay flange																								
"	-032	"	"	"	"	"	"	"	"	"	"	"	"	"	"	"	"	"	"	"	"	"	"	"	L
	M5757/23 RA flange																								
18.0	-037	"	"	"	"	"	"	"	"	"	"	"	"	"	"	"	"	"	"	"	"	"	"	"	L
"	-039	"	"	"	"	"	"	"	"	"	"	"	"	"	"	"	"	"	"	"	"	"	"	"	SKP
	No mount																								
"	-041	"	"	"	"	"	"	"	"	"	"	"	"	"	"	"	"	"	"	"	"	"	"	"	SKP
	Lay flange																								
"	-042	"	"	"	"	"	"	"	"	"	"	"	"	"	"	"	"	"	"	"	"	"	"	"	L

Downloaded from http://www.everyspec.com

TABLE 301.I. Relays, EM, dc operated, part numbers and characteristics - Continued.

Rated coil voltage	Part number	Figure number	Shock (see table II)	Vibration (see table III)	System voltage and frequency - contact current in amperes																			Terminal style (see table IV)
					28 V dc				400 Hz								60 Hz							
									115 V 1-phase				115/200 V 3-phase				115 V 1 phase				115/200 V 3-phase			
					Resis-tive	Induc-tive	Motor	Lamp	Resis-tive	Induc-tive	Motor	Lamp	Resis-tive	Induc-tive	Motor	Lamp	Resis-tive	Induc-tive	Motor	Lamp	Resis-tive	Induc-tive	Motor	Lamp	
DPDT CONTACTS - 2 FORM C - Continued																									
	M5757/23 RA flange																								
26.5	-001	301-1	3	6	10.0	6.0	3.0	1.0	5.0	2.5	3.0	0.8	---	---	---	---	3.0	2.0	1.5	0.5	---	---	---	---	L
"	-003	"	"	"	"	"	"	"	"	"	"	"	"	"	"	"	"	"	"	"	"	"	"	"	SKP
	No mount																								
"	-005	"	"	"	"	"	"	"	"	"	"	"	"	"	"	"	"	"	"	"	"	"	"	"	SKP
	Lay flange																								
"	-031	"	"	"	"	"	"	"	"	"	"	"	"	"	"	"	"	"	"	"	"	"	"	"	L
	M5757/23 RA flange																								
48.0	-016	"	"	"	"	"	"	"	"	"	"	"	"	"	"	"	"	"	"	"	"	"	"	"	L
"	-018	"	"	"	"	"	"	"	"	"	"	"	"	"	"	"	"	"	"	"	"	"	"	"	SKP
	No mount																								
"	-020	"	"	"	"	"	"	"	"	"	"	"	"	"	"	"	"	"	"	"	"	"	"	"	SKP
	Lay flange																								
"	-034	"	"	"	"	"	"	"	"	"	"	"	"	"	"	"	"	"	"	"	"	"	"	"	L
	M5757/23 RA flange																								
120.0	-026	"	"	"	"	"	"	"	"	"	"	"	"	"	"	"	"	"	"	"	"	"	"	"	L
"	-028	"	"	"	"	"	"	"	"	"	"	"	"	"	"	"	"	"	"	"	"	"	"	"	SKP
	No mount																								
"	-030	"	"	"	"	"	"	"	"	"	"	"	"	"	"	"	"	"	"	"	"	"	"	"	SKP
	Lay flange																								
"	-036	"	"	"	"	"	"	"	"	"	"	"	"	"	"	"	"	"	"	"	"	"	"	"	L
	M5757/10 No mount																								
6.0	-059	301-2	"	"	2.0	1.0	---	0.1	0.3	0.3	---	0.1	"	"	"	"	0.3	0.3	---	0.1	"	"	"	"	SP
	M5757/10 No mount																								
12.0	-060	301-2	"	"	2.0	1.0	---	0.1	0.3	0.3	---	0.1	"	"	"	"	0.3	0.3	---	0.1	"	"	"	"	SP

Downloaded from http://www.everyspec.com

TABLE 301.I. Relays, EM, dc operated, part numbers and characteristics - Continued.

Rated coil voltage	Part number	Figure number	Shock (see table II)	Vibration (see table III)	System voltage and frequency - contact current in amperes																				Terminal style (see table IV)
					28 V dc				400 Hz								60 Hz								
									115 V 1-phase				115/200 V 3-phase				115 V 1 phase				115/200 V 3-phase				
					Resistive	Inductive	Motor	Lamp	Resistive	Inductive	Motor	Lamp	Resistive	Inductive	Motor	Lamp	Resistive	Inductive	Motor	Lamp	Resistive	Inductive	Motor	Lamp	
DPDT CONTACTS - 2 FORM C - Continued																									
	M5757/10 Bracket																								
26.5	-035	301-2	3	6	2.0	1.0	---	0.1	0.3	0.3	---	0.1	---	---	---	---	0.3	0.3	---	0.1	---	---	---	---	L
	Flange																								
"	-039	"	"	"	"	"	"	"	"	"	"	"	"	"	"	"	"	"	"	"	"	"	"	"	L
"	-040	"	"	"	"	"	"	"	"	"	"	"	"	"	"	"	"	"	"	"	"	"	"	"	SP
	No mount																								
"	-052	"	"	"	"	"	"	"	"	"	"	"	"	"	"	"	"	"	"	"	"	"	"	"	L
"	-054	"	"	"	"	"	"	"	"	"	"	"	"	"	"	"	"	"	"	"	"	"	"	"	SP
	PC mount																								
"	-056	"	"	"	"	"	"	"	"	"	"	"	"	"	"	"	"	"	"	"	"	"	"	"	SP
	M5757/8																								
26.5	-002	301-3	"	5	"	---	"	---	---	---	"	---	"	"	"	"	---	---	"	---	"	"	"	"	L
4PDT CONTACTS - 4 FORM C																									
	M5757/7																								
26.5	-001	301-4	3	5	2.0	---	---	---	---	---	---	---	---	---	---	---	---	---	---	---	---	---	---	---	L
	M5757/15																								
"	-001	301-5	"	"	5.0	3.0	"	.8	5.0	3.0	"	.8	---	---	"	---	---	---	"	---	---	---	"	---	L
	M5757/18																								
"	-001	301-6	"	"	10.0	6.0	"	2.0	10.0	10.0	"	2.0	10.0	10.0	"	2.0	6.0	4.0	"	1.5	6.0	4.0	"	1.5	L
6PDT CONTACTS - 6 FORM C																									
	M5757/1																								
26.5	-027	301-7	3	6	2.0	---	---	---	---	---	---	---	---	---	---	---	---	---	---	---	---	---	---	---	L
"	-028	301-7	"	6	2.0	---	"	---	---	---	"	---	"	"	"	"	"	"	"	"	"	"	"	"	L
	M5757/16																								
"	-001	301-8	"	5	5.0	3.0	"	.8	5.0	3.0	"	.8	"	"	"	"	"	"	"	"	"	"	"	"	L

Downloaded from http://www.everyspec.com

Downloaded from http://www.everyspec.com

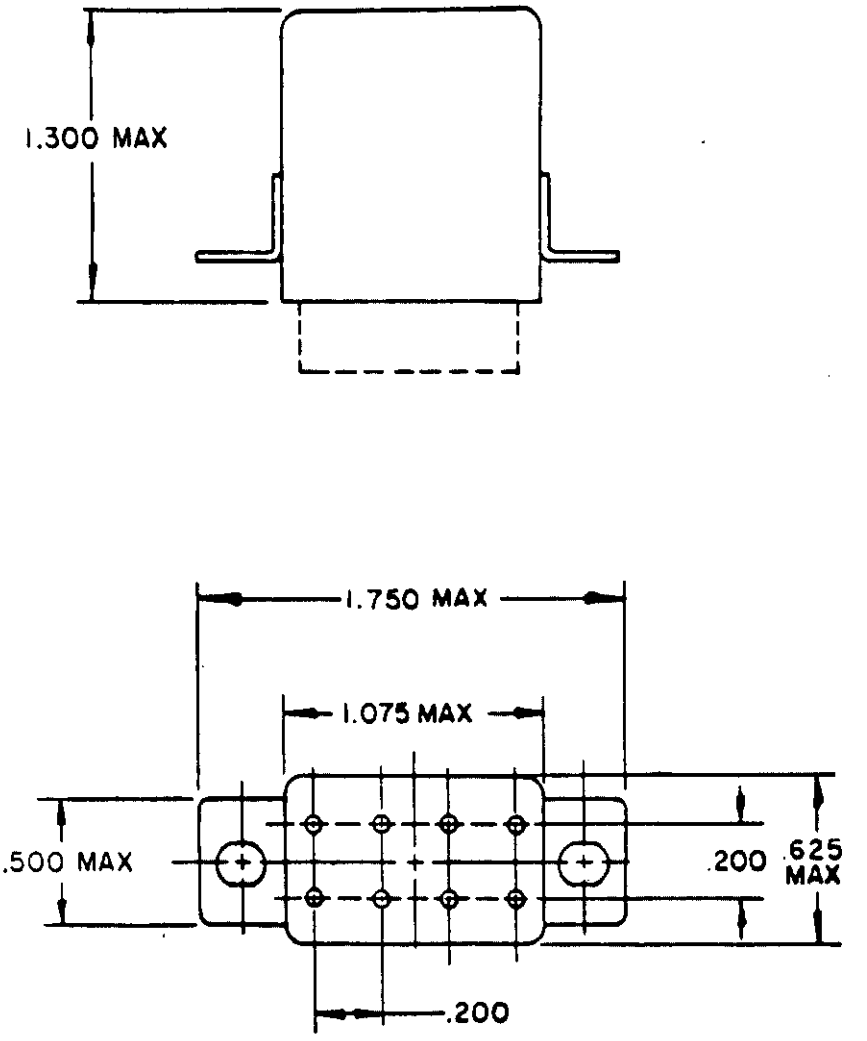

RAISED-FLANGE MOUNT

FIGURE 301-1. Relay, EM, DPDT, 10 amperes (MIL-R-5757/23).

Downloaded from http://www.everyspec.com

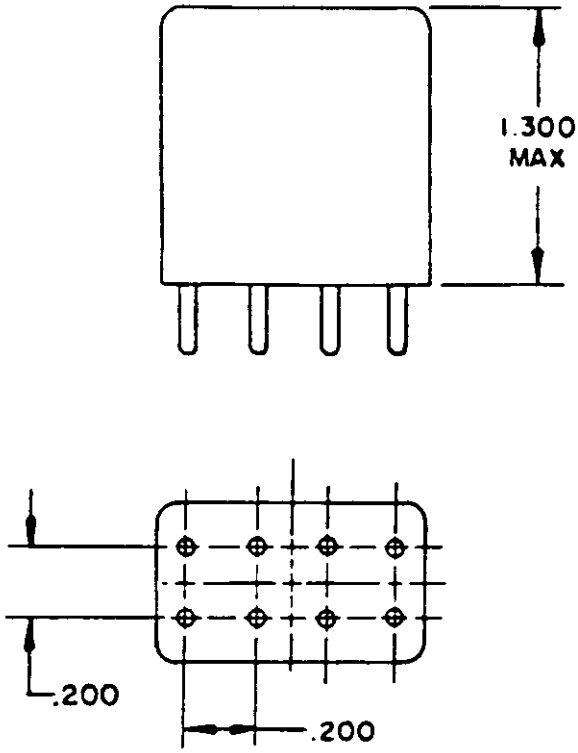

PLUG-IN MOUNT

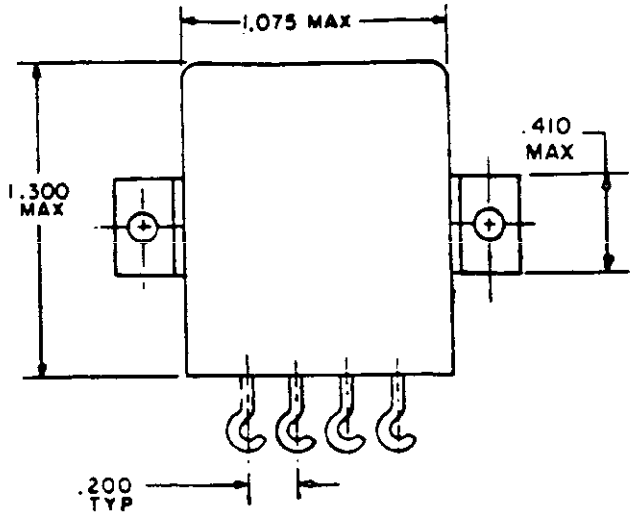

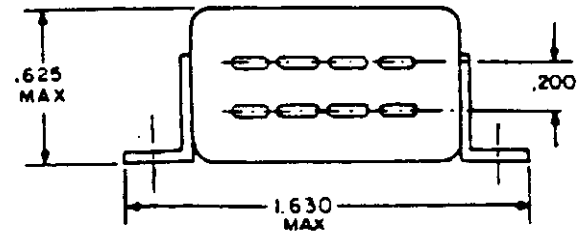

LAYDOWN FLANGE MOUNT

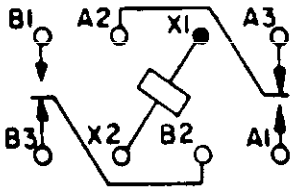

CIRCUIT DIAGRAM

PIN

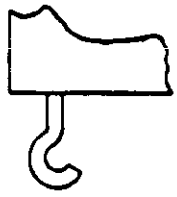

LUG

INCHES	MM
.200	5.08
.410	10.41
.500	12.70
.625	15.88
1.075	27.31
1.300	33.02
1.630	41.40
1.750	44.45

FIGURE 301-1. Relay, EM, DPDT, 10 amperes (MIL-R-5757/23) - Continued.

Downloaded from http://www.everyspec.com

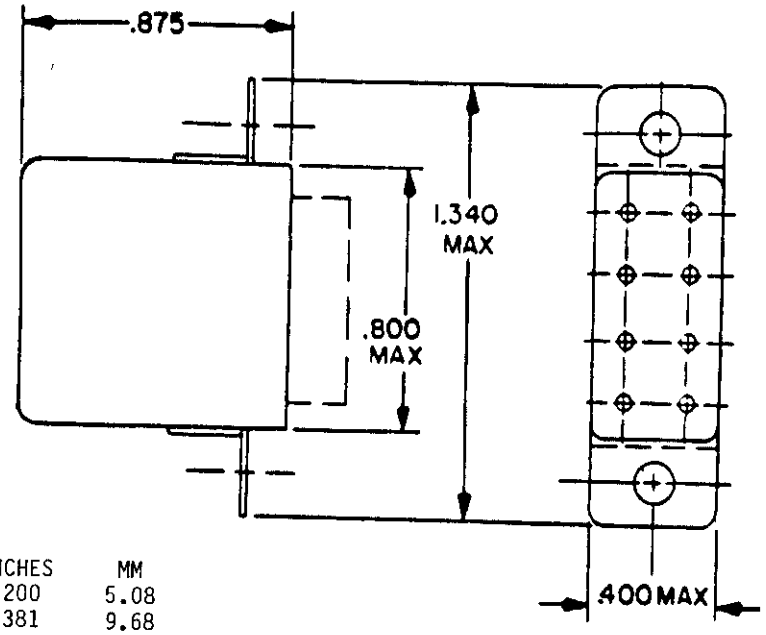

INCHES	MM
.200	5.08
.381	9.68
.400	10.16
.460	11.68
.800	20.32
.875	22.23
1.266	32.16
1.340	34.04

FLANGE MOUNT

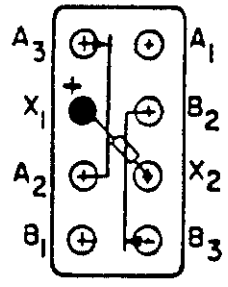

CIRCUIT DIAGRAM

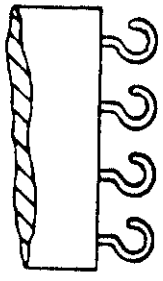

SOLDER LUG (L)

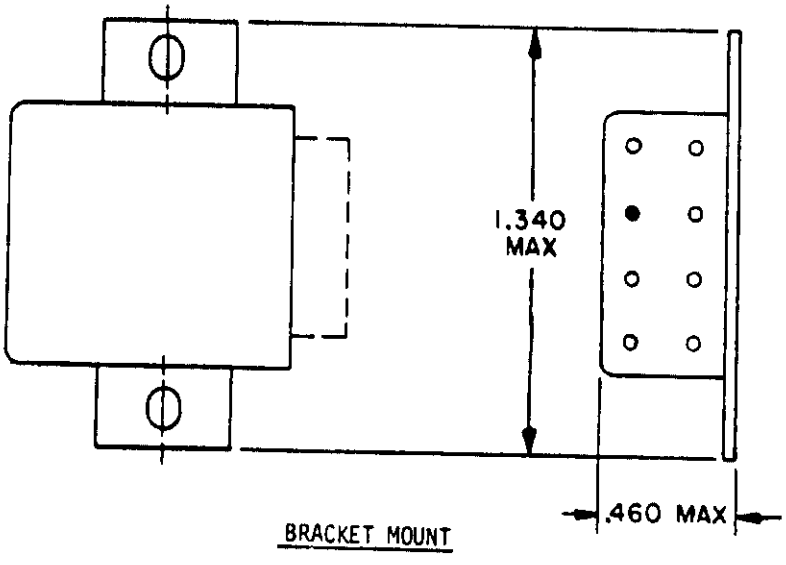

BRACKET MOUNT

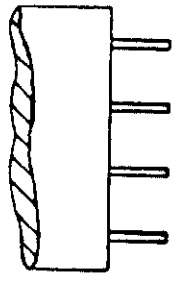

PIN (PC)

FIGURE 301-2. Relay, EM, DPDT, 2 amperes (MIL-R-5757/10).

Downloaded from http://www.everyspec.com

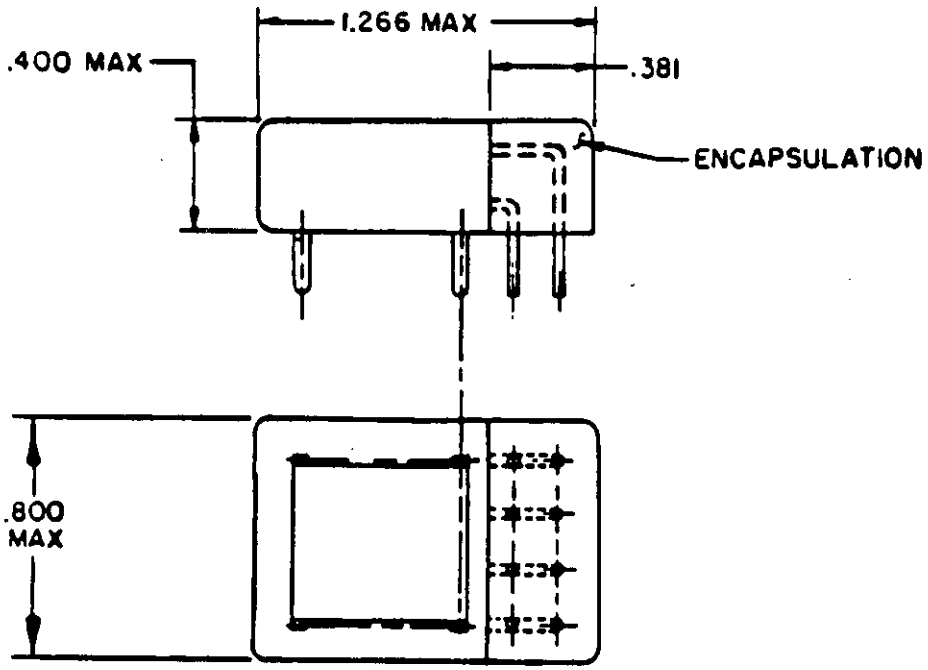

PC MOUNT

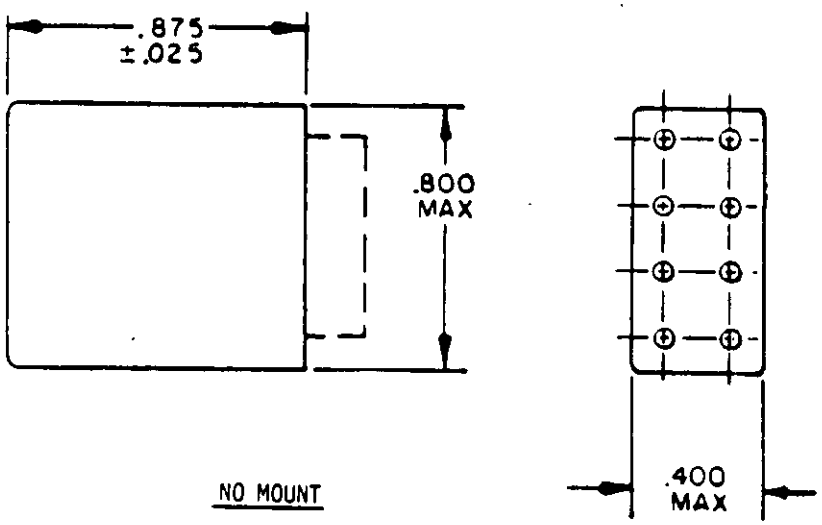

NO MOUNT

FIGURE 301-2. Relay, EM, DPDT, 2 amperes (MIL-R-5757/10) - Continued.

Downloaded from http://www.everyspec.com

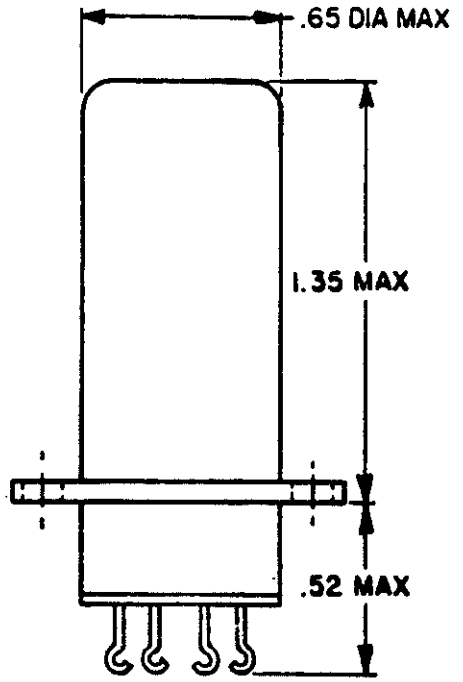

INCHES	MM
.52	13.21
.65	16.51
.73	18.54
1.08	27.43
1.35	34.29

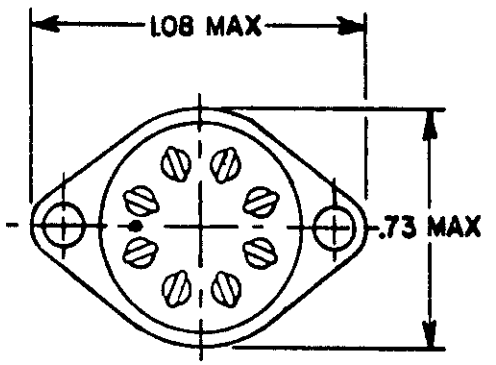

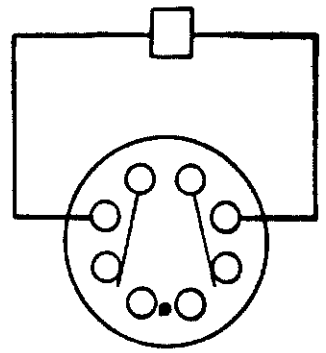

SCHEMATIC DIAGRAM
UNENERGIZED POSITION
BOTTOM VIEW

FIGURE 301-3. Relay, EM, DPDT, 2 amperes (MIL-R-5757/8).

Downloaded from http://www.everyspec.com

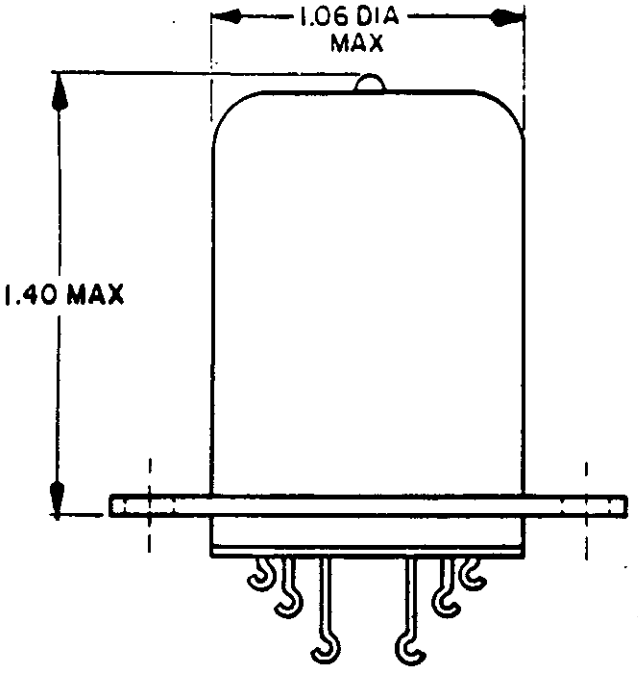

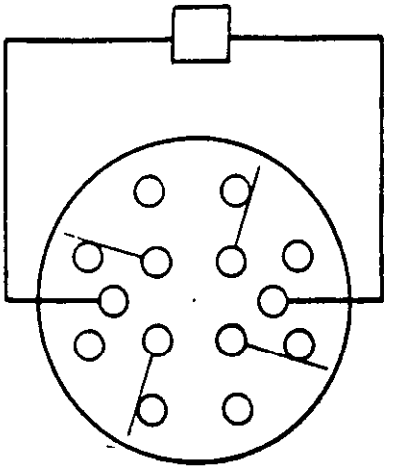

CIRCUIT DIAGRAM

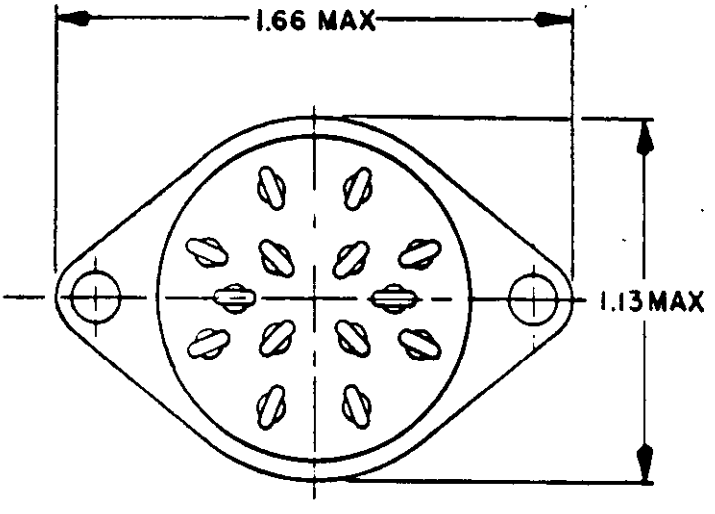

INCHES	MM
1.06	26.92
1.13	28.70
1.40	35.56
1.66	42.16

FIGURE 301-4. Relay, EM, 4PDT, 2 amperes (MIL-R-5757/7).

Downloaded from http://www.everyspec.com

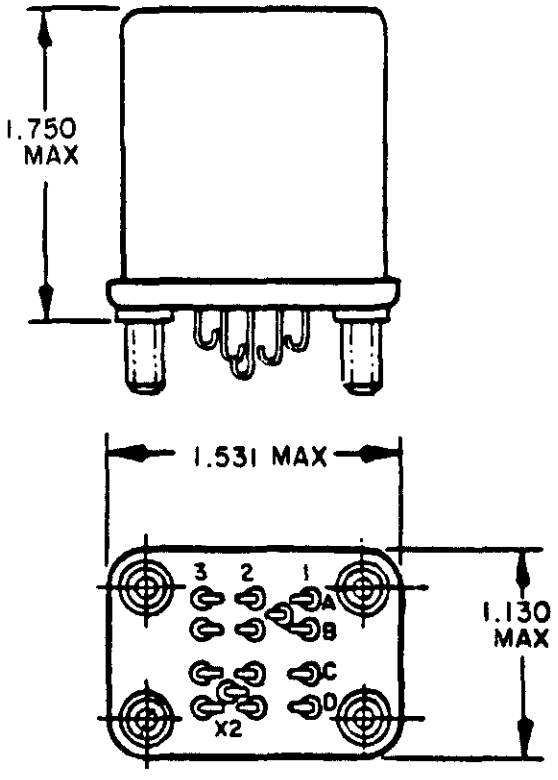

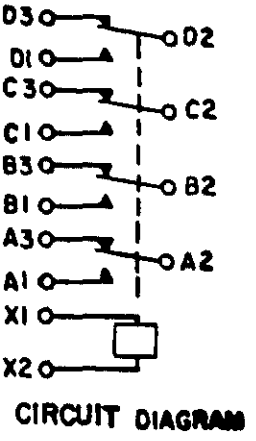

INCHES	MM
1.130	28.70
1.531	38.89
1.750	44.45

FIGURE 301-5. Relay, EM, 4PDT, 5 amperes (MIL-R-5757/15).

Downloaded from http://www.everyspec.com

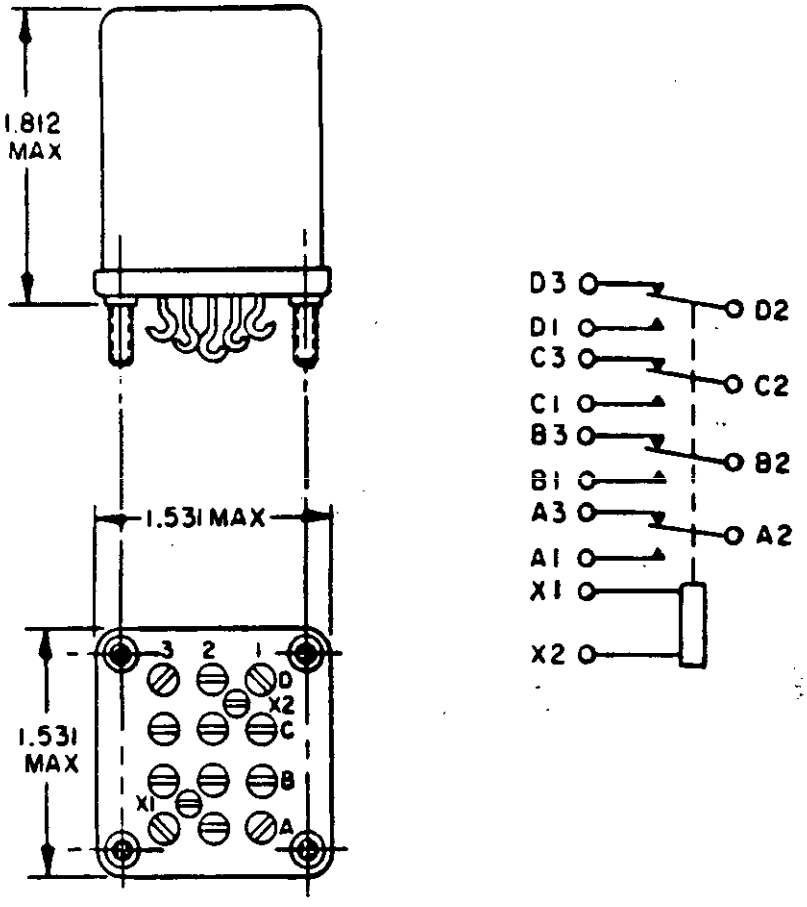

INCHES	MM
1.531	38.89
1.812	46.02

FIGURE 301-6. Relay, EM, 4PDT, 10 amperes (MIL-R-5757/18).

Downloaded from http://www.everyspec.com

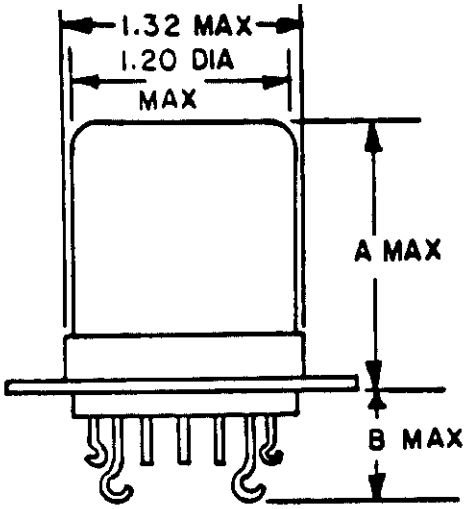

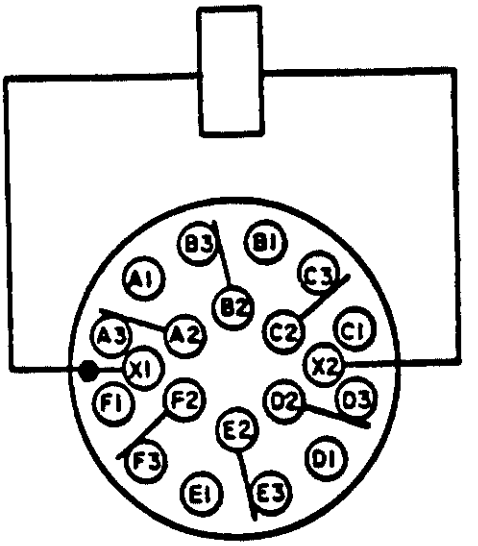

SCHEMATIC DIAGRAM
UNENERGIZED POSITION
BOTTOM VIEW

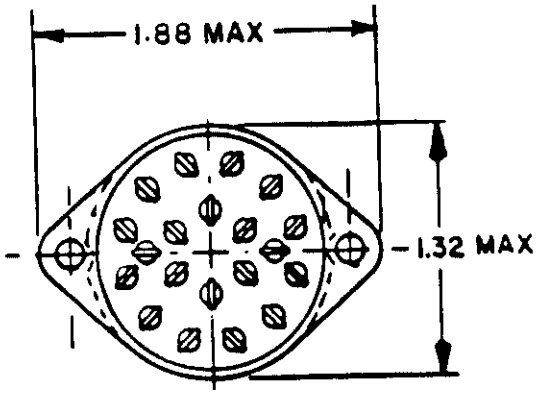

INCHES	MM
1.20	30.5
1.32	33.5
1.88	47.8

Dash number	A max	B max
-027	1.38 (35.1)	.56 (14.2)
-028	1.10 (27.9)	.84 (21.3)

FIGURE 301-7. Relay, EM, 6PDT, low level to 2 amperes (MIL-R-5757/1).

Downloaded from http://www.everyspec.com

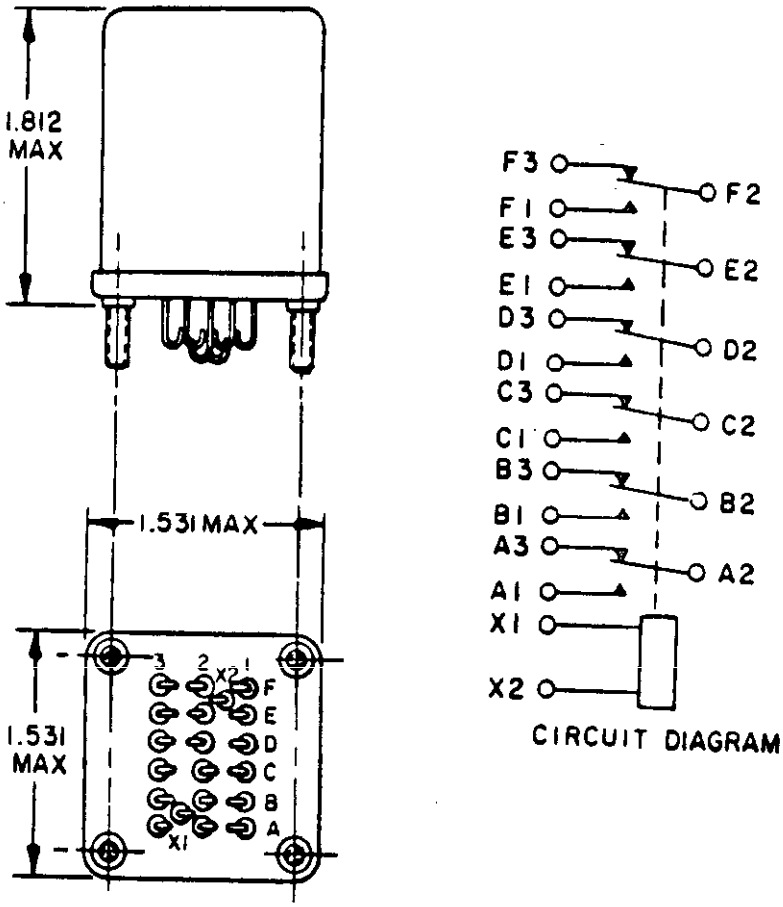

INCHES	MM
1.531	38.89
1.812	46.02

FIGURE 301-8. Relay, EM, 6PDT, 5 amperes (MIL-R-5757/16).

Downloaded from http://www.everyspec.com

SUBSECTION 302

RELAYS, ELECTROMAGNETIC (EM), DC OPERATED (MIL-R-6106)

SCOPE: This section covers dc voltage rated relays nominally rated 5 amperes and up for use in electrical systems. The relays are capable of meeting the electrical and environmental requirements when mounted directly to the structure.

RELAYS, ELECTROMAGNETIC (EM), DC OPERATED
(Applicable specification: MIL-R-6106)

Duty cycle: Continuous
Rated coil voltage: 28 V dc

TABLE 302.1. Relays, EM, dc operated, part numbers and characteristics.

Part number	Figure number	Operating temp range (see table I)	Shock (see table II)	Vibration (see table III)	System voltage and frequency-contact current in amperes																			
					28 V dc				400 Hz								50/60 Hz							
									115 V 1-phase				115/200 V 3-phase				115 V 1-phase				115/200 V 3-phase			
					Resistive	Inductive	Motor	Lamp	Resistive	Inductive	Motor	Lamp	Resistive	Inductive	Motor	Lamp	Resistive	Inductive	Motor	Lamp	Resistive	Inductive	Motor	Lamp
SPST CONTACTS - 1 FORM A																								
*MS24185-D1	302-1	D	See	1	400	100	400	---	---	---	---	---	---	---	---	---	---	---	---	---	---	---	---	---
MS24184-D1	302-2	"	spec	See spec	300	"	250	"	300	"	150	"	"	"	"	"	"	"	"	"	"	"	"	"
MS24184-D2 1/	302-2	"	"	"	300	"	250	"	300	"	"	"	"	"	"	"	"	"	"	"	"	"	"	"
MS24142-D1	302-3	G	"	"	200	"	200	"	200	"	"	"	"	"	"	"	"	"	"	"	"	"	"	"
MS24142-D2 1/	302-3	G	"	"	"	"	"	"	200	"	"	"	"	"	"	"	"	"	"	"	"	"	"	"
MS24171-D1	302-4	D	"	1	"	"	"	"	---	"	---	"	"	"	"	"	"	"	"	"	"	"	"	"
MS24183-D1	302-36	"	"	See spec	"	"	"	"	200	"	150	"	"	"	"	"	"	"	"	"	"	"	"	"
MS24182-D1	302-37	"	"	"	100	"	100	50	100	"	75	50	"	"	"	"	"	"	"	"	"	"	"	"
MS24141-D1	302-5	G	"	"	"	"	"	"	"	"	"	"	"	"	"	"	"	"	"	"	"	"	"	"
MS24141-D2 1/	302-5	"	"	"	"	"	"	"	"	"	"	"	"	"	"	"	"	"	"	"	"	"	"	"
MS24140-D1	302-6	"	"	"	50	50	50	25	50	50	50	25	"	"	"	"	"	"	"	"	"	"	"	"
MS24140-D2 1/	302-6	"	"	"	"	"	"	"	50	50	50	25	"	"	"	"	"	"	"	"	"	"	"	"
*MS24166-D1	302-7	D	"	1	"	"	"	"	---	---	---	---	"	"	"	"	"	"	"	"	"	"	"	"
SPDT CONTACTS - 1 FORM C																								
M6106/19																								
-003	302-55	G	6	See	---	---	---	---	---	---	---	---	---	---	---	---	10	10	8	---	---	---	---	---
-004	"	"	"	spec	"	"	"	"	"	"	"	"	"	"	"	"	"	"	"	"	"	"	"	"
-025	"	"	"	"	"	"	"	"	"	"	"	"	"	"	"	"	"	"	"	"	"	"	"	"
-010	"	"	"	"	25	12	10	5	25	15	10	5	"	"	"	"	---	---	---	"	"	"	"	"
-011	"	"	"	"	"	"	"	"	"	"	"	"	"	"	"	"	"	"	"	"	"	"	"	"
-012	"	"	"	"	"	"	"	"	"	"	"	"	"	"	"	"	"	"	"	"	"	"	"	"
-013	"	"	"	"	"	"	"	"	"	"	"	"	"	"	"	"	"	"	"	"	"	"	"	"
-014	"	"	"	"	"	"	"	"	"	"	"	"	"	"	"	"	"	"	"	"	"	"	"	"
SPDT CONTACTS - 1 FORM C - WITH COIL SUPPRESSION																								
M6106/19																								
-015	302-55	G	6	See	25	12	10	5	25	15	10	5	---	---	---	---	---	---	---	---	---	---	---	---
-016	"	"	"	spec	"	"	"	"	"	"	"	"	"	"	"	"	"	"	"	"	"	"	"	"
-017	"	"	"	"	"	"	"	"	"	"	"	"	"	"	"	"	"	"	"	"	"	"	"	"
-018	"	"	"	"	"	"	"	"	"	"	"	"	"	"	"	"	"	"	"	"	"	"	"	"
-019	"	"	"	"	"	"	"	"	"	"	"	"	"	"	"	"	"	"	"	"	"	"	"	"

See footnotes at end of table.

Downloaded from http://www.everyspec.com

TABLE 302.I. Relays, EM, dc operated, part numbers and characteristics - Continued.

Part number	Figure number	Operating temp range (see table I)	Shock (see table II)	Vibration (see table III)	System voltage and frequency-contact current in amperes																			
					28 V dc				400 Hz								50/60 Hz							
									115 V 1-phase				115/200 V 3-phase				115 V 1-phase				115/200 V 3-phase			
					Resistive	Inductive	Motor	Lamp	Resistive	Inductive	Motor	Lamp	Resistive	Inductive	Motor	Lamp	Resistive	Inductive	Motor	Lamp	Resistive	Inductive	Motor	Lamp
SPST NO DM CONTACTS - 1 FORM X																								
MS27242-1	302-39	G	See spec	See spec	100	100	100	---	100	100	100	---	---	---	---	---	---	---	---	---	---	---	---	---
MS27242-2 1/	302-39	G			100	100	100	---	100	100	100	---	---	---	---	---	---	---	---	---	---	---	---	---
SPST CONTACTS - 1 FORM Y - WITH COIL SUPPRESSION																								
M6106/26 -001	302-56	D	See spec	See spec	50	50	---	---	65	65	---	---	---	---	---	---	---	---	---	---	---	---	---	---
SPDT CONTACTS - 1 FORM Z																								
M6106/15 -001	302-8	G	6	5	50	50	20	---	---	---	---	---	---	---	---	---	---	---	---	---	---	---	---	---
*MS24187-D2	302-9	D	See spec	1	50(NO) 25(NC)	50(NO) 25(NC)	50(NO) 25(NC)	--- ---	25(NO) 25(NC)	---	---	---	---	---	---	---	---	---	---	---	---	---	---	---
DPST CONTACTS - 2 FORM A																								
*MS24178-D1	302-11	D	See spec	1	55	40	40	---	55	---	35	---	---	---	---	---	---	---	---	---	---	---	---	---
DPST CONTACTS - 2 FORM A (MECHANICAL INTERLOCKED)																								
*MS25030-D1B	302-12	D	See spec	1	50	50	50	---	50	---	35	---	---	---	---	---	---	---	---	---	---	---	---	---
*MS25032-D1	302-13	D		1	200	100	150	---	150	---	100	---	---	---	---	---	---	---	---	---	---	---	---	---
*MS25031-D1B	302-14	D		1	100	80	80	---	75	---	65	---	---	---	---	---	---	---	---	---	---	---	---	---
DPDT CONTACTS - 2 FORM C																								
MS24149-D1	302-15	G	See spec	4	10	10	6.0	2.0	10	10	6.0	2.0	---	---	---	---	---	---	---	---	---	---	---	---
MS27401-13	302-40	"		"	"	"	"	"	"	"	"	"	"	"	"	"	"	"	"	"	"	"	"	"	"
MS27401-14	"	"	"	"	"	"	"	"	"	"	"	"	"	"	"	"	"	"	"	"	"	"	"	"
MS27401-23	"	"	"	"	"	"	"	"	"	"	"	"	"	"	"	"	"	"	"	"	"	"	"	"
MS27401-37	"	"	"	"	"	"	"	"	"	"	"	"	"	"	"	"	"	"	"	"	"	"	"	"
MS27401-41	"	"	"	"	"	"	"	"	"	"	"	"	"	"	"	"	"	"	"	"	"	"	"	"
MS27401-46	"	"	"	"	"	"	"	"	"	"	"	"	"	"	"	"	"	"	"	"	"	"	"	"
MS27401-47	"	"	"	"	"	"	"	"	"	"	"	"	"	"	"	"	"	"	"	"	"	"	"	"
MS25273-D1	302-16	"	1	"	"	6	"	"	"	6	"	"	"	6	"	"	6	4	3	1.5	6	4	3	1.5
MS25323-D2	302-17	"	"	"	"	6	"	"	"	6	"	"	"	6	"	"	6	4	3	1.5	6	4	3	1.5
MS25321-D2	302-18	"	"	"	5	3	1.5	0.8	5	3	1.5	0.8	"	---	"	"	4	2	1	0.6	---	---	---	---
MS25395-D1	302-41	"	"	See spec	5	3	1.5	0.8	5	3	1.5	0.8	"	---	"	"	4	2	1	0.6	"	"	"	"
		"	"									2	10	4	3	2	---	---	---	---	"	"	"	"
MS27245-1	302-42	"	"	6	10	4	3.0	2.0	10	40	3	"	"	"	"	"	"	"	"	"	"	"	"	"
MS27245-3	302-42	"	"	"	"	"	"	"	"	4	"	"	"	"	"	"	"	"	"	"	"	"	"	"
MS27247-1	302-19	"	"	"	"	"	"	"	"	"	"	"	"	"	"	"	"	"	"	"	"	"	"	"
MS27247-2	302-19	"	"	"	"	"	"	"	"	"	"	"	"	"	"	"	"	"	"	"	"	"	"	"

See footnotes at end of table.

Downloaded from http://www.everyspec.com

TABLE 302.I. Relays, EM, dc operated, part numbers and characteristics - Continued.

Part number	Figure number	Operating temp range (see table I)	Shock (see table II)	Vibration (see table III)	System voltage and frequency-contact current in amperes																			
					28 V dc				400 Hz								50/60 Hz							
									115 V 1-phase				115/200 V 3-phase				115 V 1-phase				115/200 V 3-phase			
					Resistive	Inductive	Motor	Lamp	Resistive	Inductive	Motor	Lamp	Resistive	Inductive	Motor	Lamp	Resistive	Inductive	Motor	Lamp	Resistive	Inductive	Motor	Lamp
DPDT CONTACTS - 2 FORM C																								
M6106/27																								
-001	101-11	G	See spec	See spec	5	3	2	1	5	5	3	1	5	5	3	1	---	---	---	---	---	---	---	---
-005	"	"	"	"	"	"	"	"	"	"	"	"	"	"	"	"	"	"	"	"	"	"	"	"
-009	"	"	"	"	"	"	"	"	"	"	"	"	"	"	"	"	"	"	"	"	"	"	"	"
-013	"	"	"	"	"	"	"	"	"	"	"	"	"	"	"	"	"	"	"	"	"	"	"	"
-017	"	"	"	"	"	"	"	"	"	"	"	"	"	"	"	"	"	"	"	"	"	"	"	"
-021	"	"	"	"	"	"	"	"	"	"	"	"	"	"	"	"	"	"	"	"	"	"	"	"
-025	"	"	"	"	"	"	"	"	"	"	"	"	"	"	"	"	"	"	"	"	"	"	"	"
-029	"	"	"	"	"	"	"	"	"	"	"	"	"	"	"	"	"	"	"	"	"	"	"	"
-033	"	"	"	"	"	"	"	"	"	"	"	"	"	"	"	"	"	"	"	"	"	"	"	"
-037	"	"	"	"	"	"	"	"	"	"	"	"	"	"	"	"	"	"	"	"	"	"	"	"
DPDT CONTACTS - 2 FORM C - WITH COIL SUPPRESSION																								
M6106/27																								
-003	101-13	G	See spec	See spec	5	3	2	1	5	5	3	1	5	5	3	1	---	---	---	---	---	---	---	---
-007	"	"	"	"	"	"	"	"	"	"	"	"	"	"	"	"	"	"	"	"	"	"	"	"
-011	"	"	"	"	"	"	"	"	"	"	"	"	"	"	"	"	"	"	"	"	"	"	"	"
-015	"	"	"	"	"	"	"	"	"	"	"	"	"	"	"	"	"	"	"	"	"	"	"	"
-019	"	"	"	"	"	"	"	"	"	"	"	"	"	"	"	"	"	"	"	"	"	"	"	"
-023	"	"	"	"	"	"	"	"	"	"	"	"	"	"	"	"	"	"	"	"	"	"	"	"
-027	"	"	"	"	"	"	"	"	"	"	"	"	"	"	"	"	"	"	"	"	"	"	"	"
-031	"	"	"	"	"	"	"	"	"	"	"	"	"	"	"	"	"	"	"	"	"	"	"	"
-035	"	"	"	"	"	"	"	"	"	"	"	"	"	"	"	"	"	"	"	"	"	"	"	"
-039	"	"	"	"	"	"	"	"	"	"	"	"	"	"	"	"	"	"	"	"	"	"	"	"
MS27401																								
-25	302-40	"	6	9	10	8	4.0	2.0	10	8	4.0	2.0	10	8	4.0	2.0	---	---	---	---	---	---	---	---
-26	"	"	"	"	"	"	"	"	"	"	"	"	"	"	"	"	"	"	"	"	"	"	"	"
-27	"	"	"	"	"	"	"	"	"	"	"	"	"	"	"	"	"	"	"	"	"	"	"	"
-39	"	"	"	"	"	"	"	"	"	"	"	"	"	"	"	"	"	"	"	"	"	"	"	"
-43	"	"	"	"	"	"	"	"	"	"	"	"	"	"	"	"	"	"	"	"	"	"	"	"
-48	"	"	"	"	"	"	"	"	"	"	"	"	"	"	"	"	"	"	"	"	"	"	"	"
-49	"	"	"	"	"	"	"	"	"	"	"	"	"	"	"	"	"	"	"	"	"	"	"	"

See footnotes at end of table.

Downloaded from http://www.everyspec.com

TABLE 302.I. Relays, EM, dc operated, part numbers and characteristics - Continued.

Part number	Figure number	Operating temp range (see table I)	Shock (see table II)	Vibration (see table III)	System voltage and frequency-contact current in amperes																			
					28 V dc				400 Hz								50/60 Hz							
									115 V 1-phase				115/200 V 3-phase				115 V 1-phase				115/200 V 3-phase			
					Resistive	Inductive	Motor	Lamp	Resistive	Inductive	Motor	Lamp	Resistive	Inductive	Motor	Lamp	Resistive	Inductive	Motor	Lamp	Resistive	Inductive	Motor	Lamp
3PST CONTACTS - 3 FORM A																								
MS27418-1B	302-45	G	1	See spec	25	15	20	10.0	25	25	20	10	25	25	12	10	25	25	20	10	25	25	12	10
MS27418-2B	302-45	G	1	"	25	15	"	"	25	25	20	10	25	25	12	10	25	25	20	10	25	25	12	10
MS27751-3 2/	302-21	D	See spec	"	50	20	"	"	60	60	40	15	60	60	40	15	---	---	---	---	---	---	---	---
MS27751-5 1/ 2/	"	"	"	"	"	"	"	"	"	"	"	"	"	"	"	"	"	"	"	"	"	"	"	"
MS27751-13 2/	"	"	"	"	"	"	"	"	"	"	"	"	"	"	"	"	"	"	"	"	"	"	"	"
MS27751-15 1/ 2/	"	"	"	"	"	"	"	"	"	"	"	"	"	"	"	"	"	"	"	"	"	"	"	"
MS27706-1B	302-47	G	"	4	20	15	"	5.0	20	20	20	5	20	20	20	5	15	20	12	5	15	20	12	5
MS27706-2B	302-47	"	"	4	20	15	"	5.0	20	20	20	5	20	20	20	5	15	20	12	5	15	20	12	5
M6106/10																								
-001	302-38	"	"	See spec	---	---	---	---	60	60	40	20	60	60	40	20	---	---	---	---	---	---	---	---
-002 1/	302-38	"	"	See spec	---	---	---	---	60	60	40	20	60	60	40	20	---	---	---	---	---	---	---	---
3PST CONTACTS - 3 FORM A - WITH COIL SUPPRESSION																								
M6106/10 -005	302-38	G	See spec	See spec	---	---	---	---	60	60	40	20	60	60	40	20	---	---	---	---	---	---	---	---
3PST CONTACTS - 3 FORM A - WITH SPDT AUXILIARY																								
M6106/13																								
-001	302-60	G	6	9	25	12	10	5	25	15	10	5	25	15	10	5	---	---	---	---	---	---	---	---
-002	302-60	G	6	9	25	12	10	5	25	15	10	5	25	15	10	5	---	---	---	---	---	---	---	---
3PST CONTACTS - 3 FORM B																								
M6106/11																								
-001	302-50	G	See spec	See spec	---	---	---	---	60	60	40	20	60	60	40	20	---	---	---	---	---	---	---	---
-002 1/	302-50	G	See spec	See spec	---	---	---	---	60	60	40	20	60	60	40	20	---	---	---	---	---	---	---	---
3PDT CONTACTS - 3 FORM C																								
M6106/9																								
-001	302-51	G	See spec	See spec	---	---	---	---	60	60	40	20	60	60	40	20	---	---	---	---	---	---	---	---
-002 1/	302-51	"	"	"	---	---	---	---	60	60	40	20	60	60	40	20	"	"	"	"	"	"	"	"
M6106/29																								
-001	302-57	"	"	"	10	6	4	2	10	8	4	2	10	8	4	2	"	"	"	"	"	"	"	"
-005	"	"	"	"	"	"	"	"	"	"	"	"	"	"	"	"	"	"	"	"	"	"	"	"
-009	"	"	"	"	"	"	"	"	"	"	"	"	"	"	"	"	"	"	"	"	"	"	"	"
-013	"	"	"	"	"	"	"	"	"	"	"	"	"	"	"	"	"	"	"	"	"	"	"	"
-017	"	"	"	"	"	"	"	"	"	"	"	"	"	"	"	"	"	"	"	"	"	"	"	"
-021	"	"	"	"	"	"	"	"	"	"	"	"	"	"	"	"	"	"	"	"	"	"	"	"
-025	"	"	"	"	"	"	"	"	"	"	"	"	"	"	"	"	"	"	"	"	"	"	"	"

See footnotes at end of table.

Downloaded from http://www.everyspec.com

TABLE 302.I. Relays, EM, dc operated, part numbers and characteristics - Continued.

Part number	Figure number	Operating temp range (see table I)	Shock (see table II)	Vibration (see table III)	System voltage and frequency-contact current in amperes																			
					28 V dc				400 Hz								50/60 Hz							
									115 V 1-phase				115/200 V 3-phase				115 V 1-phase				115/200 V 3-phase			
					Resistive	Inductive	Motor	Lamp	Resistive	Inductive	Motor	Lamp	Resistive	Inductive	Motor	Lamp	Resistive	Inductive	Motor	Lamp	Resistive	Inductive	Motor	Lamp
3PDT CONTACTS - 3 FORM C																								
M6106/29																								
-029	302-57	G	See spec	See spec	10	6	4	2	10	8	4	2	10	8	4	2	---	---	---	---	---	---	---	---
-033	302-57	"			10	6	4	2	10	8	4	2	10	8	4	2	"	"	"	"	"	"	"	"
MS27743-4	302-25	"	"	"	25	12	10	5	25	15	10	5	25	15	10	5	"	"	"	"	"	"	"	"
-5	"	"	"	"	"	"	"	"	"	"	"	"	"	"	"	"	"	"	"	"	"	"	"	"
-6	"	"	"	"	"	"	"	"	"	"	"	"	"	"	"	"	"	"	"	"	"	"	"	"
-16 3/	"	"	"	"	"	"	"	"	"	"	"	"	"	"	"	"	"	"	"	"	"	"	"	"
-17 3/	"	"	"	"	"	"	"	"	"	"	"	"	"	"	"	"	"	"	"	"	"	"	"	"
-18 3/	"	"	"	"	"	"	"	"	"	"	"	"	"	"	"	"	"	"	"	"	"	"	"	"
-22	"	"	"	"	"	"	"	"	"	"	"	"	"	"	"	"	"	"	"	"	"	"	"	"
-23	"	"	"	"	"	"	"	"	"	"	"	"	"	"	"	"	"	"	"	"	"	"	"	"
-24	"	"	"	"	"	"	"	"	"	"	"	"	"	"	"	"	"	"	"	"	"	"	"	"
-28	"	"	"	"	"	"	"	"	"	"	"	"	"	"	"	"	"	"	"	"	"	"	"	"
-29	"	"	"	"	"	"	"	"	"	"	"	"	"	"	"	"	"	"	"	"	"	"	"	"
-32 3/	"	"	"	"	"	"	"	"	"	"	"	"	"	"	"	"	"	"	"	"	"	"	"	"
-33 3/	"	"	"	"	"	"	"	"	"	"	"	"	"	"	"	"	"	"	"	"	"	"	"	"
MS27751-1	302-21	D	"	"	---	15	15	10	50	50	40	15	50	50	40	15	"	"	"	"	"	"	"	"
MS27751-7 1/2/	"	"	"	"	"	"	"	"	"	"	"	"	"	"	"	"	"	"	"	"	"	"	"	"
MS27751-9 1/2/	"	"	"	"	"	"	"	"	"	"	"	"	"	"	"	"	"	"	"	"	"	"	"	"
MS27751-11 2/	"	"	"	"	"	"	"	"	"	"	"	"	"	"	"	"	"	"	"	"	"	"	"	"
MS27751-17 1/2/	"	"	"	"	"	"	"	"	"	"	"	"	"	"	"	"	"	"	"	"	"	"	"	"
MS27751-19 1/2/	"	"	"	"	"	"	"	"	"	"	"	"	"	"	"	"	"	"	"	"	"	"	"	"
3PDT CONTACTS - 3 FORM C - WITH COIL SUPPRESSION																								
M6106/29																								
-003	302-57	G	See spec	See spec	10	6	4	2	10	8	4	2	10	8	4	2	---	---	---	---	---	---	---	---
-007	"	"	"	"	"	"	"	"	"	"	"	"	"	"	"	"	"	"	"	"	"	"	"	"
-011	"	"	"	"	"	"	"	"	"	"	"	"	"	"	"	"	"	"	"	"	"	"	"	"
-015	"	"	"	"	"	"	"	"	"	"	"	"	"	"	"	"	"	"	"	"	"	"	"	"
-019	"	"	"	"	"	"	"	"	"	"	"	"	"	"	"	"	"	"	"	"	"	"	"	"
-023	"	"	"	"	"	"	"	"	"	"	"	"	"	"	"	"	"	"	"	"	"	"	"	"
-027	"	"	"	"	"	"	"	"	"	"	"	"	"	"	"	"	"	"	"	"	"	"	"	"
-031	"	"	"	"	"	"	"	"	"	"	"	"	"	"	"	"	"	"	"	"	"	"	"	"
-035	"	"	"	"	"	"	"	"	"	"	"	"	"	"	"	"	"	"	"	"	"	"	"	"
MS27751-21	302-21	D	"	"	50	20	20	10	60	60	40	15	60	60	40	15	"	"	"	"	"	"	"	"
3PDT CONTACTS - 3 FORM K																								
MS27750-1 2/	302-30	D	See spec	See spec	25	15	15	10	50	50	30	15	50	50	30	15	---	---	---	---	---	---	---	---
MS27750-2 3/ 2/	302-30	D			25	15	15	10	50	50	30	15	50	50	30	15	---	---	---	---	---	---	---	---

See footnotes at end of table.

Downloaded from http://www.everyspec.com

TABLE 302.I. Relays, EM, dc operated, part numbers and characteristics - Continued.

Part number	Figure number	Operating temp range (see table I)	Shock (see table II)	Vibration (see table III)	System voltage and frequency-contact current in amperes																			
					28 V dc				400 Hz								50/60 Hz							
									115 V 1-phase				115/200 V 3-phase				115 V 1-phase				115/200 V 3-phase			
					Resistive	Inductive	Motor	Lamp	Resistive	Inductive	Motor	Lamp	Resistive	Inductive	Motor	Lamp	Resistive	Inductive	Motor	Lamp	Resistive	Inductive	Motor	Lamp
3PDT CONTACTS - 3 FORM K (MECHANICAL INTERLOCKED) (LOAD TRANSFER)																								
*MS24152-D1	302-26	D	See spec	See spec	25	25	25	---	25	25	25	---	25	25	25	---	---	---	---	---	---	---	---	---
3PST CONTACTS - 3 FORM X																								
MS24143																								
D1	302-52	G	See spec	See spec	25	25	25	---	25	25	25	---	25	25	25	---	25	---	15	---	25	---	15	---
D2 1/	302-52	"		"	25	25	25	"	25	25	25	"	25	25	25	"	"	"	15	"	"	"	15	"
MS24376																								
D1	302-53	"	"	"	50	50	50	"	50	50	50	"	50	50	50	"	"	"	20	"	"	"	20	"
D2 1/	302-53	"	"	"	50	50	50	"	50	50	50	"	50	50	50	"	"	"	"	"	"	"	"	"
MS24168-D1	302-20	"	"	"	100	100	100	"	100	---	100	"	100	---	100	"	50	"	"	"	50	"	"	"
MS24168-D2 1/	302-20	"	"	"	100	100	100	"	100	---	100	"	100	---	100	"	"	"	"	"	"	"	"	"
*MS24193-D1	302-22	D	"	1	50	50	50	"	50	50	50	"	50	50	50	"	"	"	"	"	"	"	"	"
MS27222-1	302-43	G	"	See spec	"	"	"	"	"	"	"	"	"	"	"	"	"	"	"	"	"	"	"	"
MS27222-2 1/	302-43	G	"		"	"	"	"	"	"	"	"	"	"	"	"								
*MS24192-D1	302-24	D	"	1	25	25	25	"	25	25	25	"	25	25	25	"	"	"	"	"	"	"	"	"
MS27997-D1	302-44	G	"	See spec	"	"	"	"	"	"	"	"	"	"	"	"	"	"	"	"	"	"	"	"
MS27997-D2 1/	302-44	"	"	"	"	"	"	"	"	"	"	"	"	"	"	"	"	"	"	"	"	"	"	"
MS21330-D2 1/	302-46	"	"	"	12	12	6	"	12	12	6	"	12	1[illegible]	6	"	"	"	"	"	"	"	"	"
MS27715-1 1/	302-10	"	"	"	150	100	100	"	150	100	100	"	150	100	100	"	100	"	"	"	"	"	"	"
MS27714-1 1/	302-23	"	"	"	75	75	75	"	75	75	75	"	75	75	75	"	50	"	"	"	"	"	"	"
4PDT CONTACTS - 4 FORM C																								
M6106/28																								
-001	302-58	G	See spec	See spec	5	3	2	1	5	5	3	1	5	5	3	1	---	---	---	---	---	---	---	---
-005	"	"	"	"	"	"	"	"	"	"	"	"	"	"	"	"	"	"	"	"	"	"	"	"
-009	"	"	"	"	"	"	"	"	"	"	"	"	"	"	"	"	"	"	"	"	"	"	"	"
-013	"	"	"	"	"	"	"	"	"	"	"	"	"	"	"	"	"	"	"	"	"	"	"	"
-017	"	"	"	"	"	"	"	"	"	"	"	"	"	"	"	"	"	"	"	"	"	"	"	"
-021	"	"	"	"	"	"	"	"	"	"	"	"	"	"	"	"	"	"	"	"	"	"	"	"
-025	"	"	"	"	"	"	"	"	"	"	"	"	"	"	"	"	"	"	"	"	"	"	"	"
-029	"	"	"	"	"	"	"	"	"	"	"	"	"	"	"	"	"	"	"	"	"	"	"	"
-033	"	"	"	"	"	"	"	"	"	"	"	"	"	"	"	"	"	"	"	"	"	"	"	"

See footnotes at end of table.

Downloaded from http://www.everyspec.com

number	number	range (see table I)	table II)	(see table III)	tive	tive			tive	tive			tive	tive			tive	tive			tive	tive		
4PDT CONTACTS - 4 FORM C - Continued																								
MS24568-D1	302-27	G	See spec	See spec	10	10	6	3	15	10	6	3	15	10	6	3	---	---	---	---	---	---	---	---
MS27254-2	302-48	"	"	6	"	"	5	"	10	"	5	"	10	"	5	"	"	"	"	"	"	"	"	"
MS27255-2	302-28	"	"	"	"	"	"	"	"	"	"	"	"	"	"	"	"	"	"	"	"	"	"	"
MS27255-4	302-28	"	"	"	"	"	"	"	"	"	"	"	"	"	"	"	"	"	"	"	"	"	"	"
MS27400	302-49	"	"	See spec	"	8	4	2	"	8	4	2	"	8	4	2	"	"	"	"	"	"	"	"
-9	"	"	"	"	"	"	"	"	"	"	"	"	"	"	"	"	"	"	"	"	"	"	"	"
-10	"	"	"	"	"	"	"	"	"	"	"	"	"	"	"	"	"	"	"	"	"	"	"	"
-21	"	"	"	"	"	"	"	"	"	"	"	"	"	"	"	"	"	"	"	"	"	"	"	"
-35	"	"	"	"	"	"	"	"	"	"	"	"	"	"	"	"	"	"	"	"	"	"	"	"
-40	"	"	"	"	"	"	"	"	"	"	"	"	"	"	"	"	"	"	"	"	"	"	"	"
-41	"	"	"	"	"	"	"	"	"	"	"	"	"	"	"	"	"	"	"	"	"	"	"	"
MS25271-D1	302-29	"	"	4	"	6	"	"	"	6	"	"	"	"	"	"	"	"	"	"	"	"	"	"
MS25327-D1	302-31	"	"	"	"	6	"	"	"	6	"	"	"	6	"	"	6	4	3	1.5	6	4	3	1.5
MS25267-D1	302-32	"	"	"	5	3	1.5	0.8	5	3	1.5	0.8	---	---	---	---	4	2	1	0.6	---	---	---	---
MS25325-D1	302-33	"	"	"	5	3	1.5	0.8	5	3	1.5	0.8	---	---	---	---	4	2	1	0.6	---	---	---	---
MS27709	302-59	"	"	"	10	8	4	2	10	8	4	2	10	8	4	2	---	---	---	---	---	---	---	---
-1	"	"	"	"	"	"	"	"	"	"	"	"	"	"	"	"	"	"	"	"	"	"	"	"
-2	"	"	"	"	"	"	"	"	"	"	"	"	"	"	"	"	"	"	"	"	"	"	"	"
-3	"	"	"	"	"	"	"	"	"	"	"	"	"	"	"	"	"	"	"	"	"	"	"	"
4PDT CONTACTS - 4 FORM C - WITH COIL SUPPRESSION																								
M6106/28																								
-003	302-58	G	See spec	See spec	5	3	2	1	5	5	3	1	5	5	3	1	---	---	---	---	---	---	---	---
-007	"	"	"	"	"	"	"	"	"	"	"	"	"	"	"	"	"	"	"	"	"	"	"	"
-011	"	"	"	"	"	"	"	"	"	"	"	"	"	"	"	"	"	"	"	"	"	"	"	"
-015	"	"	"	"	"	"	"	"	"	"	"	"	"	"	"	"	"	"	"	"	"	"	"	"
-019	"	"	"	"	"	"	"	"	"	"	"	"	"	"	"	"	"	"	"	"	"	"	"	"
-023	"	"	"	"	"	"	"	"	"	"	"	"	"	"	"	"	"	"	"	"	"	"	"	"
-027	"	"	"	"	"	"	"	"	"	"	"	"	"	"	"	"	"	"	"	"	"	"	"	"
-031	"	"	"	"	"	"	"	"	"	"	"	"	"	"	"	"	"	"	"	"	"	"	"	"
-035	"	"	"	"	"	"	"	"	"	"	"	"	"	"	"	"	"	"	"	"	"	"	"	"
MS27400																								
-17	302-49	G	"	"	10	8	4	2	10	8	4	2	10	8	4	2	"	"	"	"	"	"	"	"
-23	"	"	"	"	"	"	"	"	"	"	"	"	"	"	"	"	"	"	"	"	"	"	"	"
-24	"	"	"	"	"	"	"	"	"	"	"	"	"	"	"	"	"	"	"	"	"	"	"	"
-37	"	"	"	"	"	"	"	"	"	"	"	"	"	"	"	"	"	"	"	"	"	"	"	"
-42	"	"	"	"	"	"	"	"	"	"	"	"	"	"	"	"	"	"	"	"	"	"	"	"
-43	"	"	"	"	"	"	"	"	"	"	"	"	"	"	"	"	"	"	"	"	"	"	"	"

See footnotes at end of table.

Downloaded from http://www.everyspec.com

TABLE 302.I. Relays, EM, dc operated, part numbers and characteristics - Continued.

Part number	Figure number	Operating temp range (see table I)	Shock (see table II)	Vibration (see table III)	System voltage and frequency-contact current in amperes																			
					28 V dc				400 Hz								50/60 Hz							
									115 V 1-phase				115/200 V 3-phase				115 V 1-phase				115/200 V 3-phase			
					Resis-tive	Induc-tive	Motor	Lamp	Resis-tive	Induc-tive	Motor	Lamp	Resis-tive	Induc-tive	Motor	Lamp	Resis-tive	Induc-tive	Motor	Lamp	Resis-tive	Induc-tive	Motor	Lamp
6PDT CONTACTS - 6 FORM C																								
MS25329-D1	302-34	G	3	4	5	3	1.5	0.8	5	3	1.5	0.8	---	---	---	---	4	2	1	0.6	---	---	---	---
MS25269-D1	302-35	"	1	4	5	1.5	1.5	0.8	3	1.5	1.5	0.8	---	---	---	---	4	2	1	0.6	"	"	"	"
M6106/8-																								
-013	302-54	"	1	See spec	10	8	4	2	10	8	4	2	10	8	4	2	---	---	---	---	"	"	"	"
-014	302-54	"	1		10	8	4	2	10	8	4	2	10	8	4	2	---	---	---	---	"	"	"	"
6PDT CONTACTS - 6 FORM C - WITH COIL SUPPRESSION																								
M6106/8-																								
-009	302-54	G	1	See spec	10	8	4	2	10	8	4	2	10	8	4	2	---	---	---	---	---	---	---	---
-010	302-54	G	1		10	8	4	2	10	8	4	2	10	8	4	2	---	---	---	---	---	---	---	---

* Unsealed.

1/ Relay possesses auxiliary contacts (see specification).

2/ This relay is designed for load transfer; other relays should not be used to transfer loads.

3/ Has coil suppression.

Downloaded from http://www.everyspec.com

Downloaded from http://www.everyspec.com

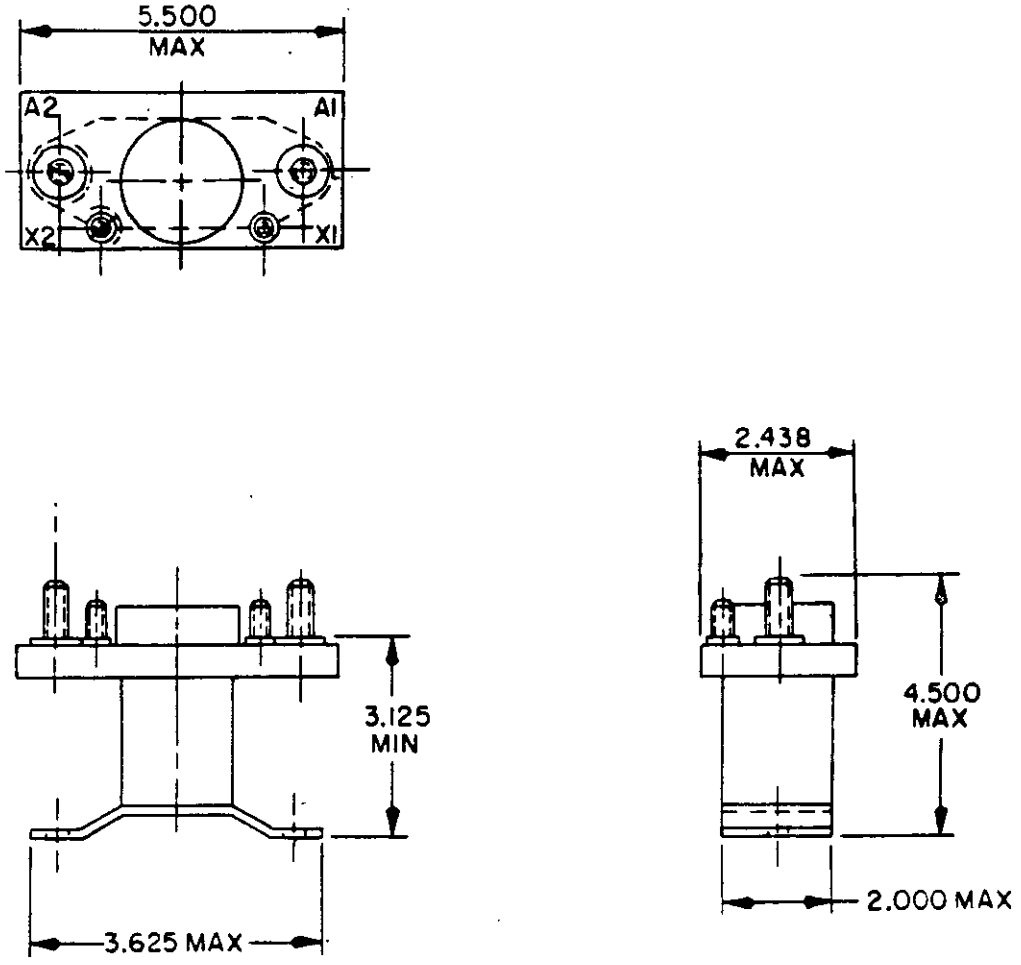

INCHES	MM
2.000	50.80
2.438	61.93
3.125	79.38
3.625	92.08
4.500	114.30
5.500	139.70

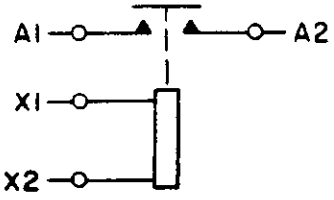

FIGURE 302-1. Relay, EM, unsealed, SPST, normally open, 400 amperes (MS24185-D1).

Downloaded from http://www.everyspec.com

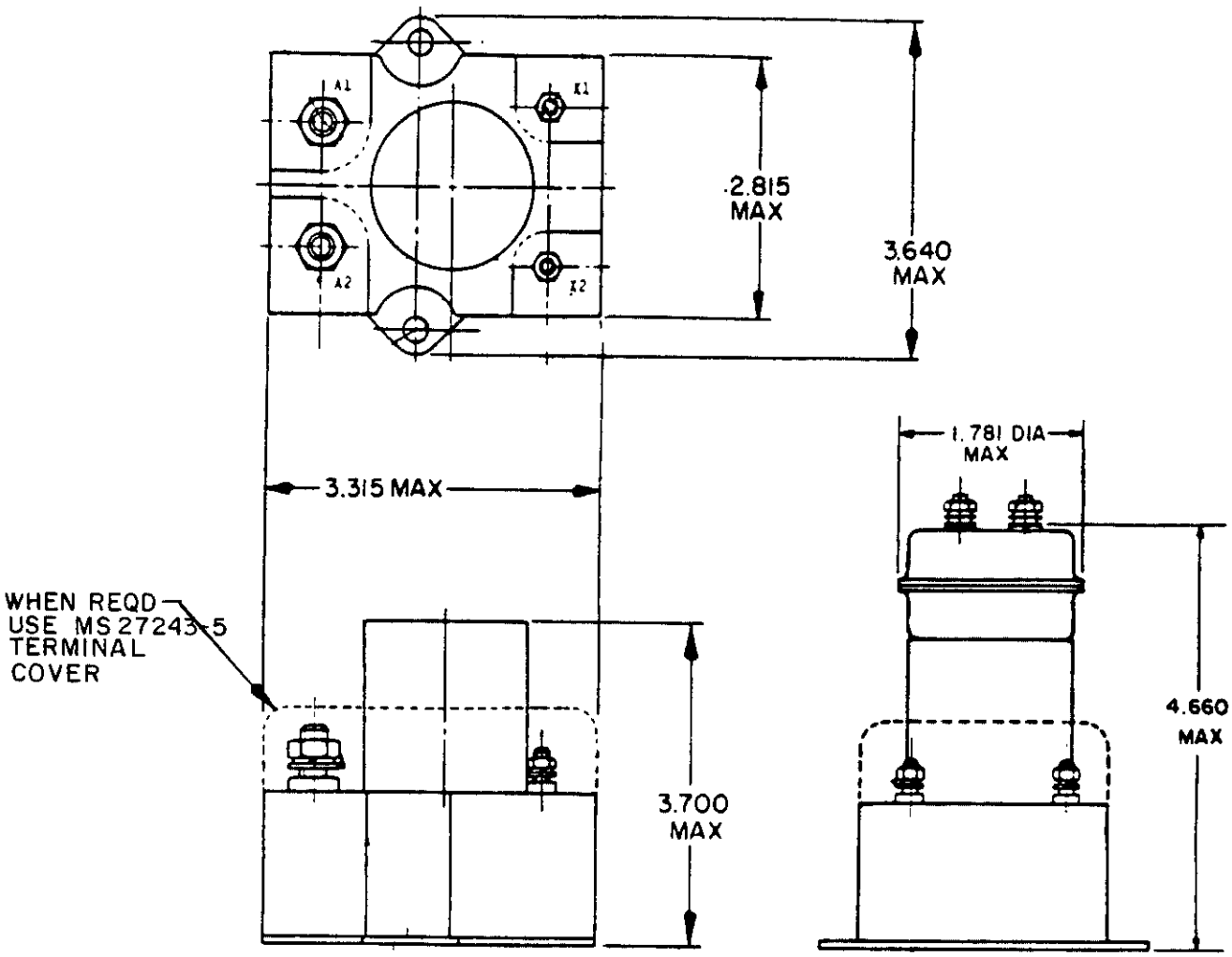

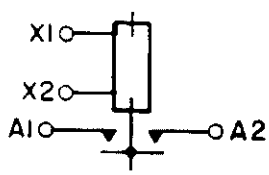

CIRCUIT

INCHES	MM
1.781	45.24
2.815	71.50
3.315	84.20
3.640	92.46
3.700	93.98
4.660	118.36

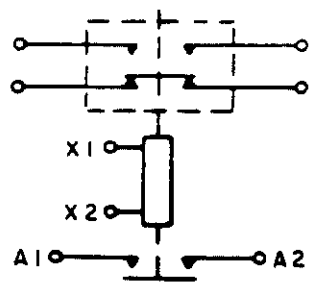

D2 CIRCUIT

FIGURE 302-2. Relay, EM, SPST, normally open, 300 amperes (MS24184).

Downloaded from http://www.everyspec.com

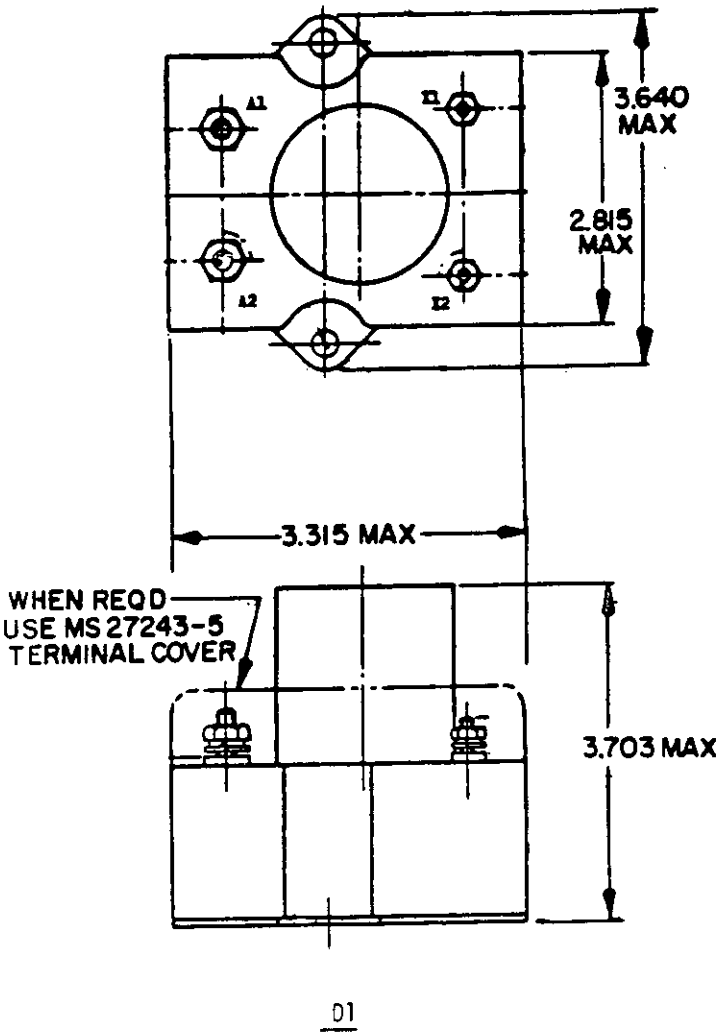

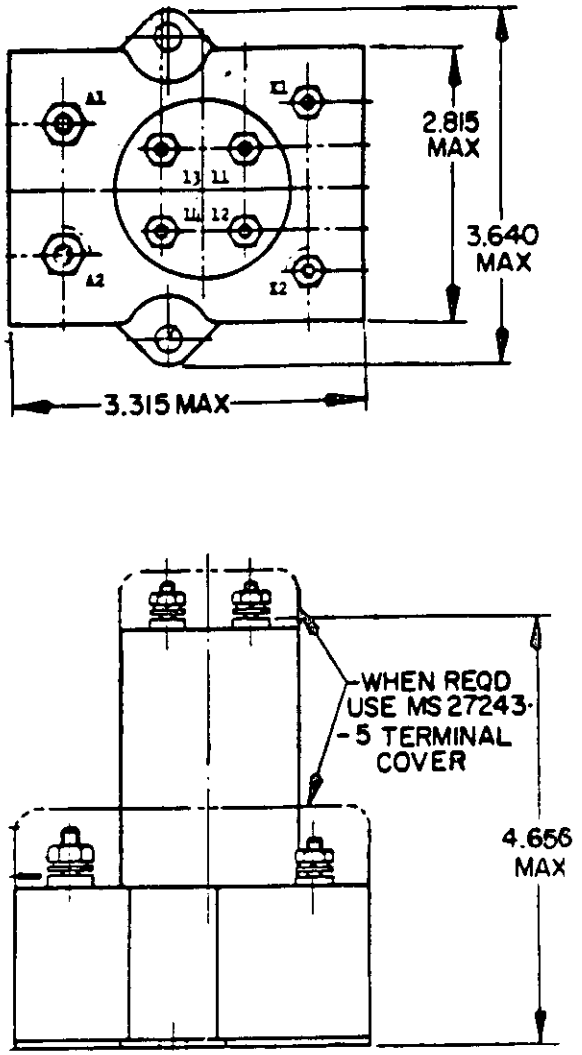

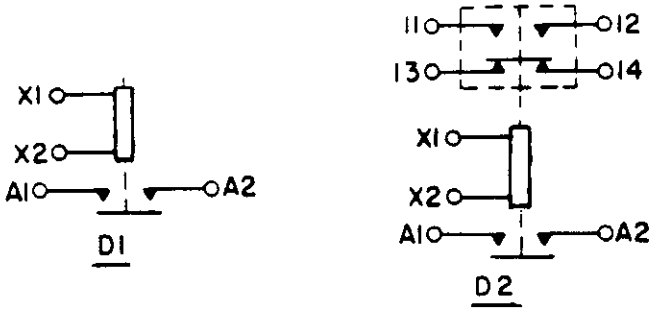

CIRCUIT DIAGRAM

INCHES	MM
.063	1.60
.750	19.05
2.063	52.40
2.815	71.50
3.315	84.20
3.640	92.46
3.703	94.06
4.656	118.26

FIGURE 302-3. Relay, EM, SPST, normally open, 200 amperes (MS24142).

Downloaded from http://www.everyspec.com

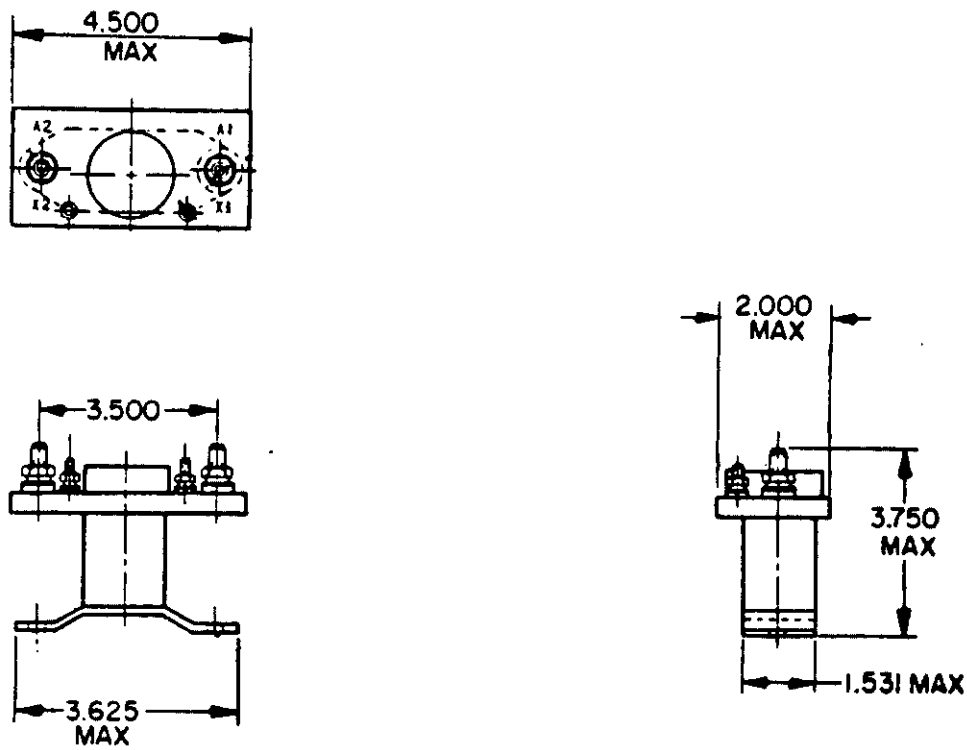

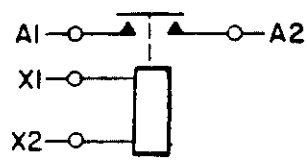

CIRCUIT

INCHES	MM
1.531	38.89
2.000	50.80
3.500	88.90
3.625	92.08
3.750	95.25
4.500	114.30

FIGURE 302-4. Relay, EM, unsealed, SPST, normally open, 200 amperes (MS24171-D1).

Downloaded from http://www.everyspec.com

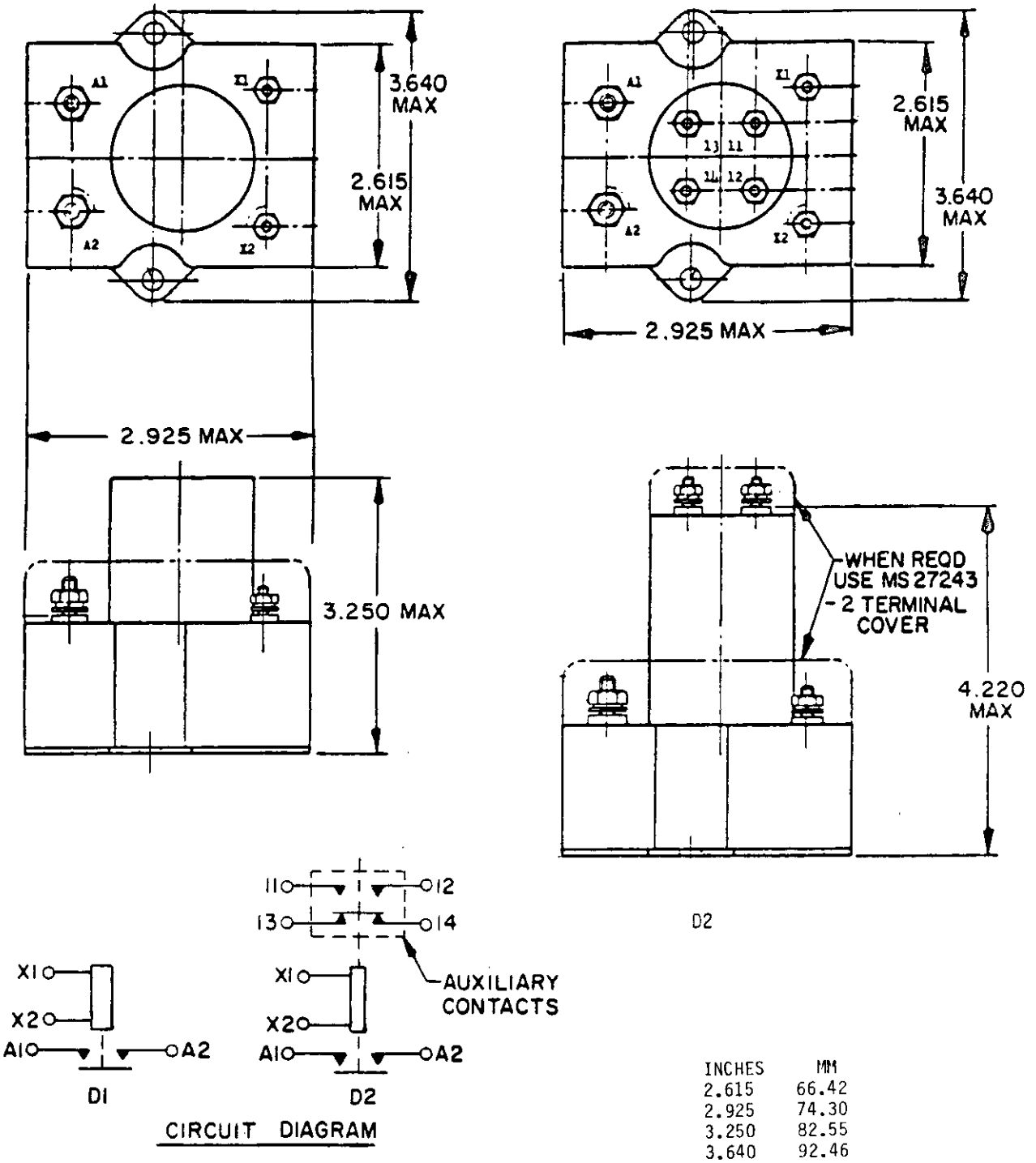

INCHES	MM
2.615	66.42
2.925	74.30
3.250	82.55
3.640	92.46
4.220	107.19

FIGURE 302-5. Relay, EM, SPST, normally open, 100 amperes (MS24141).

Downloaded from http://www.everyspec.com

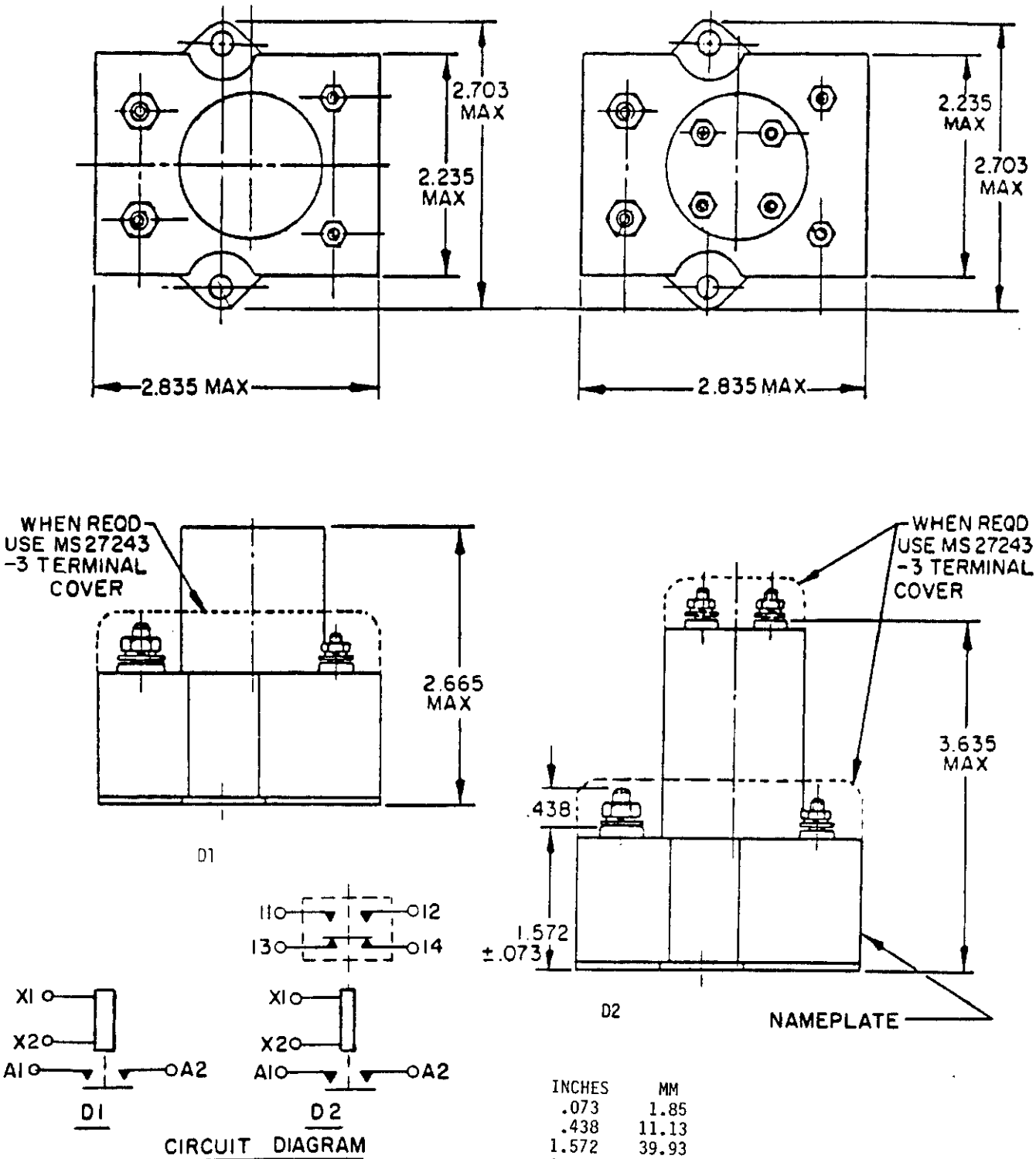

INCHES	MM
.073	1.85
.438	11.13
1.572	39.93
2.235	56.77
2.665	67.69
2.703	68.66
2.835	72.01
3.635	92.33

FIGURE 302-6. Relay, EM, SPST, normally open, 50 amperes (MS24140).

Downloaded from http://www.everyspec.com

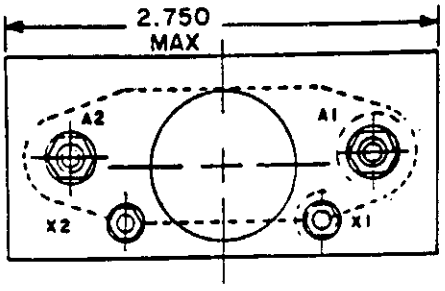

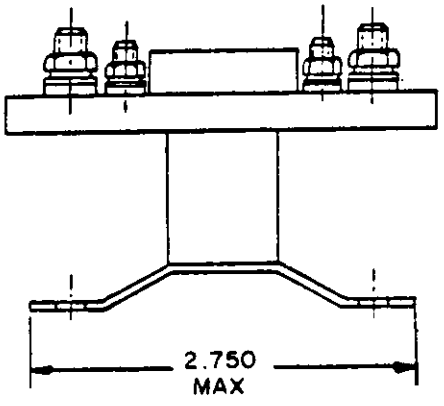

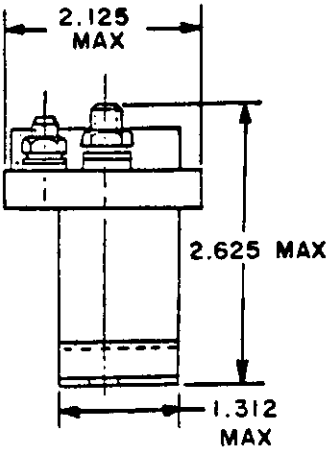

INCHES	MM
1.312	33.32
2.125	53.98
2.625	66.68
2.750	69.85

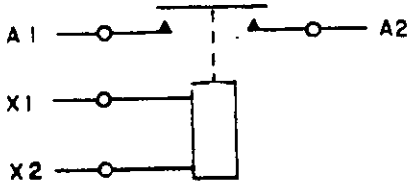

CIRCUIT

FIGURE 302-7. Relay, EM, unsealed, SPST, normally open, 50 amperes (MS24166-D1).

Downloaded from http://www.everyspec.com

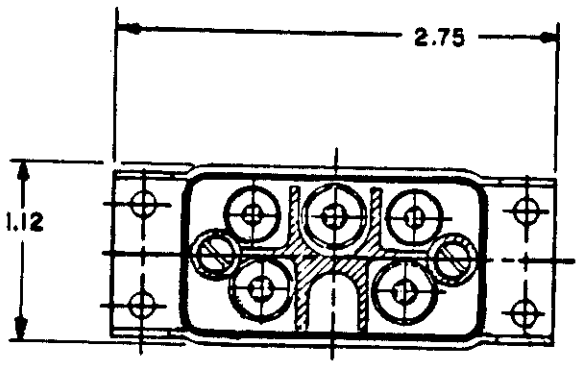

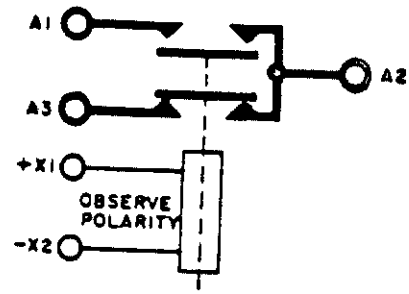

CIRCUIT

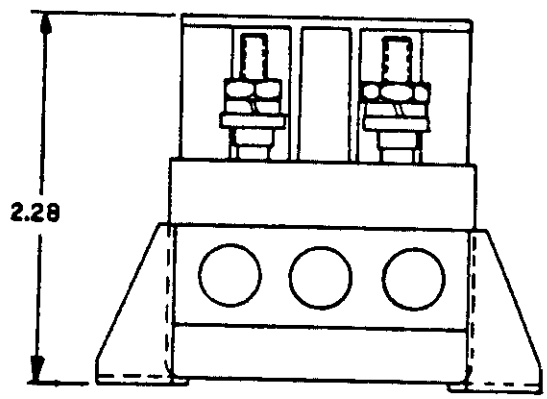

INCHES	MM
1.12	28.45
2.28	50.91
2.375	60.33
2.75	69.85

FIGURE 302-8. Relay, EM, SPDT, 50 amperes (MIL-R-6106/15).

Downloaded from http://www.everyspec.com

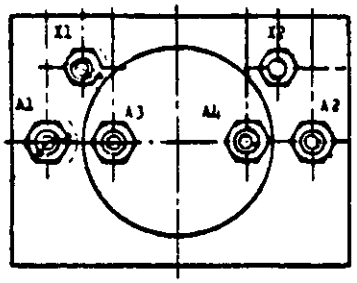

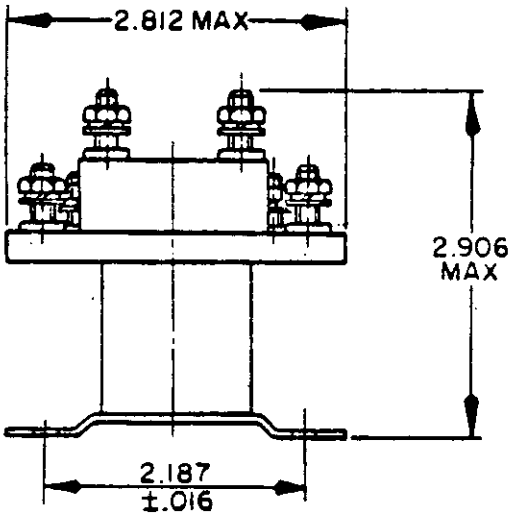

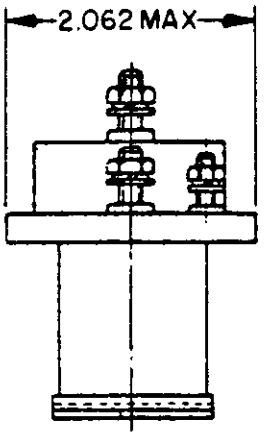

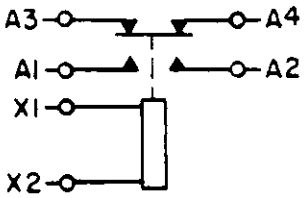

CIRCUIT DIAGRAM

INCHES	MM
.016	0.41
2.062	52.37
2.187	55.55
2.812	71.42
2.906	73.81

FIGURE 302-9. Relay, EM, unsealed, SPDT, 50 amperes normally open and 25 amperes normally closed (MS24187-D2).

Downloaded from http://www.everyspec.com

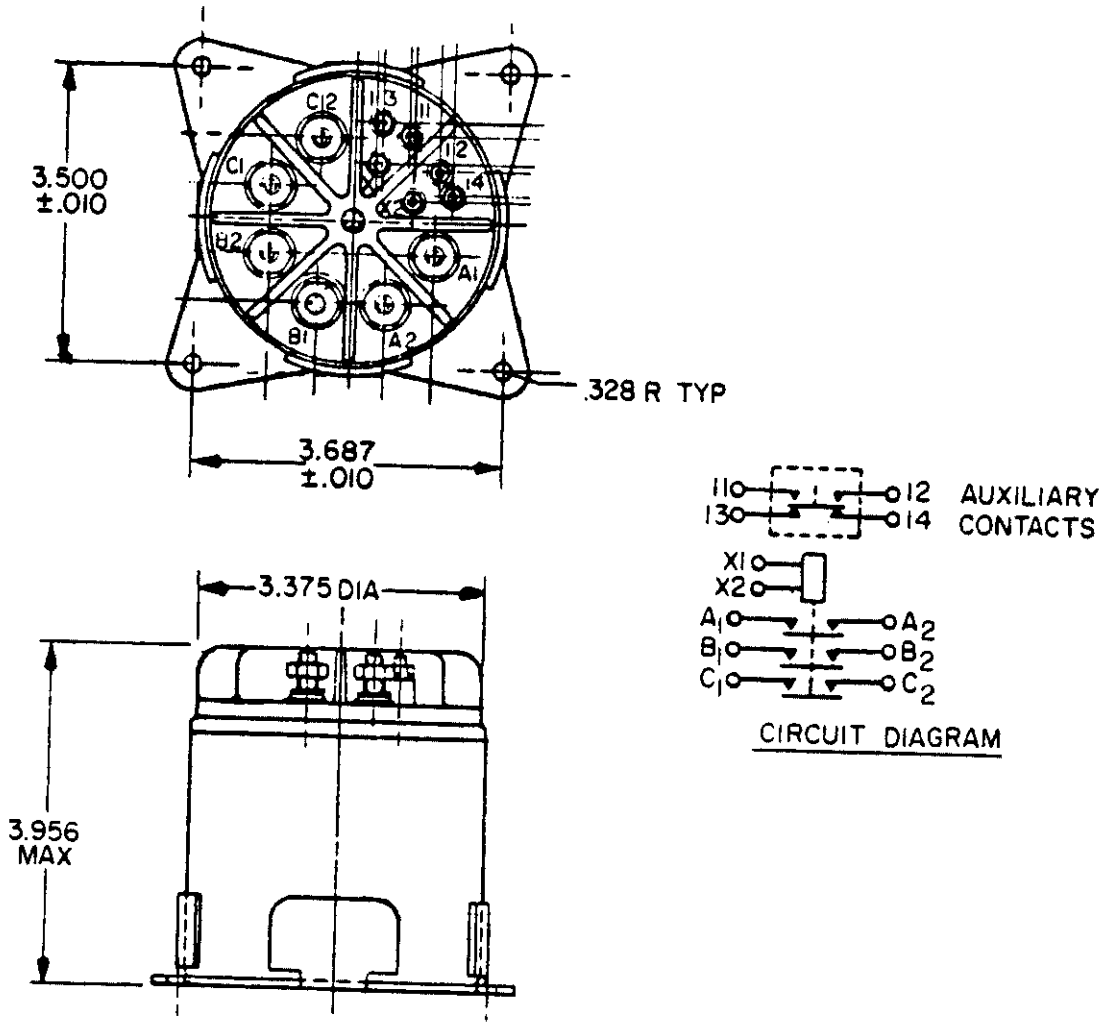

INCHES	MM
.010	0.25
.328	8.33
3.375	85.73
3.500	88.90
3.687	93.65
3.956	100.48

FIGURE 302-10. Relay, EM, coil and contacts individually sealed, 3PST, normally open, 150 amperes (MS27715).

Downloaded from http://www.everyspec.com

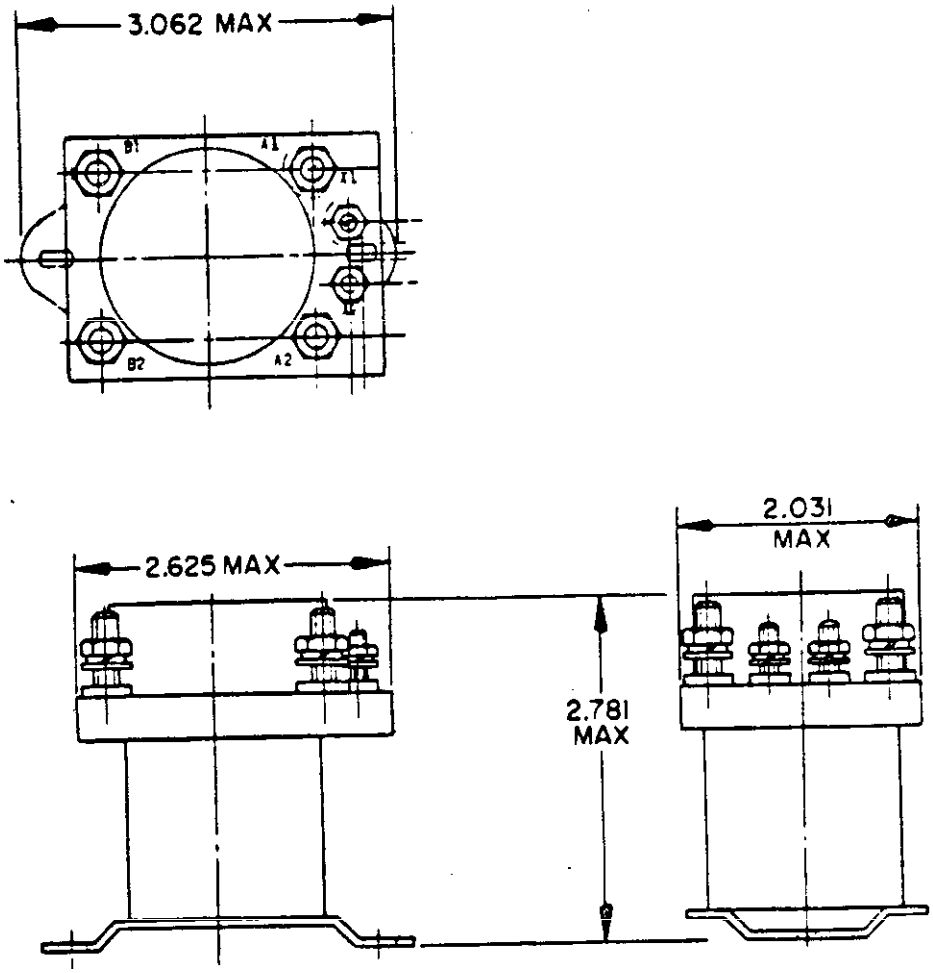

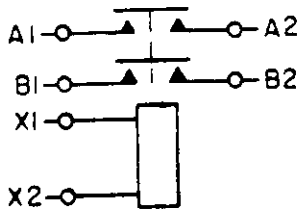

CIRCUIT DIAGRAM

INCHES	MM
2.031	51.59
2.625	66.68
2.781	70.64
3.062	77.77

FIGURE 302-11. Relay, EM, unsealed, DPST, normally open, 55 amperes (MS24178-D1).

Downloaded from http://www.everyspec.com

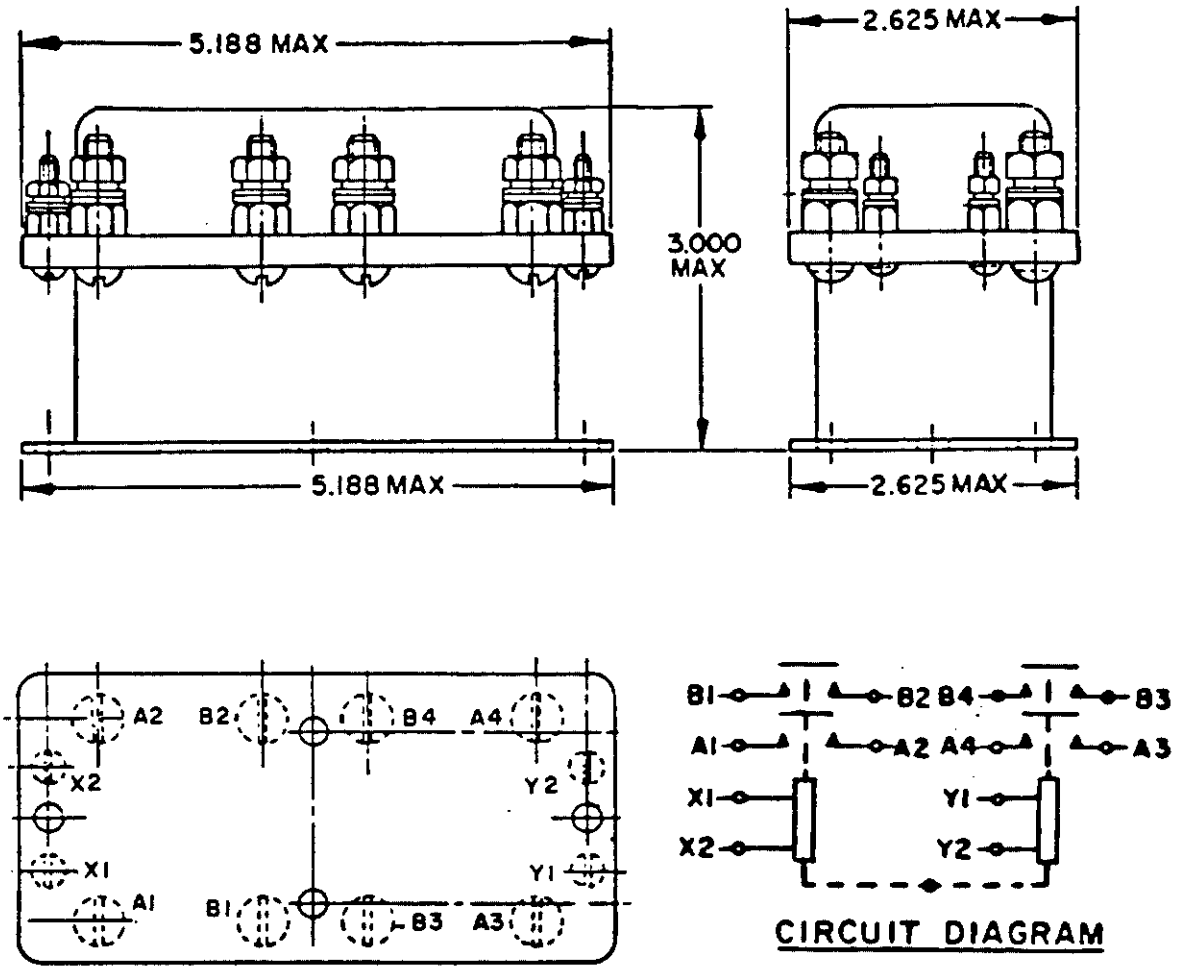

INCHES	MM
2.625	66.68
3.000	76.20
5.188	131.78

FIGURE 302-12. Relay, EM, 50 amperes, 2 PDT, N.O. type II, nonhermetically sealed, mechanically interlocked (MS25030-D1B).

Downloaded from http://www.everyspec.com

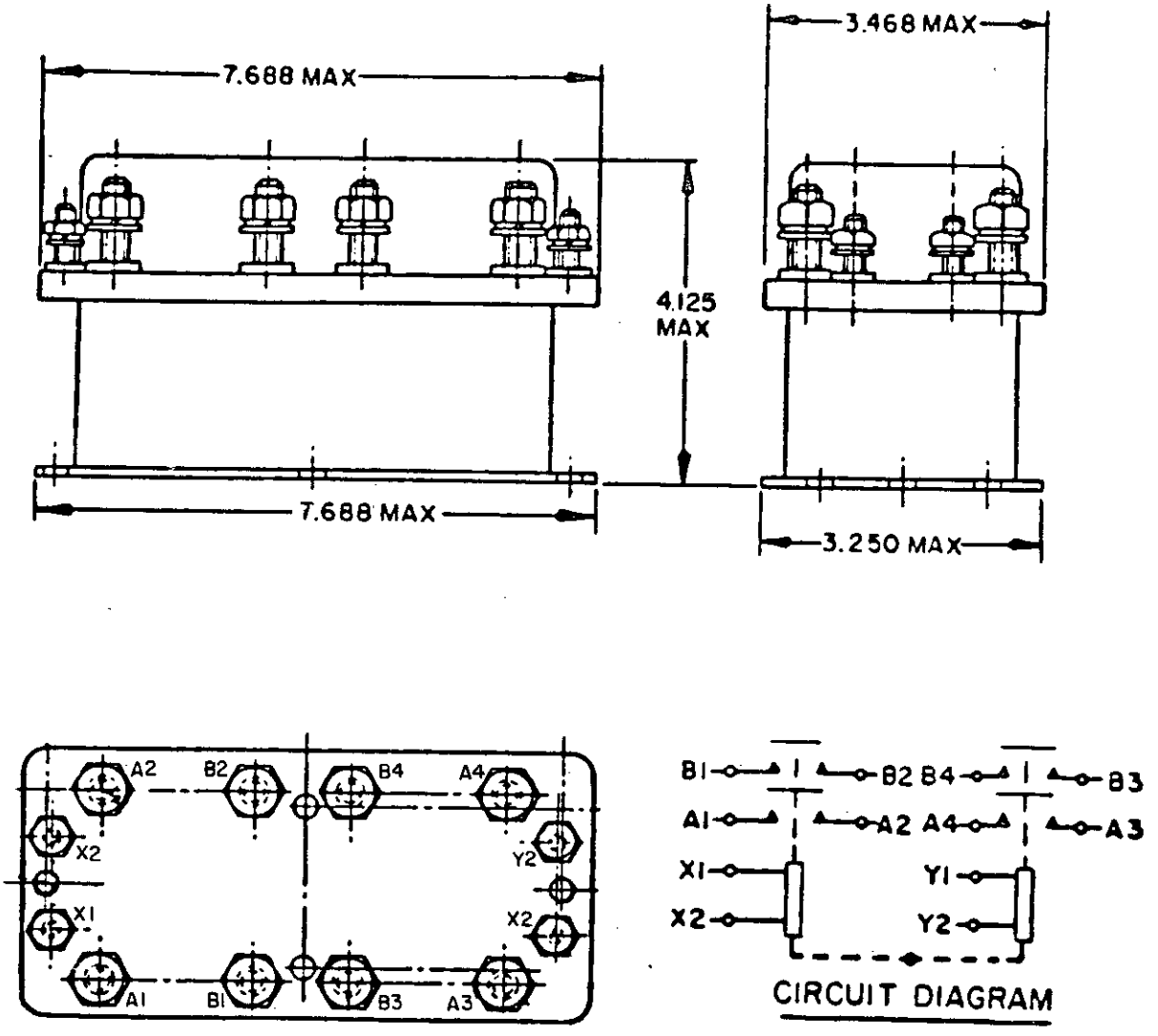

INCHES	MM
3.250	82.55
3.468	88.09
4.125	104.76
7.688	195.28

FIGURE 302-13. Relay, EM, 200 amperes, 2PDT, N.O. type II, nonhermetically sealed, mechanically interlocked (MS25032-D1).

Downloaded from http://www.everyspec.com

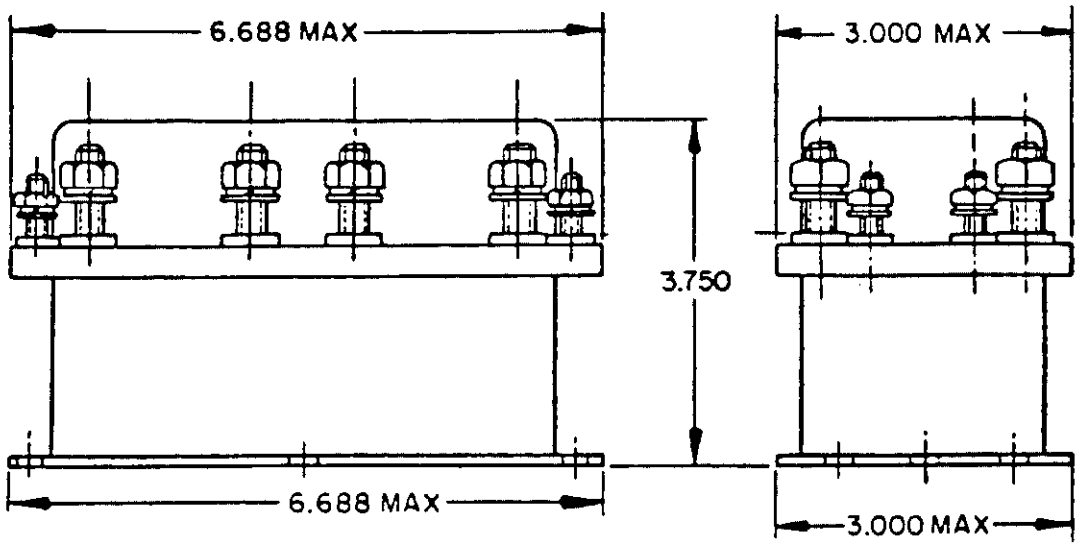

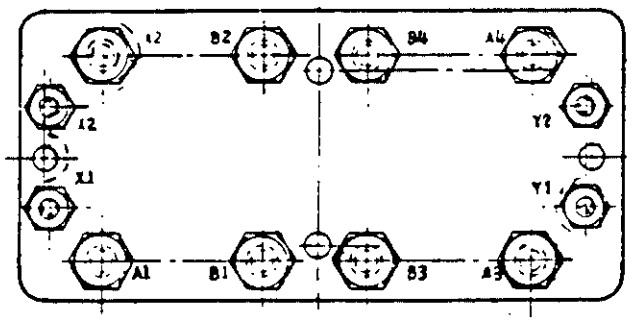

BOTTOM VIEW

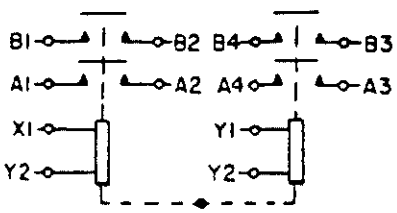

CIRCUIT DIAGRAM

INCHES	MM
.093	2.36
.531	13.49
3.000	76.20
3.750	95.25
6.688	169.88

FIGURE 302-14. Relay, EM, 100 amperes, 2PDT, N.O. type, nonhermetically sealed, mechanically interlocked (MS25031-D1B).

Downloaded from http://www.everyspec.com

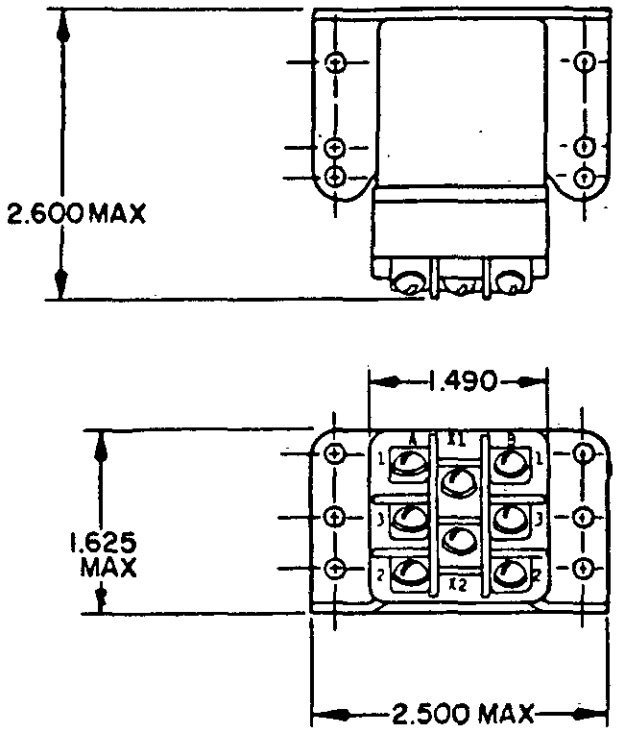

INCHES	MM
1.490	37.85
1.625	41.28
2.500	63.50
2.600	66.04

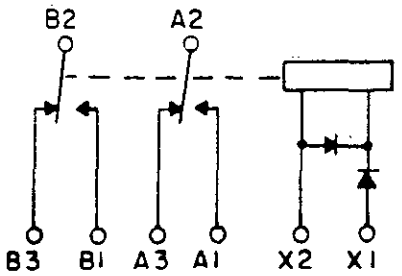

CIRCUIT DIAGRAM A1

THE USE OF DIODES ON AC RELAYS IS OPTIONAL

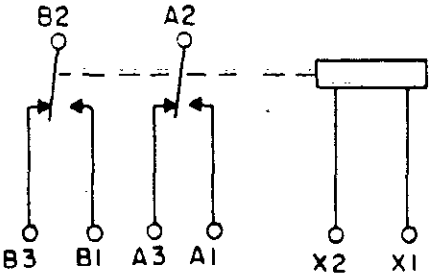

CIRCUIT DIAGRAM D1

FIGURE 302-15. Relay, EM, DPDT, 10 amperes (MS24149).

Downloaded from http://www.everyspec.com

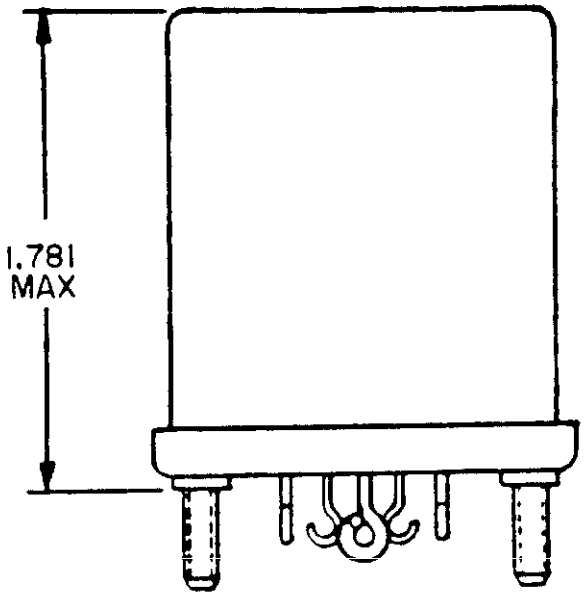

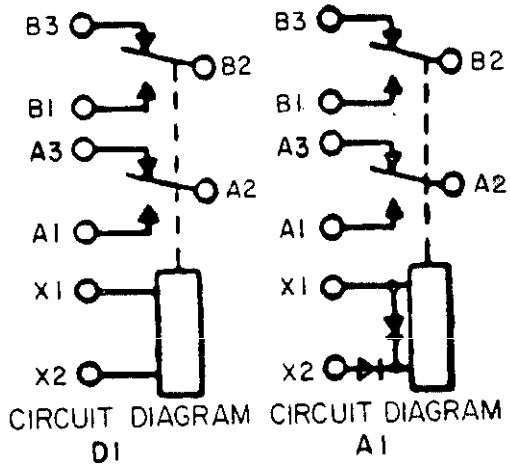

THE USE OF DIODES ON AC RELAYS IS OPTIONAL

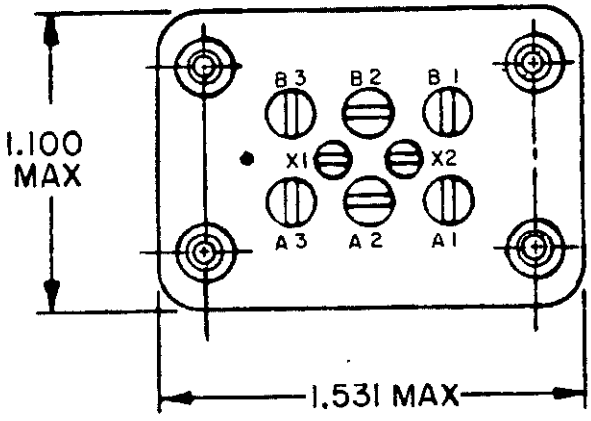

INCHES	MM
1.100	27.94
1.531	38.89
1.781	45.24

FIGURE 302-16. Relay, EM, DPDT, 10 amperes, solder terminals (MS25273).

Downloaded from http://www.everyspec.com

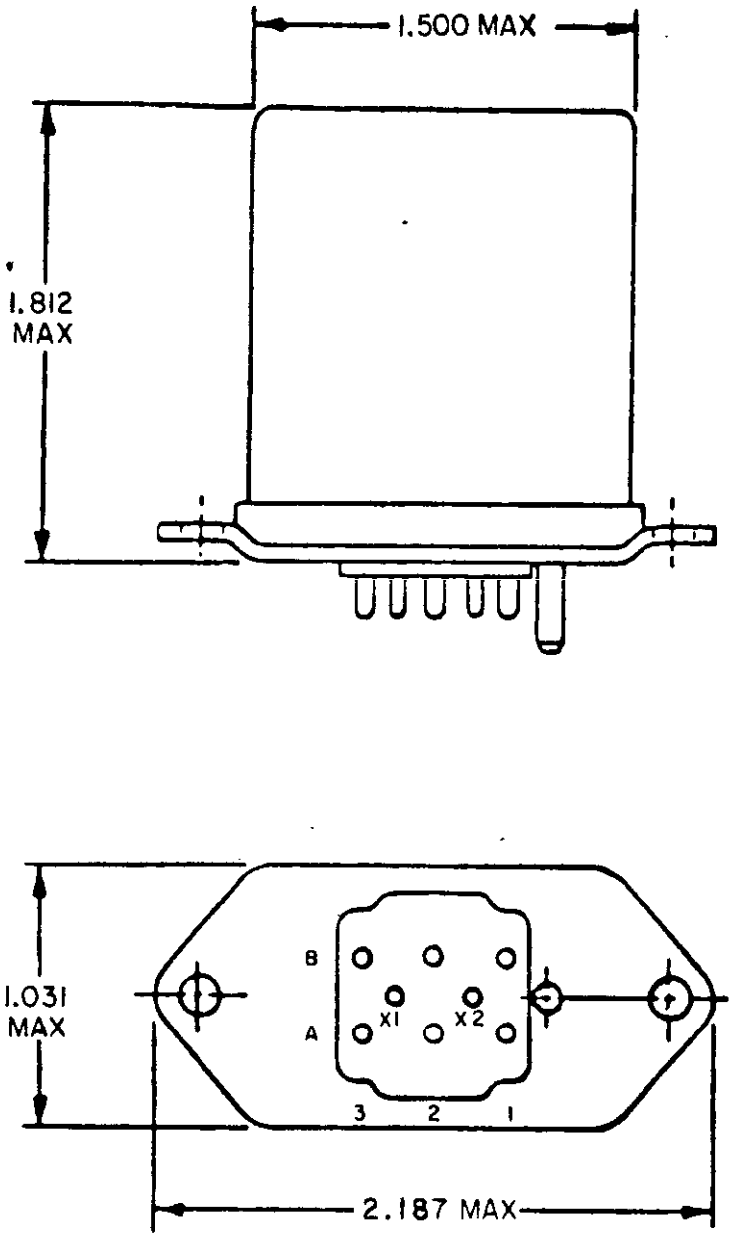

INCHES	MM
1.031	26.19
1.500	38.10
1.812	46.02
2.187	55.55

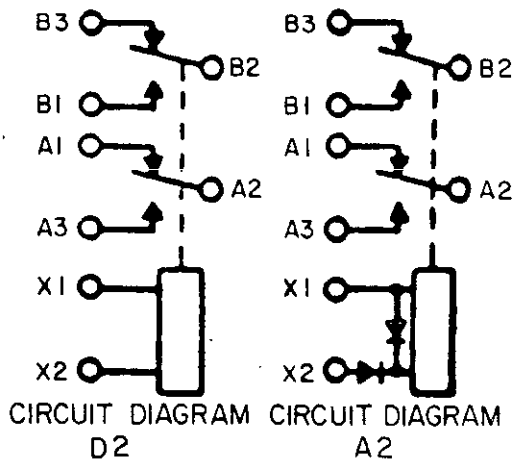

THE USE OF DIODES ON AC RELAYS IS OPTIONAL

FIGURE 302-17. Relay, EM, DPDT, 10 amperes, socket mounted (MS25323).

Downloaded from http://www.everyspec.com

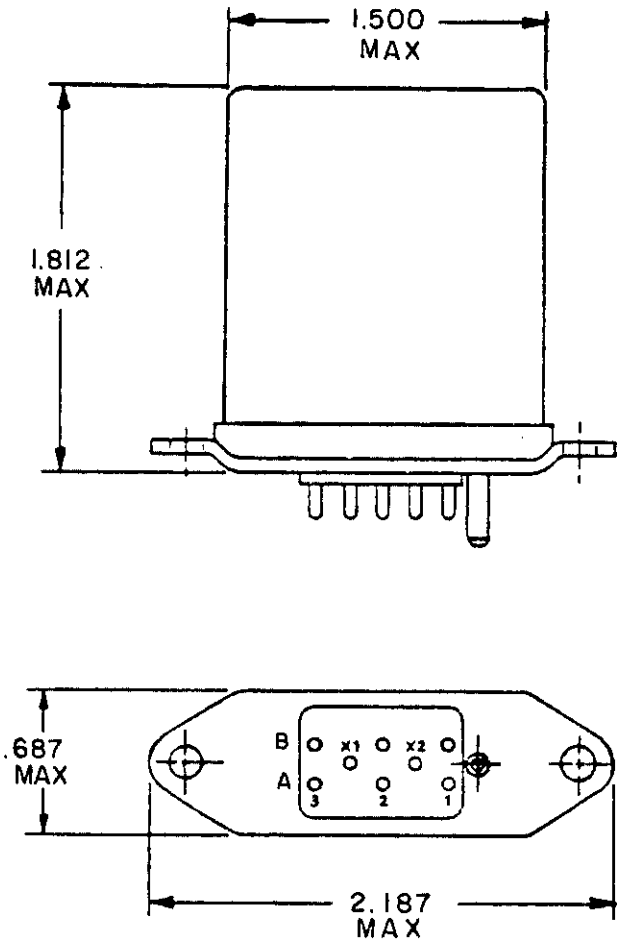

INCHES	MM
.687	17.45
1.500	38.10
1.812	46.02
2.187	55.55

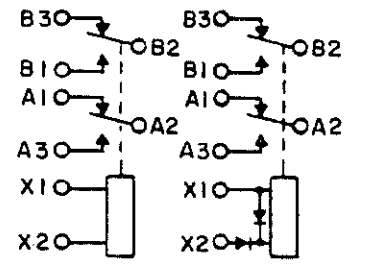

CIRCUIT DIAGRAM D2 CIRCUIT DIAGRAM A2

THE USE OF DIODES ON AC RELAYS IS OPTIONAL

FIGURE 302-18. Relay, EM, DPDT, 5 amperes, socket mounted (MS25321).

Downloaded from http://www.everyspec.com

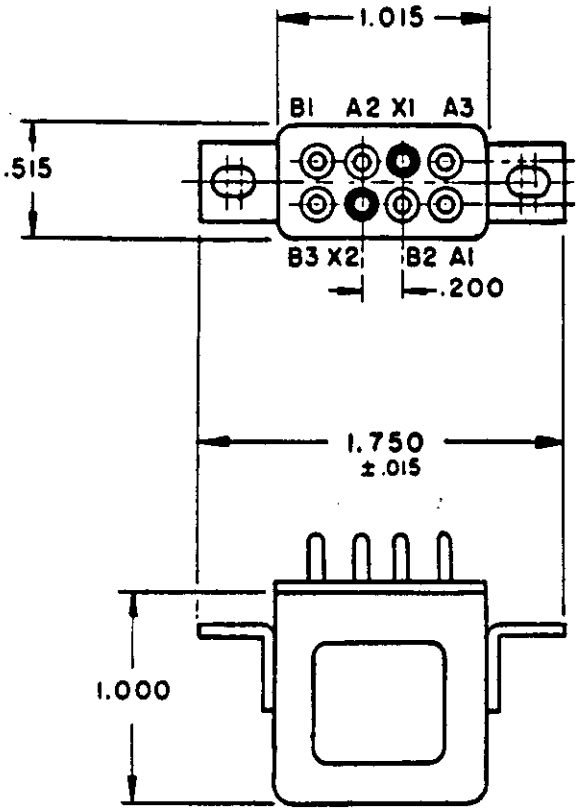

INCHES	MM
.015	0.38
.200	5.08
.515	13.08
1.000	25.40
1.015	25.78
1.750	44.45

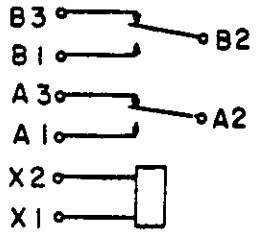

CIRCUIT DIAGRAM

FIGURE 302-19. Relay, EM, DPDT, 10 amperes (MS27247).

Downloaded from http://www.everyspec.com

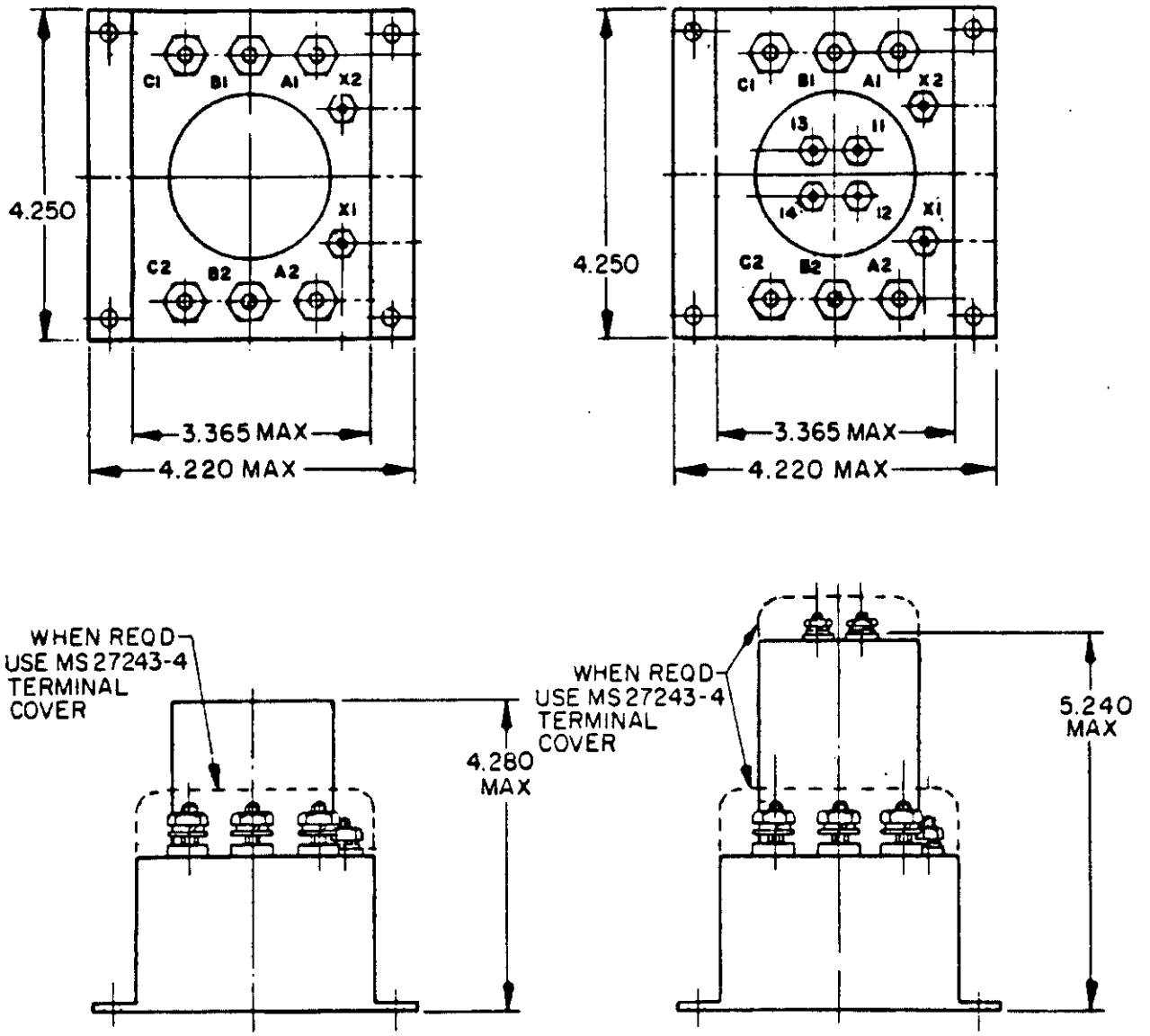

D1, A3

D2, A4

INCHES	MM
3.365	85.47
4.220	107.19
4.250	107.95
4.280	108.71
5.240	133.10

FIGURE 302-20. Relay, EM, 3PST, normally open, 100 amperes (MS24168).

Downloaded from http://www.everyspec.com

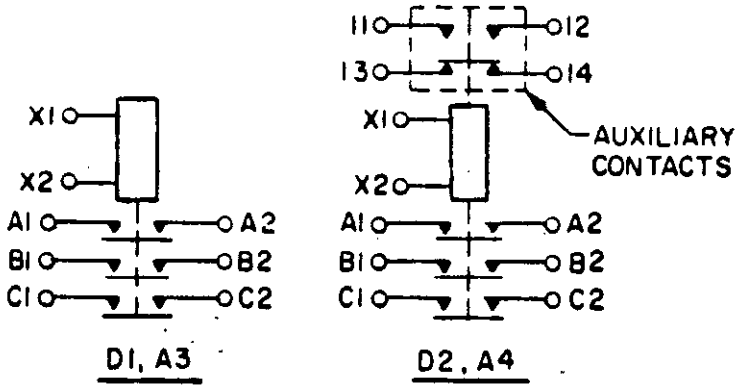

CIRCUIT DIAGRAM

FIGURE 302-20. Relay, EM, 3PST, normally open, 100 amperes (MS24168) - Continued.

Downloaded from http://www.everyspec.com

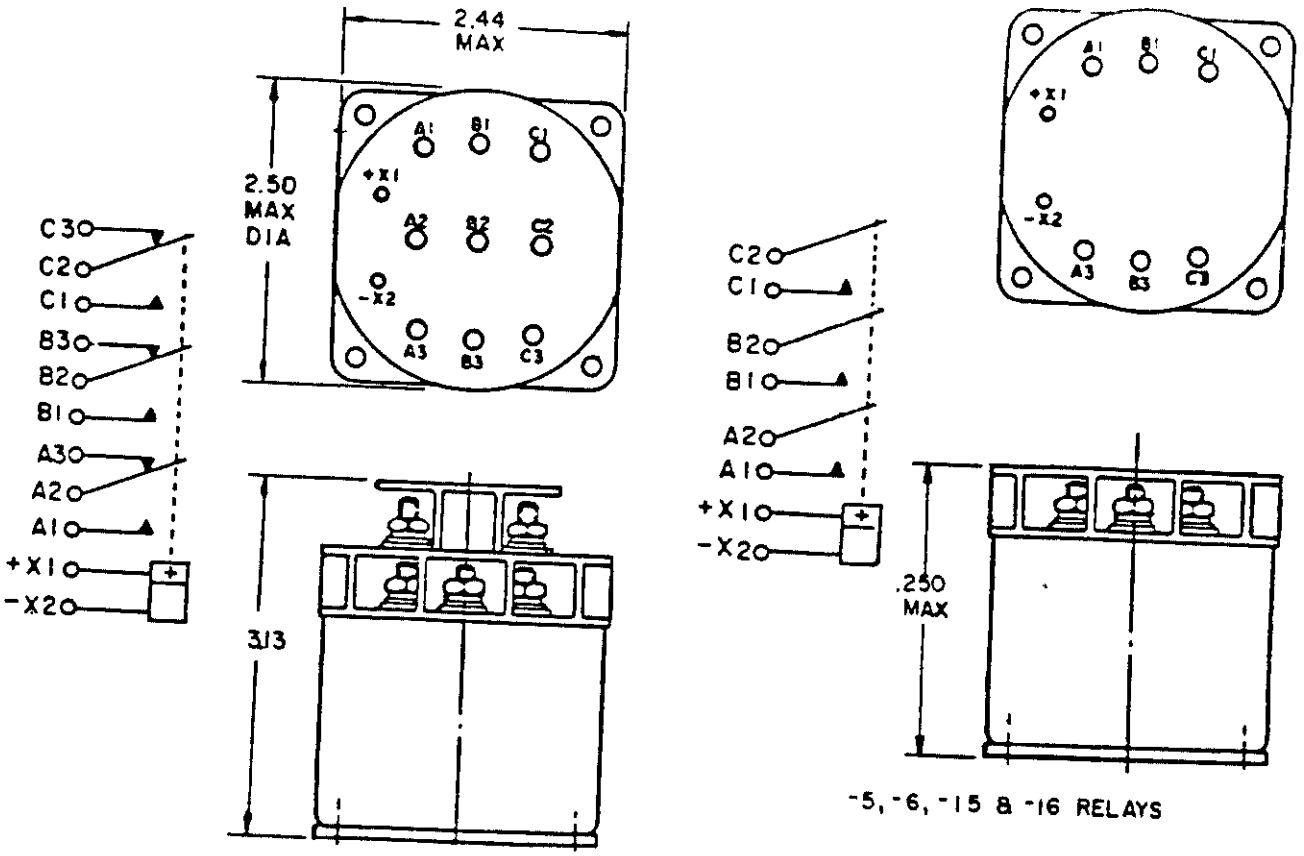

INCHES	MM
2.44	61.98
2.50	63.50
3.13	79.50

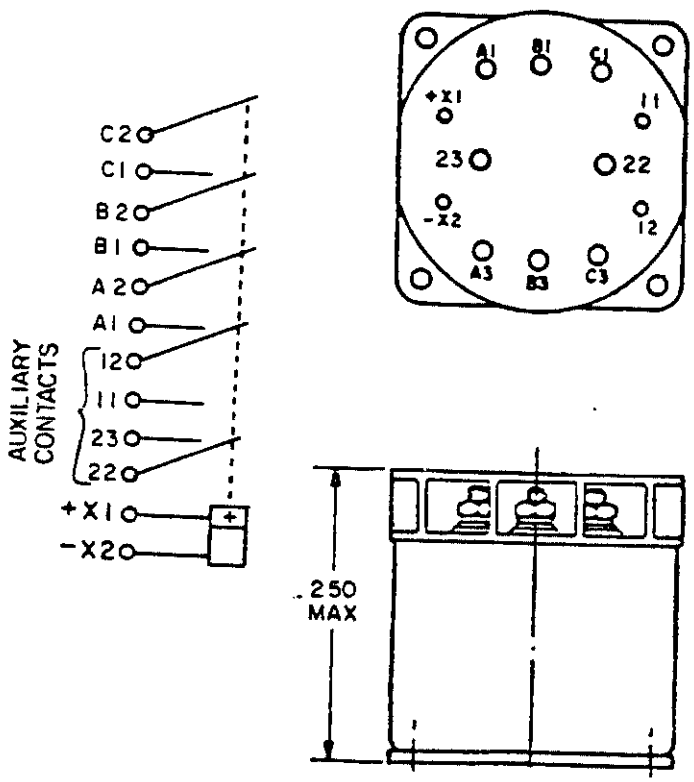

FIGURE 302-21. Relay, EM, 3PDT or 3PST contacts, 50 amperes, permanent magnet drive (MS27751).

Downloaded from http://www.everyspec.com

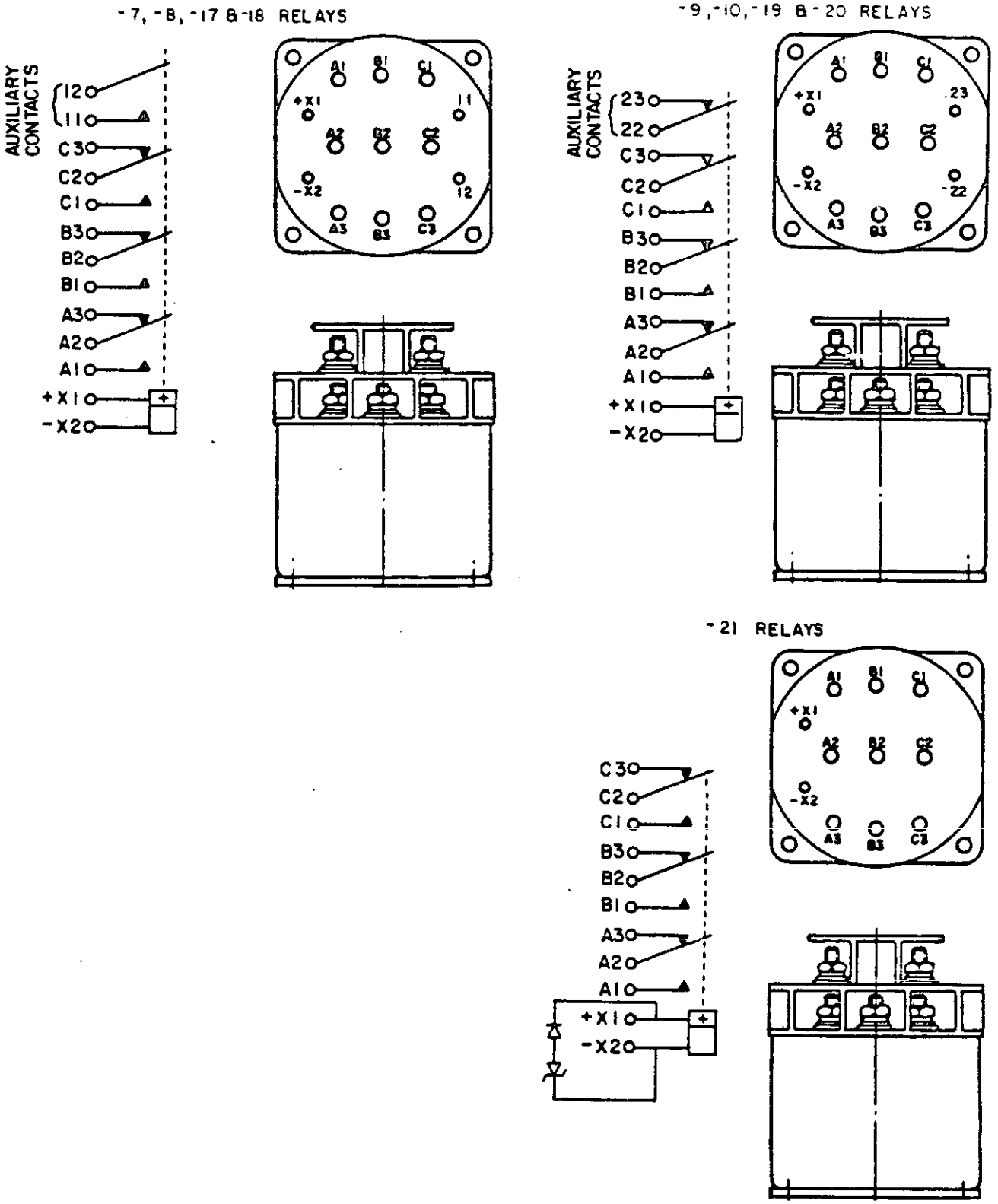

FIGURE 302-21. Relay, EM, 3PDT or 3PST contacts, 50 amperes, permanent magnet drive (MS27751) - Continued.

Downloaded from http://www.everyspec.com

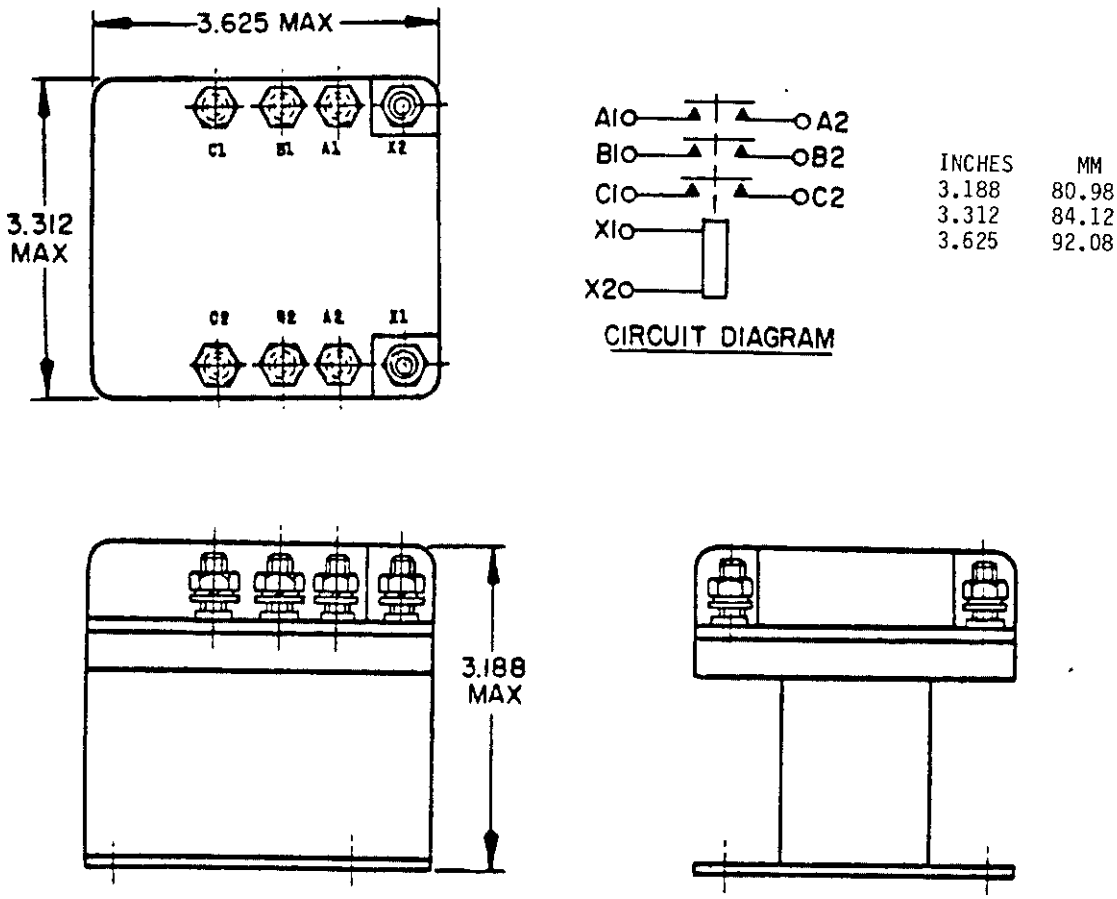

FIGURE 302-22. Relay, EM, unsealed, 3PST, normally open, 50 amperes (MS24193).

Downloaded from http://www.everyspec.com

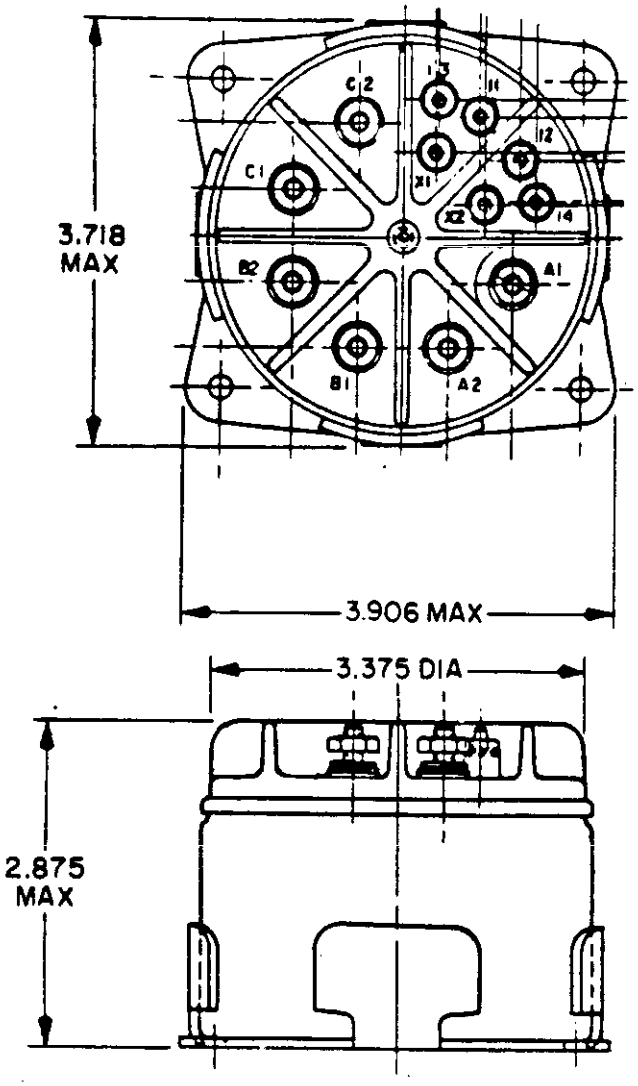

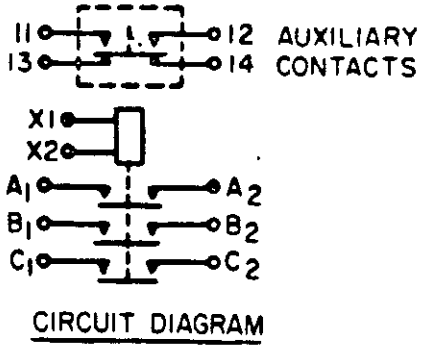

INCHES	MM
2.875	73.03
3.375	85.73
3.718	94.44
3.906	99.21

FIGURE 302-23. Relay, EM, coil and contacts individually sealed, 3PST contacts, normally open, 75 amperes (MS27714).

Downloaded from http://www.everyspec.com

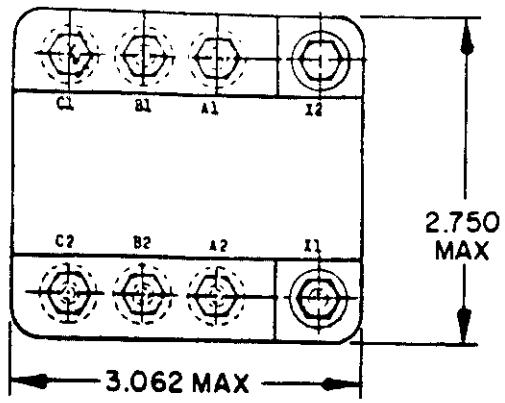

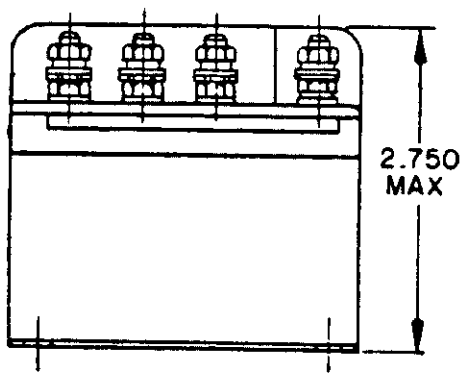

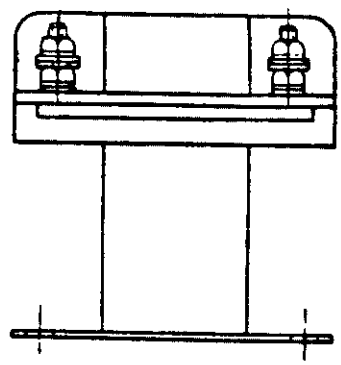

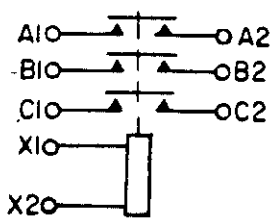

CIRCUIT DIAGRAM

INCHES	MM
2.750	69.85
3.062	77.77

FIGURE 302-24. Relay, EM, unsealed, 3PST, normally open, 25 amperes (MS24192).

Downloaded from http://www.everyspec.com

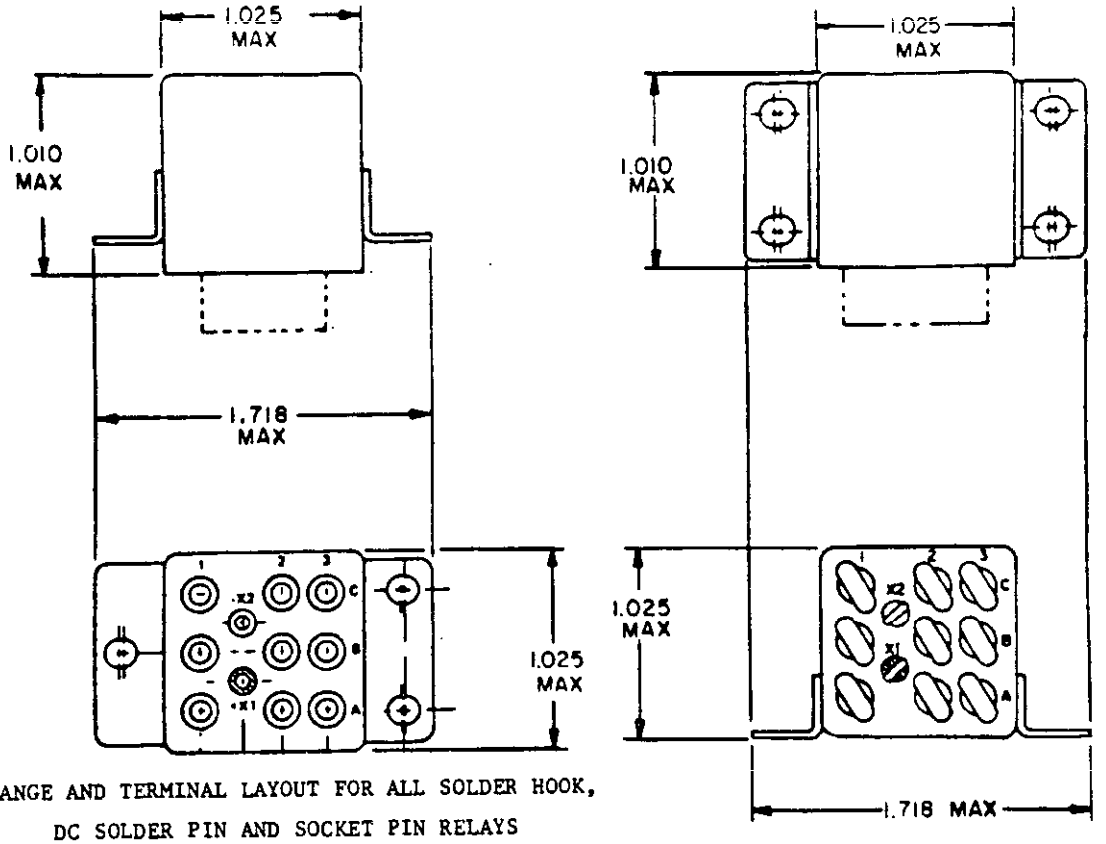

FLANGE AND TERMINAL LAYOUT FOR ALL SOLDER HOOK, DC SOLDER PIN AND SOCKET PIN RELAYS

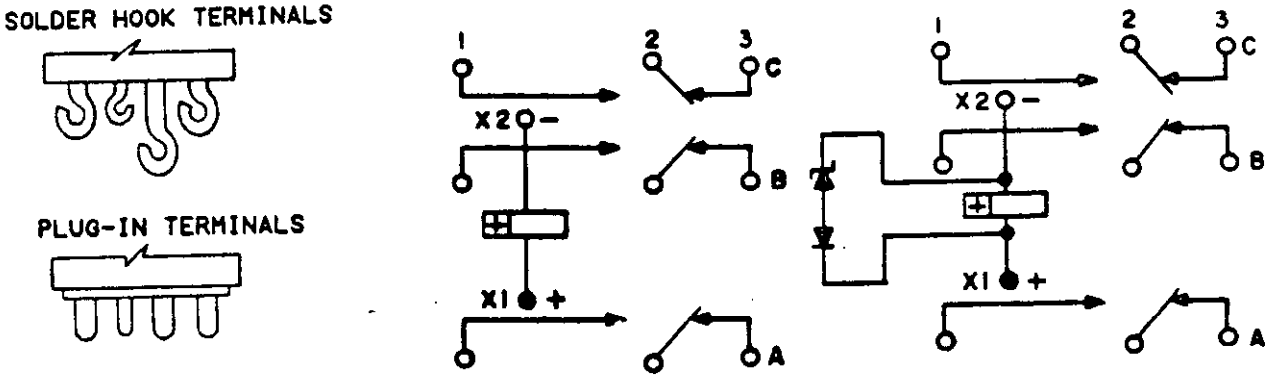

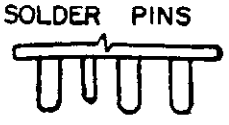

INCHES	MM
1.010	25.65
1.025	26.04
1.718	43.64

TYPE A

TYPE B

CIRCUIT DIAGRAM

FIGURE 302-25. Relay, EM, 3PDT, 25 amperes, permanent magnet drive (MS27743).

Downloaded from http://www.everyspec.com

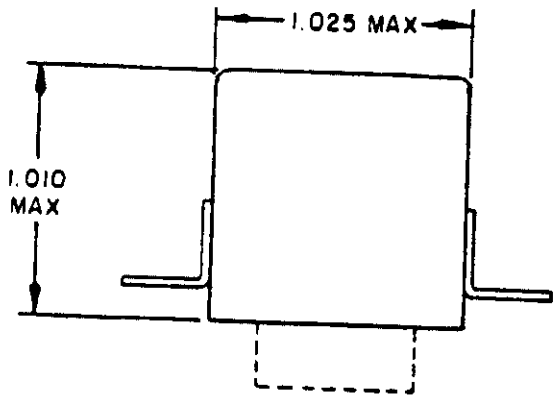

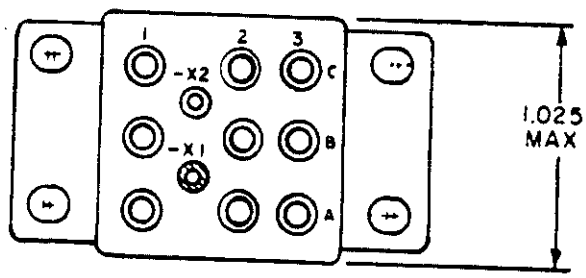

FLANGE AND TERMINAL LAYOUT FOR ALL AC SOCKET PINS (GOLD-PLATED)

FIGURE 302-25. Relay, EM, 3PDT, 25 amperes, permanent magnet drive (MS27743) - Continued.

Downloaded from http://www.everyspec.com

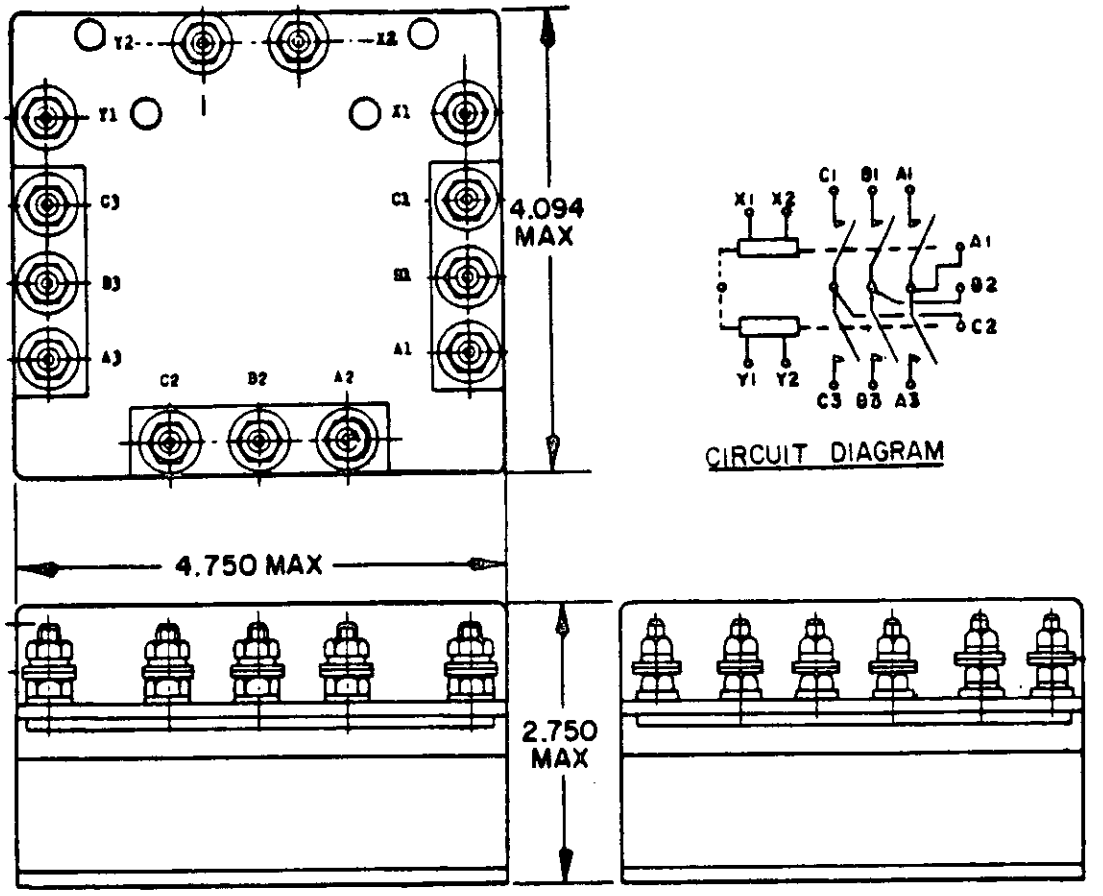

INCHES	MM
2.750	69.85
4.094	103.99
4.750	120.65

FIGURE 302-26. Relay, EM, 3PDT, N.O., non-hermetically sealed, mechanically interlocked (MS24152).

Downloaded from http://www.everyspec.com

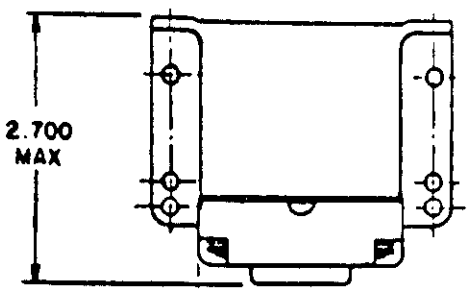

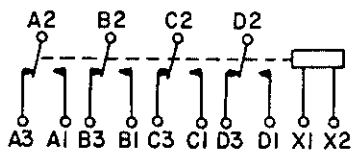

CIRCUIT DIAGRAM

THE USE OF DIODES ON AC RELAYS IS OPTIONAL

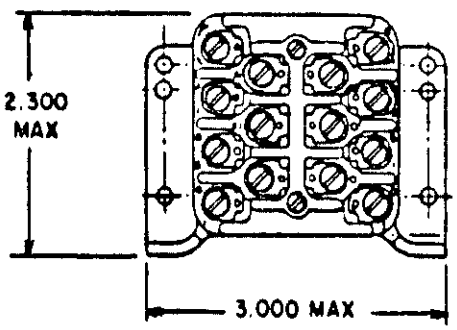

INCHES	MM
2.300	58.42
2.700	68.58
3.000	76.2

FIGURE 302-27. Relay, EM, 4PDT, 10 amperes (MS24568).

Downloaded from http://www.everyspec.com

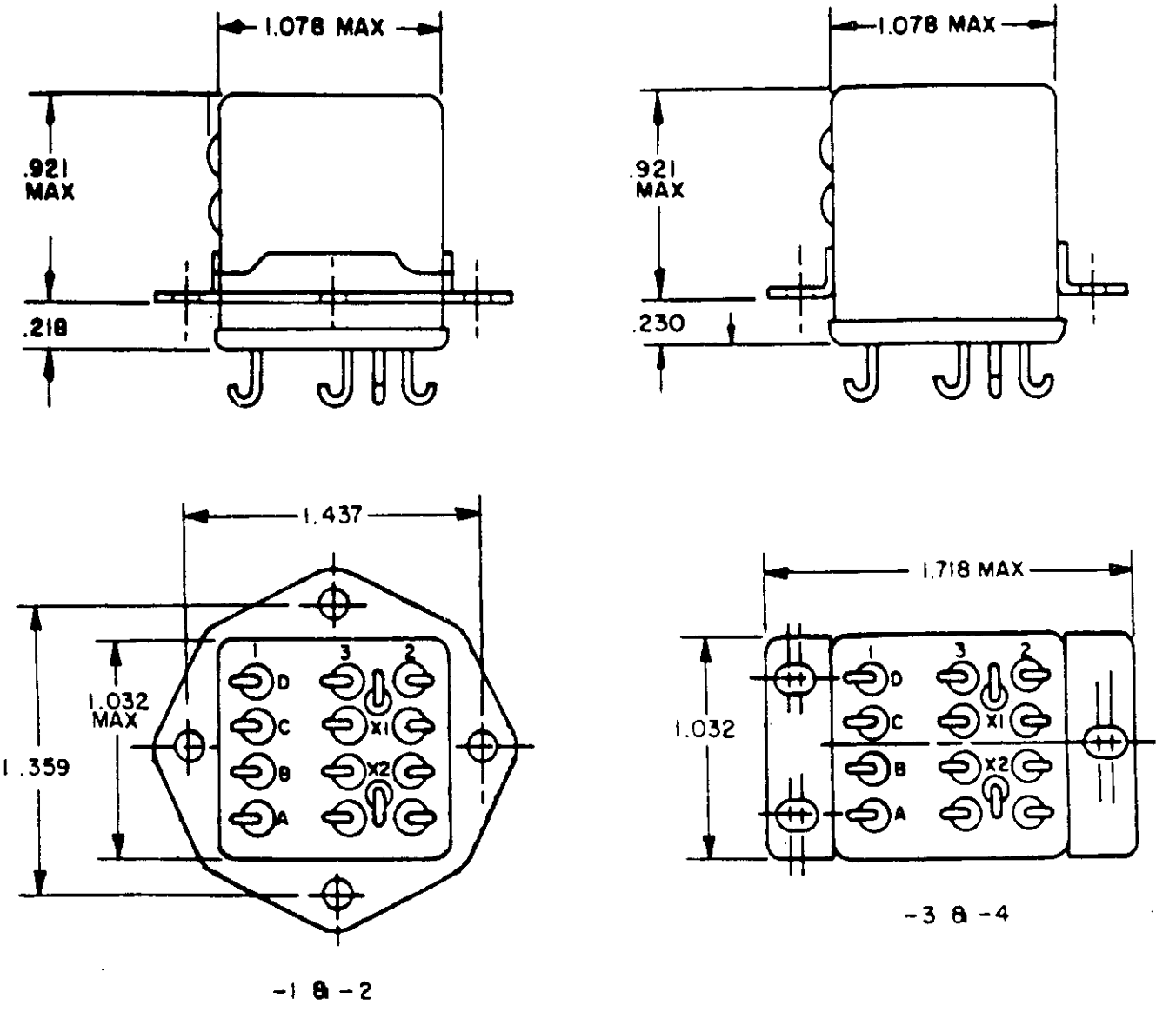

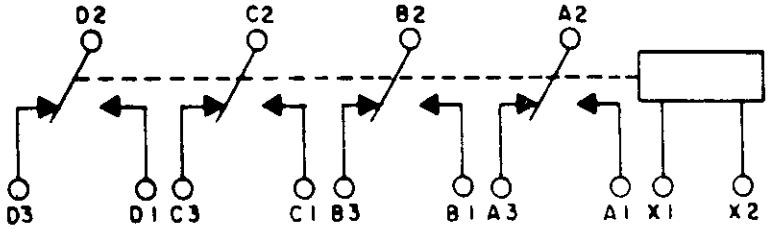

CIRCUIT DIAGRAM

INCHES	MM
.218	5.54
.230	5.84
.921	23.39
1.032	26.21
1.078	27.38
1.359	34.52
1.437	36.50
1.718	43.64

FIGURE 302-28. Relay, EM, 4PDT, 10 amperes, solder hooks (MS27255).

Downloaded from http://www.everyspec.com

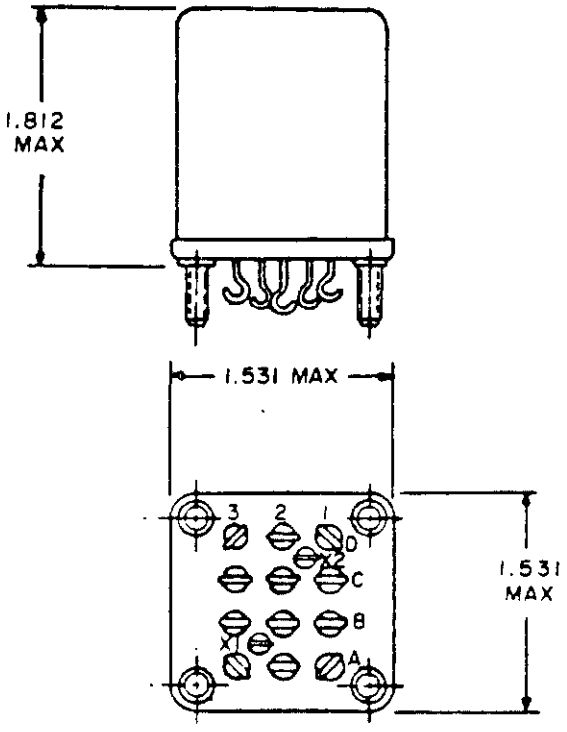

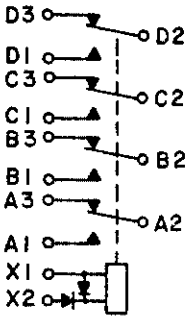

CIRCUIT DIAGRAM-A1
THE USE OF DIODES IS OPTIONAL

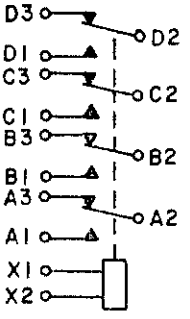

CIRCUIT DIAGRAM-D1

INCHES	MM
1.531	38.89
1.812	46.02

FIGURE 302-29. Relay, EM, 4PDT, 10 amperes (MS25271).

Downloaded from http://www.everyspec.com

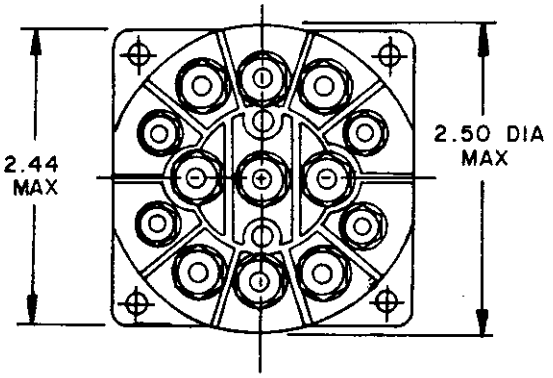

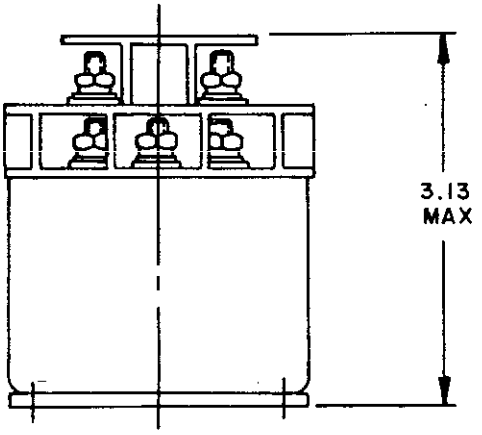

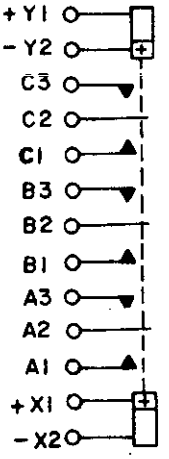

CIRCUIT DIAGRAM

INCHES	MM
2.44	61.98
2.50	63.50
3.13	79.50

FIGURE 302-30. Relay, EM, 3PDT-NO, 50 amperes (MS27750).

Downloaded from http://www.everyspec.com

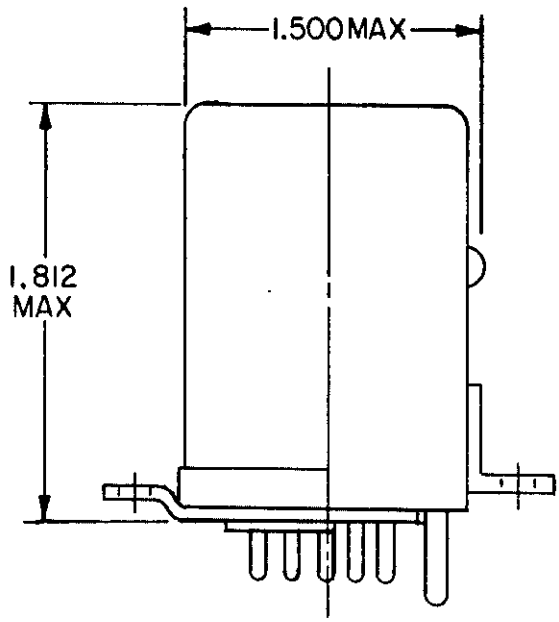

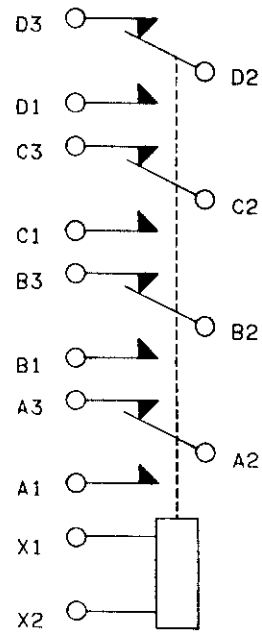

CIRCUIT DIAGRAM D-1

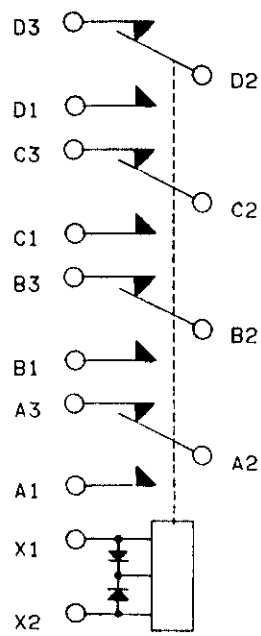

CIRCUIT DIAGRAM A-1

THE USE OF DIODES ON AC RELAYS IS OPTIONAL

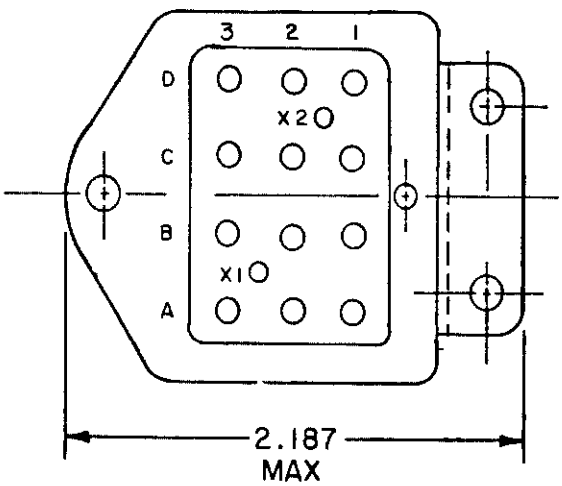

INCHES	MM
1.500	38.10
1.812	46.02
2.187	55.55

FIGURE 302-31. Relay, EM, 4PDT, 10 amperes (MS25327).

Downloaded from http://www.everyspec.com

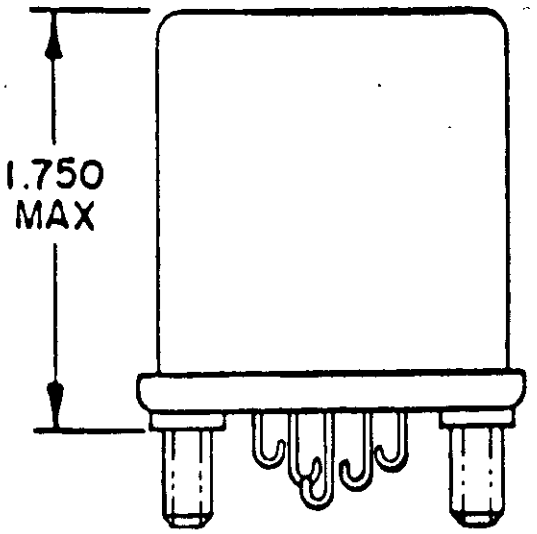

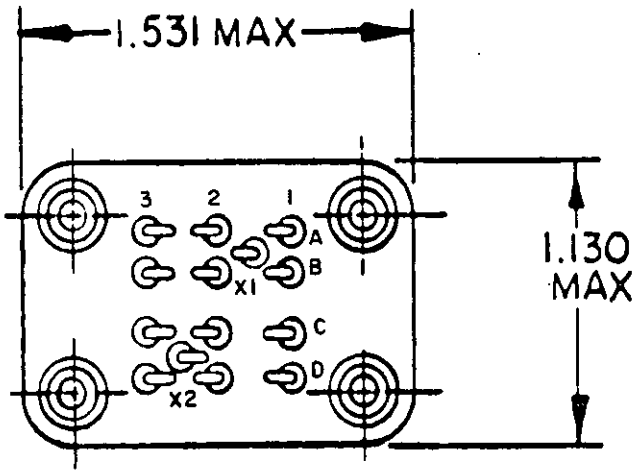

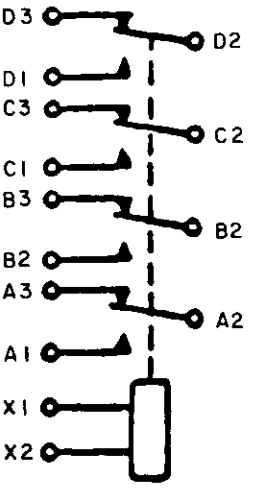

CIRCUIT DIAGRAM

INCHES	MM
1.130	28.70
1.531	38.89
1.750	44.45

FIGURE 302-32. Relay, EM, 4PDT, 5 amperes (MS25267).

Downloaded from http://www.everyspec.com

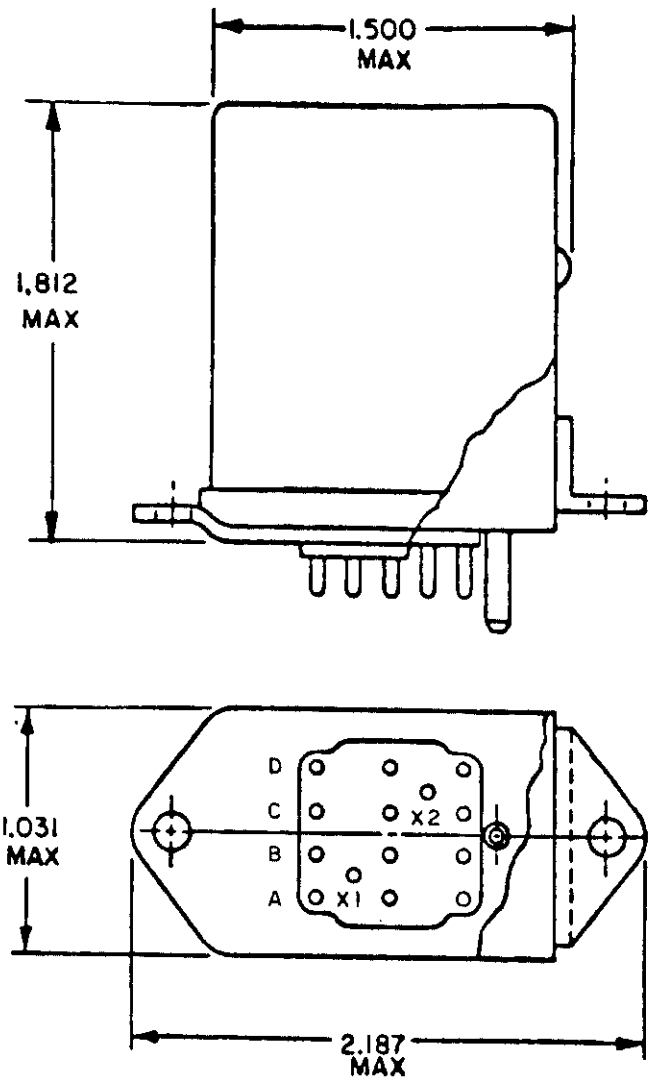

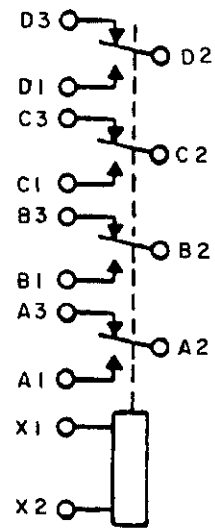

CIRCUIT DIAGRAM

INCHES	MM
1.031	26.19
1.599	38.10
1.812	46.02
2.187	55.55

FIGURE 302-33. Relay, EM, 4PDT, 5 amperes (MS25325).

Downloaded from http://www.everyspec.com

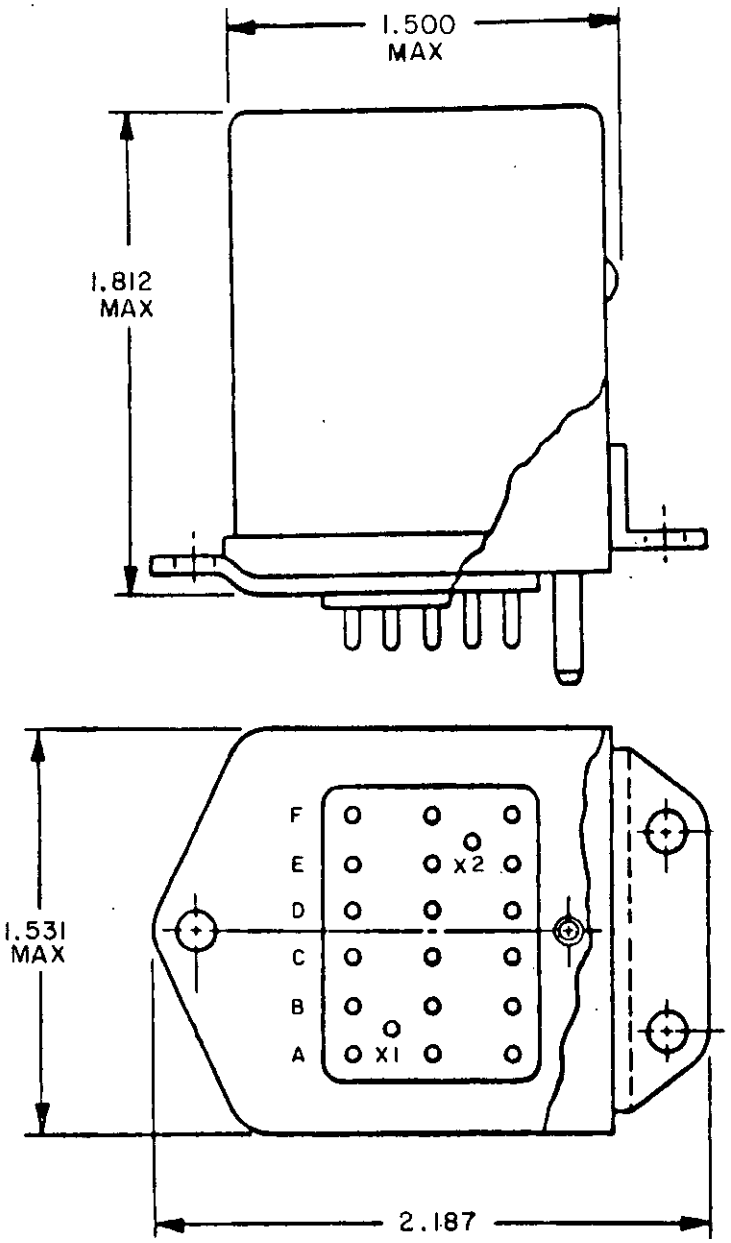

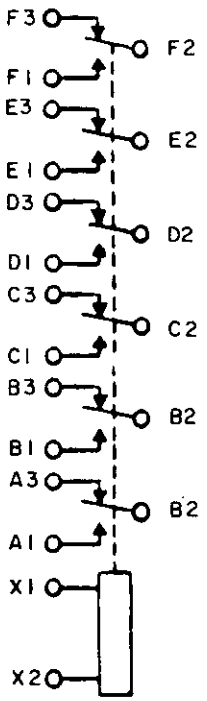

CIRCUIT DIAGRAM

INCHES	MM
1.500	38.10
1.531	38.89
1.812	46.02
2.187	55.55

FIGURE 302-34. Relay, EM, 6PDT, 5 amperes (MS25329).

Downloaded from http://www.everyspec.com

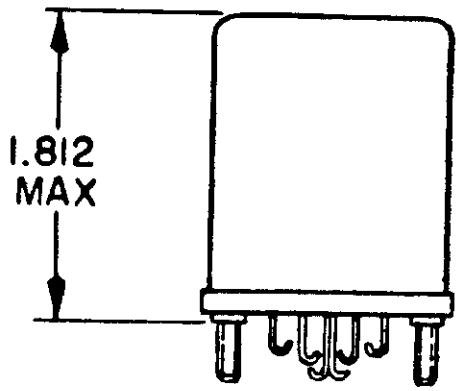

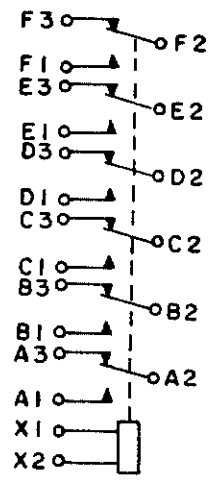

CIRCUIT DIAGRAM

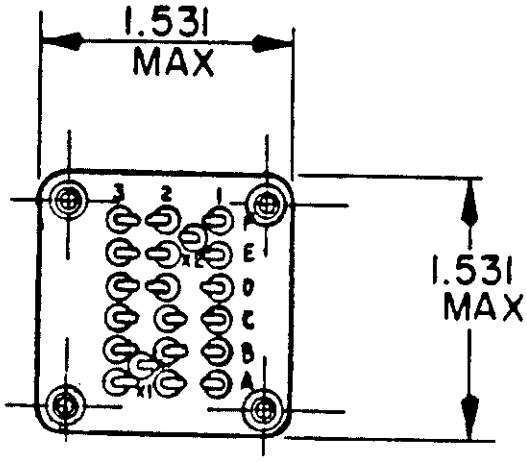

INCHES	MM
1.531	38.89
1.812	46.02

FIGURE 302-35. Relay, EM, 6PDT, 5 amperes (MS25269).

Downloaded from http://www.everyspec.com

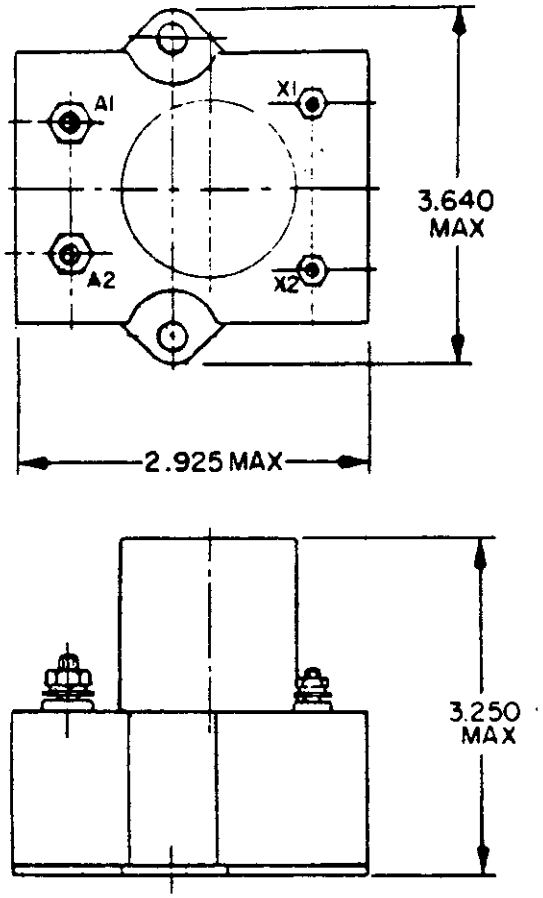

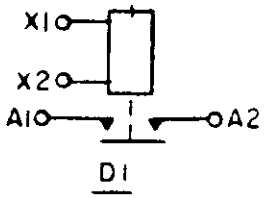

CIRCUIT DIAGRAM

INCHES	MM
2.925	74.30
3.250	82.55
3.640	92.46

FIGURE 302-36. Relay, EM, SPST, N.O., 200 amperes (MS24183).

Downloaded from http://www.everyspec.com

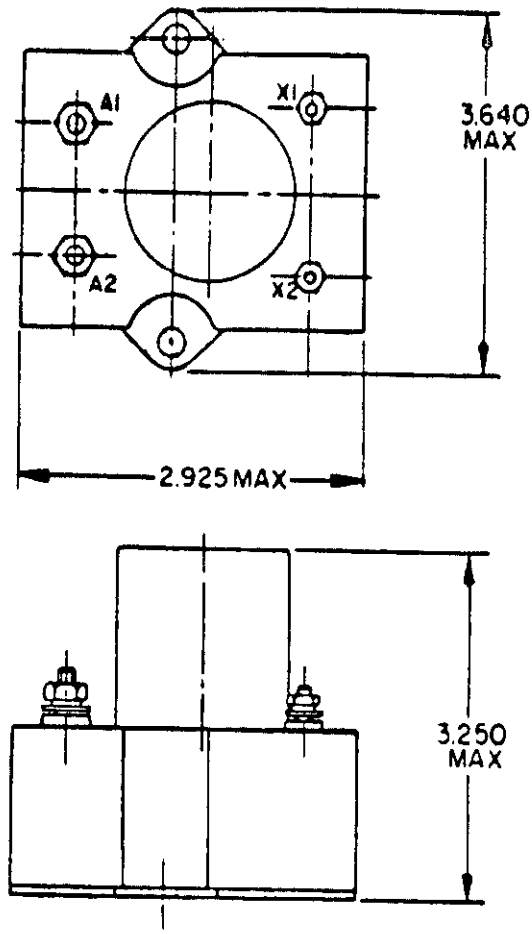

D1

INCHES	MM
2.925	74.30
3.250	82.55
3.640	92.46

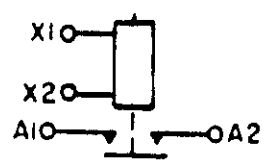

D1

FIGURE 302-37. Relay, EM, SPST, N.O., 100 amperes (MS24182).

Downloaded from http://www.everyspec.com

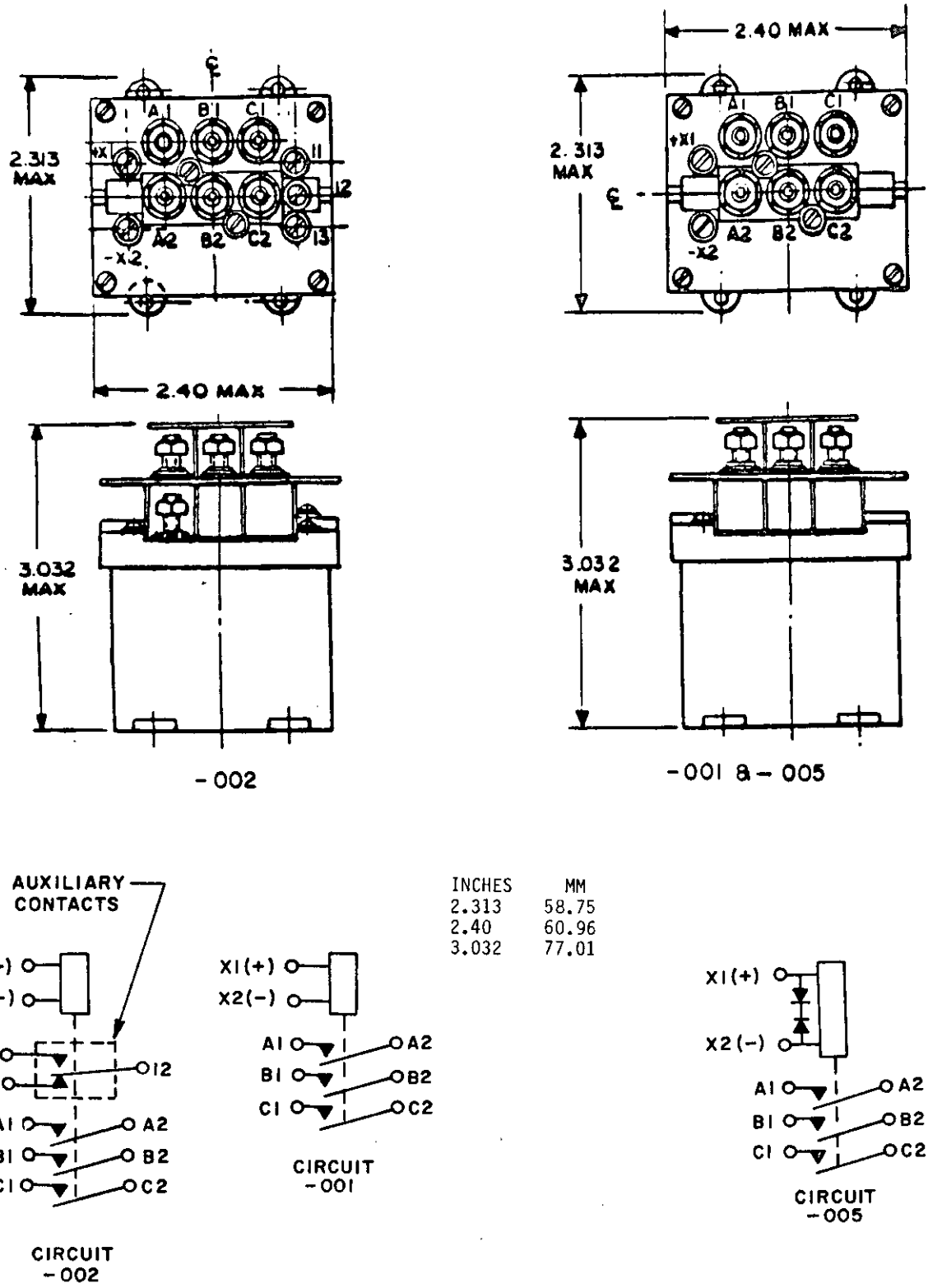

INCHES	MM
2.313	58.75
2.40	60.96
3.032	77.01

FIGURE 302-38. Relay, EM, 3PST, N.O., 60 amperes, environmentally sealed (MIL-R-6106/10).

Downloaded from http://www.everyspec.com

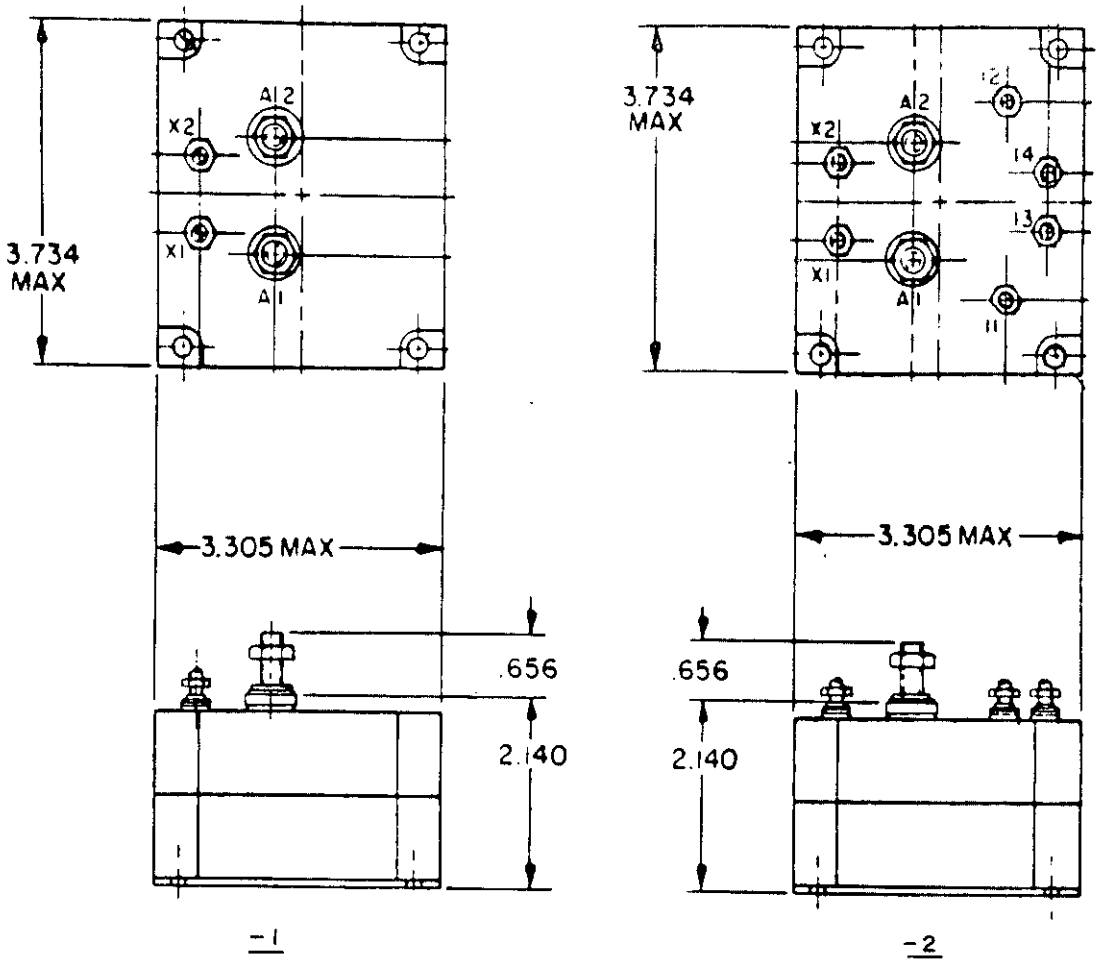

INCHES	MM
.656	16.66
2.140	54.36
3.305	83.95
3.734	94.84

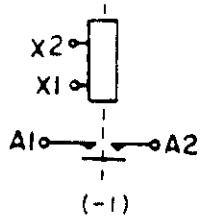

CIRCUIT DIAGRAM

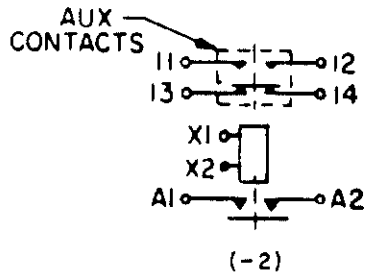

CIRCUIT DIAGRAM

FIGURE 302-39. Relay, EM, SPST, N.O., 100 amperes (MS27242).

Downloaded from http://www.everyspec.com

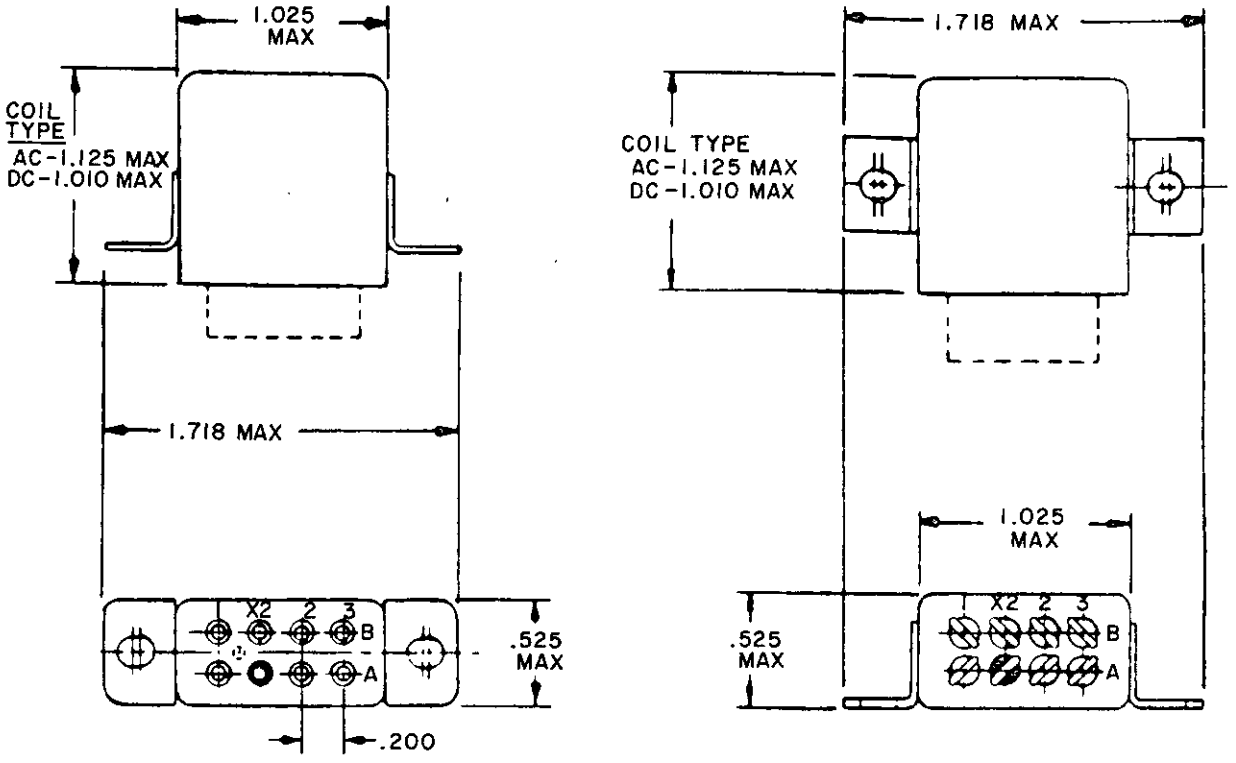

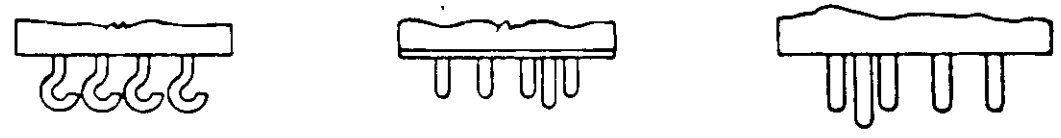

SOLDER HOOK TERMINAL PLUG-IN TERMINAL SOLDER PIN TERMINAL

INCHES	MM
.200	5.08
.525	13.34
1.010	25.65
1.025	26.04
1.125	28.58
1.718	43.64

FIGURE 302-40. Relay, EM, DPDT, 10 amperes, permanent magnet drive (MS27401).

Downloaded from http://www.everyspec.com

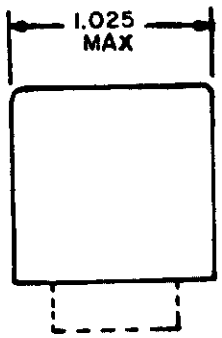

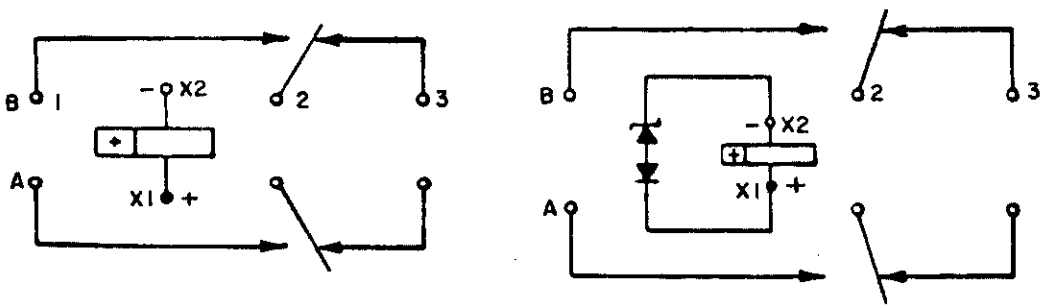

CIRCUITS

FIGURE 302-40. Relay, EM, DPDT, 10 amperes, permanent magnet drive (MS27401) - Continued.

Downloaded from http://www.everyspec.com

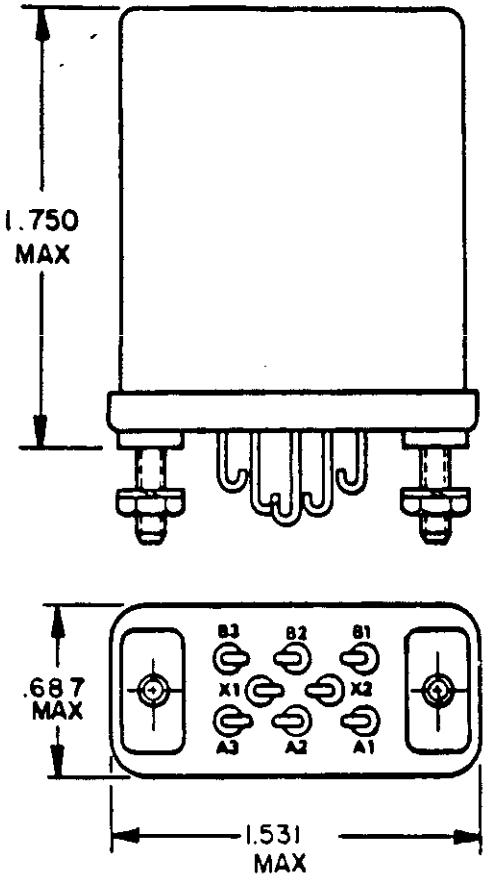

INCHES	MM
.687	17.45
1.531	38.89
1.750	44.45

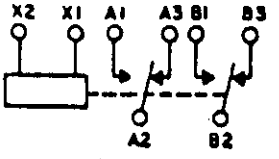

CIRCUIT DIAGRAM

FIGURE 302-41. Relay, EM, DPDT, 5 amperes (MS25395).

Downloaded from http://www.everyspec.com

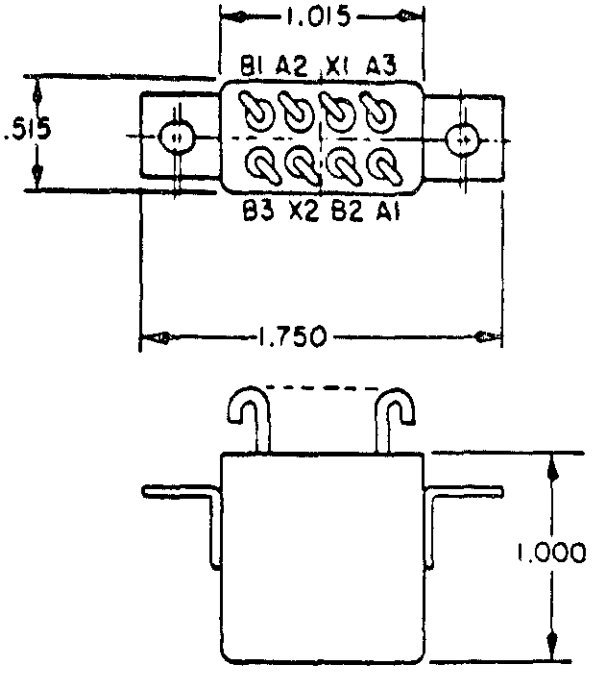

DASH 1 AND DASH 3

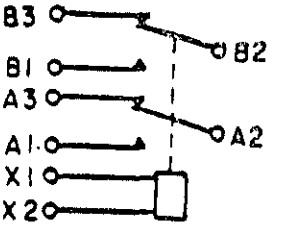

CIRCUIT DIAGRAM

INCHES	MM
.515	13.08
1.000	25.40
1.015	25.78
1.750	44.45

Dash number	Coil type	Terminal type	115/200V ac, 3PH contact rating
-1	DC	solder	N/A
-3	DC	solder	applicable

FIGURE 302-42. Relay, EM, DPDT, 10 amperes (MS27245).

Downloaded from http://www.everyspec.com

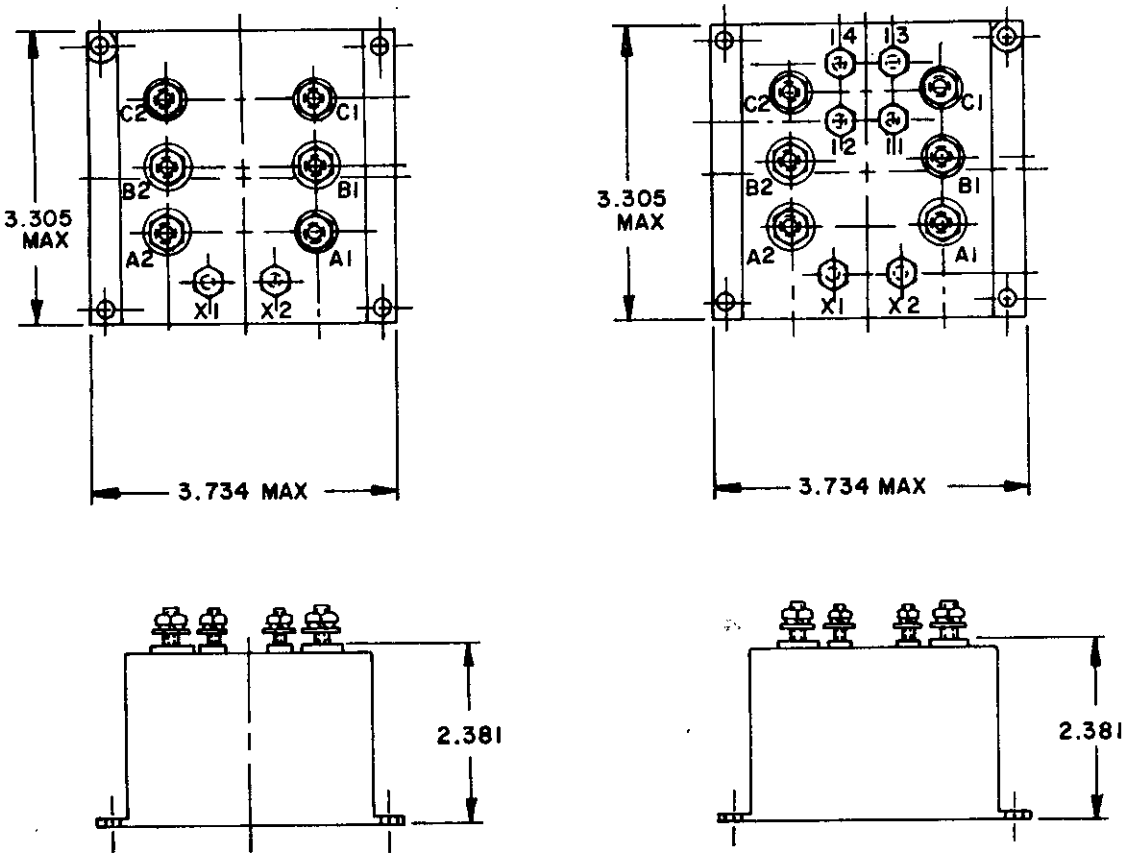

INCHES	MM
2.381	60.48
3.305	83.95
3.734	94.84

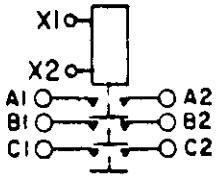

-1,-3
CIRCUIT DIAGRAM

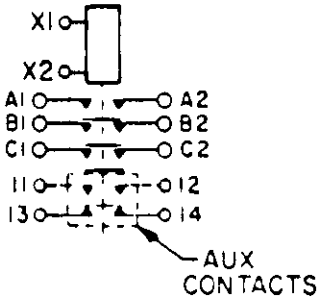

-2,-4
CIRCUIT DIAGRAM

FIGURE 302-43. Relay, EM, 3PST, N.O., 50 amperes (MS27222).

Downloaded from http://www.everyspec.com

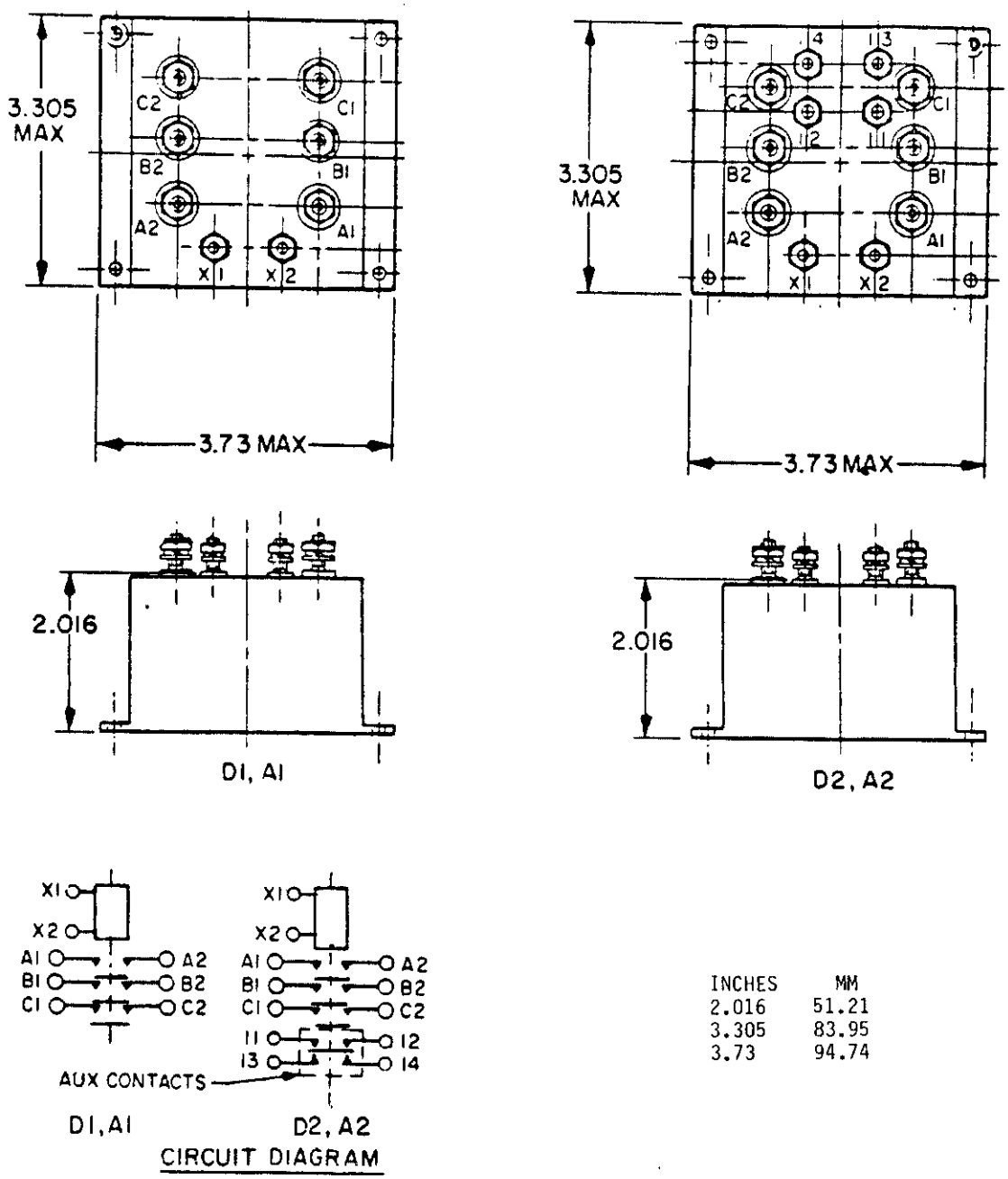

INCHES	MM
2.016	51.21
3.305	83.95
3.73	94.74

FIGURE 302-44. Relay, EM, 3PST, N.O., 25 amperes (MS27997).

Downloaded from http://www.everyspec.com

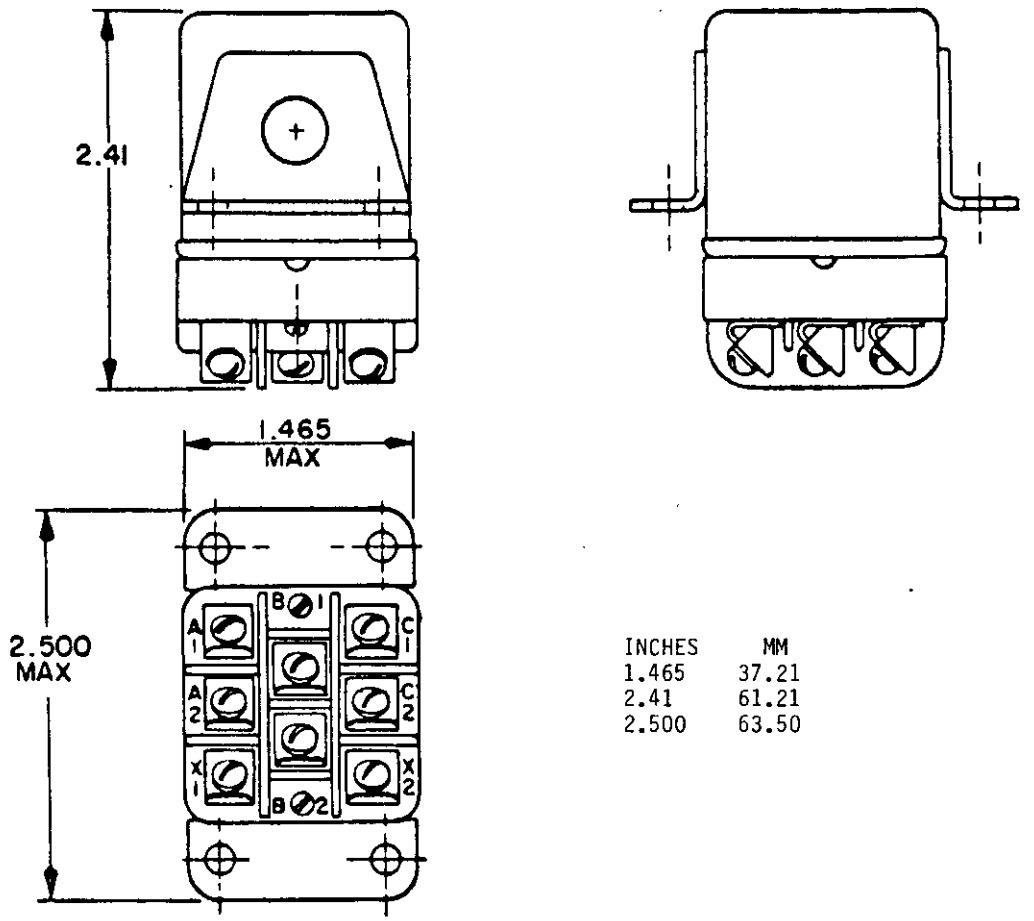

2A, 2B

INCHES	MM
1.465	37.21
2.41	61.21
2.500	63.50

FIGURE 302-45. Relay, EM, 3PST, N.O., 25 amperes, hook and screw terminals (MS27418).

Downloaded from http://www.everyspec.com

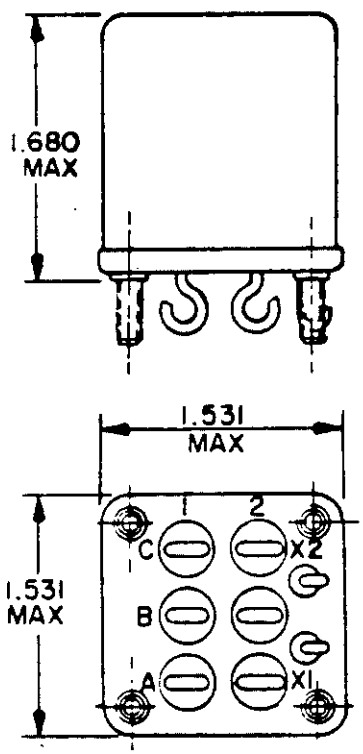

1A, 1B

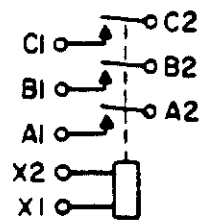

CIRCUIT DIAGRAM

INCHES	MM
1.465	37.21
1.531	38.89
1.680	42.67
2.41	61.21
2.500	63.50

FIGURE 302-45. Relays, EM, hook and screw terminals, 3PST, normally open, 25 amperes - Continued.

Downloaded from http://www.everyspec.com

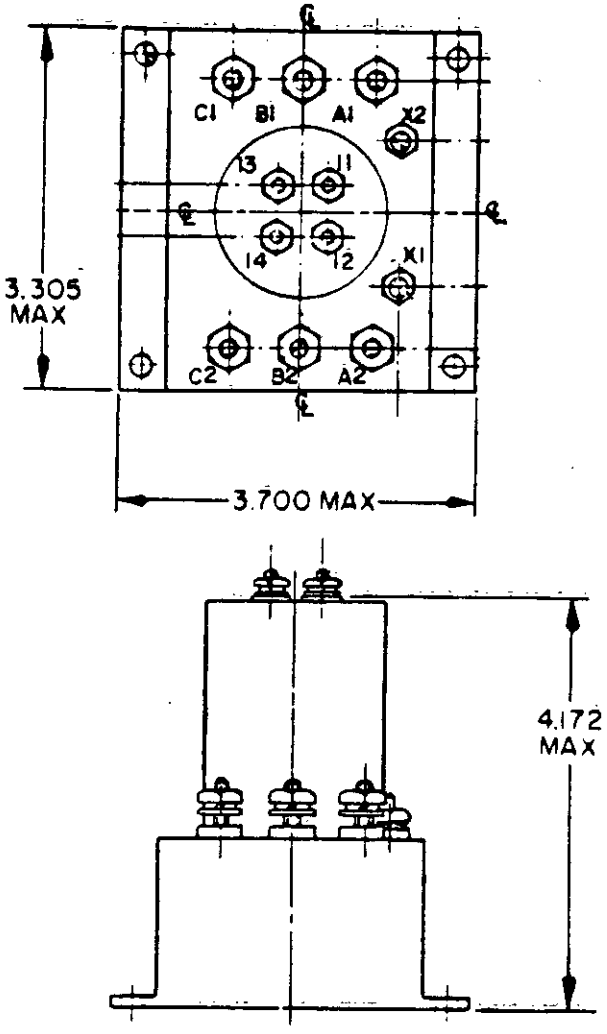

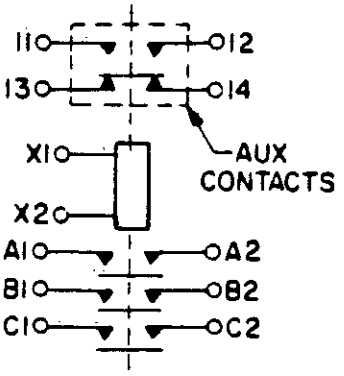

CIRCUIT DIAGRAM

INCHES	MM
3.305	83.95
3.700	93.98
4.172	105.97

FIGURE 302-46. Relay, EM, 3PST, N.O., 12 amperes (MS21330).

Downloaded from http://www.everyspec.com

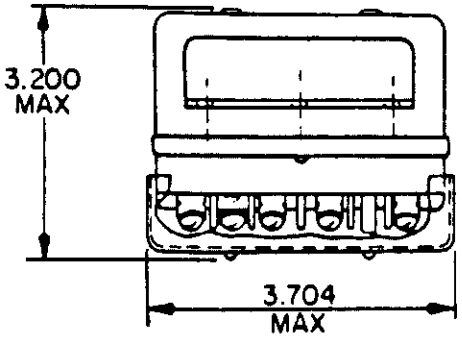

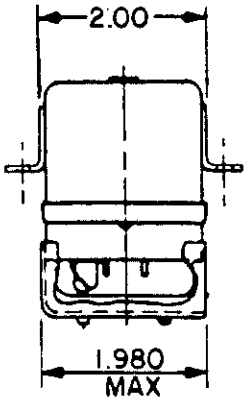

INCHES	MM
1.980	50.29
2.00	50.80
3.000	76.20
3.200	81.28
3.671	93.24
3.704	94.08

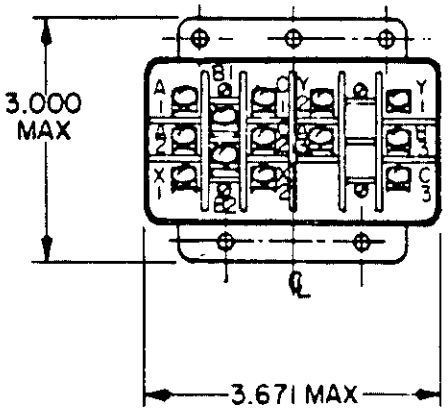

COVER OMITTED FROM THIS VIEW FOR CLARITY

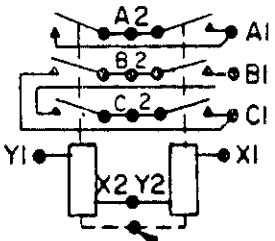

-1
CIRCUIT DIAGRAM

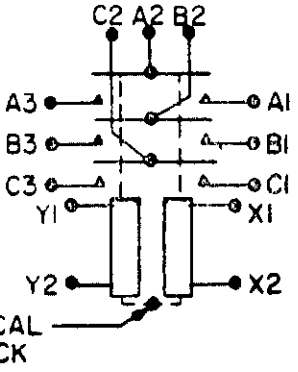

-2
CIRCUIT DIAGRAM

FIGURE 302-47. Relay, EM, 3PST, 20 amperes (mechanically interlocked) center off (MS27706).

Downloaded from http://www.everyspec.com

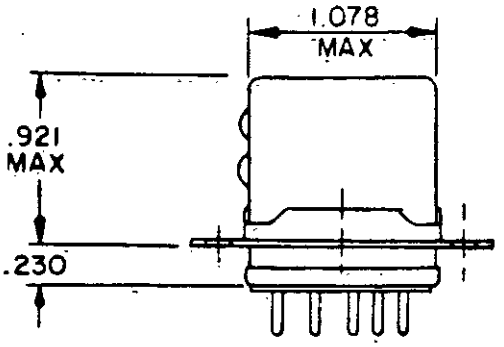

INCHES	MM
.230	5.84
.921	23.39
1.032	26.21
1.078	27.38
1.359	34.52
1.437	36.50

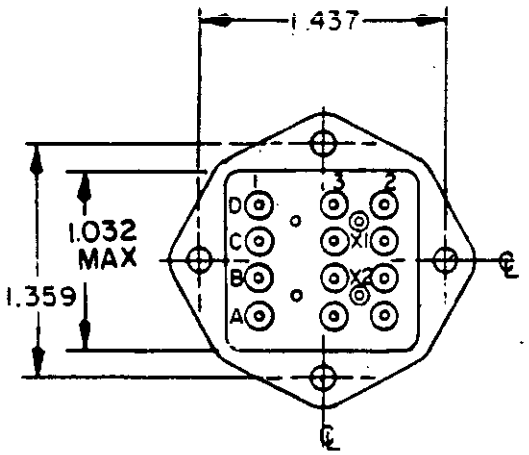

-1 & 2

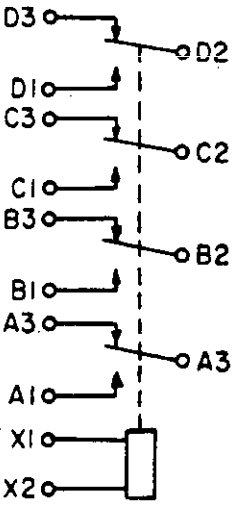

CIRCUIT DIAGRAM

THE USE OF DIODES ON AC RELAYS IS OPTIONAL

FIGURE 302-48. Relay, EM, 4PDT, 10 amperes (MS27254).

Downloaded from http://www.everyspec.com

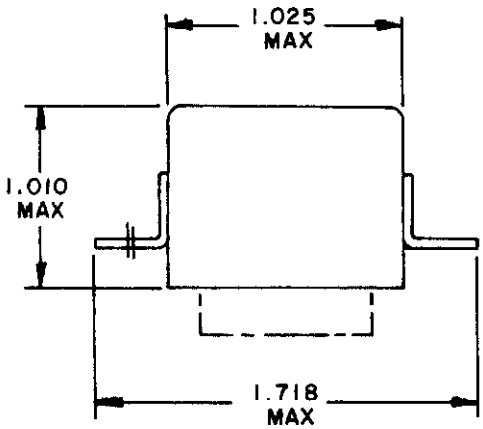

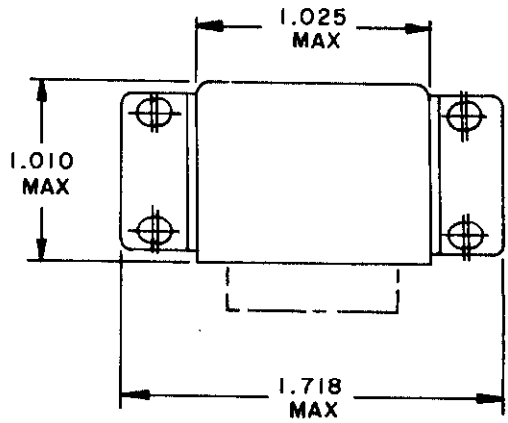

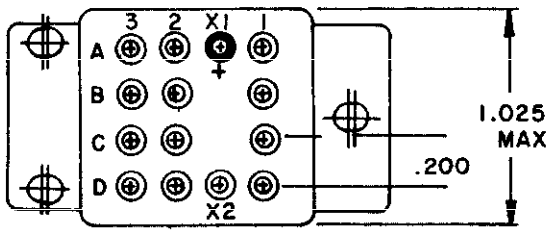

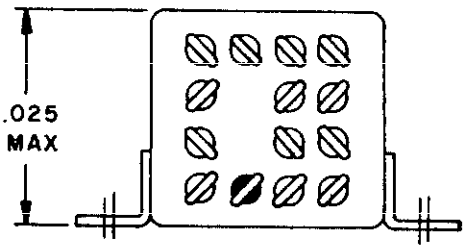

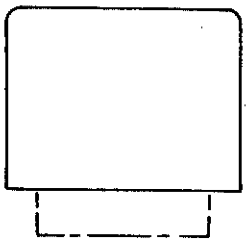

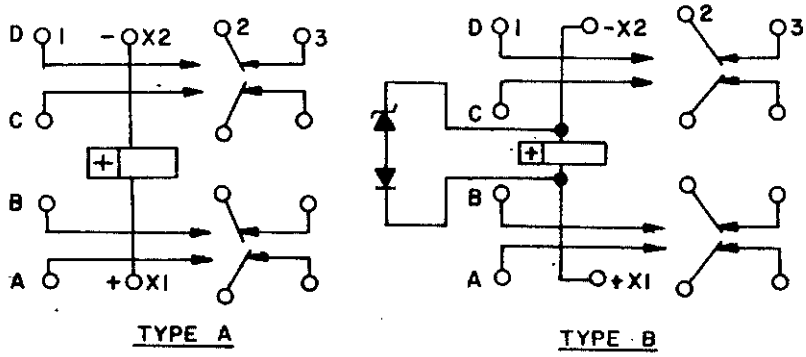

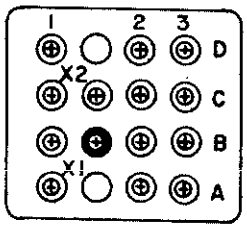

TERMINAL LAYOUT FOR ALL AC PIN RELAYS

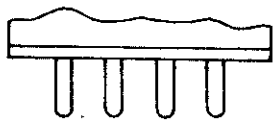

PLUG-IN TERMINAL

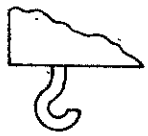

SOLDER-HOOK TERMINAL

INCHES	MM
.200	5.08
1.010	25.65
1.025	26.04
1.718	43.64

SOLDER-PIN TERMINAL

FIGURE 302-49. Relay, EM, 4PDT, 10 amperes, permanent magnet drive (MS27400).

Downloaded from http://www.everyspec.com

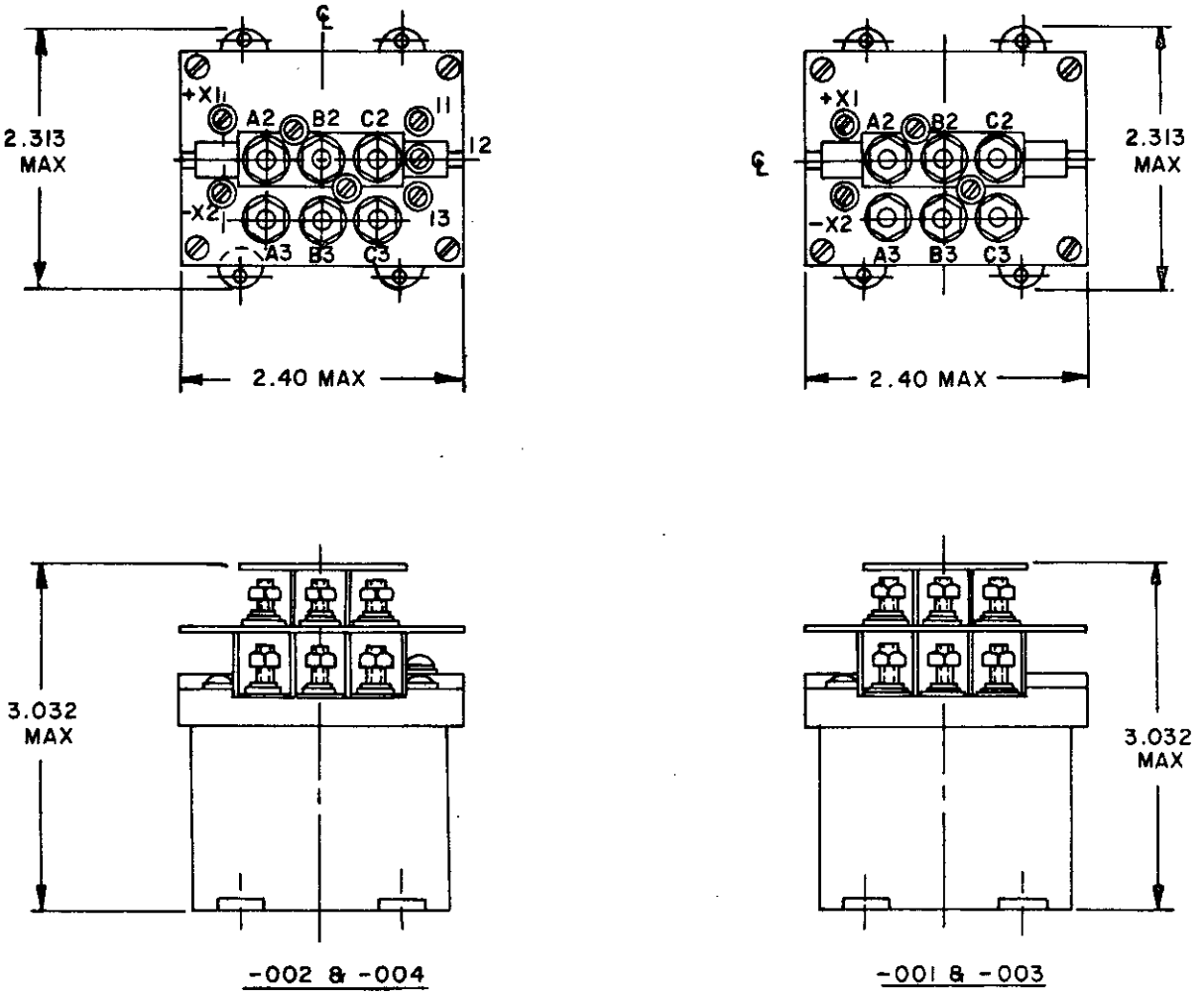

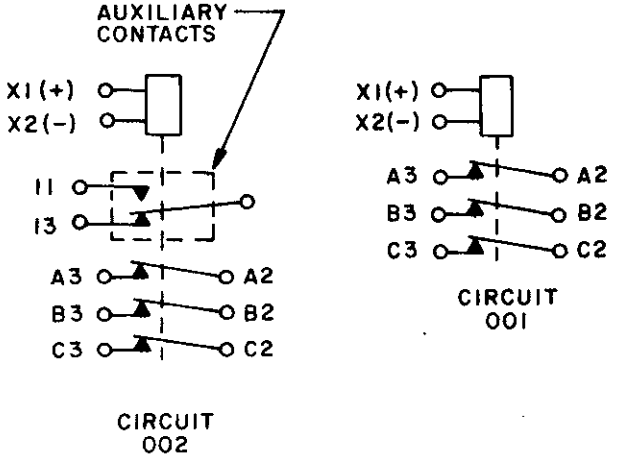

INCHES	MM
2.313	58.75
2.40	60.96
3.032	77.01

FIGURE 302-50. Relay, EM, 3PST, N.C., 60 amperes, environmentally sealed (MIL-R-6106/11).

Downloaded from http://www.everyspec.com

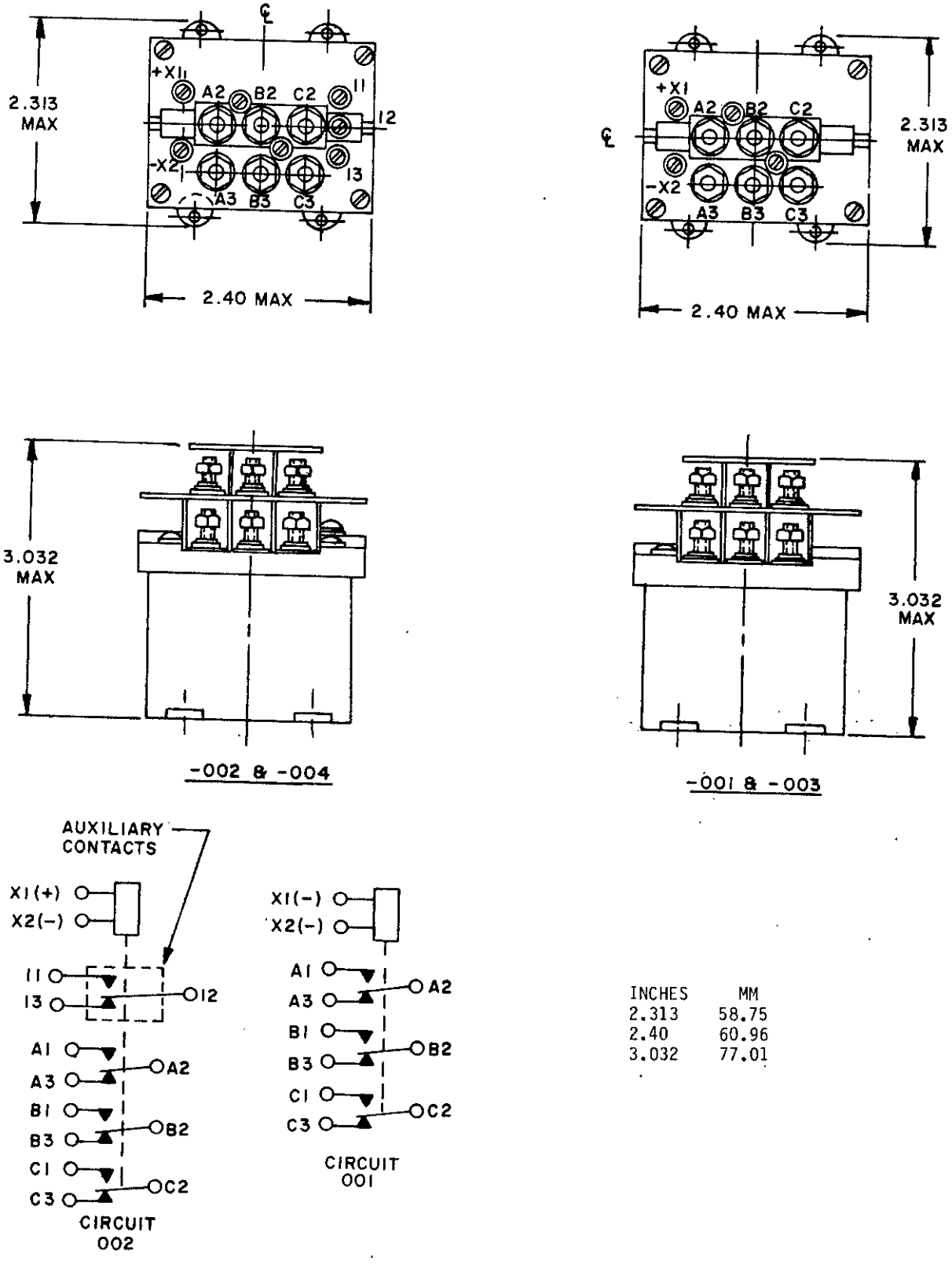

INCHES	MM
2.313	58.75
2.40	60.96
3.032	77.01

FIGURE 302-51. Relay, EM, 3PDT, 60 amperes, environmentally sealed (MIL-R-6106/9).

Downloaded from http://www.everyspec.com

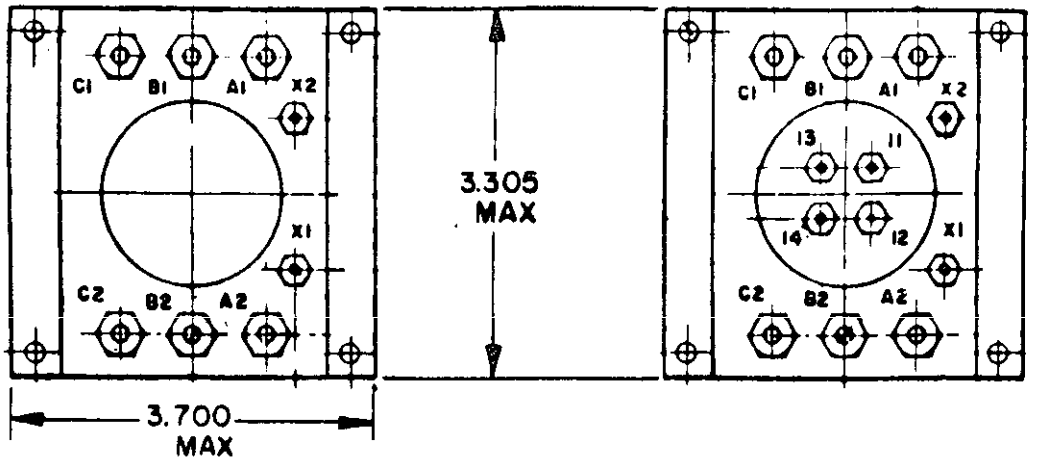

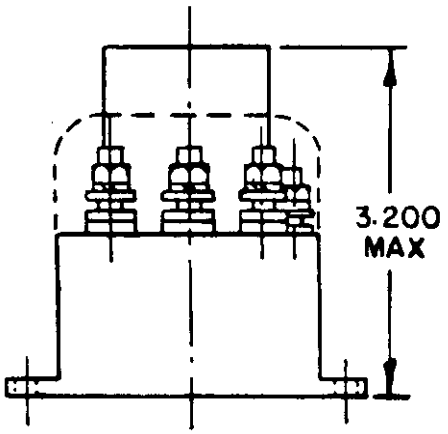

D1, A3

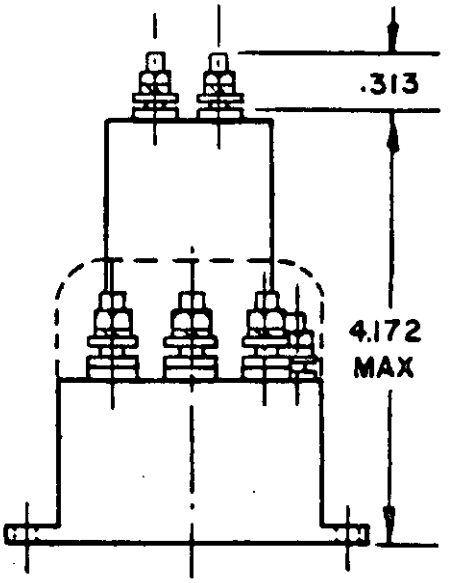

D2, A4

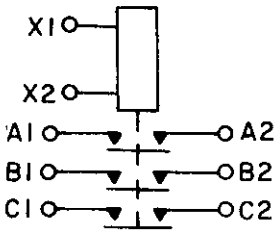

CIRCUIT DIAGRAM

INCHES	MM
.313	7.95
3.200	81.28
3.305	83.95
3.700	93.98

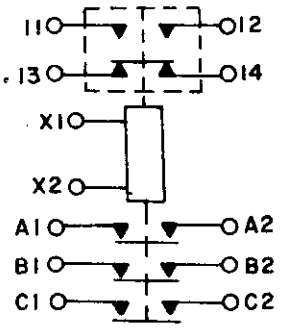

CIRCUIT DIAGRAM

FIGURE 302-52. Relay, EM, 3PST, N.O., 25 amperes (MS24143).

Downloaded from http://www.everyspec.com

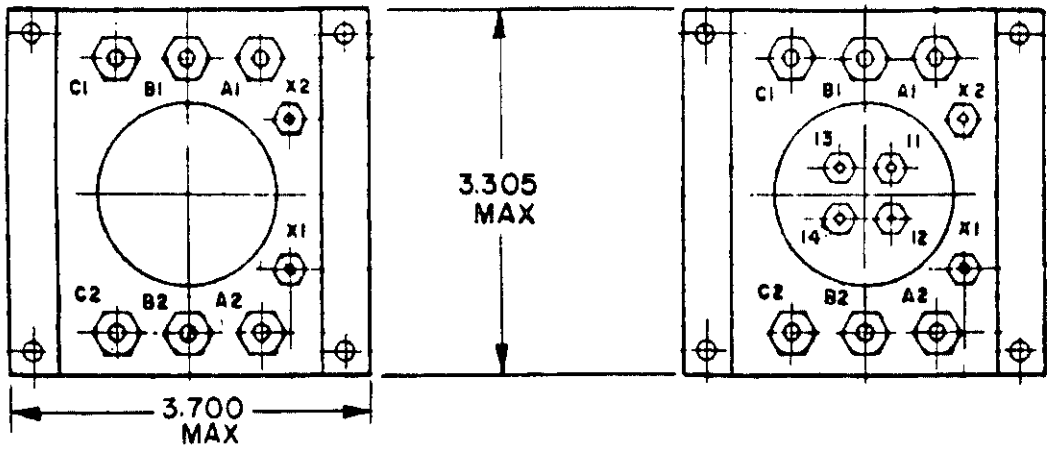

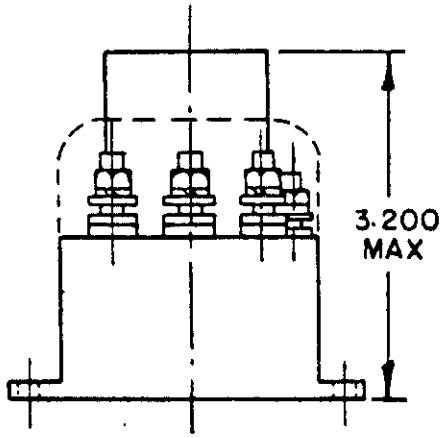

D1, A3

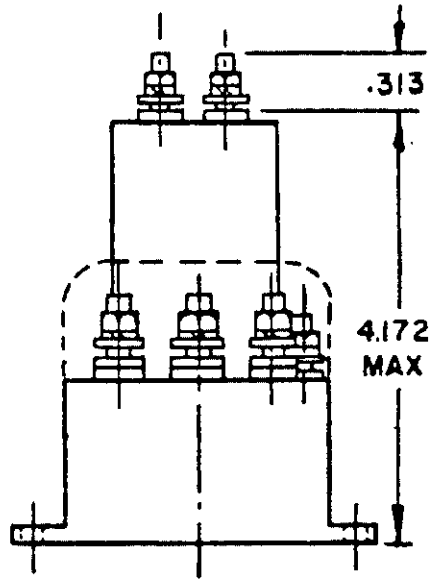

D2, A4

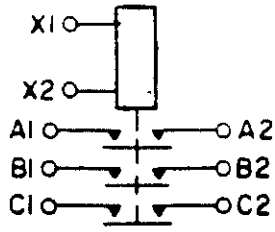

CIRCUIT DIAGRAM

INCHES	MM
.313	7.95
3.200	81.28
3.305	83.95
3.700	93.98

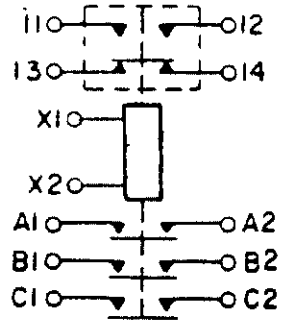

CIRCUIT DIAGRAM

FIGURE 302-53. Relay, EM, 3PST, N.O., 50 amperes (MS24376).

Downloaded from http://www.everyspec.com

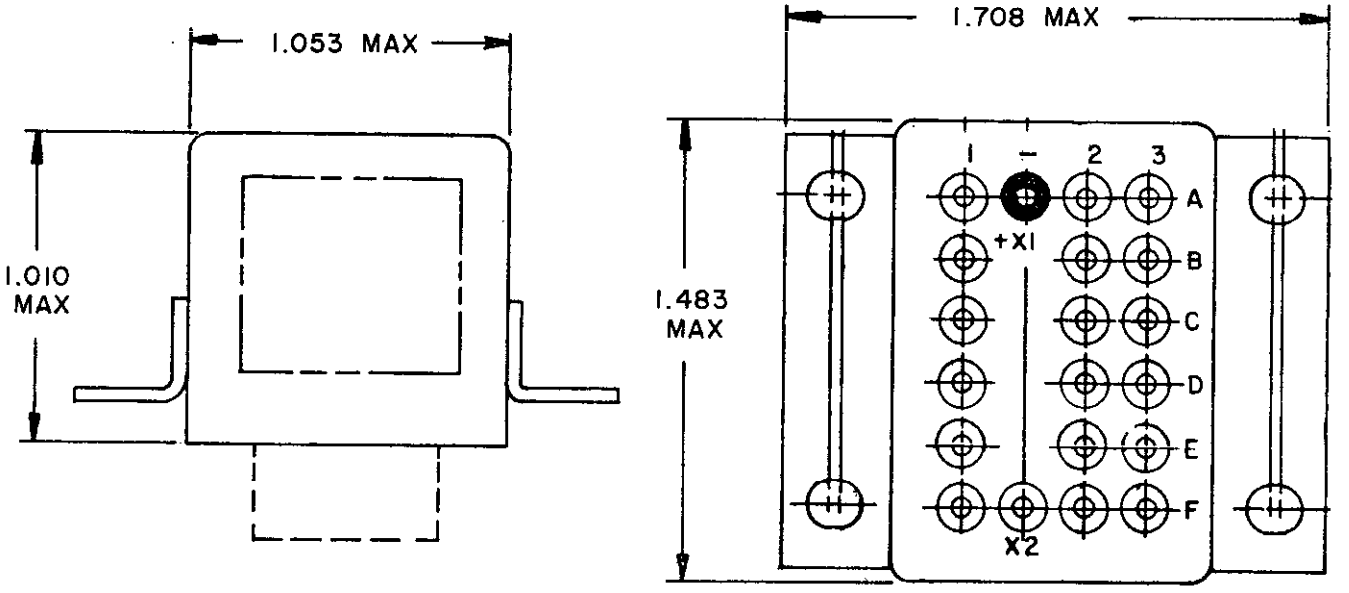

TERMINAL LAYOUT -003, -005, -006, -013, AND 014

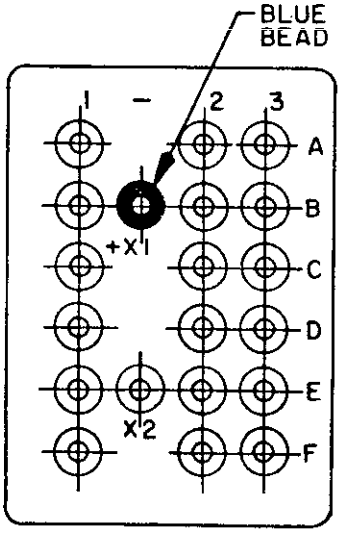

TERMINAL LAYOUT -004

INCHES	MM
1.010	25.65
1.053	26.75
1.483	37.67
1.708	43.38

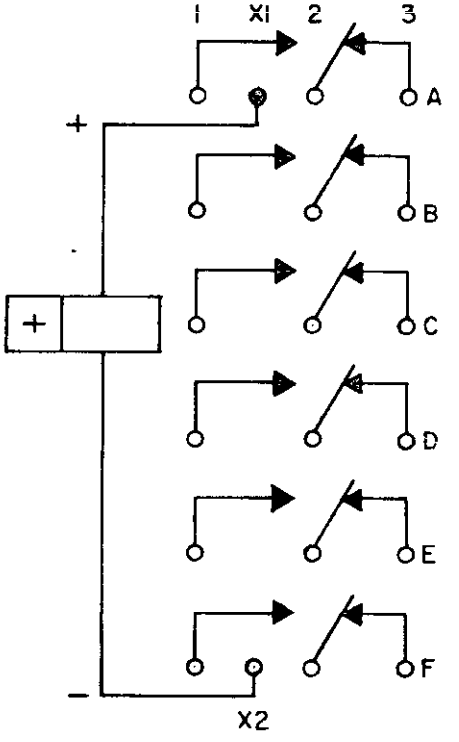

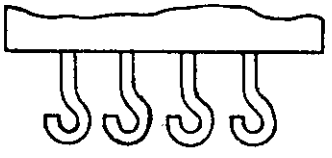

SOLDER-HOOK TERMINAL

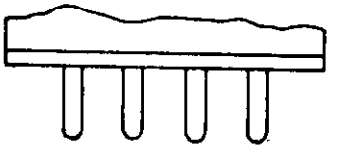

PLUG-IN TERMINAL

CIRCUIT

FIGURE 302-54. Relay, EM, 6PDT, 10 amperes, permanent magnet drive (MIL-R-6106/8).

Downloaded from http://www.everyspec.com

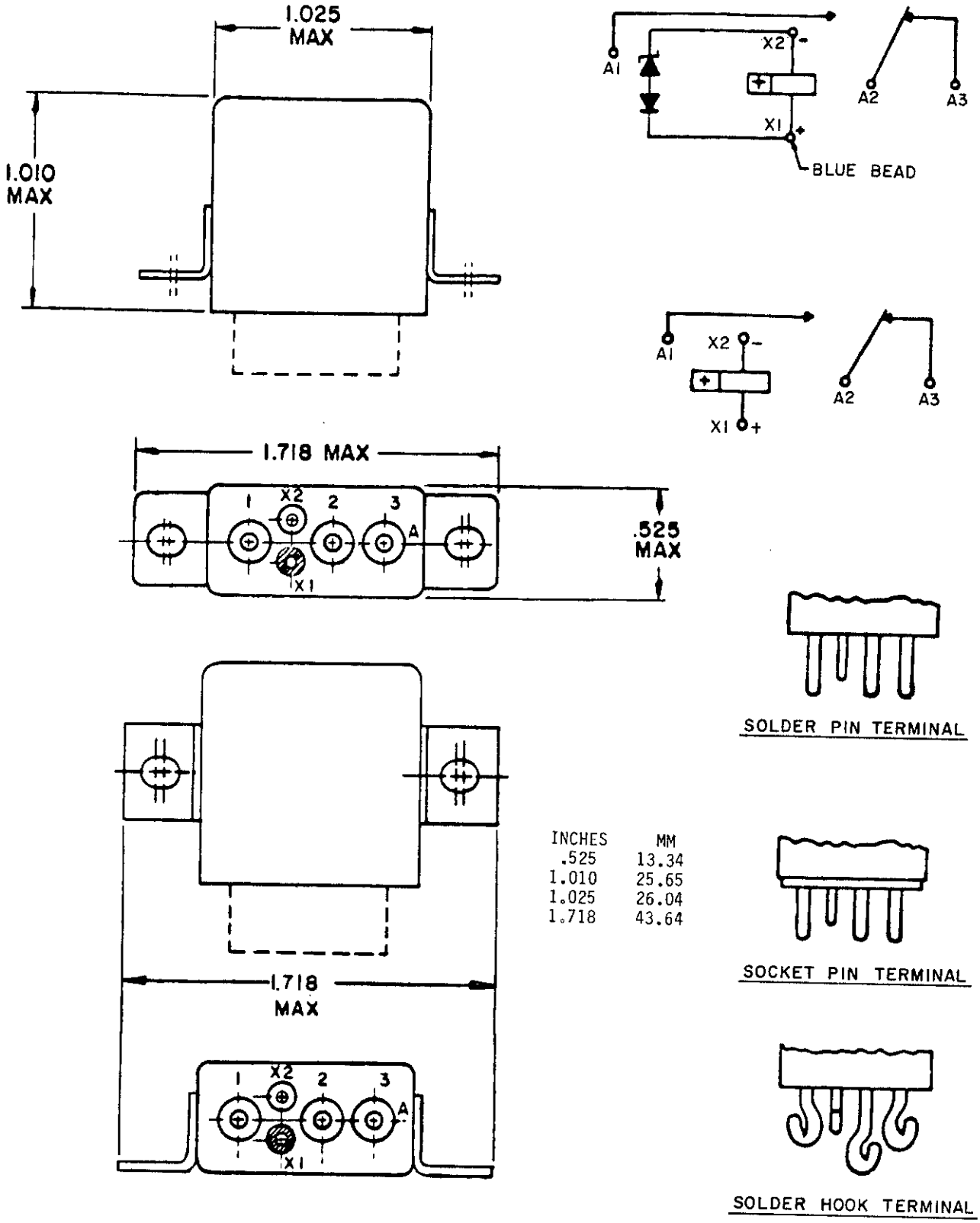

INCHES	MM
.525	13.34
1.010	25.65
1.025	26.04
1.718	43.64

FIGURE 302-55. Relay, EM, SPDT, 25 amperes (MIL-R-6106/19).

Downloaded from http://www.everyspec.com

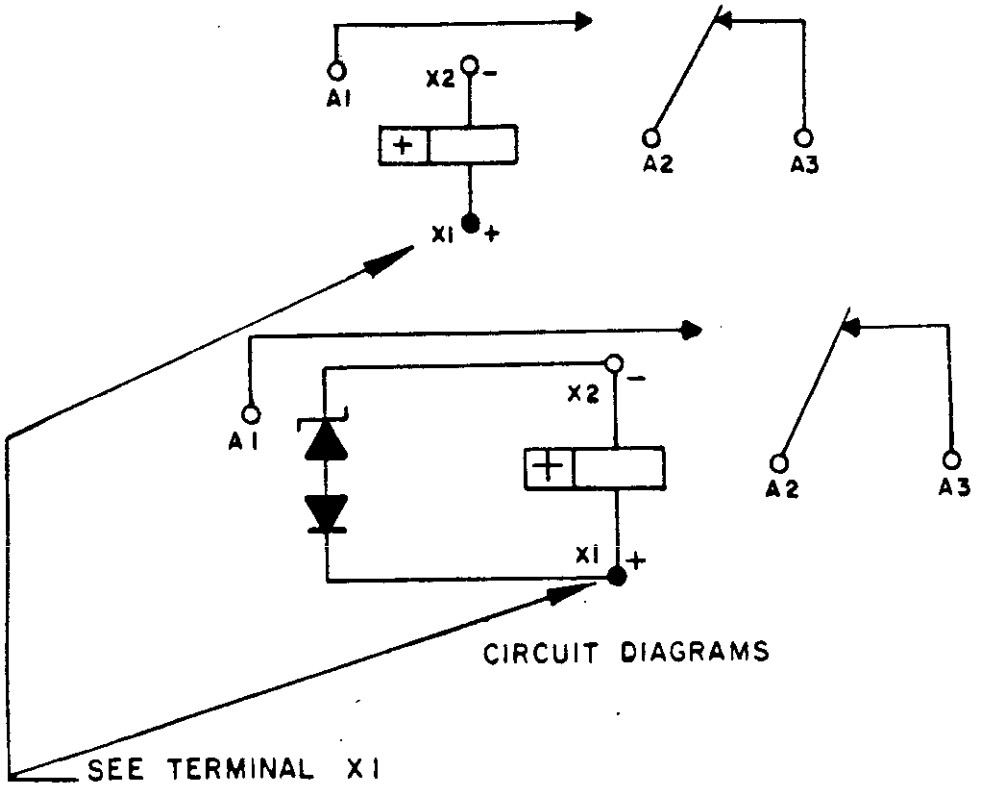

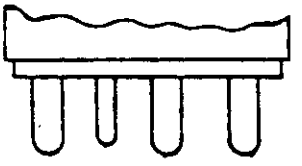

PLUG-IN AND SOLDER
PIN TERMINAL

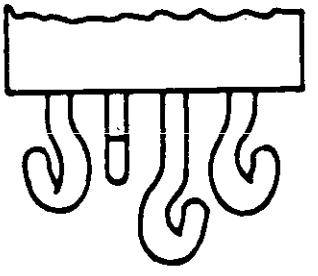

SOLDER HOOK TERMINAL

FIGURE 302-55. Relay, EM, SPDT, 25 amperes (MIL-R-6106/19) - Continued.

Downloaded from http://www.everyspec.com

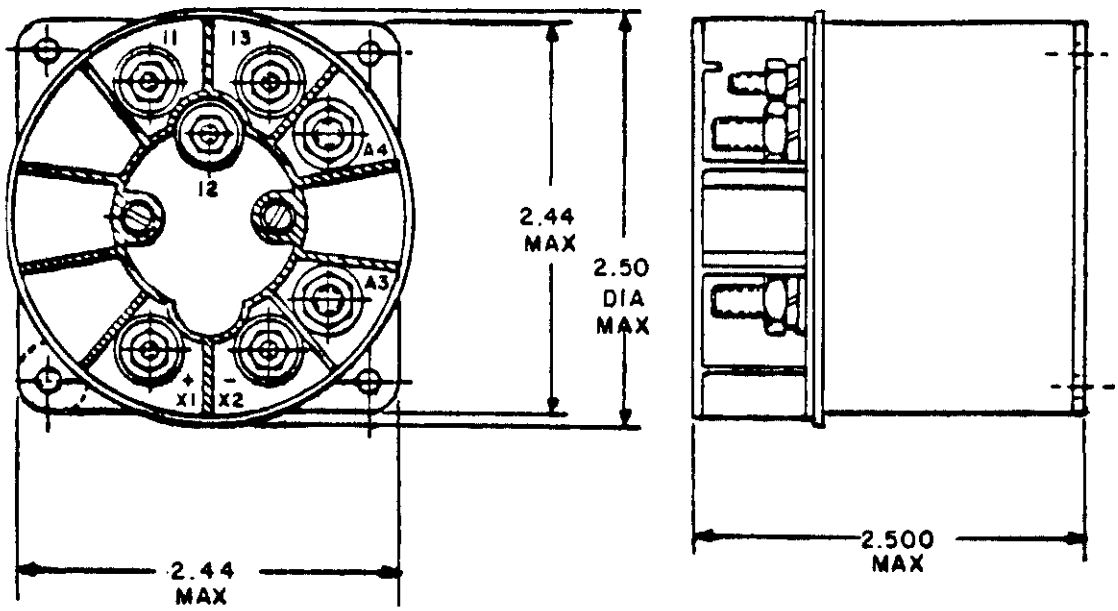

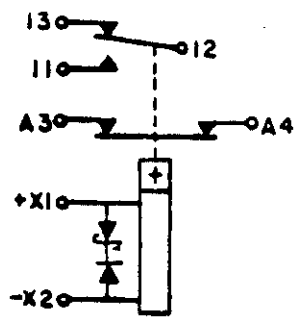

CIRCUIT DIAGRAM

INCHES	MM
2.44	6.20
2.50	6.35

FIGURE 302-56. Relay, EM, SPST, N.C., 50 amperes (MIL-R-6106/26).

Downloaded from http://www.everyspec.com

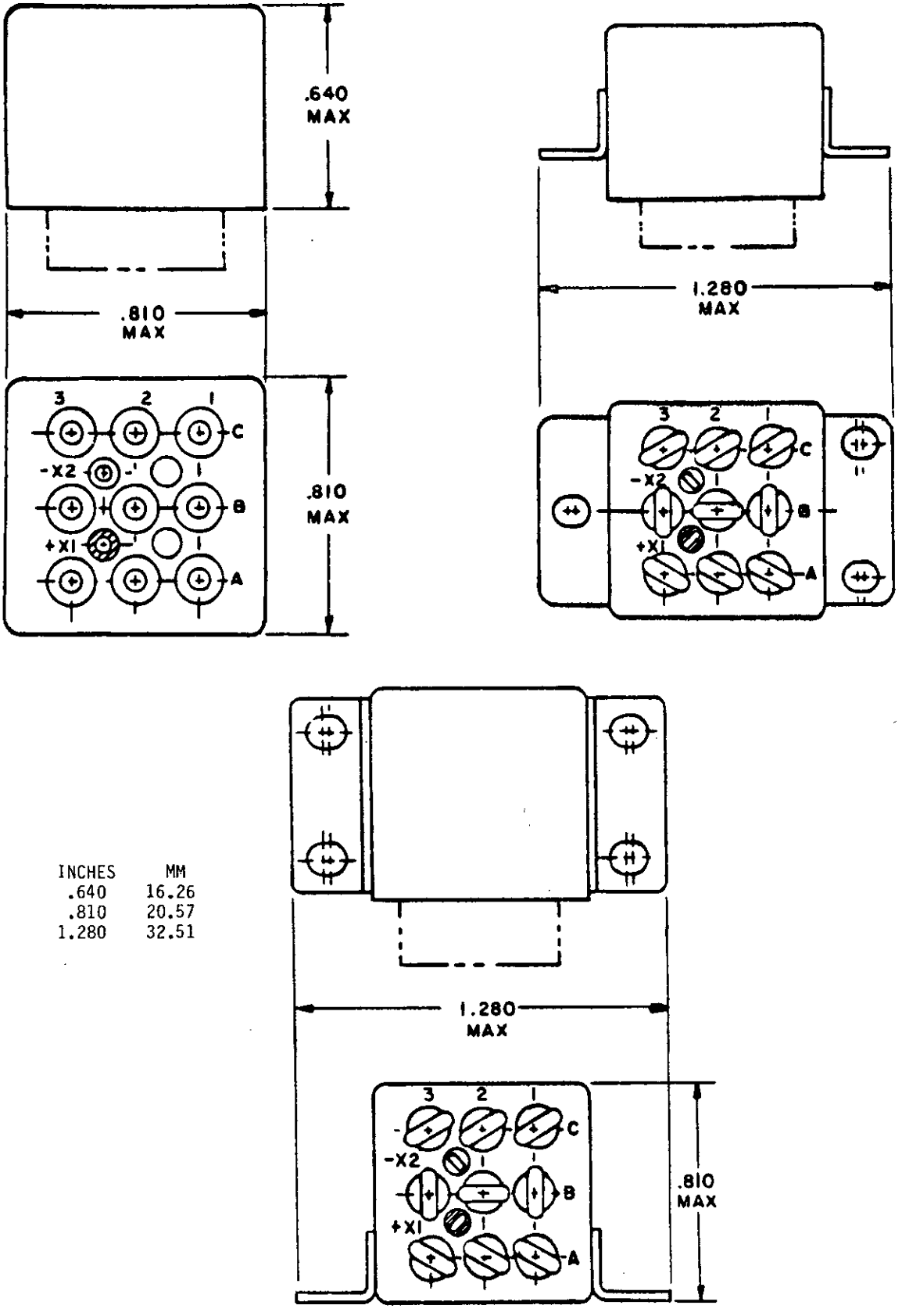

INCHES	MM
.640	16.26
.810	20.57
1.280	32.51

FIGURE 302-57. Relay, EM, low level to 10 amperes, 3PDT, permanent magnet drive (MIL-R-6106/29).

Downloaded from http://www.everyspec.com

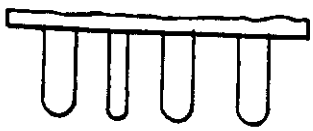

SOLDER PIN

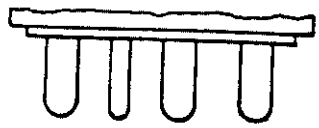

SOCKET PIN

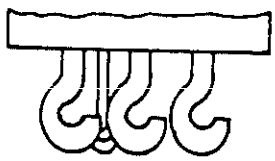

SOLDER HOOK

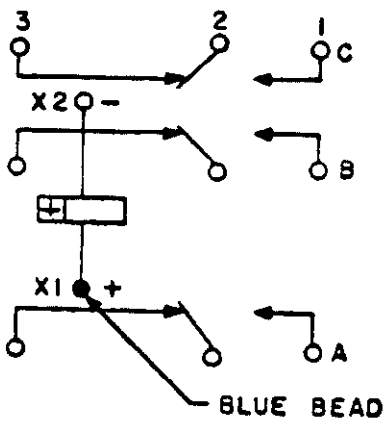

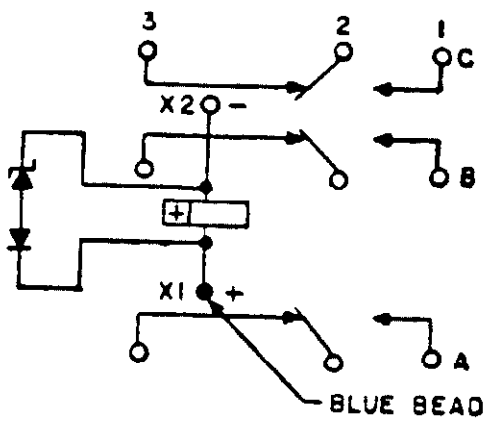

CIRCUIT DIAGRAMS

FIGURE 302-57. Relay, EM, low level to 10 amperes, 3PDT permanent magnet drive (MIL-R-6106/29) - Continued.

Downloaded from http://www.everyspec.com

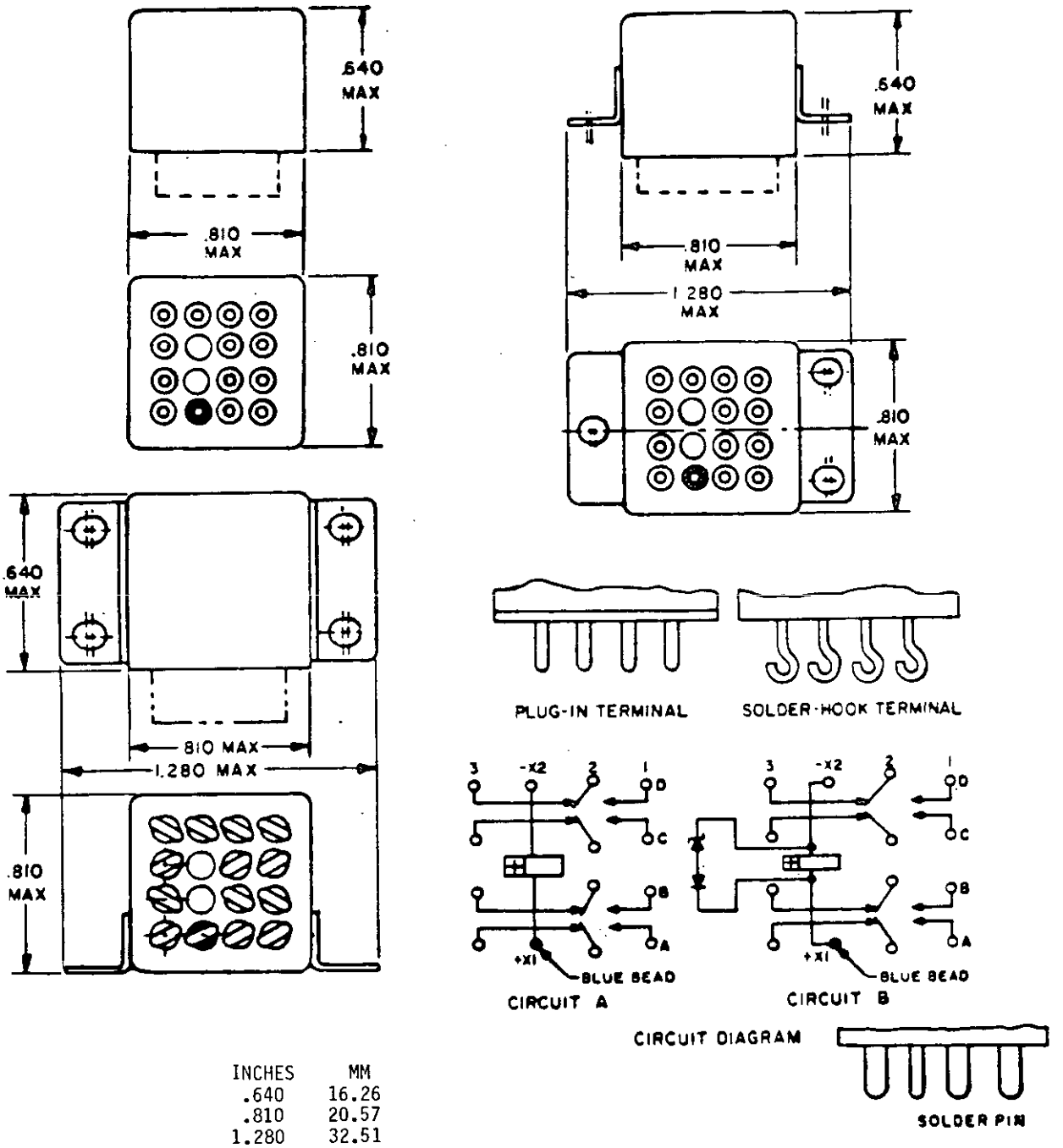

INCHES	MM
.640	16.26
.810	20.57
1.280	32.51

FIGURE 302-58. Relay, EM, low level to 5 amperes, 4PDT, permanent magnet drive (MIL-R-6106/28).

Downloaded from http://www.everyspec.com

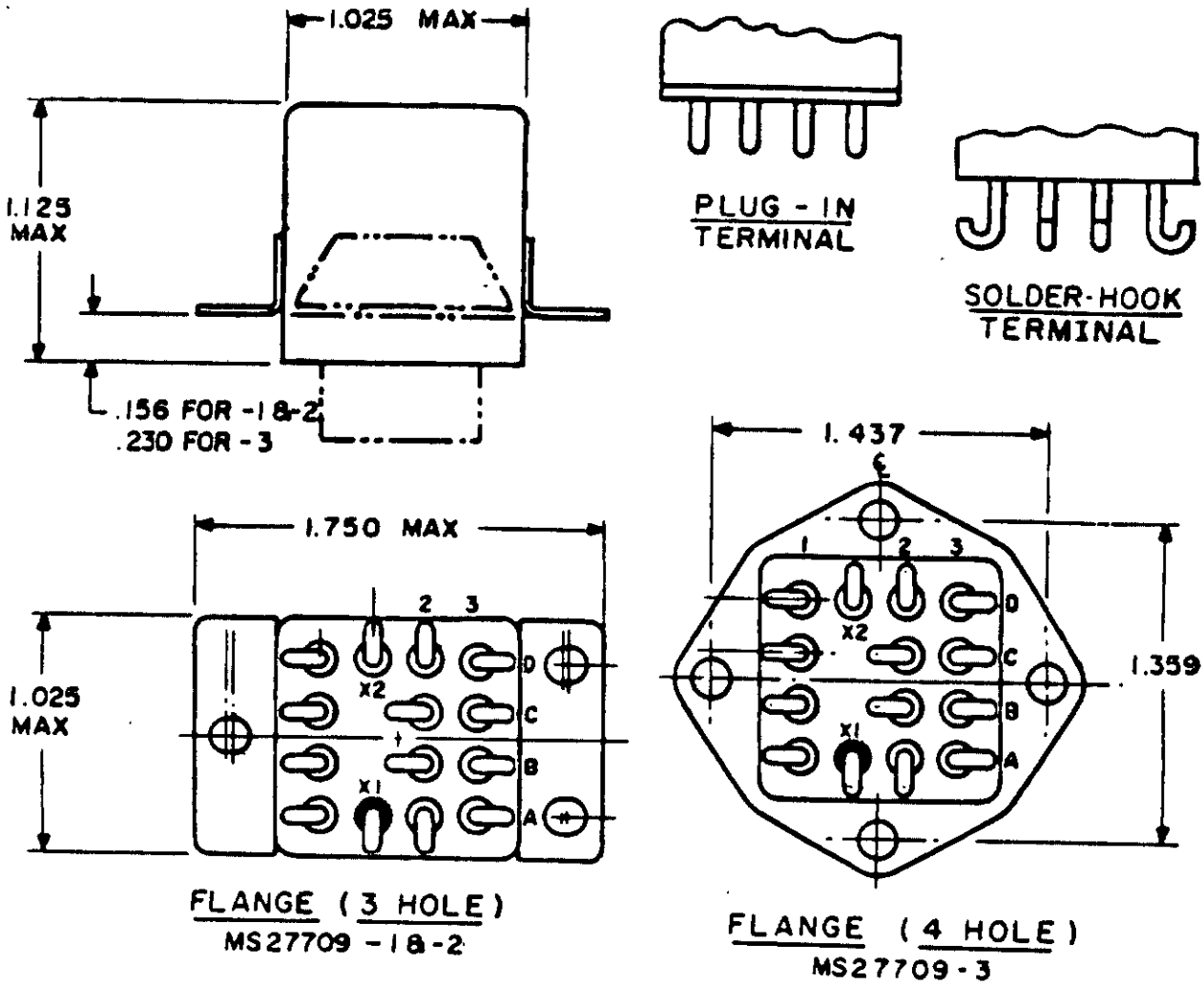

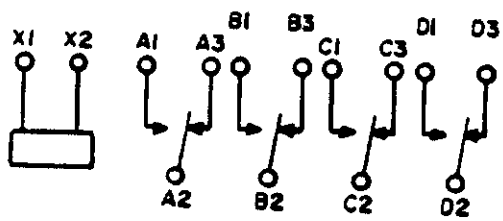

CIRCUIT

INCHES	MM
1.025	26.04
1.125	28.58
1.359	34.52
1.437	36.50

FIGURE 302-59. Relay, EM, 4PDT, 10 amperes (MS27709).

Downloaded from http://www.everyspec.com

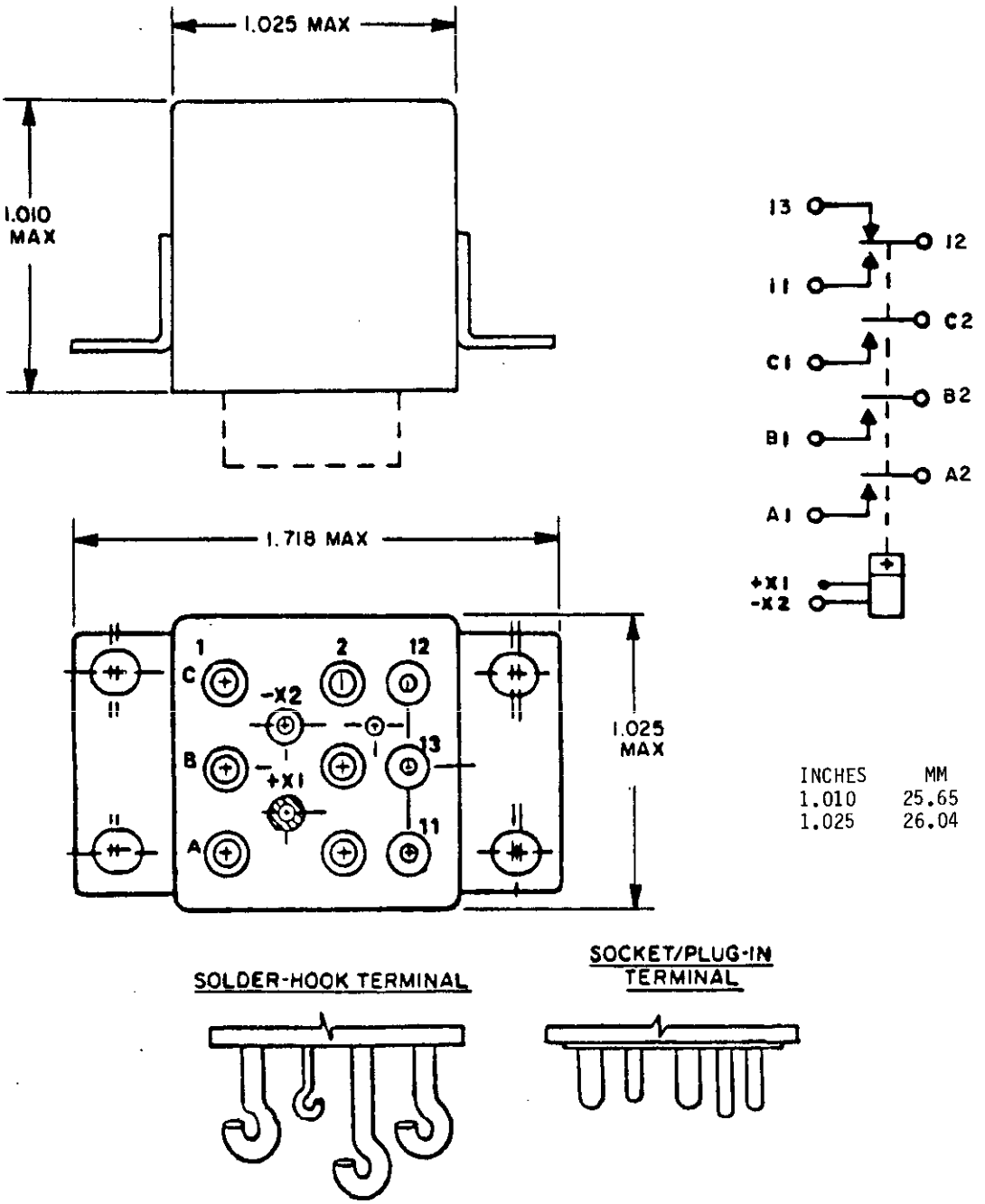

FIGURE 302-60. Relay, EM, 3PST, N.O., with 2 ampere, SPDT auxiliary contacts 25 amperes (MIL-R-6106/13).

Downloaded from http://www.everyspec.com

SUBSECTION 303

RELAYS, ELECTROMAGNETIC (EM), AC OPERATED (MIL-R-5757)

SCOPE: This section covers relays with coils ac voltage rated and contacts nominally rated up to and including 10 amperes for use in electronic equipment.

SUBSECTION 303

RELAYS, ELECTROMAGNETIC (EM), AC OPERATED

(Applicable specification: MIL-R-5757)

Duty cycle: Continuous
Altitude: 70,000 feet
Enclosure: Hermetically sealed
Rated coil voltage: 115 volts
Operating temperature range: B

TABLE 303.I. Relays, EM, ac operated, part numbers and characteristics.

Rated coil frequency Hz	Part number	Figure number	Shock (see table II)	Vibration (see table III)	System voltage and frequency - contact current in amperes																				Terminal style (see table IV)
					28 V dc				400 Hz								60 Hz								
									115 V 1-phase				115/200 V 3-phase				115 V 1-phase				115/200 V 3-phase				
					Resistive	Inductive	Motor	Lamp	Resistive	Inductive	Motor	Lamp	Resistive	Inductive	Motor	Lamp	Resistive	Inductive	Motor	Lamp	Resistive	Inductive	Motor	Lamp	
4PDT CONTACTS - 4 FORM C																									
	M5757/15																								
60	-005	301-5	3	5	5	3	---	0.8	5	3	---	0.8	---	---	---	---	---	---	---	---	---	---	---	---	L
400	-003	301-5	"	"	5	3	"	0.8	5	3	"	0.8	---	---	"	---	---	---	"	---	---	---	"	---	L
	M5757/18																								
50/60	-007	301-6	"	"	10	---	"	2	10	6	"	2	10	10	"	2	6	4	"	1.5	6	4	"	1.5	L
400	-003	301-6	"	"	10	---	"	2	10	6	"	2	10	10	"	2	6	4	"	1.5	6	4	"	1.5	L
6PDT CONTACTS - 6 FORM C																									
	M5757/16																								
60	-005	301-8	3	5	5	3	---	.8	5	3	---	.8	---	---	---	---	---	---	---	---	---	---	---	---	L
400	-003	301-8	3	5	5	3	---	.8	5	3	---	.8	---	---	---	---	---	---	---	---	---	---	---	---	L

Downloaded from http://www.everyspec.com

Downloaded from http://www.everyspec.com

SUBSECTION 304

RELAYS, ELECTROMAGNETIC (EM), AC OPERATED (MIL-R-6106)

SCOPE: This section covers ac voltage operated relays nominally rated 5 amperes and up for use in electrical systems. The relays are capable of meeting the electrical and environmental requirements when mounted directly to the structure.

RELAYS, ELECTROMAGNETIC (EM), AC OPERATED

(Applicable specification: MIL-R-6106)

Duty cycle: Continuous
Rated coil voltage: 115 V ac
Enclosure: Hermetically sealed
Shock: See specification

TABLE 304.I. Relays, EM, ac operated, part numbers and characteristics.

Part number	Figure number	Operating temp range (see table I)	Coil frequency Hz	Vibration (see table III)	System voltage and frequency-contact current in amperes																			
					28 V dc				400 Hz								50/60 Hz							
									115 V 1-phase				115/200 V 3-phase				115 V 1-phase				115/200 V 3-phase			
					Resistive	Inductive	Motor	Lamp	Resistive	Inductive	Motor	Lamp	Resistive	Inductive	Motor	Lamp	Resistive	Inductive	Motor	Lamp	Resistive	Inductive	Motor	Lamp
DPDT CONTACTS - 2 FORM C																								
MS24149-A1	302-15	G	400	4	10	10	6	2	10	10	6	2	---	---	---	---	---	---	---	---	---	---	---	---
MS25323-A2	302-17	"	400	"	"	6	4	"	"	6	4	2	10	6	4	2	6	4	3	1.5	6	4	3	1.5
MS25323-A3	302-17	"	50/60	"	"	6	4	"	"	6	4	2	10	6	4	2	6	4	3	1.5	6	4	3	1.5
MS25321-A2	302-18	"	400	"	5	3	1.5	.8	5	3	1.5	.8	---	---	---	---	4	2	1	0.6	---	---	---	---
MS25321-A3	302-18	"	50/60	"	"	"	"	"	"	"	"	"	"	"	"	"	"	"	"	"	"	"	"	"
MS25395-A1	302-41	"	400	"	"	"	"	"	"	"	"	"	"	"	"	"	"	"	"	"	"	"	"	"
MS25395-A3	302-41	"	50/60	"	"	"	"	"	"	"	"	"	"	"	"	"	"	"	"	"	"	"	"	"
MS25273-A1 1/	302-16	"	400	See	10	6	4	2	10	6	4	2	10	6	4	2	6	4	3	1.5	6	4	3	1.5
MS25273-A2	302-16	"	50/60	spec	"	6	"	"	"	6	"	"	"	6	"	"	6	4	3	1.5	6	4	3	1.5
MS27401																								
-28	302-40	"	50/400	2	"	8	"	"	"	8	"	"	"	8	"	"	2.5	2.5	2	1	2.5	2.5	2	1
-29	"	"	"	"	"	"	"	"	"	"	"	"	"	"	"	"	"	"	"	"	"	"	"	"
-30	"	"	"	"	"	"	"	"	"	"	"	"	"	"	"	"	"	"	"	"	"	"	"	"
-45	"	"	"	"	"	"	"	"	"	"	"	"	"	"	"	"	"	"	"	"	"	"	"	"
-54	"	"	"	"	"	"	"	"	"	"	"	"	"	"	"	"	"	"	"	"	"	"	"	"
-55	"	"	"	"	"	"	"	"	"	"	"	"	"	"	"	"	"	"	"	"	"	"	"	"
3PST CONTACTS - 3 FORM A																								
MS27222-3 1/	302-43	G	400	See	50	50	50	---	50	50	50	---	50	50	50	---	---	---	---	---	---	---	---	---
MS27222-4 1/2/	302-43	"	"	spec	50	50	50	---	50	50	50	---	50	50	50	---	---	---	---	---	---	---	---	---
MS27418-1A	302-45	"	"	"	25	15	20	10	25	25	20	10	25	25	20	10	25	25	12	10	25	25	12	10
MS27418-2A	"	"	"	"	"	"	"	"	"	"	"	"	"	"	"	"	"	"	"	"	"	"	"	"
MS27418-1C	"	"	50/60	"	"	"	"	"	"	"	"	"	"	"	"	"	"	"	"	"	"	"	"	"
MS27418-2C	"	"	50/60	"	"	"	"	"	"	"	"	"	"	"	"	"	"	"	"	"	"	"	"	"
MS27751-4 1/	302-21	D	400	"	---	"	15	10	50	50	40	15	50	50	40	15	---	---	---	---	---	---	---	---
MS27751-6 1/ 2/	302-21	D	400	"	---	"	15	10	50	50	40	15	50	50	40	15	---	---	---	---	---	---	---	---
3PST CONTACTS - 3 FORM X																								
MS24143																								
-A3	302-52	G	See	See	25	25	25	---	25	25	25	---	25	25	25	---	25	15	15	---	15	12.5	12.5	---
-A4 2/	302-52	G	spec	spec	25	25	25	---	25	25	25	---	25	25	25	---	25	15	15	---	15	12.5	12.5	---

See footnotes at end of table.

Downloaded from http://www.everyspec.com

TABLE 304.I. Relays, EM, ac operated, part numbers and characteristics - Continued.

Part number	Figure number	Operating temp range (see table 1)	Coil frequency Hz	Vibration (see table III)	System voltage and frequency-contact current in amperes																			
					28 V dc				400 Hz								50/60 Hz							
									115 V 1-phase				115/200 V 3-phase				115 V 1-phase				115/200 V 3-phase			
					Resistive	Inductive	Motor	Lamp	Resistive	Inductive	Motor	Lamp	Resistive	Inductive	Motor	Lamp	Resistive	Inductive	Motor	Lamp	Resistive	Inductive	Motor	Lamp
3PST CONTACTS - 3 FORM X - Continued																								
MS24168																								
-A3 1/	302-20	G	400	See spec	100	100	100	---	100	100	100	---	100	100	100	---	50	40	40	---	50	25	25	---
-A4 1/ 2/	302-20	"	"	"	100	100	100	"	100	100	100	"	100	100	100	"	50	40	40	"	50	25	25	
MS24376																								
-A3 1/	302-53	"	"	"	50	50	50	"	50	50	50	"	50	50	50	"	25	20	20	"	25	15	15	---
-A4 1/ 2/	302-53	"	"	"	50	50	50	"	50	50	50	"	50	50	50	"	25	"	20	"	25	15	15	
MS27997-A1	302-44	"	60/400	"	25	25	25	"	25	25	25	"	25	25	25	"	---	"	---	"	---		---	
MS27997-A2 2/	302-44	"	60/400	"	25	25	25	"	25	25	25	"	25	25	25	"	---	"	---	"	---		---	
3PDT CONTACTS - 3 FORM C																								
MS27751-2,-12 1/ 3/	302-21	D	400	See spec	---	15	15	---	50	50	40	15	50	50	40	15	---	---	---	---	---	---	---	---
MS27751-8,-18 1/ 2/ 3/	302-21	"	"	"	"	"	"	"	"	"	"	"	"	"	"	"	"	"	"	"	"	"	"	"
MS27751-10,-20 1/ 2/ 3/	302-21	"	"	"	"	"	"	"	"	"	"	"	"	"	"	"	"	"	"	"	"	"	"	"
MS27743																								
-19	302-25	G	50/400	"	25	12	10	5	25	15	10	5	25	15	10	5	"	"	"	"	"	"	"	"
-20	"	"	"	"	"	"	"	"	"	"	"	"	"	"	"	"	"	"	"	"	"	"	"	"
-21	"	"	"	"	"	"	"	"	"	"	"	"	"	"	"	"	"	"	"	"	"	"	"	"
MS27715-2	302-10	"	400	"	150	100	100	"	150	100	100	"	150	100	100	---	100	"	"	"	100	"	"	"
4PDT CONTACTS - 4 FORM C																								
MS27254-1	302-48	G	400	6	10	10	5	3	10	10	5	3	10	10	5	3	---	---	---	---	---	---	---	---
MS27255-1	302-28	"	"	"	"	"	"	"	"	"	"	"	"	"	"	"	"	"	"	"	"	"	"	"
MS27255-3	302-28	"	"	"	"	"	"	"	"	"	"	"	"	"	"	"	"	"	"	"	"	"	"	"
MS27400																								
-26	302-49	"	50/400	See spec	"	8	4	2	"	8	4	2	"	8	4	2	2.5	2.5	2	1	2.5	2.5	2	1
-27	"	"	"	"	"	"	"	"	"	"	"	"	"	"	"	"	"	"	"	"	"	"	"	"
-28	"	"	"	"	"	"	"	"	"	"	"	"	"	"	"	"	"	"	"	"	"	"	"	"
-39	"	"	"	"	"	"	"	"	"	"	"	"	"	"	"	"	"	"	"	"	"	"	"	"
-48	"	"	"	"	"	"	"	"	"	"	"	"	"	"	"	"	"	"	"	"	"	"	"	"
-49	"	"	"	"	"	"	"	"	"	"	"	"	"	"	"	"	"	"	"	"	"	"	"	"
MS25271-A1 1/	302-29	"	400	4	"	6	"	"	"	6	"	"	"	6	"	"	6	4	3	1.5	6	4	3	1.5
MS25327-A1 1/	302-31	"	"	"	"	6	"	"	"	6	"	"	"	6	"	"	6	4	3	1.5	6	4	3	1.5
MS25267-A1 1/	302-32	"	"	"	5	3	1.5	.8	5	3	1.5	.8	---	---	---	---	4	2	1	.6	---	---	---	---

See footnotes at end of table.

1006 22560

Downloaded from http://www.everyspec.com

TABLE 304.I. Relays, EM, ac operated, part numbers and characteristics - Continued.

Part number	Figure number	Operating temp range (see table I)	Coil frequency Hz	Vibration (see table III)	System voltage and frequency-contact current in amperes																			
					400 Hz												50/60 Hz							
					28 V dc				115 V 1-phase				115/200 V 3-phase				115 V 1-phase				115/200 V 3-phase			
					Resistive	Inductive	Motor	Lamp	Resistive	Inductive	Motor	Lamp	Resistive	Inductive	Motor	Lamp	Resistive	Inductive	Motor	Lamp	Resistive	Inductive	Motor	Lamp
4PDT CONTACTS - 4 FORM C - Continued																								
MS25325-A2	302-33	G	50/400	4	5	3	1.5	.8	5	3	1.5	.8	---	---	---	---	4	2	1	.6	---	---	---	---
MS24568-A1	302-27	"	400	See spec	10	10	6	3	15	10	6	3	15	10	6	3	10	6	4	2	10	6	4	2
MS24568-A2	302-27	"	50/60		10	10	6	3	15	10	6	3	15	10	6	3	10	6	4	2	10	6	4	2
6PDT CONTACTS - 6 FORM C																								
MS25329-A1 1/	302-34	G	400	4	5	3	1.5	.8	5	3	1.5	.8	---	---	---	---	4	2	1	.6	---	---	---	---
MS25269-A1 1/	302-35	G	400	4	5	3	1.5	.8	5	3	1.5	.8	---	---	---	---	4	2	1	.6	---	---	---	---
6PDT CONTACTS - 6 FORM C, MAGNET DRIVE																								
M6106/8																								
-003	302-54	G	400	6	10	8	4	2	10	8	4	2	10	8	4	2	---	---	---	---	---	---	---	---
-004	302-54	G	400	6	10	8	4	2	10	8	4	2	10	8	4	2	---	---	---	---	---	---	---	---

1/ Capable of being derated to 60 Hz (see specification).

2/ Relay possesses auxiliary contacts (see specification).

3/ This relay is designed for load transfer; other relays should not be used to transfer loads.

Downloaded from http://www.everyspec.com

Downloaded from http://www.everyspec.com

SUBSECTION 305

RELAYS, ELECTROMAGNETIC (EM), SENSITIVE (MIL-R-5757/13)

SCOPE: This section covers relays designed to operate with input coil power of 100 milliwatts or less (as applicable).

SUBSECTION 305

RELAYS, EM, SENSITIVE

(Applicable specification: MIL-R-5757)

Duty cycle: Continuous
Altitude: 70,000 feet
Enclosure: Hermetically sealed
Operating temperature range: B (see table I)

TABLE 305.I 1/ Relays, EM, sensitive, dc operated, part numbers and characteristics.

Rated coil current, nom (milli-amperes)	Part number	Figure number	Shock (see table II)	Vibration (see table III)	System voltage and frequency-contact current in amperes									Terminal style (see table IV)
					28 V dc			400 Hz 115 V 1-phase			60 Hz 115 V 1-phase			
					Resistive	Inductive @ 0.32 H	Lamp	Resistive	Inductive	Lamp	Resistive	Inductive	Lamp	
DPDT CONTACTS - 2 FORM C														
	M5757/13 Flange													
4	-050	305-1	3	5	2.0	0.75	0.1	0.3	---	---	0.3	---	---	L
"	-060	"	"	"	"	"	"	"	"	"	"	"	"	SP
	Bracket													
"	-081	"	"	"	"	"	"	"	"	"	"	"	"	L
	Flange													
6	-048	"	"	"	"	"	"	"	"	"	"	"	"	L
"	-058	"	"	"	"	"	"	"	"	"	"	"	"	SP
	Bracket													
"	-079	"	"	"	"	"	"	"	"	"	"	"	"	L
	Flange													
8	-047	"	"	"	"	"	"	"	"	"	"	"	"	L
"	-057	"	"	"	"	"	"	"	"	"	"	"	"	SP
	Bracket													
"	-078	"	"	"	"	"	"	"	"	"	"	"	"	L
	Flange													
13	-044	"	"	"	"	"	"	"	"	"	"	"	"	L
"	-054	"	"	"	"	"	"	"	"	"	"	"	"	SP
	Bracket													
"	-075	"	"	"	"	"	"	"	"	"	"	"	"	L

See footnotes at end of table.

Downloaded from http://www.everyspec.com

TABLE 305.I 1/ Relays, EM, sensitive, dc operated, part numbers and characteristics - Continued.

Rated coil current, nom (milli-amperes)	Part number	Figure number	Shock (see table II)	Vibration (see table III)	System voltage and frequency-contact current in amperes									Terminal style (see table IV)
					28 V dc			400 Hz 115 V 1-phase			60 Hz 115 V 1-phase			
					Resis-tive	Induc-tive @ 0.32 H	Lamp	Resis-tive	Induc-tive	Lamp	Resis-tive	Induc-tive	Lamp	
DPDT CONTACTS - 2 FORM C - Continued														
	M5757/13													
	Flange													
18	-043	305-1	3	5	2.0	0.75	0.1	0.3	---	---	0.3	---	---	L,
"	-053	"	"	"	"	"	"	"	"	"	"	"	"	SP
	Bracket													
"	-074	"	"	"	"	"	"	"	"	"	"	"	"	L
	Flange													
40	-042	"	"	"	"	"	"	"	"	"	"	"	"	L
"	-052	"	"	"	"	"	"	"	"	"	"	"	"	SP
	Bracket													
"	-073	"	"	"	"	"	"	"	"	"	"	"	"	L
	Flange													
90	-041	"	"	"	"	"	"	"	"	"	"	"	"	L
"	-051	"	"	"	"	"	"	"	"	"	"	"	"	SP
	Bracket													
"	-072	"	"	"	"	"	"	"	"	"	"	"	"	L

1/ These relays are not recommended in critical applications or in applications where a less sensitive relay can be used.

Downloaded from http://www.everyspec.com

Downloaded from http://www.everyspec.com

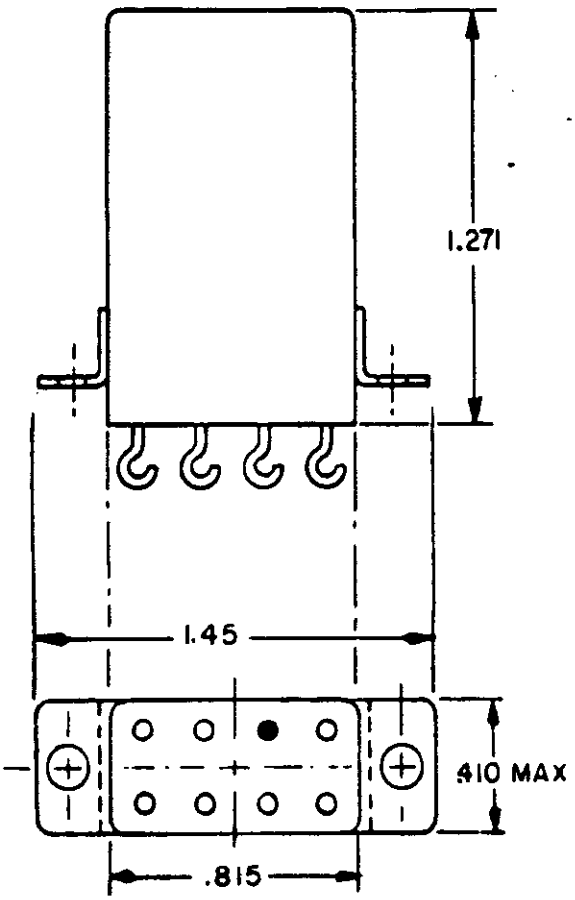

FLANGE MOUNT A

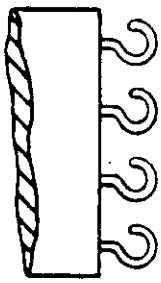

SOLDER LUG

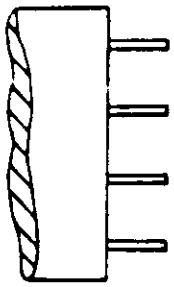

PIN

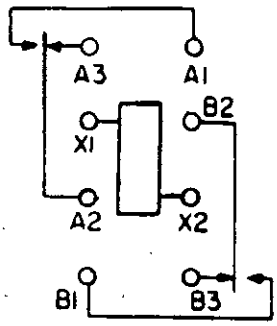

CIRCUIT DIAGRAM

INCHES	MM
.410	10.41
.810	20.70
1.271	30.73
1.45	36.83

FIGURE 305-1. Relay, EM, DPDT, 2 amperes, (sensitive, 40 milliwatts) (MIL-R-5757/13).

Downloaded from http://www.everyspec.com

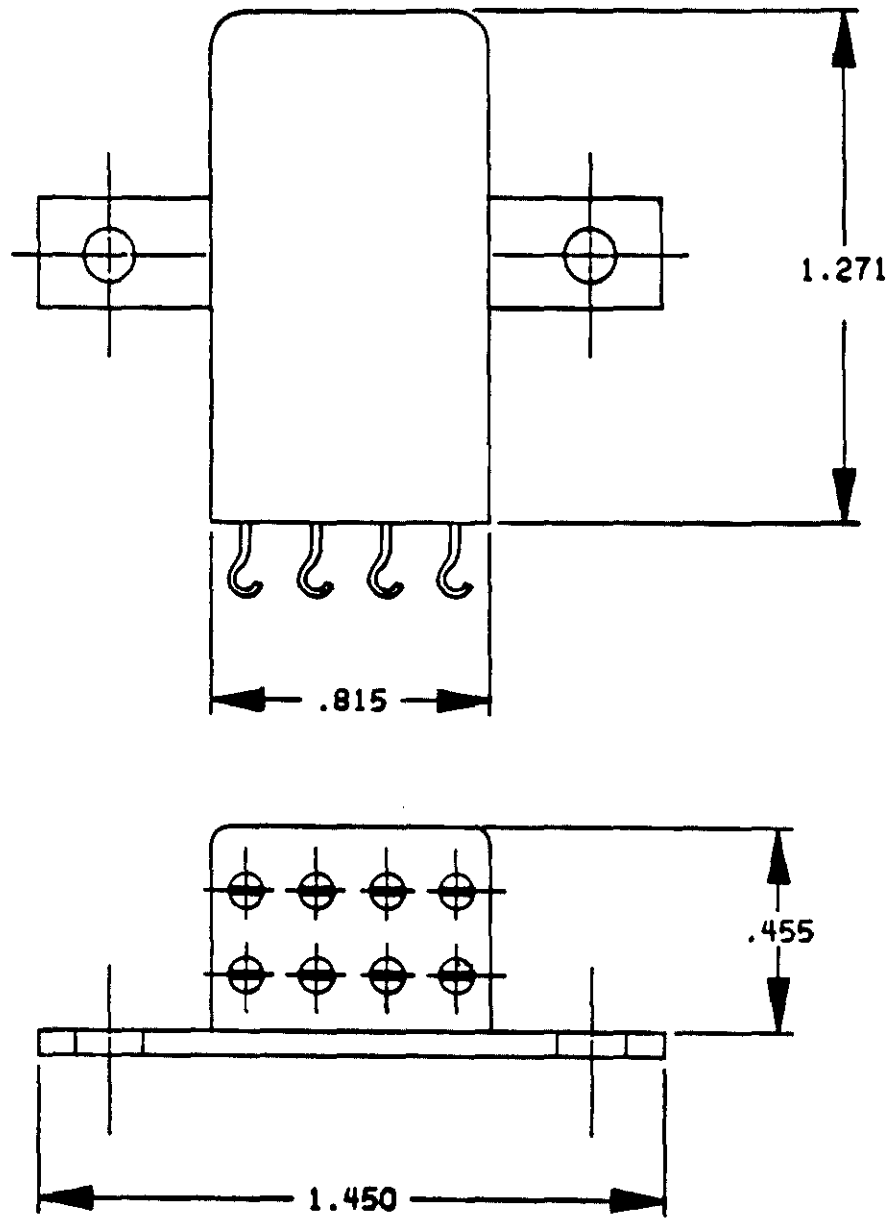

BRACKET MOUNT C

FIGURE 305-1. Relay, EM, DPDT, 2 amperes, (sensitive, 40 milliwatts) (MIL-R-5757/13) - Continued.

Downloaded from http://www.everyspec.com

SUBSECTION 306

RELAYS, ELECTROMAGNETIC (EM), LATCHING, DC OPERATED

(Applicable specification: MIL-R-6106)

SCOPE: This subsection covers relays with coils dc voltage rated. Latching relays maintain their contacts in the last position assumed without the need of maintaining coil energization.

SUBSECTION 306

RELAYS, ELECTROMAGNETIC (EM), LATCHING, DC OPERATED

(Applicable specification: MIL-R-6106)

Duty cycle: Continuous
Enclosure: Hermetically sealed
Operating temperature range: B (see table I)

TABLE 306.I. Relays, EM, latching, dc operated, part number and characteristics.

Rated coil frequency Hz	Part number	Figure number	Shock (see table II)	Vibration (see table III)	System voltage and frequency - contact current in amperes																				Terminal style (see table IV)
					28 V dc				400 Hz								60 Hz								
									115 V 1-phase				115/200 V 3-phase				115 V 1-phase				115/200 V 3-phase				
					Resistive	Inductive	Motor	Lamp	Resistive	Inductive	Motor	Lamp	Resistive	Inductive	Motor	Lamp	Resistive	Inductive	Motor	Lamp	Resistive	Inductive	Motor	Lamp	
SPDT CONTACTS - 1 FORM C																									
	M6106/20																								
28.0	-001	306-1	See	See	25	12	10	5	25	15	10	5	---	---	---	---	---	---	---	---	---	---	---	---	L
28.0	-002	306-1	spec	spec	25	12	10	5	25	15	10	5	---	---	---	---	---	---	---	---	---	---	---	---	SKP
DPDT CONTACTS - 2 FORM C																									
28.0	MS25457-D1	306-2	1	4	10.0	6.0	4.0	2.0	10.0	10.0	4.0	2.0	10.0	10.0	4.0	2.0	6	4	3	1.5	6	4	3	1.5	SKP
"	MS25466-D1	306-3	"	"	10.0	6.0	4.0	2.0	10.0	10.0	4.0	2.0	10.0	10.0	4.0	2.0	6	4	3	1.5	6	4	3	1.5	L
"	MS25455-D1	306-4	"	"	5.0	3.0	1.5	.8	5.0	3.0	1.5	.8	---	---	---	---	4	2	1	0.6	---	---	---	---	SKP
"	MS25465-D1	306-5	"	"	5.0	3.0	1.5	.8	5.0	3.0	1.5	.8	---	---	---	---	4	2	1	0.6	"	"	"	"	L
	MS27744																								
"	-1	306-6	See	See	10.0	8	4	2	10	8	4	2	10	8	4	2	---	---	---	---	"	"	"	"	L
"	-2	306-6	spec	spec	10.0	8	4	2	10	8	4	2	10	8	4	2	"	"	"	"	"	"	"	"	SKP
	M6106/38																								
"	-001	306-16	6	"	5	3	2	1	5	5	3	1	5	5	3	1	"	"	"	"	"	"	"	"	L
"	-002	"	"	"	"	"	"	"	"	"	"	"	"	"	"	"	"	"	"	"	"	"	"	"	SKP
"	-003	"	"	"	"	"	"	"	"	"	"	"	"	"	"	"	"	"	"	"	"	"	"	"	SP
3PDT CONTACTS - 3 FORM C																									
28.0	MS27742-1	306-8	6	9	25	12	10	5	25	15	10	5	25	15	10	5	---	---	---	---	---	---	---	---	L
"	MS27742-2	306-8	6	9	25	12	10	5	25	15	10	5	25	15	10	5	"	"	"	"	"	"	"	"	SKP
	MS27749 1/																								
"	-1 2/	306-7	1	See	50	20	20	10	60	60	40	15	60	60	40	15	"	"	"	"	"	"	"	"	STUD
"	-2 2/	306-7	1	spec	50	20	20	10	60	60	40	15	60	60	40	15	"	"	"	"	"	"	"	"	STUD
	M6106/40																								
"	-001	306-17	6	"	10	6	4	2	10	8	4	2	10	8	4	2	"	"	"	"	"	"	"	"	L
"	-002	"	"	"	"	"	"	"	"	"	"	"	"	"	"	"	"	"	"	"	"	"	"	"	SKP
"	-003	"	"	"	"	"	"	"	"	"	"	"	"	"	"	"	"	"	"	"	"	"	"	"	SP
3PNO CONTACTS - 3 FORM A - WITH DPDT AUXILIARY																									
	M6106/12																								
28.0	-001	306-19	6	9	25	12	10	5	25	15	10	5	25	15	10	5	---	---	---	---	---	---	---	---	L
28.0	-002	306-19	6	9	25	12	10	5	25	15	10	5	25	15	10	5	---	---	---	---	---	---	---	---	SKP

See footnotes at end of table.

Downloaded from http://www.everyspec.com

TABLE 306.I. Relays, EM, latching, dc operated, part number and characteristics - Continued.

Rated coil frequency Hz	Part number	Figure number	Shock (see table II)	Vibration (see table III)	System voltage and frequency - contact current in amperes																				Terminal style (see table IV)
					28 V dc				400 Hz								60 Hz								
									115 V 1-phase				115/200 V 3-phase				115 V 1-phase				115/200 V 3-phase				
					Resistive	Inductive	Motor	Lamp	Resistive	Inductive	Motor	Lamp	Resistive	Inductive	Motor	Lamp	Resistive	Inductive	Motor	Lamp	Resistive	Inductive	Motor	Lamp	
4PDT CONTACTS - 4 FORM C																									
28.0	MS25461-D1	306-9	1	4	10.0	6.0	4.0	2.0	10.0	10.0	4.0	2.0	10.0	10.0	4.0	2.0	6	4	3	1.5	6	4	3	1.5	SKP
"	MS25468-D1	306-10	"	"	10.0	6.0	4.0	2.0	10.0	10.0	4.0	2.0	10.0	10.0	4.0	2.0	6	4	3	1.5	6	4	3	1.5	L
"	MS25459-D1	306-11	"	"	5.0	3.0	1.5	0.8	5.0	3.0	1.5	0.8	---	---	---	---	4	2	1	0.6	---	---	---	---	SKP
"	MS25467-D1	306-12	"	"	5.0	3.0	1.5	0.8	5.0	3.0	1.5	0.8	---	---	---	---	4	2	1	0.6	---	---	---	---	L
	MS27745																								
"	-1	306-13	6	9	10.0	8.0	4.0	2.0	10.0	8.0	4.0	2.0	10.0	8.0	4.0	2.0	---	---	---	---	---	---	---	---	L
"	-2	"	"	"	"	"	"	"	"	"	"	"	"	"	"	"	"	"	"	"	"	"	"	"	SKP
"	-5 3/	"	"	"	"	"	"	"	"	"	"	"	"	"	"	"	"	"	"	"	"	"	"	"	SKP
	M6106/39																								
"	-001	306-18	"	See spec	5	3	2	1	5	5	3	1	5	5	3	1	"	"	"	"	"	"	"	"	L
"	-002	"	"	"	"	"	"	"	"	"	"	"	"	"	"	"	"	"	"	"	"	"	"	"	SKP
"	-003	"	"	"	"	"	"	"	"	"	"	"	"	"	"	"	"	"	"	"	"	"	"	"	SP
6PDT CONTACTS - 6 FORM C																									
28.0	MS25463-D1	306-14	3	4	5.0	3.0	1.5	0.8	5.0	3.0	1.5	0.8	---	---	---	---	4	.2	1	0.6	---	---	---	---	SKP
28.0	MS25469-D1	306-15	3	4	5.0	3.0	1.5	0.8	5.0	3.0	1.5	0.8	---	---	---	---	4	.2	1	0.6	---	---	---	---	L

1/ This relay is designed for load transfer; other relays should not be used to transfer loads. See spec sheet for load transfer ratings.

2/ Operating temperature range -55°C to 71°C.

3/ With coil transient suppression.

Downloaded from http://www.everyspec.com

Downloaded from http://www.everyspec.com

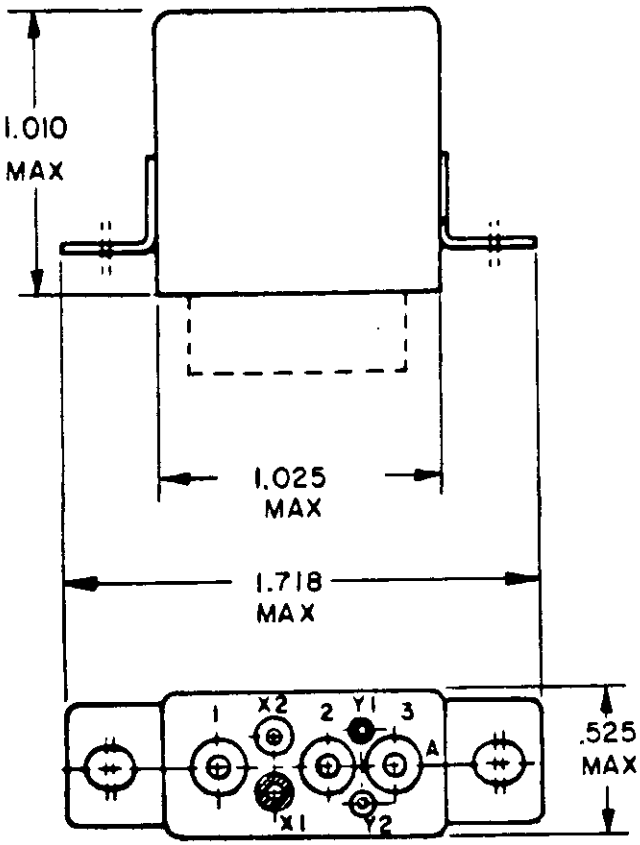

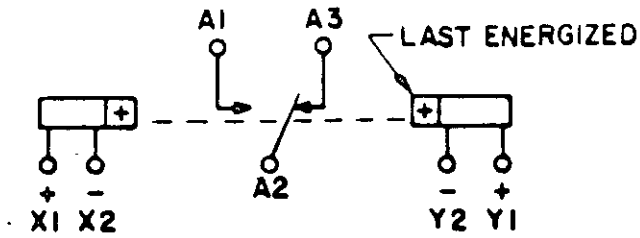

CIRCUIT DIAGRAM
(POLARIZED BISTABLE)

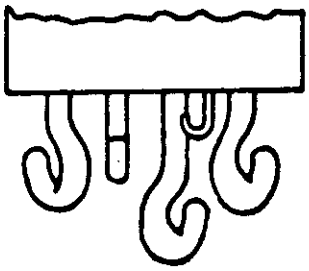

SOLDER HOOK TERMINAL
FOR -001

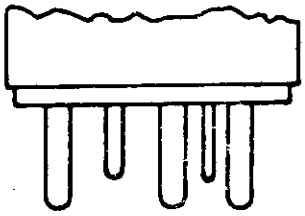

PLUG-IN TERMINAL
FOR -002

INCHES	MM
.525	13.34
1.010	25.65
1.025	26.04
1.718	43.64

FIGURE 306-1. Relay, EM, latch, SPDT, 25 amperes (MIL-R-6106/20).

Downloaded from http://www.everyspec.com

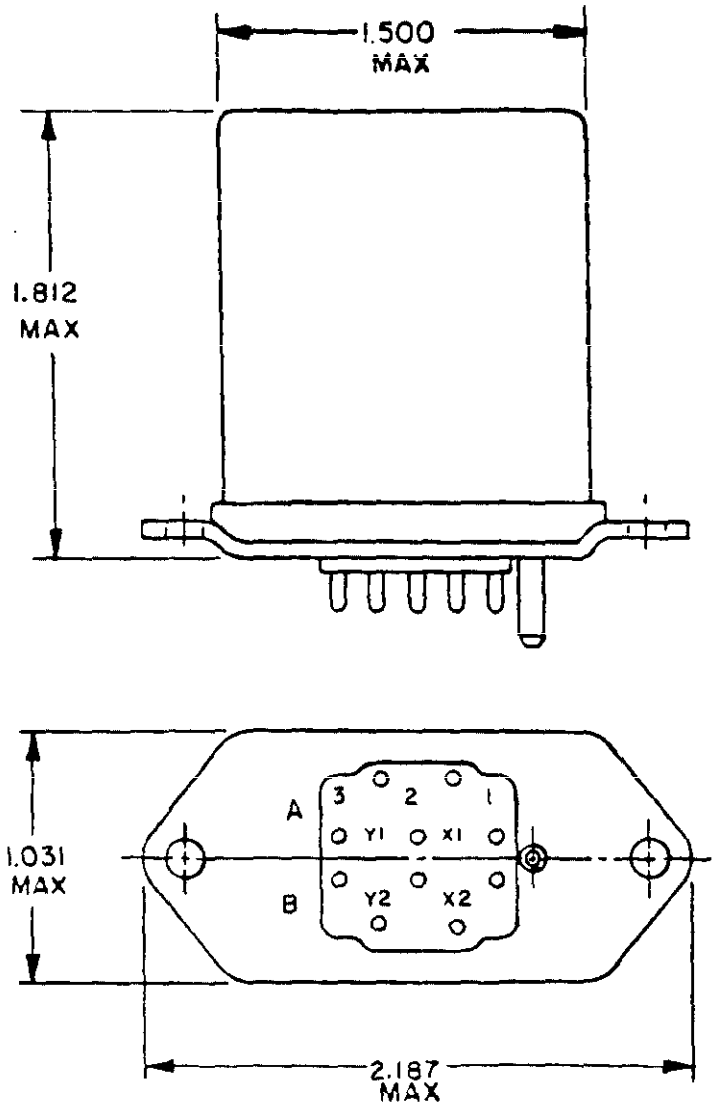

INCHES	MM
1.031	26.19
1.500	38.10
1.812	46.02
2.187	55.55

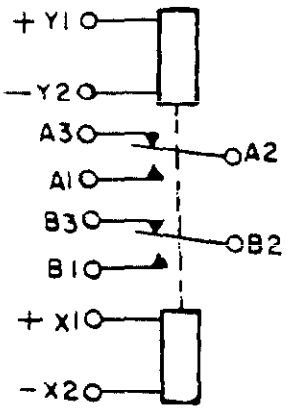

CIRCUIT DIAGRAM

To close No. 1 contacts energize X1 and X2
To close No. 3 contacts energize Y1 and Y2

FIGURE 306-2. Relay, EM, latch, DPDT, 10 amperes (MS25457).

Downloaded from http://www.everyspec.com

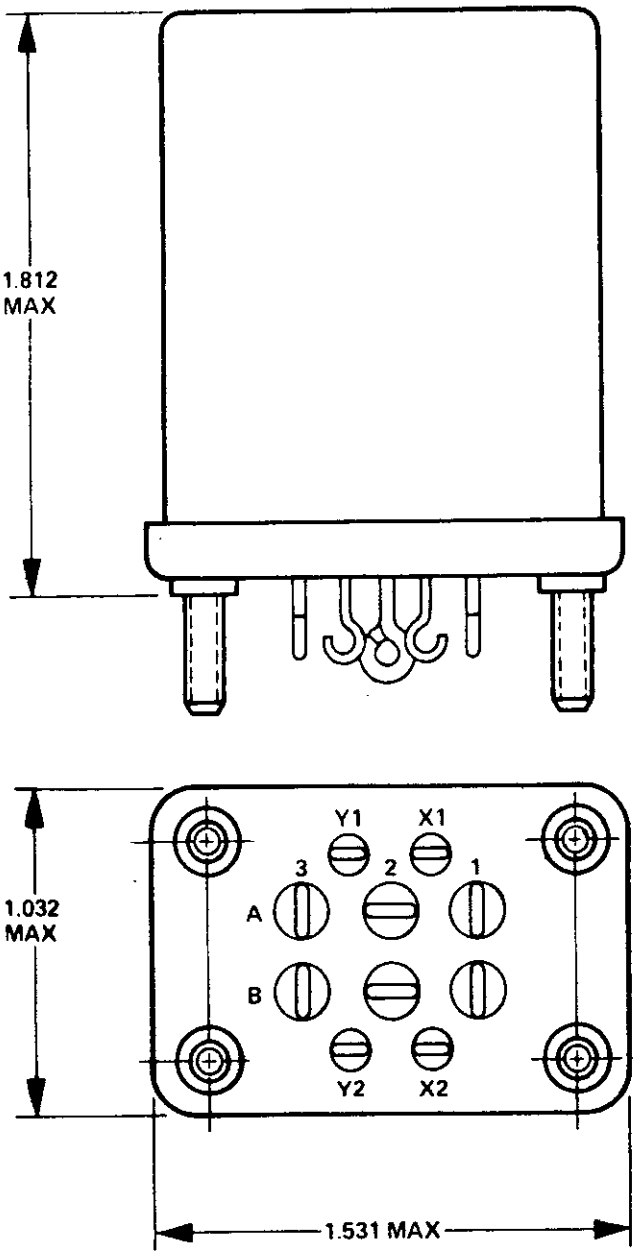

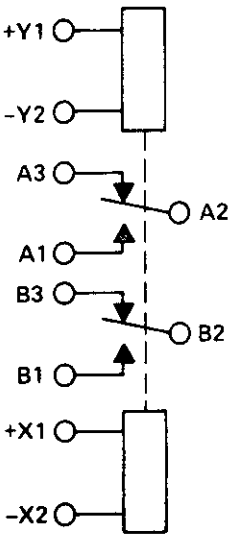

INCHES	MM
1.031	26.21
1.531	38.89
1.812	46.02

To close No. 1 contacts energize X1 and X2
To close No. 3 contacts energize Y1 and Y2

FIGURE 306-3. Relay, EM, latch, DPDT, 10 amperes (MS25466).

Downloaded from http://www.everyspec.com

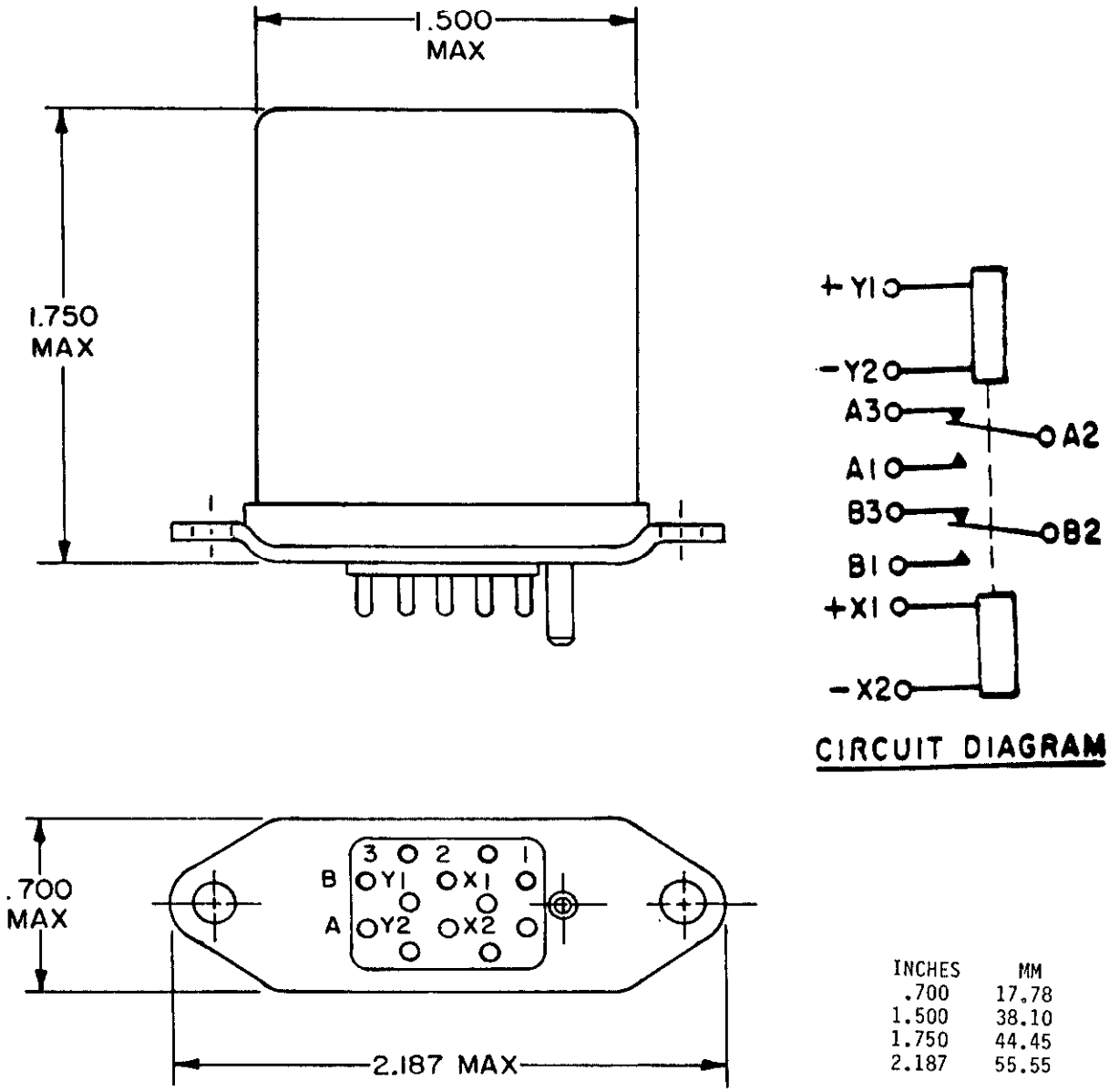

INCHES	MM
.700	17.78
1.500	38.10
1.750	44.45
2.187	55.55

To close No. 1 contacts energize X1 and X2
To close No. 3 contacts energize Y1 and Y2

FIGURE 306-4. Relay, EM, latch, DPDT, 5 amperes (MS25455).

Downloaded from http://www.everyspec.com

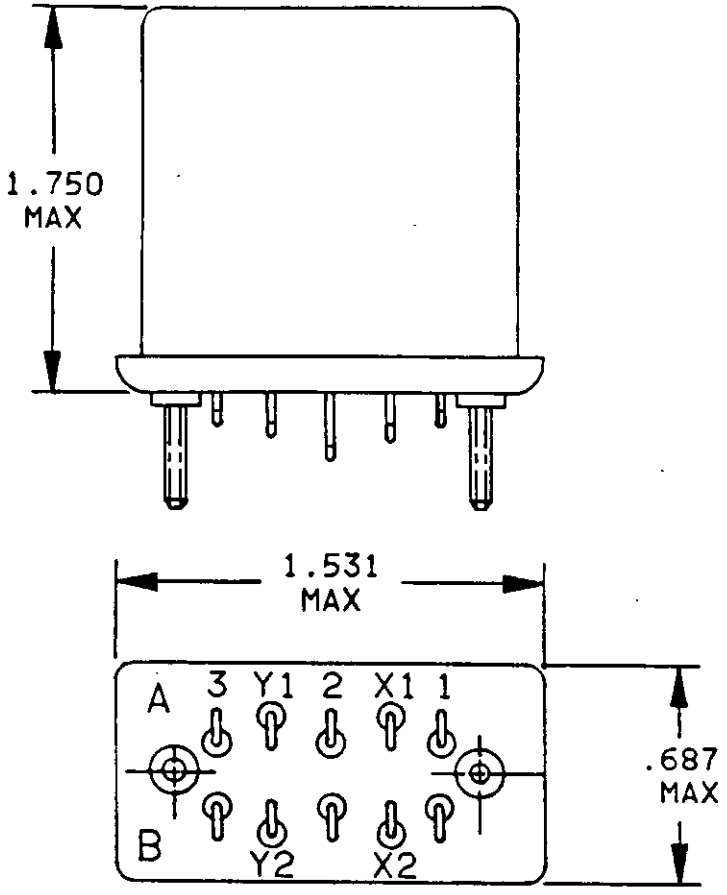

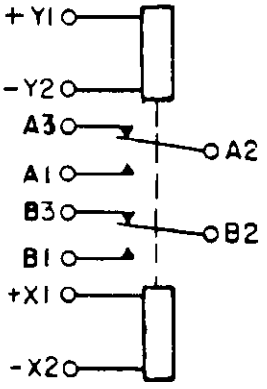

CIRCUIT DIAGRAM

To close No. 1 contacts energize X1 and X2
To close No. 3 contacts energize Y1 and Y2

INCHES	MM
.687	17.45
1.531	38.89
1.750	44.45

FIGURE 306-5. Relay, EM, latch, DPDT, 5 amperes (MS25465).

Downloaded from http://www.everyspec.com

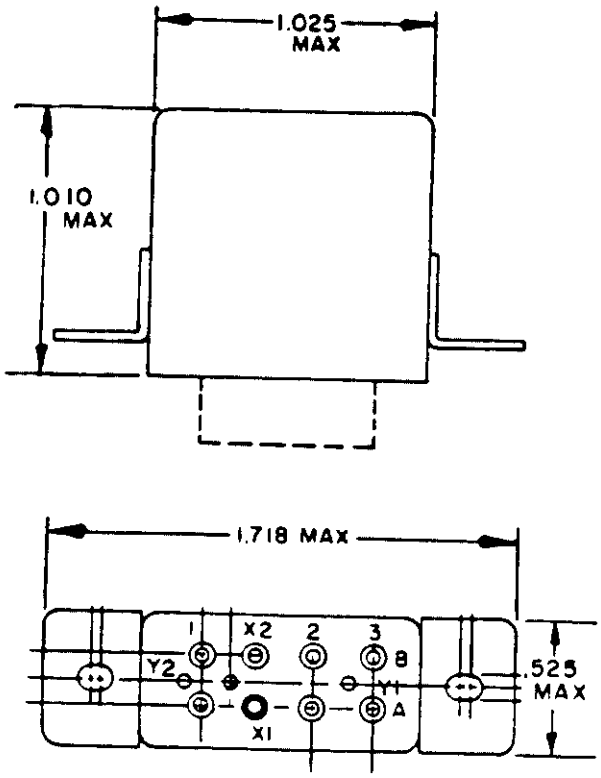

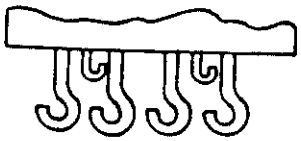

SOLDER-HOOK TERMINAL

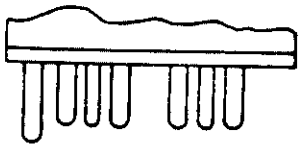

PLUG-IN TERMINAL

INCHES	MM
.525	13.34
1.010	25.65
1.025	26.04
1.718	43.64

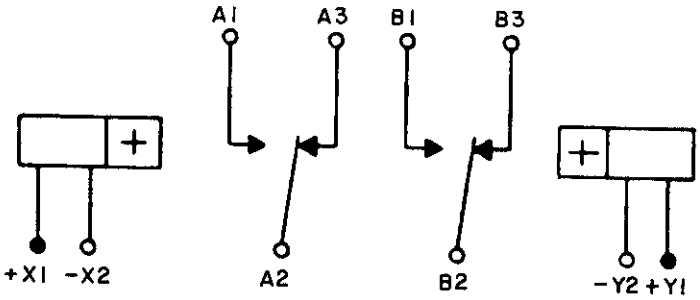

CIRCUIT DIAGRAM

FIGURE 306-6. Relay, EM, latch, DPDT, 10 amperes (MS27744).

Downloaded from http://www.everyspec.com

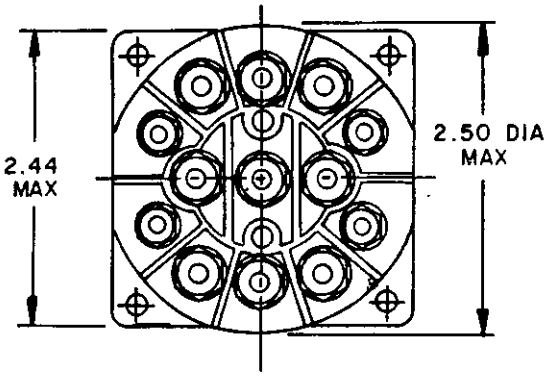

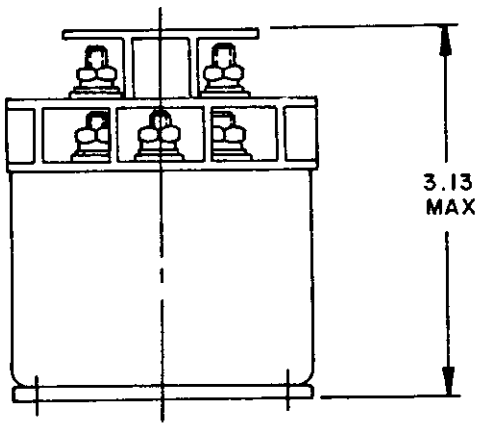

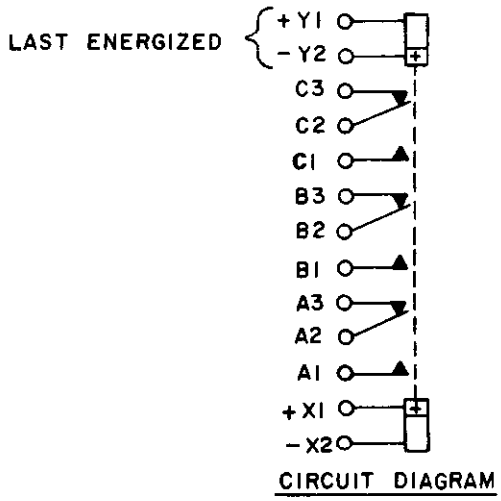

INCHES	MM
2.44	61.98
2.50	63.50
3.13	79.50

FIGURE 306-7. Relay, EM, latch, 3PDT, 50 amperes (MS27749).

Downloaded from http://www.everyspec.com

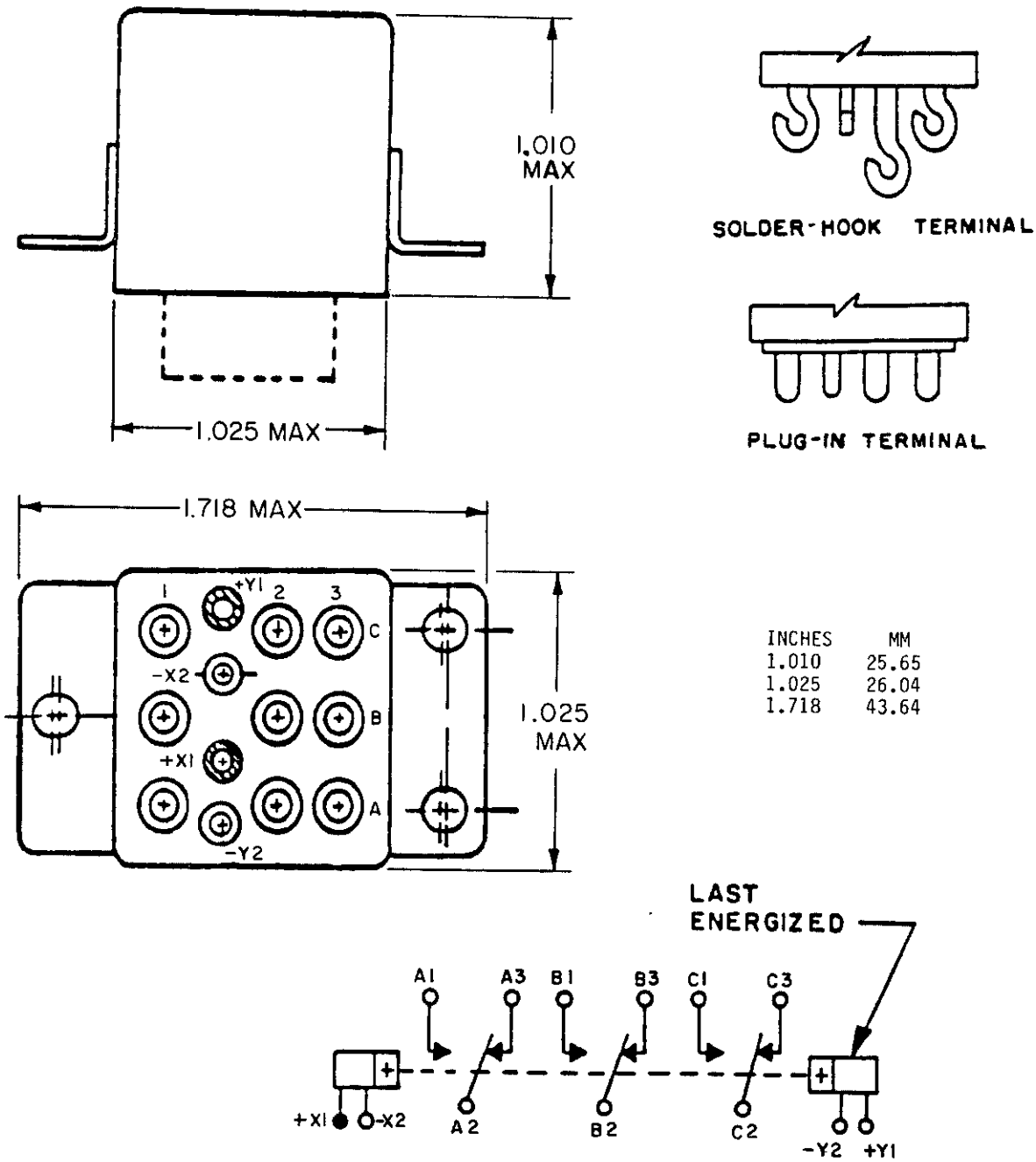

INCHES	MM
1.010	25.65
1.025	26.04
1.718	43.64

FIGURE 306-8. Relay, EM, latch, 3PDT, 25 amperes (MS27742).

Downloaded from http://www.everyspec.com

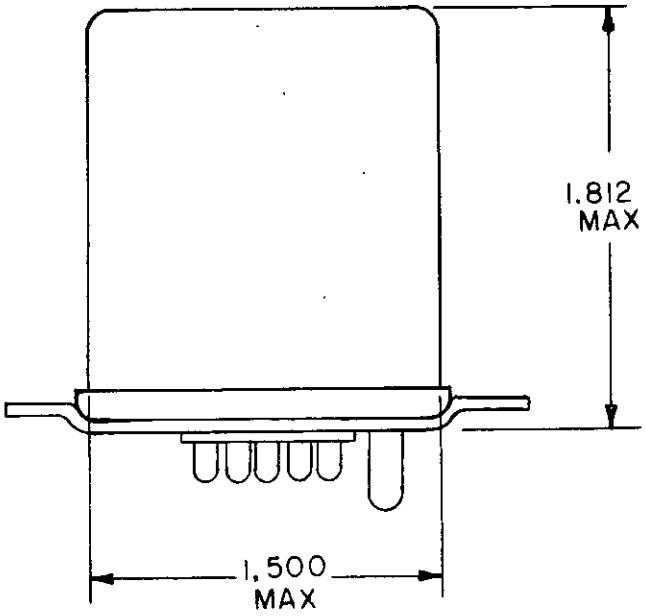

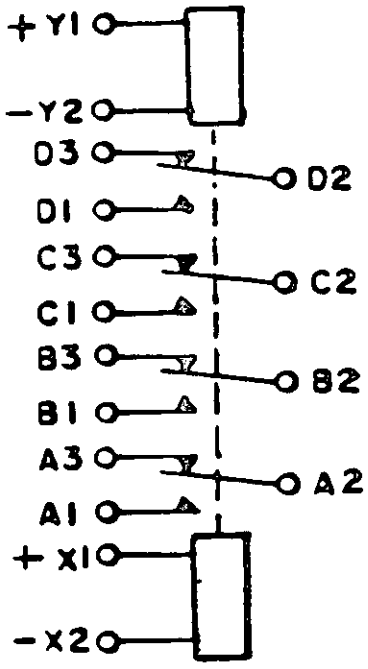

CIRCUIT DIAGRAM

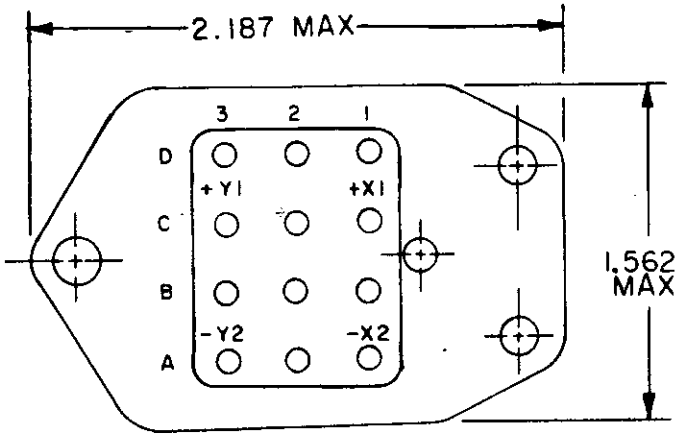

INCHES	MM
1.500	38.10
1.562	39.67
1.812	46.02
2.187	55.55

To close No. 1 contacts energize X1 and X2
To close No. 3 contacts energize Y1 and Y2

FIGURE 306-9. Relay, EM, latch, 4PDT, 10 amperes (MS25461).

Downloaded from http://www.everyspec.com

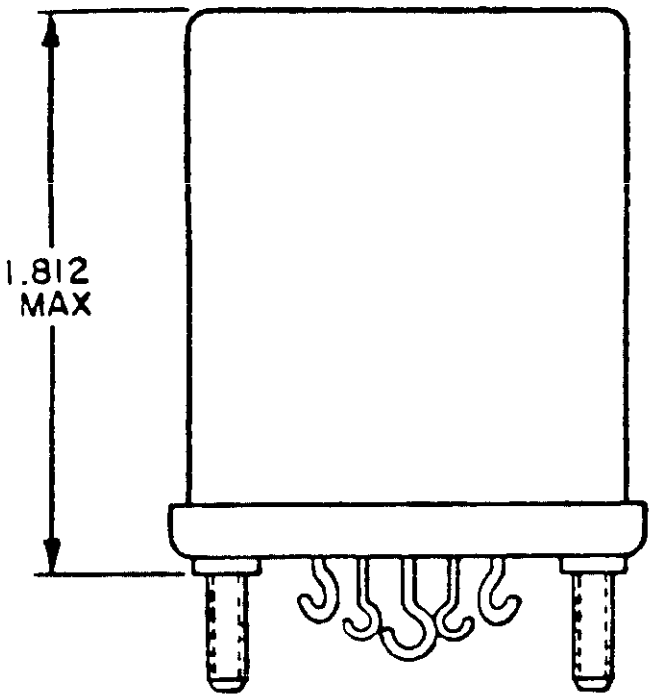

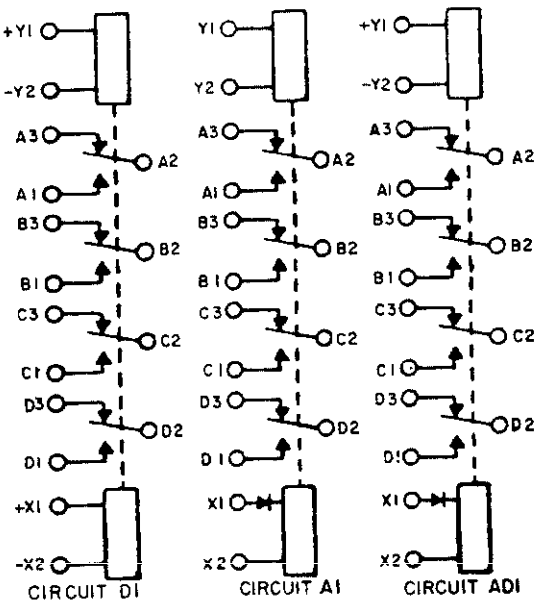

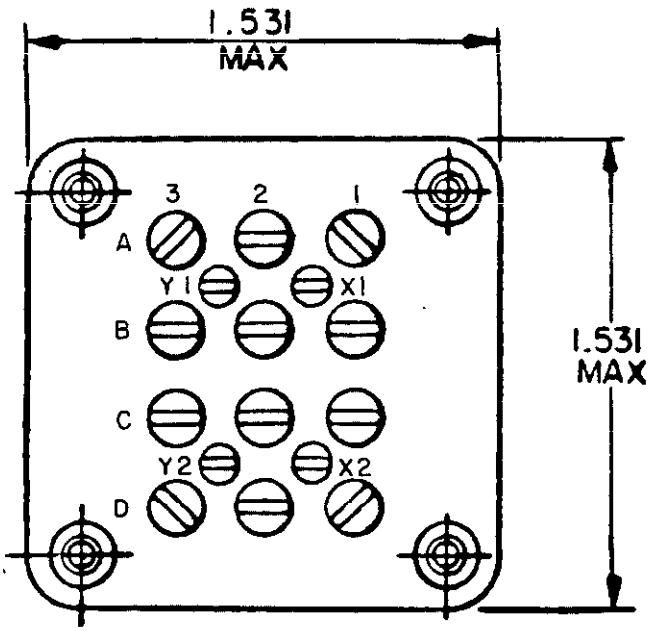

INCHES	MM
1.531	38.89
1.812	46.02

To close No. 1 contacts energize X1 and X2
To close No. 3 contacts energize Y1 and Y2

FIGURE 306-10. Relay, EM, latch, 4PDT, 10 amperes (MS25468).

Downloaded from http://www.everyspec.com

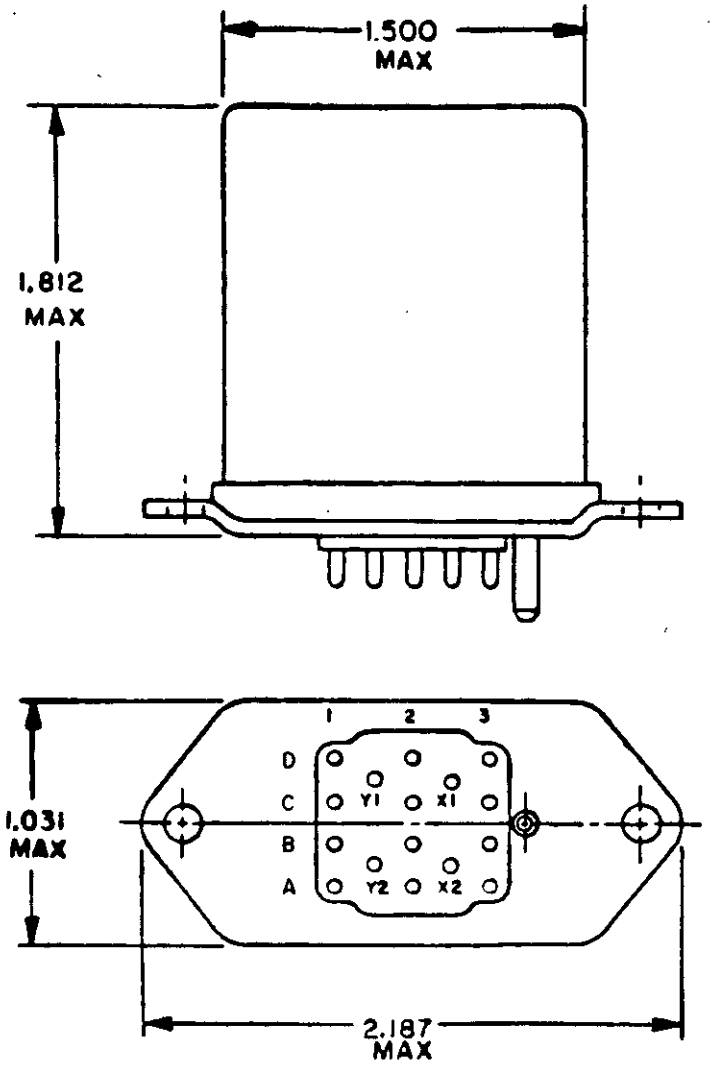

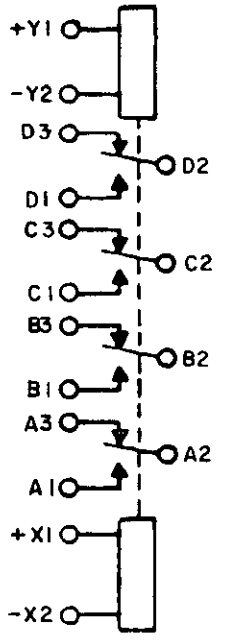

CIRCUIT DIAGRAM

To close No. 1 contacts energize X1 and X2
To close No. 3 contacts energize Y1 and Y2

INCHES	MM
1.031	26.19
1.500	38.10
1.812	46.02
2.187	55.55

FIGURE 306-11. Relay, EM, latch, 4PDT, 5 amperes (MS25459).

Downloaded from http://www.everyspec.com

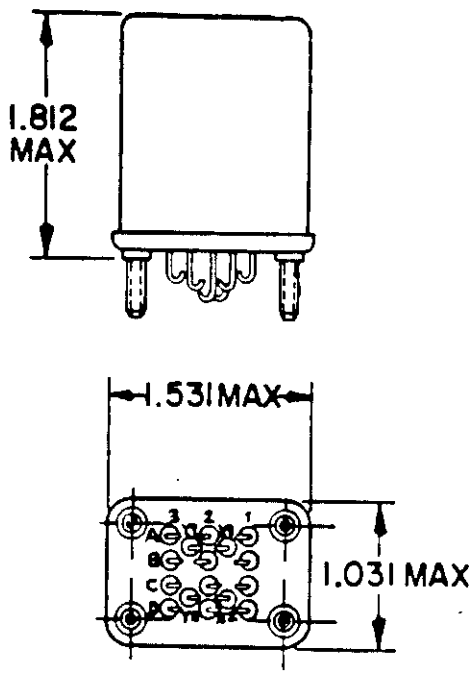

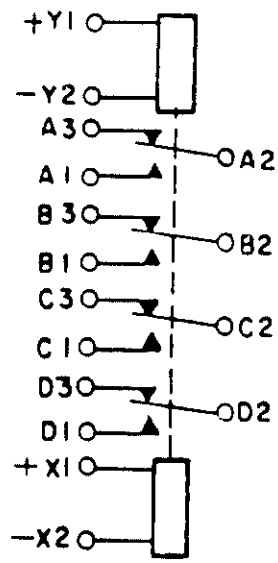

CIRCUIT DIAGRAM

TO CLOSE NO. 1 CONTACTS ENERGIZE X1 AND X2
TO CLOSE NO. 3 CONTACTS ENERGIZE Y1 AND Y2

INCHES	MM
1.031	26.19
1.531	38.89
1.812	46.02

FIGURE 306-12. Relay, EM, latch, 4PDT, 5 amperes (MS25467).

Downloaded from http://www.everyspec.com

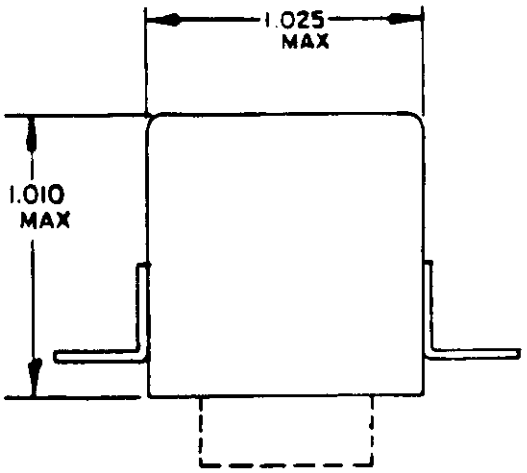

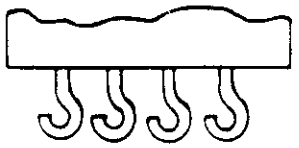

SOLDER-HOOK TERMINAL

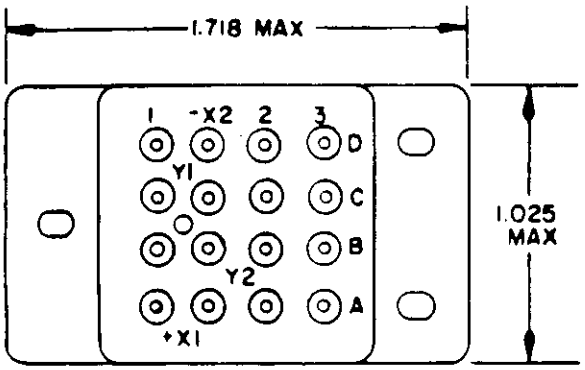

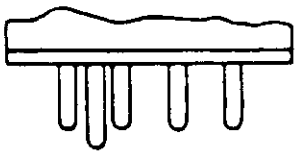

PLUG IN TERMINAL

INCHES	MM
1.010	25.65
1.025	26.04
1.718	43.64

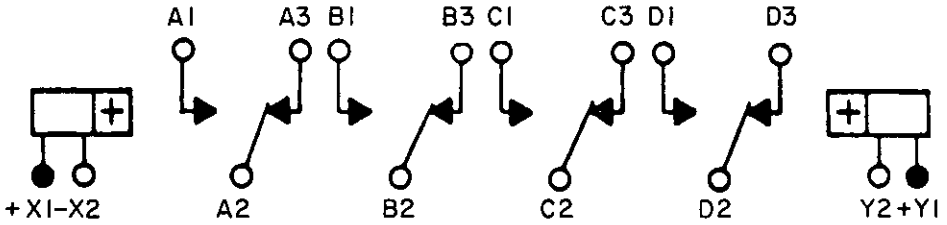

CIRCUIT DIAGRAM-1-2-3-4

TO CLOSE NO. 1 CONTACTS (OPERATE)
ENERGIZE X1 AND X2
TO CLOSE NO. 3 CONTACTS (RESET)
ENERGIZE Y1 AND Y2

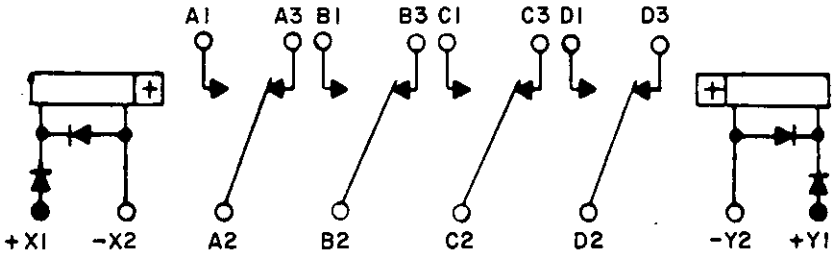

CIRCUIT DIAGRAM-5

WHEN ENERGIZED WITH POLARITY INDICATED CONTACTS WILL TRANSFER

FIGURE 306-13. Relay, EM, latch, 4PDT, 10 amperes (MS27745).

Downloaded from http://www.everyspec.com

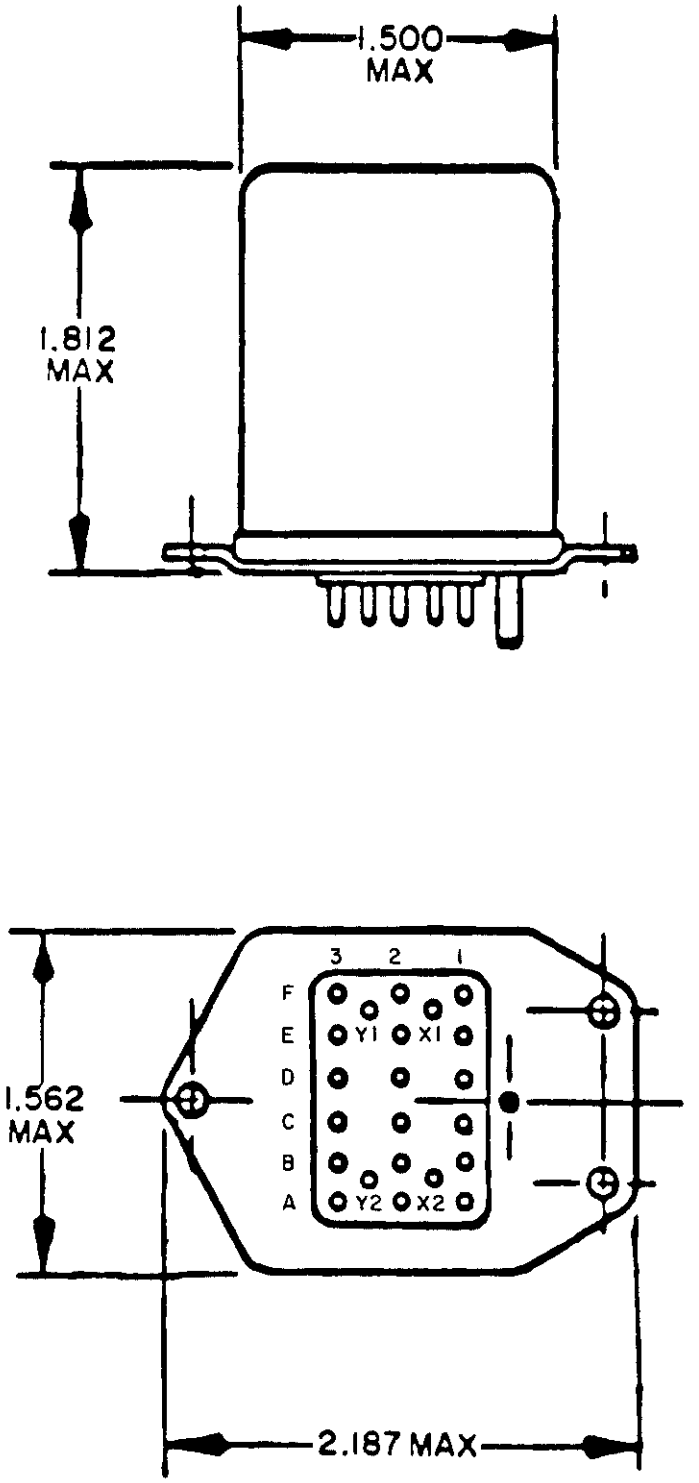

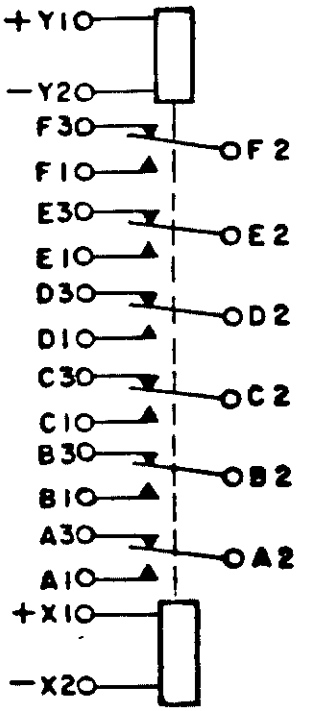

CIRCUIT DIAGRAM

INCHES	MM
1.500	38.10
1.562	39.67
1.812	46.02
2.187	55.55

To close No. 1 contacts energize X1 and X2
To close No. 3 contacts energize Y1 and Y2

FIGURE 306-14. Relay, EM, latch, 6PDT, 5 amperes (MS25463).

Downloaded from http://www.everyspec.com

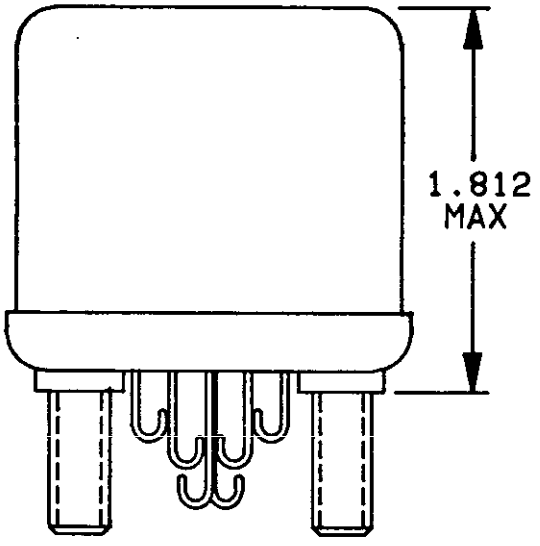

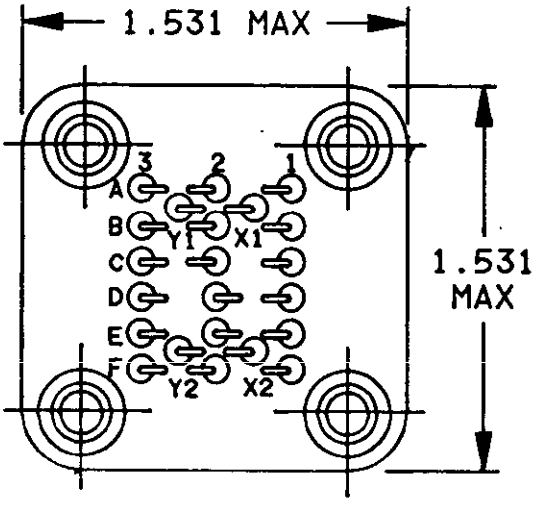

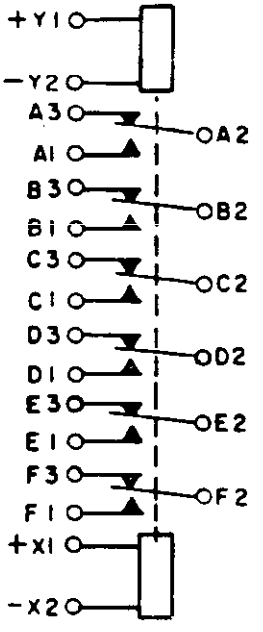

CIRCUIT DIAGRAM

INCHES	MM
1.531	38.89
1.812	46.02

To close No. 1 contacts energize X1 and X2
To close No. 3 contacts energize Y1 and Y2

FIGURE 306-15. Relay, EM, latch, 6PDT, 5 amperes (MS25469).

Downloaded from http://www.everyspec.com

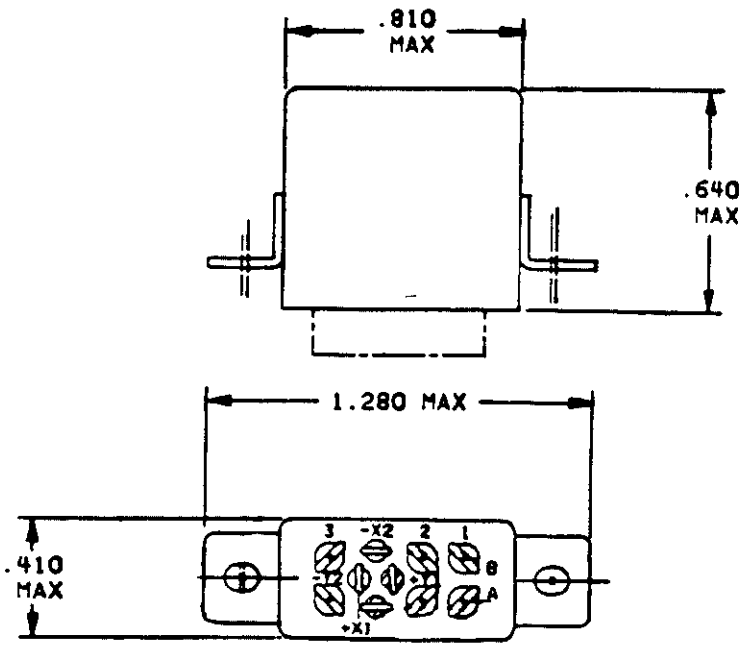

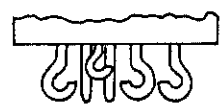

SOLDER HOOK FOR-001

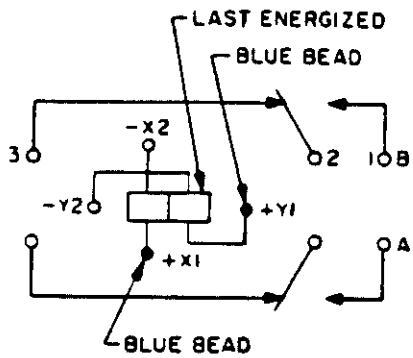

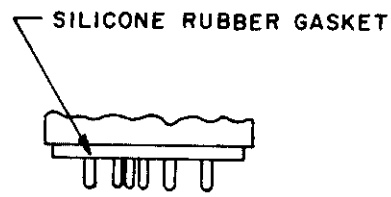

SOCKET PIN FOR-002

INCHES	MM
.410	10.41
.640	16.26
.810	20.57
1.280	32.51

FIGURE 306-16. Relay, EM, latch, low level to 5 amperes, DPDT (MIL-R-6106/38).

Downloaded from http://www.everyspec.com

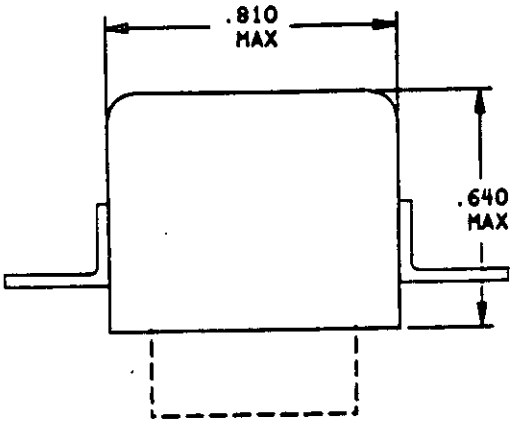

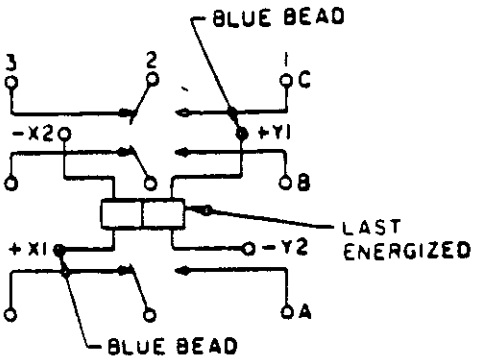

CIRCUIT DIAGRAM

TO CLOSE NO. 1 CONTACTS (OPERATE)
ENERGIZE X1 AND X2

TO CLOSE NO. 3 CONTACTS (RESET)
ENERGIZE Y1 AND Y2

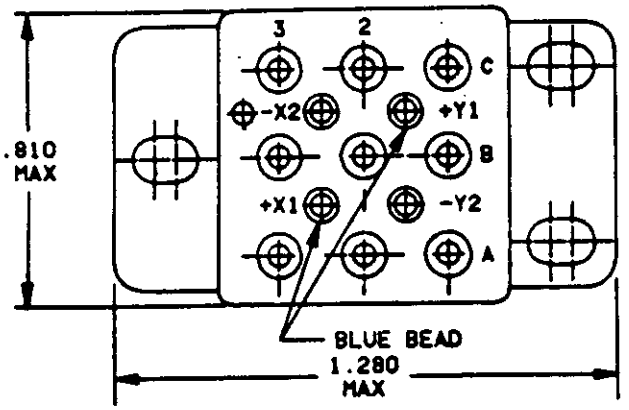

SOLDER HOOK FOR -001

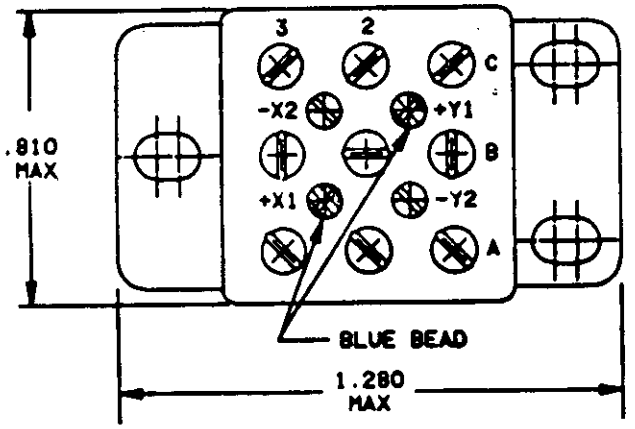

-001 SOLDER HOOK

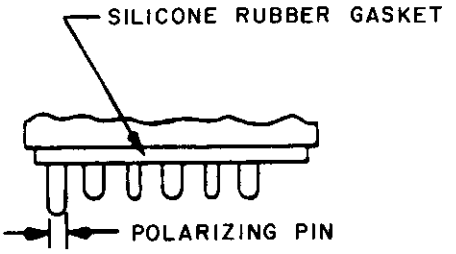

SOCKET PIN FOR -002

SOLDER PIN FOR -003

INCHES	MM
.640	16.26
.810	20.57
1.280	32.51

FIGURE 306-17. Relay, EM, latch, low level to 10 amperes, 3PDT, (MIL-R-6106/40).

Downloaded from http://www.everyspec.com

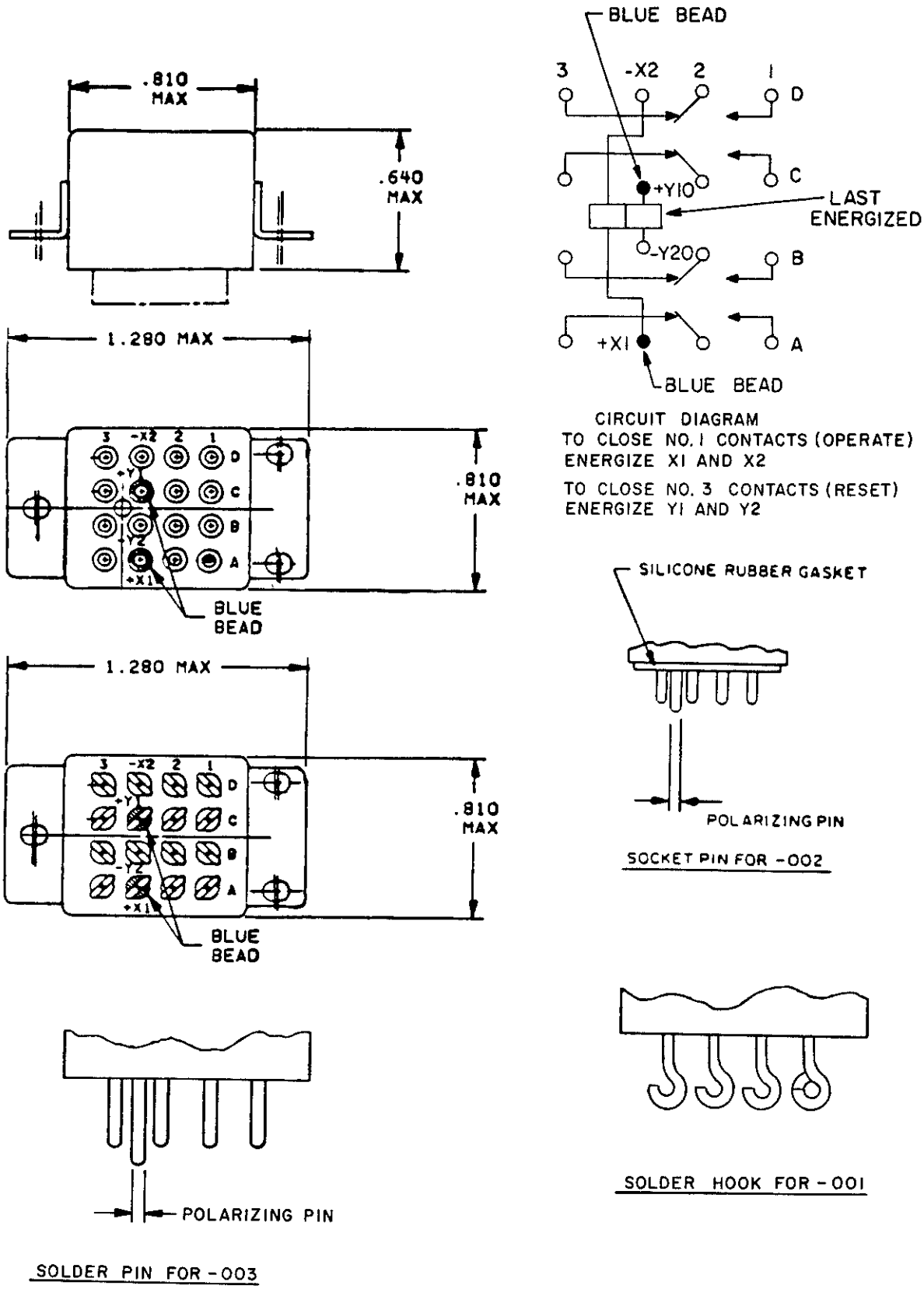

FIGURE 306-18. Relay, EM, latch, low level to 5 amperes, 4PDT, (MIL-R-6106/39).

Downloaded from http://www.everyspec.com

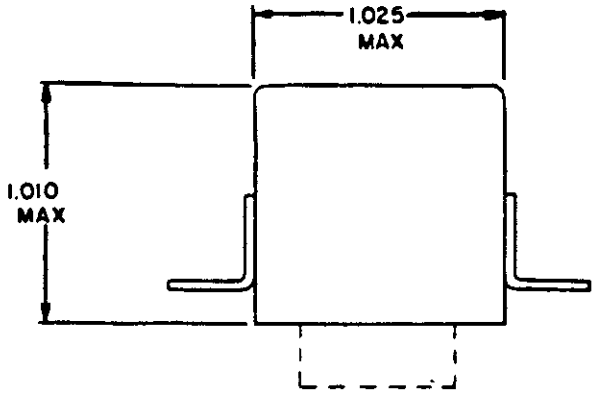

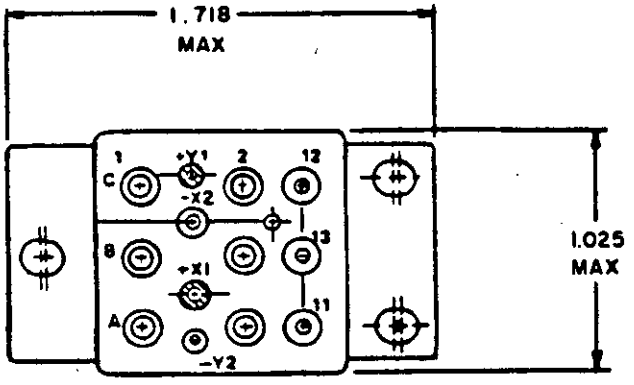

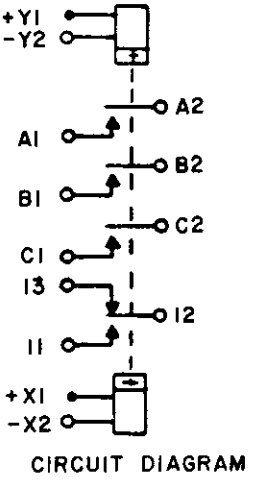

CIRCUIT DIAGRAM

INCHES	MM
1.010	25.65
1.025	26.04
1.718	43.64

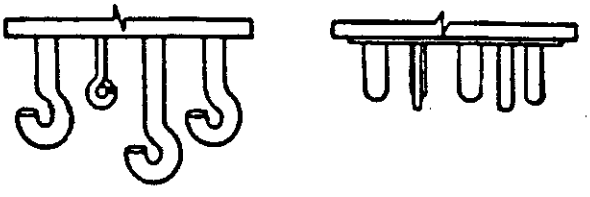

FIGURE 306-19. Relay, EM, latch, 25 ampere, 3PNO with 2 ampere SPDT auxiliary contacts (MIL-R-6106/12).

Downloaded from http://www.everyspec.com

SUBSECTION 307

RELAYS, ELECTROMAGNETIC (EM), LATCHING, AC OPERATED

(Applicable specification: MIL-R-6106)

SCOPE: This subsection covers relays with coils ac voltage rated. Latching relays maintain their contacts in the last position assumed without the need of maintaining coil energization.

SUBSECTION 307

RELAYS, ELECTROMAGNETIC (EM), LATCHING, AC OPERATED

(Applicable specification: MIL-R-6106)

Duty cycle: Continuous
Enclosure: Hermetically sealed
Latch and reset rated coil voltage: 115 V 400 Hz
Operating temperature range: B (see table I)
Shock: 3 (see table II)
Vibration: 4 (see table III)

TABLE 307.I. Relays, EM, latching, ac operated, part numbers and characteristics.

Part number	Figure number	System voltage and frequency-contact current in amperes																			
		400 Hz												60 Hz							
		28 V dc				115 V 1 phase				115/200 V 3 phase				115 V 1-phase				115/200 V 3 phase			
		Resistive	Inductive	Motor	Lamp	Resistive	Inductive	Motor	Lamp	Resistive	Inductive	Motor	Lamp	Resistive	Inductive	Motor	Lamp	Resistive	Inductive	Motor	Lamp
DPDT CONTACTS - 2 FORM C																					
MS25457-A1	306-2	10	6	4	2	10	10	4	2	10	10	4	2	6	4	3	1.5	6	4	3	1.5
MS25466-A1	306-3	10	6	4	2	10	10	4	2	10	10	4	2	6	4	3	1.5	6	4	3	1.5
MS25455-A1	306-4	5	3	1.5	.8	5	3	1.5	.8	---	---	---	---	4	2	1	.6	---	---	---	---
MS25465-A1	306-5	5	3	1.5	.8	5	3	1.5	.8	---	---	---	---	4	2	1	.6	"	"	"	"
MS27744																					
-3 1/	306-6	10	8	4	2	10	8	4	2	10	8	4	2	---	---	---	---	"	"	"	"
-4 1/	306-6	10	8	4	2	10	8	4	2	10	8	4	2	---	---	---	---	"	"	"	"
4PDT CONTACTS - 4 FORM C																					
MS25461-A1	306-9	10	6	4	2	10	10	4	2	10	10	4	2	6	4	3	1.5	6	4	3	1.5
MS25468-A1	306-10	10	6	4	2	10	10	4	2	10	10	4	2	6	4	3	1.5	6	4	3	1.5
MS25459-A1	306-11	5	3	1.5	.8	5	3	1.5	.8	---	---	---	---	4	2	1	.6	---	---	---	---
MS25467-A1	306-12	5	3	1.5	.8	5	3	1.5	.8	---	---	---	---	4	2	1	.6	"	"	"	"
MS27745																					
-3 1/	306-13	10	8	4	2	10	8	4	2	10	8	4	2	---	---	---	---	"	"	"	"
-4 1/	306-13	10	8	4	2	10	8	4	2	10	8	4	2	---	---	---	---	"	"	"	"
6PDT CONTACTS - 6 FORM C																					
MS25463-A1	306-14	5	3	1.5	.8	5	3	1.5	.8	---	---	---	---	4	2	1	.6	---	---	---	---
MS25469-A1	306-15	5	3	1.5	.8	5	3	1.5	.8	---	---	---	---	4	2	1	.6	---	---	---	---

1/ For shock, vibration and operating temperature range, see spec.

Downloaded from http://www.everyspec.com

Downloaded from http://www.everyspec.com

SUBSECTION 308

RELAYS, ELECTROMAGNETIC (EM), LATCHING, DC/AC OPERATED

(Applicable specification: MIL-R-6106)

SCOPE: This subsection covers relays with one coil dc voltage rated and the other coil ac voltage rated. Latching relays maintain their contacts in the last position assumed without the need of maintaining coil energization.

SUBSECTION 308

RELAYS, ELECTROMAGNETIC (EM), LATCHING, DC/AC OPERATED

(Applicable specification: MIL-R-6106)

Duty cycle: Continuous
Enclosure: Hermetically sealed
Rated coil voltage: 28 V dc, 115 V 400 Hz
Operating temperature range: B (see table I)
Shock: 3 (see table II)
Vibration: 4 (see table III)

TABLE 308.I. Relays, EM, latching, dc/ac operated, part number and characteristics.

Part number	Figure number	Latching voltage dc	Latching voltage ac 400 Hz	System voltage and frequency - contact current in amperes																			
				400 Hz												60 Hz							
				28 V dc				115 V 1 phase				115/200 V 3 phase				115 V 1 phase				115/200 V 3 phase			
				Resistive	Inductive	Motor	Lamp	Resistive	Inductive	Motor	Lamp	Resistive	Inductive	Motor	Lamp	Resistive	Inductive	Motor	Lamp	Resistive	Inductive	Motor	Lamp
4PDT CONTACTS - 4 FORM C																							
MS25468-AD1	306-10	28	115	10	6	4	2	10	10	4	2	10	10	4	2	6	4	3	1.5	6	4	3	1.5

Downloaded from http://www.everyspec.com

Downloaded from http://www.everyspec.com

SECTION 400

RELAYS, SOLID STATE, FOR ELECTRONIC AND COMMUNICATION TYPE EQUIPMENT

Section

401 Relays, solid state, for electronic and communication type equipment, dc input.

Downloaded from http://www.everyspec.com

SUBSECTION 401

RELAYS, SOLID STATE, FOR ELECTRONIC AND COMMUNICATION TYPE EQUIPMENT

SCOPE: This section covers solid state relays in which the specified input and output switching functions are performed by semiconductor and passive circuit devices.

Downloaded from http://www.everyspec.com

SECTION 401

RELAYS, SOLID STATE, FOR ELECTRONIC AND COMMUNICATION TYPE EQUIPMENT, DC INPUT

(Applicable specification: MIL-R-28750)

TABLE 401.I Relays, solid state, for electronic and communications type equipment, dc input, part numbers and characteristics.

Part number 1/	Figure number	Operating temperature range (see table I)	Shock (see table II)	Vibration (see table III)	Input data	Output data	Terminals
M28750/5							
-001Z	401-1	J	1	6	4.0 to 7.0 V dc	3/	WL
M28750/6							
-001Z	"	"	"	"	"	"	WL
M28750/7							
-001Z	"	"	"	"	"	"	WL
M28750/9							
-001Z	401-2	-55 to +110°C	2/	"	3.8 to 32.0 V dc	"	L
M28750/10							
-001Z	401-3	"	1	"	4.0 to 32.0 V dc	"	L
-002Z	401-3	"	1	"	4.0 to 32.0 V dc	"	L

1/ Complete part number shall include a "W", "Y" or "X" to indicate applicable screening level.

2/ MIL-STD-202, method 213, test condition I (100 G).

3/ For rated output current versus input voltage and temperature see applicable specification.

Downloaded from http://www.everyspec.com

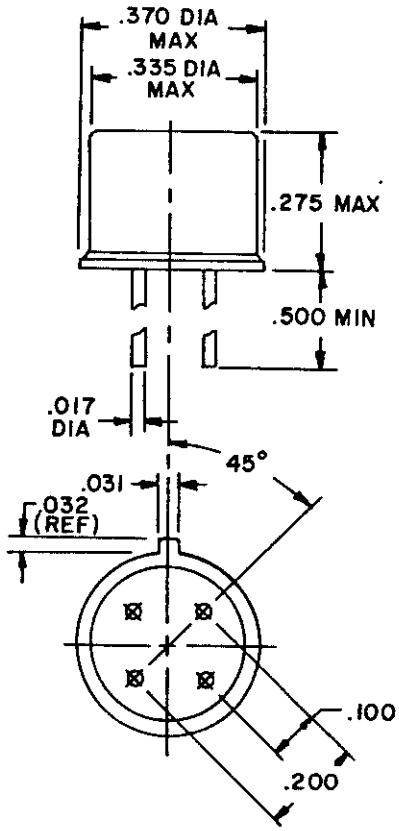

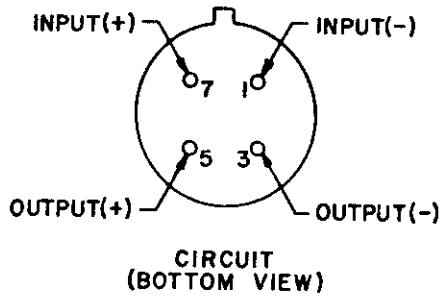

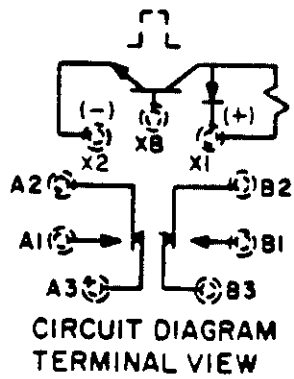

FIGURE 401-1. Relay, solid state, signal switching (MIL-R-28750/5 thru MIL-R-28750/7).

Downloaded from http://www.everyspec.com

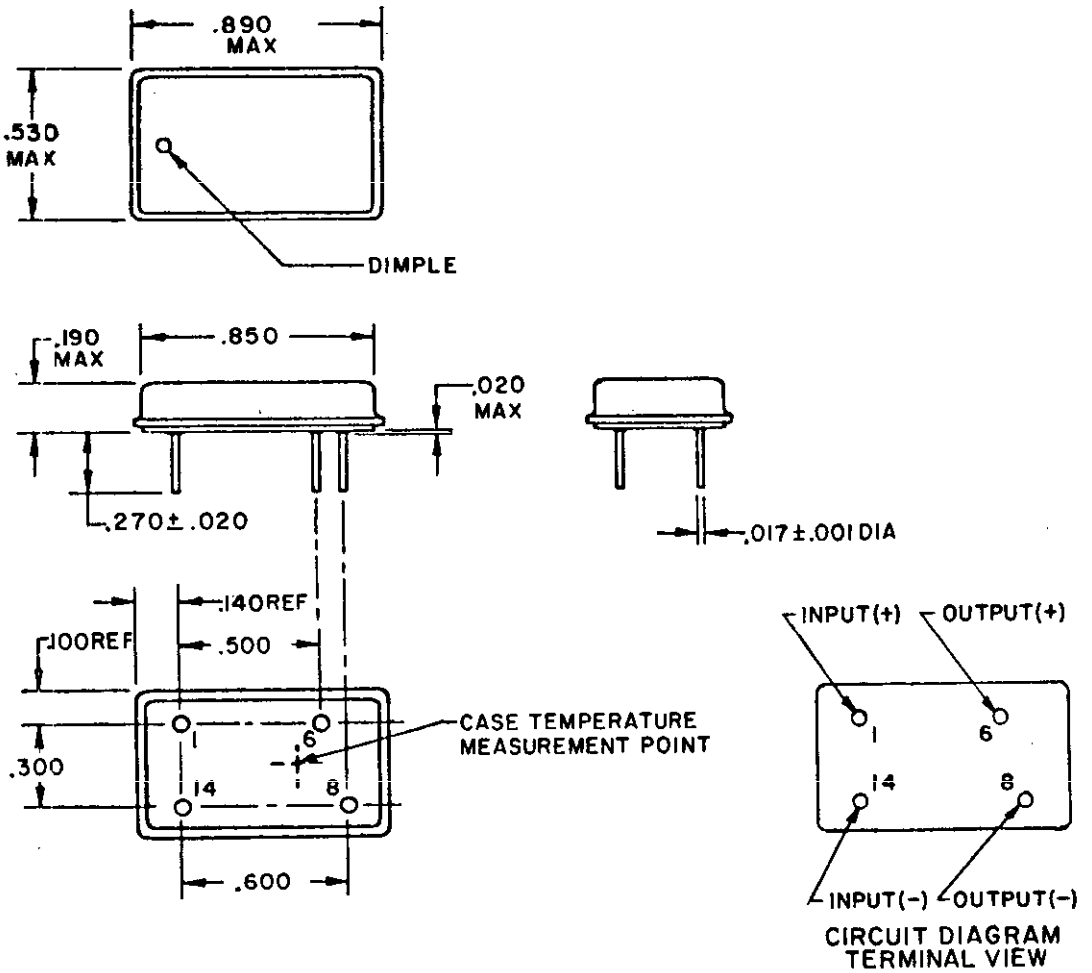

FIGURE 401-2. Relay, solid state, power switching (MIL-R-28750/9).

Downloaded from http://www.everyspec.com

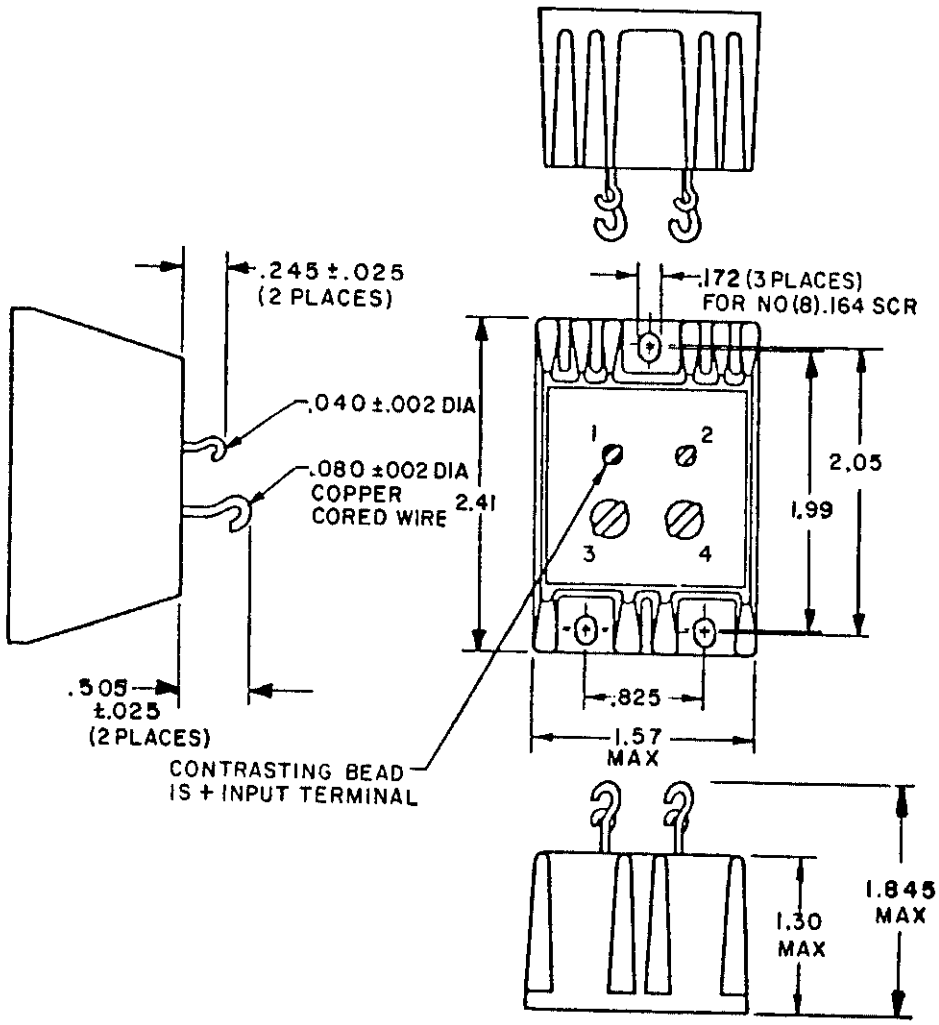

FIGURE 401-3. Relay, solid state, sealed, power switching (MIL-R-28750/10).

Downloaded from http://www.everyspec.com

SECTION 500

RELAYS, REED

Section

501 Relays, dry reed

Downloaded from http://www.everyspec.com

SECTION 501

RELAYS, DRY REED

SCOPE: This section covers relays consisting of one or more reed switch capsules and one or more coils.

NOTE: As of this date, no selected standard dry reed relays have been established.

Downloaded from http://www.everyspec.com

SECTION 600

RELAYS, TIME DELAY

(Applicable specification: MIL-R-83726)

Section

601 Relays, time delay, hybrid

602 Relays, time delay, solid state

Downloaded from http://www.everyspec.com

SECTION 601

RELAYS, TIME DELAY,

HYBRID

(Applicable specification: MIL-R-83726)

SCOPE: This section covers time delay relays in which the specified time delay interval is obtained through the use of hybrid circuitry.

SECTION 601

RELAYS, TIME DELAY

(Applicable specification: MIL-R-83726)

Duty cycle: Continuous

TABLE 601.I. Relays, time delay, hybrid, part numbers and characteristics.

Rated input dc voltage	Part number M83726/	Figure number	Shock (see table II)	Vibration (see table III)	Time delay (seconds) ±10%		Contact data											Recycle time in milli-seconds max	Terminal style (see table IV)
							28 V dc				115/200 V 1 & 3 phase 400 Hz				115 V 1-phase 60 to 400 Hz				
					On operate	On release type IIA	Resistive	Inductive	Motor	Lamp	Resistive	Inductive	Motor	Lamp	Resistive	Inductive	Lamp		
18 to 31	7-0600	601-1	1	7	.060		2	1	---	.1	.3	.3	---	.1	.3	.3	.1	2/ 50	L
"	-1000	"	"	"	.100		"	"	"	"	"	"	"	"	"	"	"	"	"
"	-5000	"	"	"	.500	1/	"	"	"	"	"	"	"	"	"	"	"	"	"
"	-7500	"	"	"	.750		"	"	"	"	"	"	"	"	"	"	"	"	"
"	-1001	"	"	"	1		"	"	"	"	"	"	"	"	"	"	"	"	"
"	-2001	"	"	"	2		"	"	"	"	"	"	"	"	"	"	"	"	"
"	-3001	"	"	"	3		"	"	"	"	"	"	"	"	"	"	"	"	"
"	-5001	"	"	"	5		"	"	"	"	"	"	"	"	"	"	"	"	"
"	-7001	"	"	"	7		"	"	"	"	"	"	"	"	"	"	"	"	"
"	-1002	"	"	"	10		"	"	"	"	"	"	"	"	"	"	"	"	"
"	-1202	"	"	"	12		"	"	"	"	"	"	"	"	"	"	"	"	"
"	-2002	"	"	"	20		"	"	"	"	"	"	"	"	"	"	"	"	"
"	-3002	"	"	"	30		"	"	"	"	"	"	"	"	"	"	"	"	"
"	-4502	"	"	"	45		"	"	"	"	"	"	"	"	"	"	"	"	"
"	-6002	"	"	"	60		"	"	"	"	"	"	"	"	"	"	"	"	"
"	-1203	"	"	"	120		"	"	"	"	"	"	"	"	"	"	"	"	"
"	-1803	"	"	"	180		"	"	"	"	"	"	"	"	"	"	"	"	"
"	-3003	"	"	"	300		"	"	"	"	"	"	"	"	"	"	"	"	"
"	8-1001	601-2	"	"		1	"	"	"	"	"	"	"	"	"	"	"	2/ 25	"
"	-2001	"	"	"		2	"	"	"	"	"	"	"	"	"	"	"	"	"
"	-3001	"	"	"		3	"	"	"	"	"	"	"	"	"	"	"	"	"
"	-4001	"	"	"		4	"	"	"	"	"	"	"	"	"	"	"	"	"
"	-8001	"	"	"		8	"	"	"	"	"	"	"	"	"	"	"	"	"
"	-1002	"	"	"		10	"	"	"	"	"	"	"	"	"	"	"	"	"
"	-1402	"	"	"		14	"	"	"	"	"	"	"	"	"	"	"	"	"
"	-3002	"	"	"		30	"	"	"	"	"	"	"	"	"	"	"	"	"
"	-4502	"	"	"		45	"	"	"	"	"	"	"	"	"	"	"	"	"
"	-6002	"	"	"		60	"	"	"	"	"	"	"	"	"	"	"	"	"
"	-1203	"	"	"		120	"	"	"	"	"	"	"	"	"	"	"	"	"
"	-1803	"	"	"		180	"	"	"	"	"	"	"	"	"	"	"	"	"
"	-3003	"	"	"		300	"	"	"	"	"	"	"	"	"	"	"	"	"

See footnotes at end of table.

Downloaded from http://www.everyspec.com

TABLE 601.I. Relays, time delay, hybrid, part numbers and characteristics - Continued.

Rated input dc voltage	Part number M83726/	Figure number	Shock (see table II)	Vibration (see table III)	Time delay (seconds) ±10%		Contact data											Recycle time in milli-seconds max	Terminal style (see table IV)
							28 V dc				115/200 V 1 & 3 phase 400 Hz				115 V 1-phase 60 to 400 Hz				
					On operate	On release type IIA	Resis-tive	Induc-tive	Motor	Lamp	Resis-tive	Induc-tive	Motor	Lamp	Resis-tive	Induc-tive	Lamp		
20 to 30	12-1001	601-3	3	7	---	1	10	8	4	2	10	8	4	2	---	---	---	50	L
"	-2001	"	"	"	"	2	"	"	"	"	"	"	"	"	"	"	"	"	"
"	-3001	"	"	"	"	3	"	"	"	"	"	"	"	"	"	"	"	"	"
"	-4001	"	"	"	"	4	"	"	"	"	"	"	"	"	"	"	"	"	"
"	-8001	"	"	"	"	8	"	"	"	"	"	"	"	"	"	"	"	"	"
"	-1002	"	"	"	"	10	"	"	"	"	"	"	"	"	"	"	"	"	"
"	-1402	"	"	"	"	14	"	"	"	"	"	"	"	"	"	"	"	"	"
"	-3002	"	"	"	"	30	"	"	"	"	"	"	"	"	"	"	"	"	"
"	-4502	"	"	"	"	45	"	"	"	"	"	"	"	"	"	"	"	"	"
"	-6002	"	"	"	"	60	"	"	"	"	"	"	"	"	"	"	"	"	"
"	-1203	"	"	"	"	120	"	"	"	"	"	"	"	"	"	"	"	"	"
"	-1803	"	"	"	"	180	"	"	"	"	"	"	"	"	"	"	"	"	"
"	-3003	"	"	"	"	300	"	"	"	"	"	"	"	"	"	"	"	"	"
"	14-1000	601-4	"	"	.100		"	"	"	"	"	"	"	"	"	"	"	"	"
"	-5000	"	"	"	.500	1/	"	"	"	"	"	"	"	"	"	"	"	"	"
"	-7500	"	"	"	.750		"	"	"	"	"	"	"	"	"	"	"	"	"
"	-1001	"	"	"	1	---	"	"	"	"	"	"	"	"	"	"	"	"	"
"	-2001	"	"	"	2	"	"	"	"	"	"	"	"	"	"	"	"	"	"
"	-3001	"	"	"	3	"	"	"	"	"	"	"	"	"	"	"	"	"	"
"	-5001	"	"	"	5	"	"	"	"	"	"	"	"	"	"	"	"	"	"
"	-7001	"	"	"	7	"	"	"	"	"	"	"	"	"	"	"	"	"	"
"	-1002	"	"	"	10	"	"	"	"	"	"	"	"	"	"	"	"	"	"
"	-1202	"	"	"	12	"	"	"	"	"	"	"	"	"	"	"	"	"	"
"	-2002	"	"	"	20	"	"	"	"	"	"	"	"	"	"	"	"	"	"
"	-3002	"	"	"	30	"	"	"	"	"	"	"	"	"	"	"	"	"	"
"	-4502	"	"	"	45	"	"	"	"	"	"	"	"	"	"	"	"	"	"
"	-6002	"	"	"	60	"	"	"	"	"	"	"	"	"	"	"	"	"	"
"	-1203	"	"	"	120	"	"	"	"	"	"	"	"	"	"	"	"	"	"
"	-1803	"	"	"	180	"	"	"	"	"	"	"	"	"	"	"	"	"	"
"	-3003	"	"	"	300	"	"	"	"	"	"	"	"	"	"	"	"	"	"
"	23-1001	601-5	1	"	---	1	"	"	"	"	"	"	"	"	"	"	"	"	"
"	-2001	"	"	"	"	2	"	"	"	"	"	"	"	"	"	"	"	"	"
"	-3001	"	"	"	"	3	"	"	"	"	"	"	"	"	"	"	"	"	"
"	-4001	"	"	"	"	4	"	"	"	"	"	"	"	"	"	"	"	"	"
"	-8001	"	"	"	"	8	"	"	"	"	"	"	"	"	"	"	"	"	"
"	-1002	"	"	"	"	10	"	"	"	"	"	"	"	"	"	"	"	"	"
"	-1402	"	"	"	"	14	"	"	"	"	"	"	"	"	"	"	"	100	"
"	-3002	"	"	"	"	30	"	"	"	"	"	"	"	"	"	"	"	"	"
"	-4502	"	"	"	"	45	"	"	"	"	"	"	"	"	"	"	"	"	"
"	-6002	"	"	"	"	60	"	"	"	"	"	"	"	"	"	"	"	"	"

See footnotes at end of table.

Downloaded from http://www.everyspec.com

TABLE 601.I. Relays, time delay, hybrid, part numbers and characteristics - Continued.

Rated input dc voltage	Part number M83726/	Figure number	Shock (see table II)	Vibration (see table III)	Time delay (seconds) ±10%		Contact data											Recycle time in milli-seconds max	Terminal style (see table IV)
							28 V dc				115/200 V 1 & 3 phase 400 Hz				115 V 1-phase 60 to 400 Hz				
					On operate	On release type IIA	Resistive	Inductive	Motor	Lamp	Resistive	Inductive	Motor	Lamp	Resistive	Inductive	Lamp		
20 to 30	28-1001X	601-6	3	9	.100		10	8	4	2	10	8	4	2	---	---	---	50	S or P
"	3/ -5000X	"	"	"	.500	1/	"	"	"	"	"	"	"	"	"	"	"	"	"
"	-7500X	"	"	"	.750		"	"	"	"	"	"	"	"	"	"	"	"	"
"	-1001X	"	"	"	1		"	"	"	"	"	"	"	"	"	"	"	"	"
"	-2001X	"	"	"	2		"	"	"	"	"	"	"	"	"	"	"	"	"
"	-3001X	"	"	"	3		"	"	"	"	"	"	"	"	"	"	"	"	"
"	-5001X	"	"	"	5		"	"	"	"	"	"	"	"	"	"	"	"	"
"	-7001X	"	"	"	7		"	"	"	"	"	"	"	"	"	"	"	"	"
"	-1002X	"	"	"	10		"	"	"	"	"	"	"	"	"	"	"	"	"
"	-1202X	"	"	"	12		"	"	"	"	"	"	"	"	"	"	"	"	"
"	-1502X	"	"	"	14		"	"	"	"	"	"	"	"	"	"	"	"	"
"	-2002X	"	"	"	20		"	"	"	"	"	"	"	"	"	"	"	"	"
"	-3002X	"	"	"	30		"	"	"	"	"	"	"	"	"	"	"	"	"
"	-4502X	"	"	"	45		"	"	"	"	"	"	"	"	"	"	"	"	"
"	-6002X	"	"	"	60		"	"	"	"	"	"	"	"	"	"	"	"	"
"	-1203X	"	"	"	120		"	"	"	"	"	"	"	"	"	"	"	"	"
"	-1803X	"	"	"	180		"	"	"	"	"	"	"	"	"	"	"	"	"
"	-3003X	"	"	"	300		"	"	"	"	"	"	"	"	"	"	"	"	"
						Type IIA													
"	29-1001X	601-7	"	"		1	"	"	"	"	"	"	"	"	"	"	"	"	"
"	3/ -2001X	"	"	"		2	"	"	"	"	"	"	"	"	"	"	"	"	"
"	-3001X	"	"	"		3	"	"	"	"	"	"	"	"	"	"	"	"	"
"	-4001X	"	"	"		4	"	"	"	"	"	"	"	"	"	"	"	"	"
"	-8001X	"	"	"		8	"	"	"	"	"	"	"	"	"	"	"	"	"
"	-1002X	"	"	"		10	"	"	"	"	"	"	"	"	"	"	"	"	"
"	-1402X	"	"	"		14	"	"	"	"	"	"	"	"	"	"	"	"	"
"	-3002X	"	"	"		30	"	"	"	"	"	"	"	"	"	"	"	"	"
"	-4502X	"	"	"		45	"	"	"	"	"	"	"	"	"	"	"	"	"
"	-6002X	"	"	"		60	"	"	"	"	"	"	"	"	"	"	"	"	"
"	-1203X	"	"	"		120	"	"	"	"	"	"	"	"	"	"	"	"	"
"	-1803X	"	"	"		180	"	"	"	"	"	"	"	"	"	"	"	"	"
"	-3003X	"	"	"		300	"	"	"	"	"	"	"	"	"	"	"	"	"
"	30-1001X	601-8	"	"	.100		"	"	"	"	"	"	"	"	"	"	"	"	"
"	3/4/-5000X	"	"	"	.500	1/	"	"	"	"	"	"	"	"	"	"	"	"	"
"	-7500X	"	"	"	.750		"	"	"	"	"	"	"	"	"	"	"	"	"
"	-1001X	"	"	"	1		"	"	"	"	"	"	"	"	"	"	"	"	"
"	-2001X	"	"	"	2		"	"	"	"	"	"	"	"	"	"	"	"	"
"	-3001X	"	"	"	3		"	"	"	"	"	"	"	"	"	"	"	"	"
"	-5001X	"	"	"	5		"	"	"	"	"	"	"	"	"	"	"	"	"
"	-7001X	"	"	"	7		"	"	"	"	"	"	"	"	"	"	"	"	"
"	-1002X	"	"	"	10		"	"	"	"	"	"	"	"	"	"	"	"	"
"	-1202X	"	"	"	12		"	"	"	"	"	"	"	"	"	"	"	"	"
"	-1502X	"	"	"	14		"	"	"	"	"	"	"	"	"	"	"	"	"
"	-2002X	"	"	"	20		"	"	"	"	"	"	"	"	"	"	"	"	"
"	-3002X	"	"	"	30		"	"	"	"	"	"	"	"	"	"	"	"	"
"	-4502X	"	"	"	45		"	"	"	"	"	"	"	"	"	"	"	"	"
"	-6002X	"	"	"	60		"	"	"	"	"	"	"	"	"	"	"	"	"
"	-1203X	"	"	"	120		"	"	"	"	"	"	"	"	"	"	"	"	"
"	-1803X	"	"	"	180		"	"	"	"	"	"	"	"	"	"	"	"	"
"	-3003X	"	"	"	300		"	"	"	"	"	"	"	"	"	"	"	"	"

See footnotes at end of table.

Downloaded from http://www.everyspec.com

TABLE 601.I. Relays, time delay, hybrid, part numbers and characteristics - Continued.

Rated input dc voltage	Part number M83726/	Figure number	Shock (see table II)	Vibration (see table III)	Time delay (seconds) ±10%		Contact data											Recycle time in milli-seconds max	Terminal style (see table IV)
							28 V dc				115/200 V 1 & 3 phase 400 Hz				115 V 1-phase 60 to 400 Hz				
					On operate	On release type IIA	Resis-tive	Induc-tive	Motor	Lamp	Resis-tive	Induc-tive	Motor	Lamp	Resis-tive	Induc-tive	Lamp		
20 to 30	31-1001X	601-9	3	9	---	1	10	8	4	2	10	8	4	2	---	---	---	50	S or P
"	3/4/-2001X	"	"	"	"	2	"	"	"	"	"	"	"	"	"	"	"	"	"
"	-3001X	"	"	"	"	3	"	"	"	"	"	"	"	"	"	"	"	"	"
"	-4001X	"	"	"	"	4	"	"	"	"	"	"	"	"	"	"	"	"	"
"	-8001X	"	"	"	"	8	"	"	"	"	"	"	"	"	"	"	"	"	"
"	-1002X	"	"	"	"	10	"	"	"	"	"	"	"	"	"	"	"	"	"
"	-1202X	"	"	"	"	12	"	"	"	"	"	"	"	"	"	"	"	"	"
"	-1402X	"	"	"	"	14	"	"	"	"	"	"	"	"	"	"	"	"	"
"	-3002X	"	"	"	"	30	"	"	"	"	"	"	"	"	"	"	"	"	"
"	-4502X	"	"	"	"	45	"	"	"	"	"	"	"	"	"	"	"	"	"
"	-6002X	"	"	"	"	60	"	"	"	"	"	"	"	"	"	"	"	"	"
"	-1203X	"	"	"	"	120	"	"	"	"	"	"	"	"	"	"	"	"	"
"	-1803X	"	"	"	"	180	"	"	"	"	"	"	"	"	"	"	"	"	"
"	-3003X	"	"	"	"	300	"	"	"	"	"	"	"	"	"	"	"	"	"

1/ Add ±10 milliseconds for any timing less than one second.

2/ See specification.

3/ Complete part number shall consist of a "S" or "P" after the dash number to specify either solder lug or plug-in. Example: M783726/28-1000S or M83726/31-3003P.

4/ Requires external resistor.

Downloaded from http://www.everyspec.com

Downloaded from http://www.everyspec.com

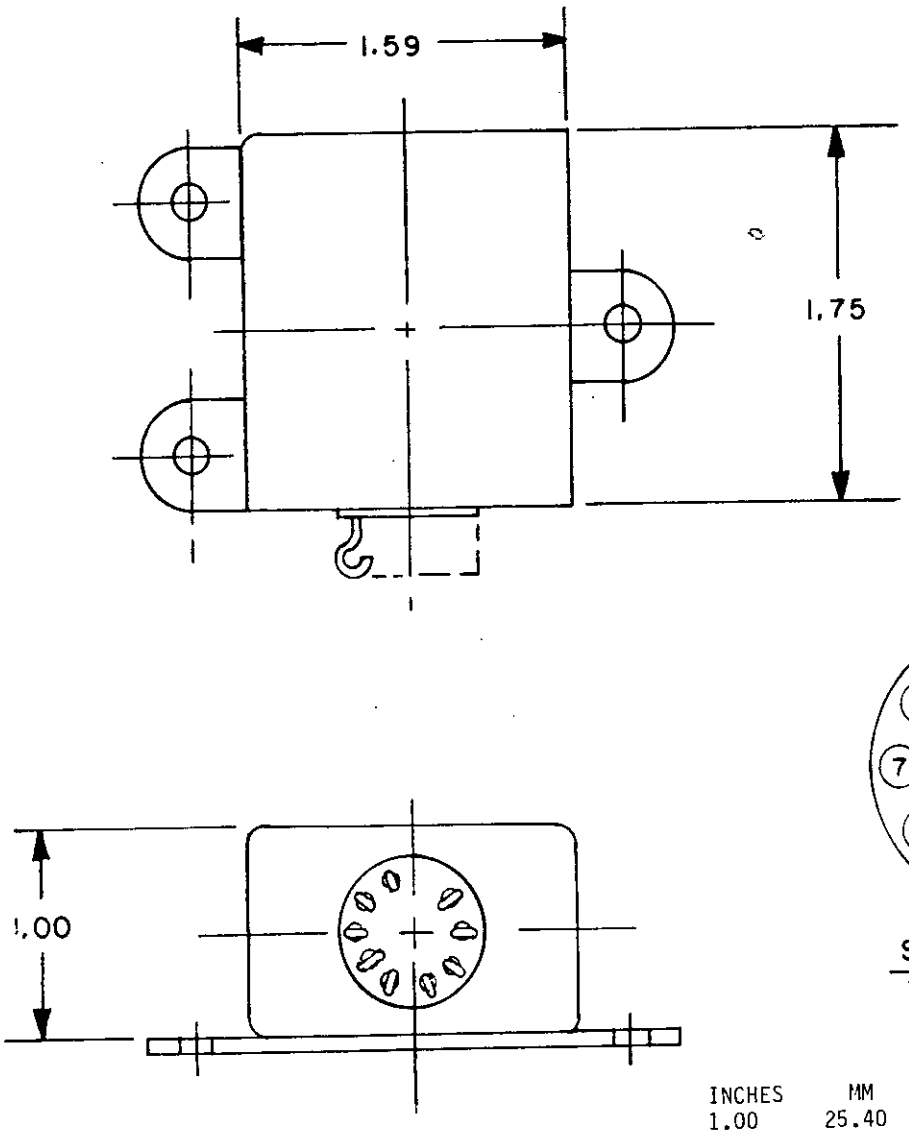

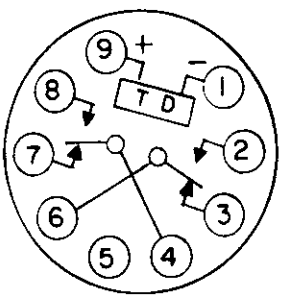

SCHEMATIC

INCHES	MM
1.00	25.40
1.59	40.39
1.75	44.45

FIGURE 601-1. Relay, time delay on operate, DPDT, 2 amperes (MIL-R-83726/7).

Downloaded from http://www.everyspec.com

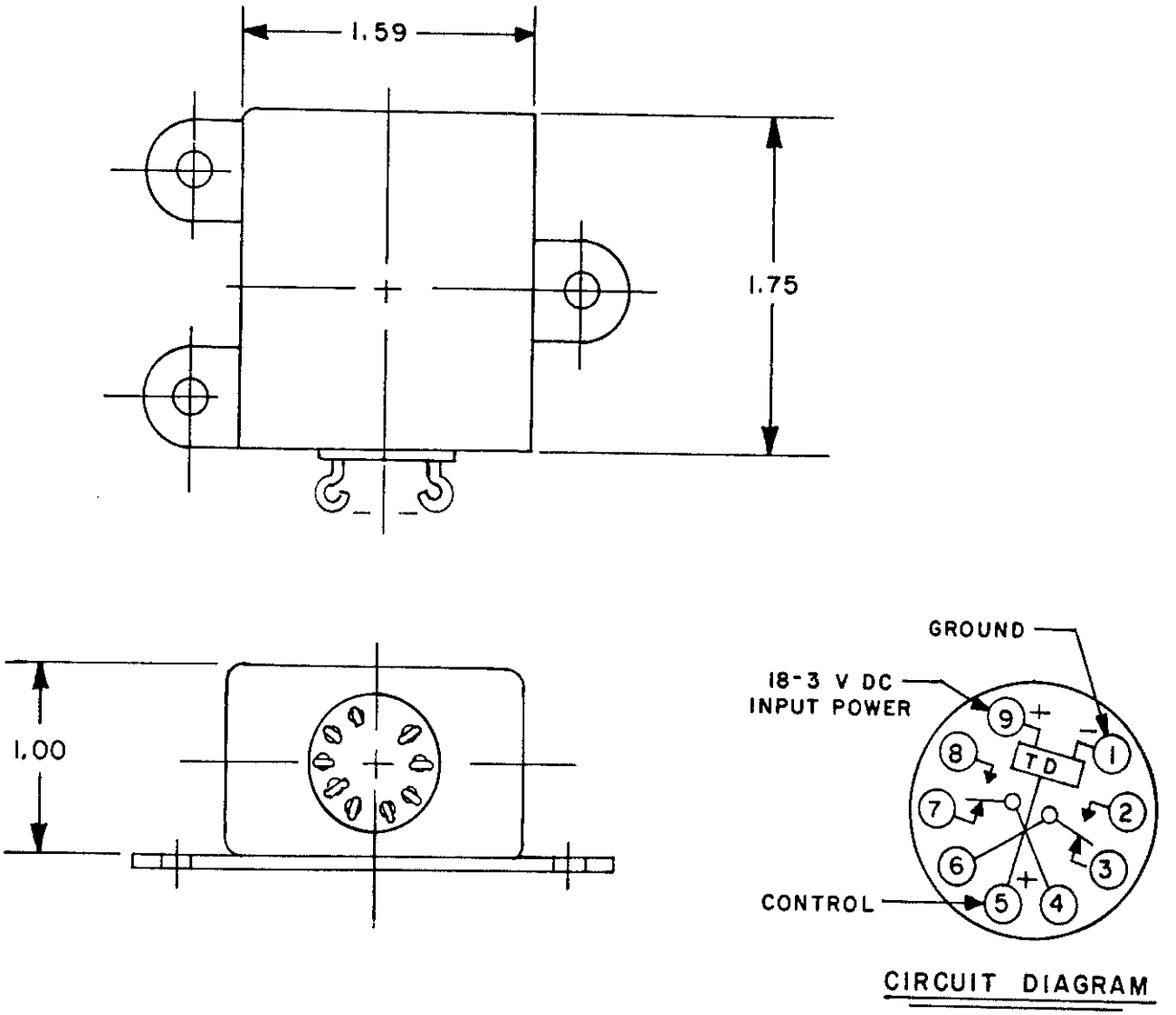

INCHES	MM
1.00	25.40
1.59	40.39
1.75	44.45

FIGURE 601-2. Relay, time delay on release, type IIA, DPDT, 2 amperes (MIL-R-83726/8).

Downloaded from http://www.everyspec.com

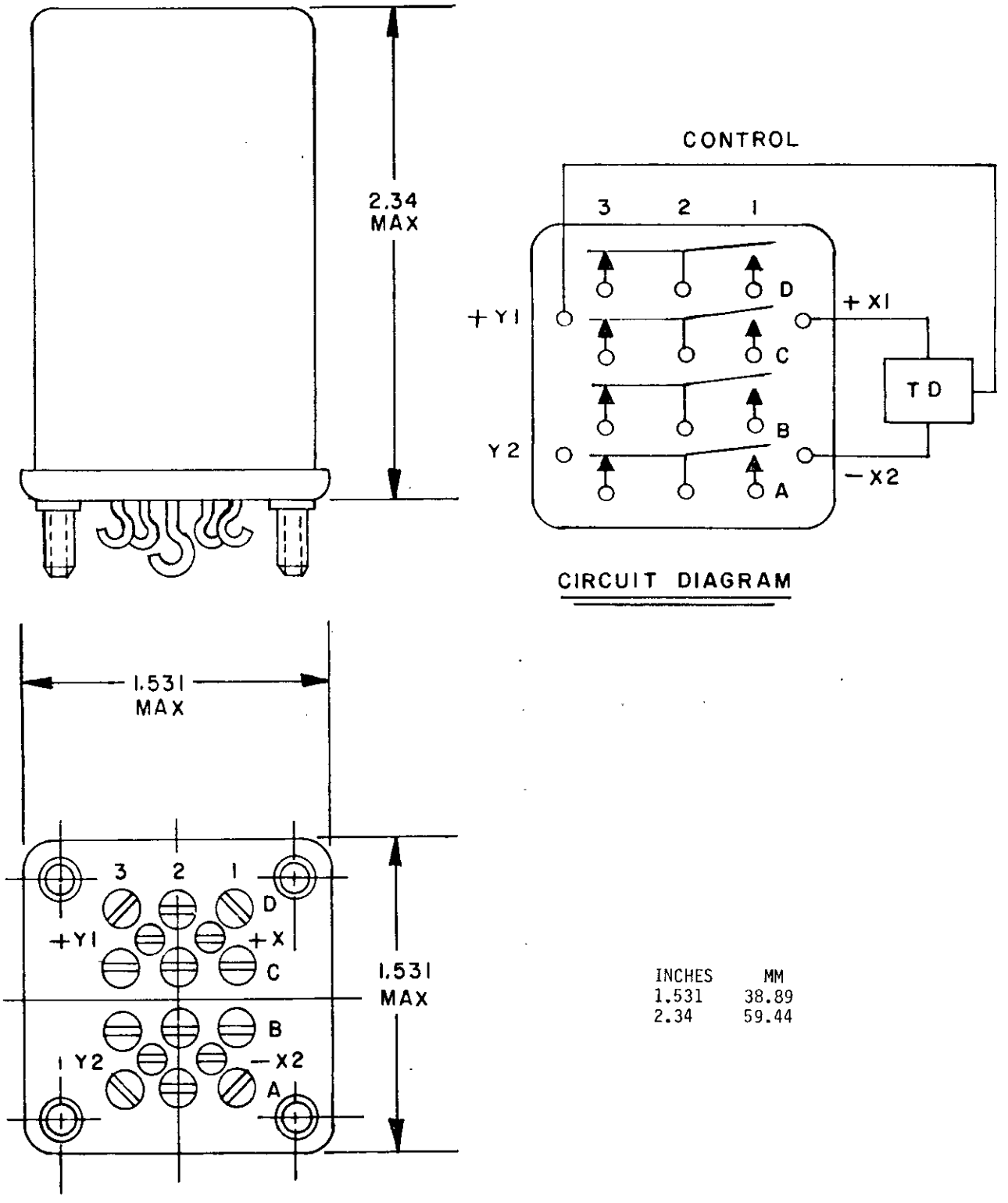

INCHES	MM
1.531	38.89
2.34	59.44

FIGURE 601-3. Relay, time delay on release, type IIA, 4PDT, 10 amperes (MIL-R-83726/12).

Downloaded from http://www.everyspec.com

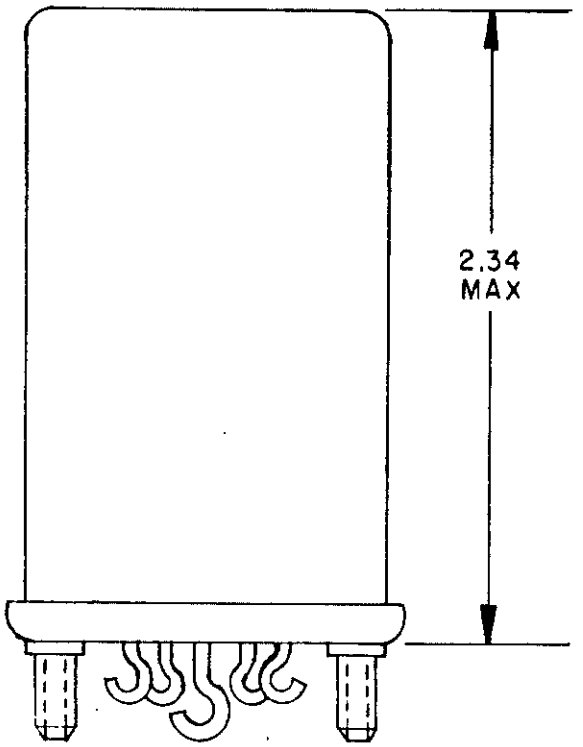

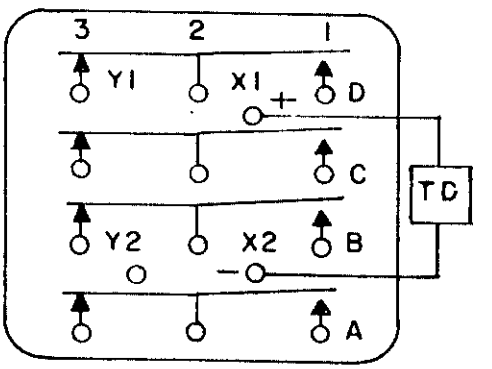

CIRCUIT DIAGRAM

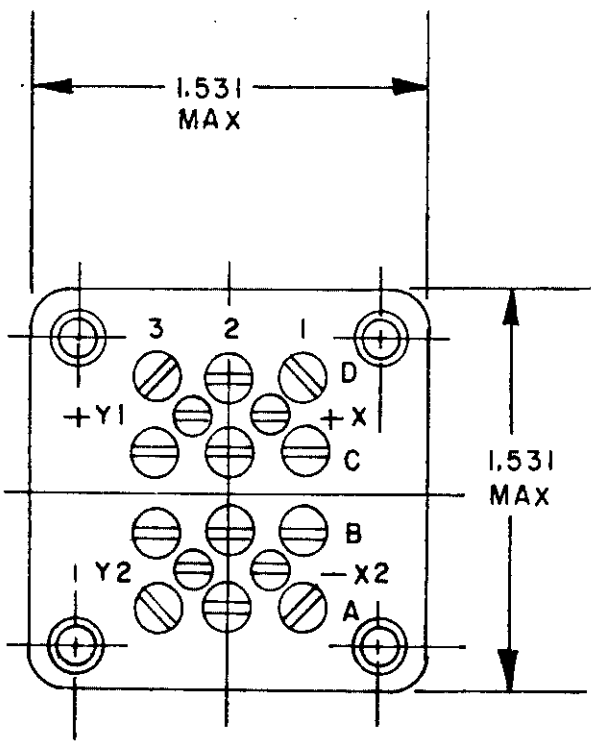

INCHES	MM
1.531	38.89
2.34	59.44

FIGURE 601-4. Relay, time delay on operate, 4PDT, 10 amperes (MIL-R-83726/14).

Downloaded from http://www.everyspec.com

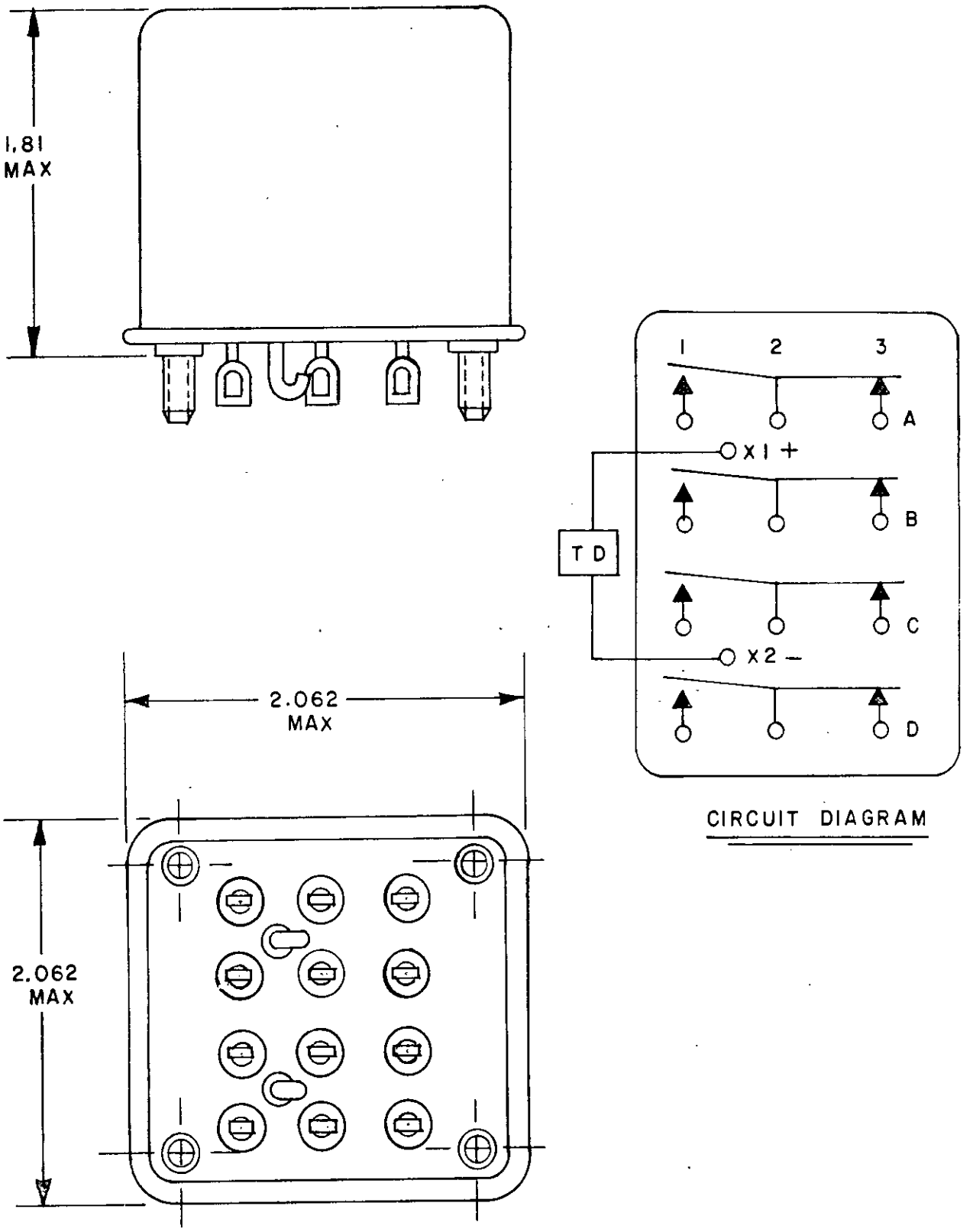

FIGURE 601-5. Relay, time delay on release, type IIB, 4PDT, 10 amperes (MIL-R-83726/23).

Downloaded from http://www.everyspec.com

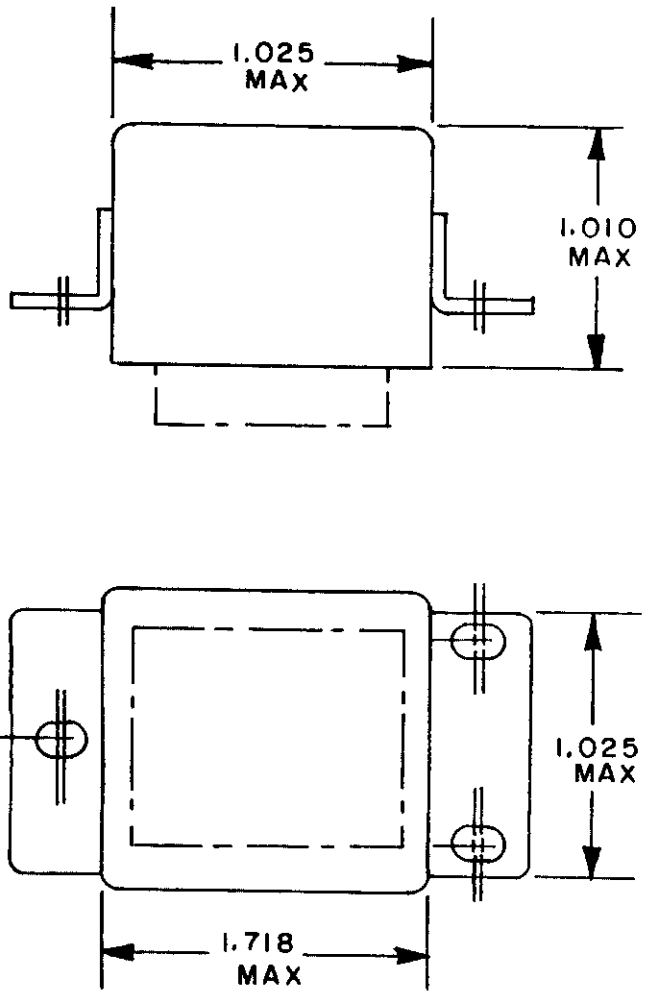

SOLDER HOOK TERMINALS

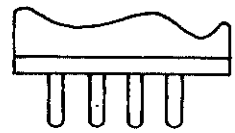

PLUG-IN TERMINALS

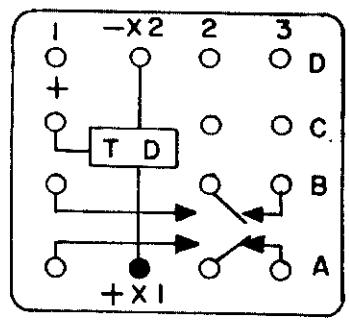

CIRCUIT DIAGRAM

INCHES	MM
1.010	25.65
1.025	26.04
1.718	43.64

FIGURE 601-6. Relay, time delay on operate, DPDT, 10 amperes (MIL-R-83726/28).

Downloaded from http://www.everyspec.com

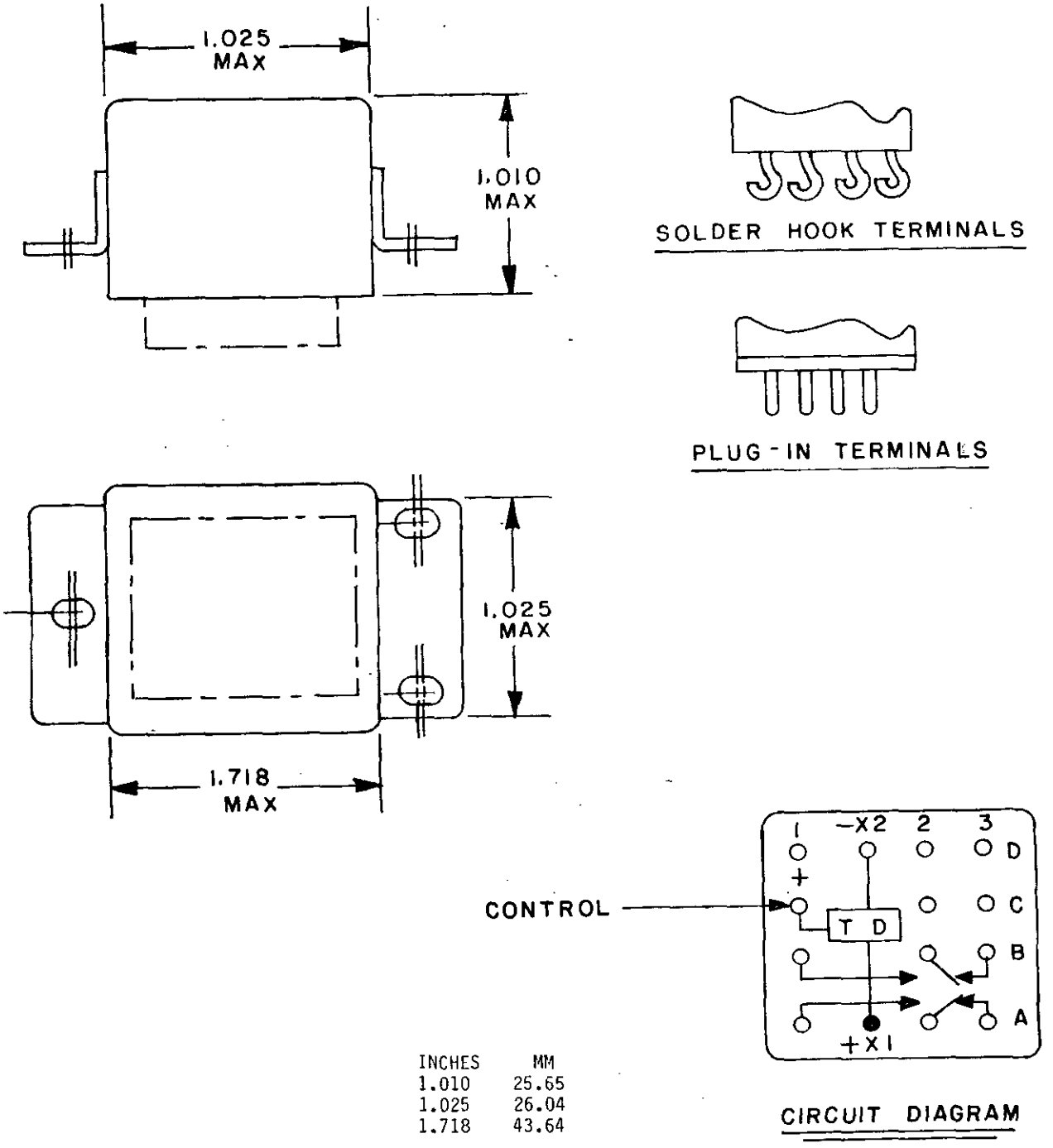

INCHES	MM
1.010	25.65
1.025	26.04
1.718	43.64

FIGURE 601-7. Relay, time delay on release, type IIA, DPDT, 10 amperes (MIL-R-83726/29).

Downloaded from http://www.everyspec.com

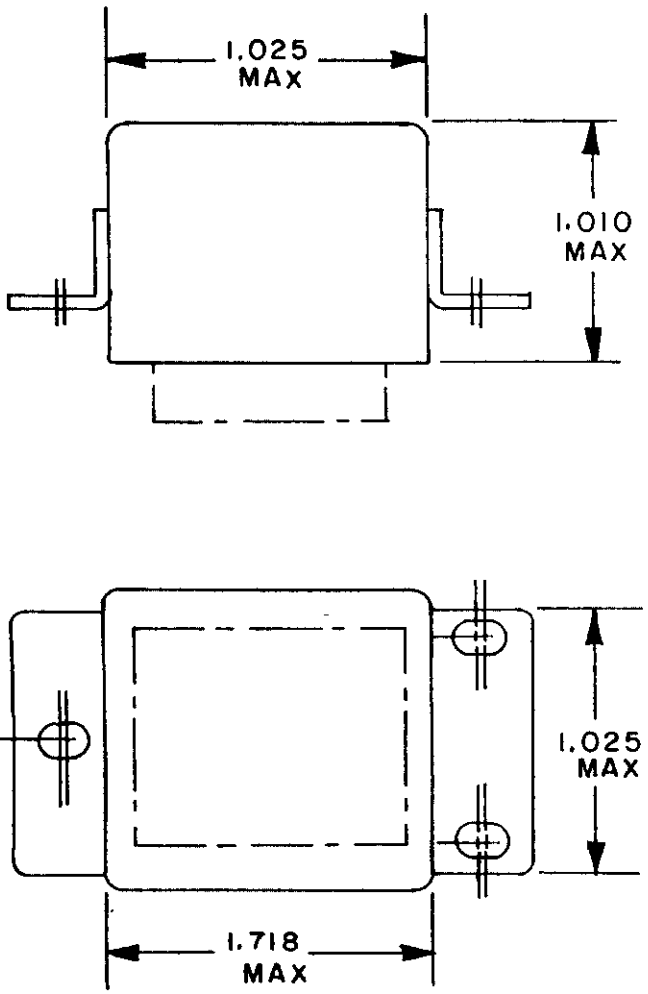

SOLDER HOOK TERMINALS

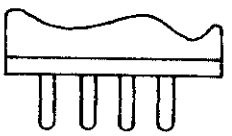

PLUG-IN TERMINALS

INCHES	MM
1.010	25.65
1.025	26.04
1.718	43.64

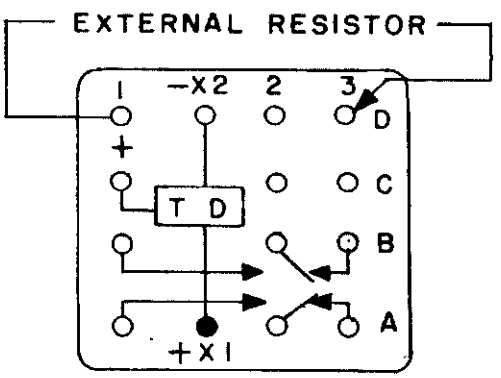

CIRCUIT DIAGRAM

FIGURE 601-8. Relay, adjustable time delay on operate, DPDT, 10 amperes (MIL-R-83726/30).

Downloaded from http://www.everyspec.com

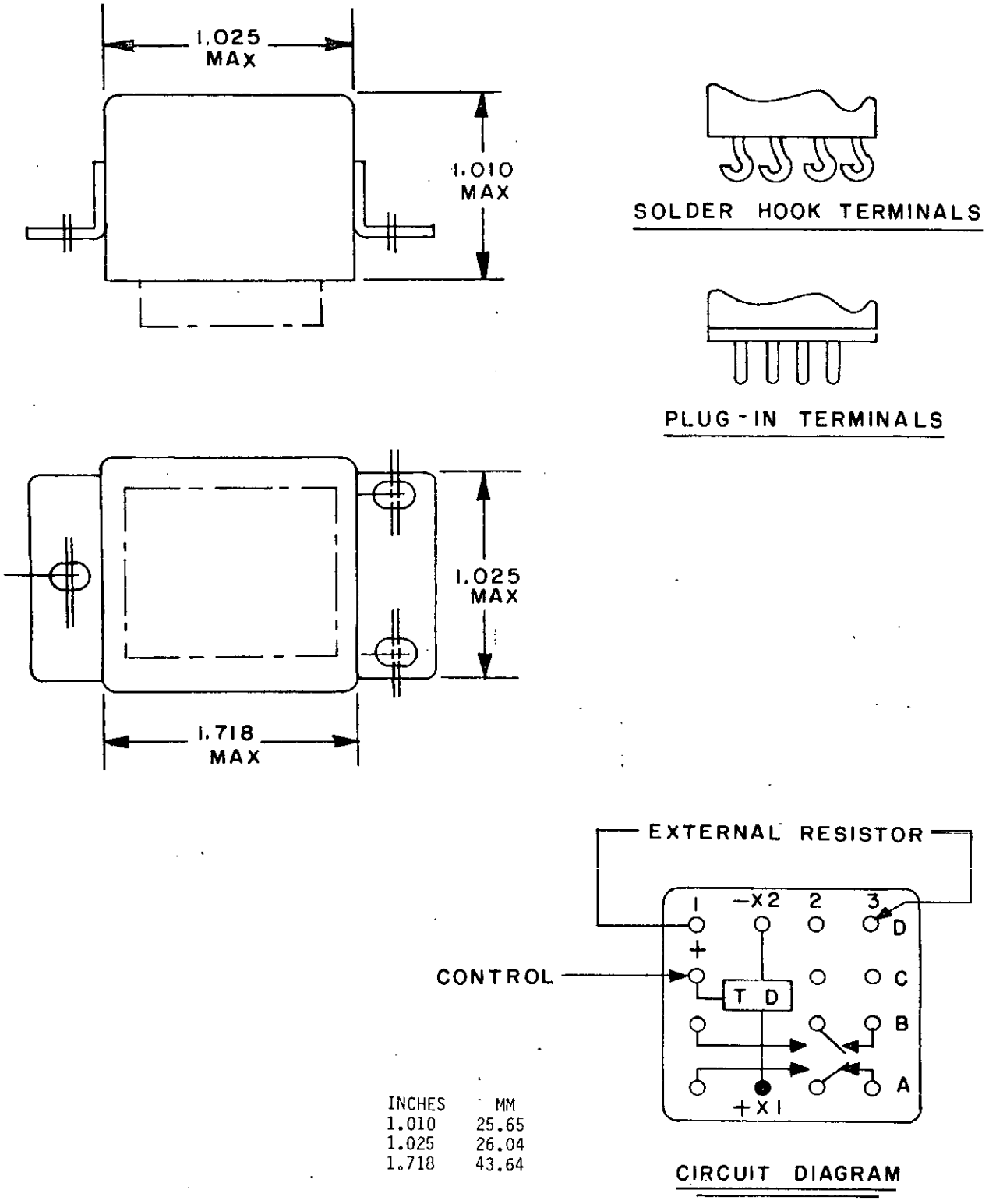

INCHES	MM
1.010	25.65
1.025	26.04
1.718	43.64

FIGURE 601-9. Relay, adjustable time delay on release, type IIA, DPDT, 10 amperes (MIL-R-83726/31).

Downloaded from http://www.everyspec.com

SECTION 602

RELAYS, TIME DELAY,

SOLID STATE

(Applicable specification: MIL-R-83726)

SCOPE: This section covers time delay relays in which the specified time delay interval is obtained through the use of electronic circuits.

Downloaded from http://www.everyspec.com

SECTION 602

(Applicable specification: MIL-R-83726)

TABLE 602.I. Relays, time delay, solid state, part numbers and characteristics.

Rated input voltage (V dc)	Part number M83726/	Figure number	Shock (see table II)	Vibration (see table III)	Time delay (seconds) ±10% On operate	Time delay (seconds) ±10% On release	Resistive 28 V dc	Recycle time in milliseconds max	Terminal style (see table IV)
18 to 31	13-1000	602.1	8	14	.100	---	.3	10	SP
"	-5000	"	"	"	.500	"	"	"	"
"	-7500	"	"	"	.750	"	"	"	"
"	-1001	"	"	"	1	"	"	"	"
"	-2001	"	"	"	2	"	"	"	"
"	-3001	"	"	"	3	"	"	"	"
"	-5001	"	"	"	5	"	"	"	"
"	-7001	"	"	"	7	"	"	"	"
"	-1002	"	"	"	10	"	"	"	"
"	-1202	"	"	"	12	"	"	"	"
"	-1502	"	"	"	15	"	"	"	"
"	-2002	"	"	"	20	"	"	"	"
"	-3002	"	"	"	30	"	"	"	"
"	-4502	"	"	"	45	"	"	"	"
"	-6002	"	"	"	60	"	"	"	"
"	-1203	"	"	"	120	"	"	"	"
"	-1803	"	"	"	180	"	"	"	"
"	-3003	"	"	"	300	"	"	"	"
18 to 32	20-1000 1/	602.2	9	"	.100	"	.250	"	SP or L
"	-5000	"	"	"	.500	"	"	"	1/
"	-7500	"	"	"	.750	"	"	"	"
"	-1001	"	"	"	1	"	"	"	"
"	-2001	"	"	"	2	"	"	"	"
"	-3001	"	"	"	3	"	"	"	"
"	-5001	"	"	"	5	"	"	"	"
"	-7001	"	"	"	7	"	"	"	"
"	-1002	"	"	"	10	"	"	"	"
"	-1202	"	"	"	12	"	"	"	"
"	-1502	"	"	"	15	"	"	"	"
"	-2002	"	"	"	20	"	"	"	"
"	-3002	"	"	"	30	"	"	"	"
"	-4502	"	"	"	45	"	"	"	"
"	-6002	"	"	"	60	"	"	"	"
"	-1203	"	"	"	120	"	"	"	"
"	-1803	"	"	"	180	"	"	"	"
"	-3003	"	"	"	300	"	"	"	"

See footnotes at end of table.

Downloaded from http://www.everyspec.com

SECTION 602

(Applicable specification: MIL-R-83726)

TABLE 602.I. Relays, time delay, solid state, part numbers and characteristics - Continued.

Rated input voltage (V dc)	Part number M83726/	Figure number	Shock (see table II)	Vibration (see table III)	Time delay (seconds) ±10% On operate	Time delay (seconds) ±10% On release	Resistive 28 V dc	Recycle time in milliseconds max	Terminal style (see table IV)
18 to 32	21-001	602.3	9	14	.05-.5 2/	---	.250	10	SP
"	-005	"	"	"		"	"	"	L
"	-002	"	"	"	.5-5 2/	"	"	"	SP
"	-006	"	"	"		"	"	"	L
"	-003	"	"	"	5-50 2/	"	"	"	SP
"	-007	"	"	"		"	"	"	L
"	-004	"	"	"	50-500 2/	"	"	"	SP
"	-008	"	"	"		"	"	"	L
"	22-XXXX 3/	602.4	"	"	Repeat cycle timer (seconds ±10%) .1-60 3/		"	"	SP or L 1/

1/ Relays are available with printed circuit type or solder lug termination. To specify solder lug terminals and a flange mount add a suffix letter "A" following the last digit of the part number. (Example: M83726/20-1000A). To receive a printed circuit type termination suffix letter shall be left off (Example: M83726/20-1000).

2/ Variable time delays must be used with external resistor. See specification sheet for the determination of the value of the resistor.

3/ Repeat cycle timer within the listed complete cycle range are available. To establish a part number use the following information: The part number consists of the basic number of this specification sheet and a dash number denoting the length of one complete cycle, expressed in milliseconds. The first three digits are significant figures, the last digit is the number of zeros following the first three.

Downloaded from http://www.everyspec.com

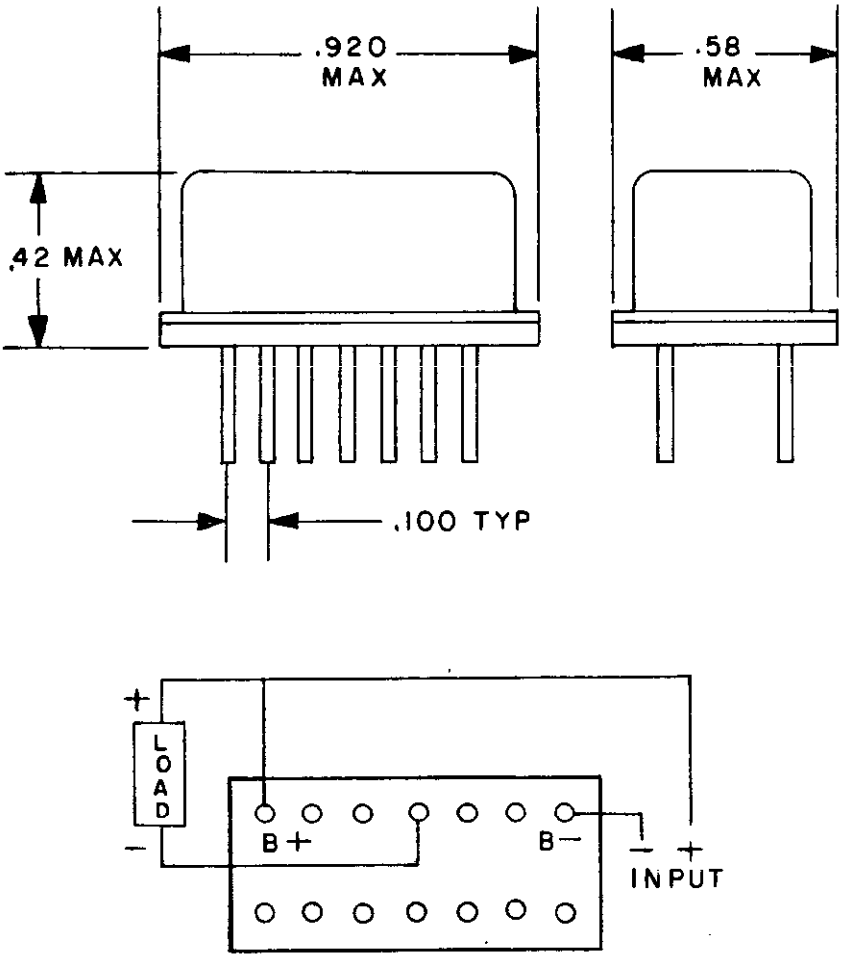

INCHES	MM
.42	10.7
.58	14.7
.920	23.37

FIGURE 602-1. Relay, time delay on operate SPST, N.O., 300 milliamperes (MIL-R-83726/13).

Downloaded from http://www.everyspec.com

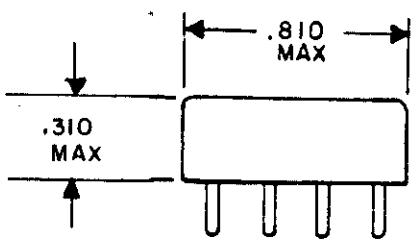

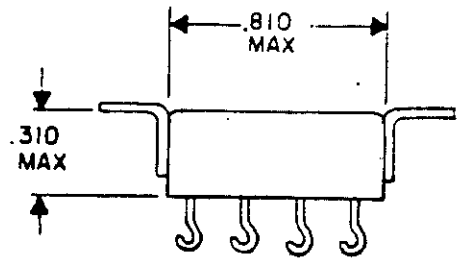

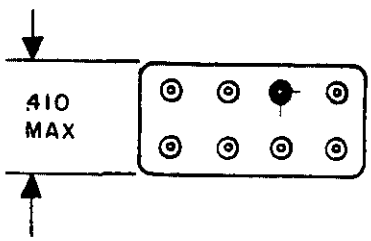

PRINTED CIRCUIT TYPE

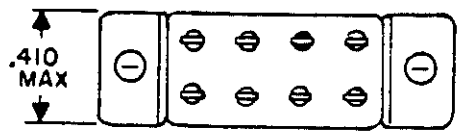

FLANGE MOUNTING A

INCHES	MM
.310	7.87
.410	10.41
.810	20.57

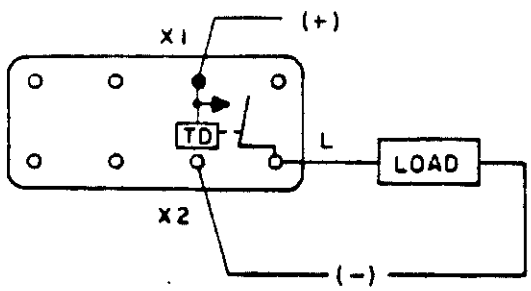

CIRCUIT DIAGRAM

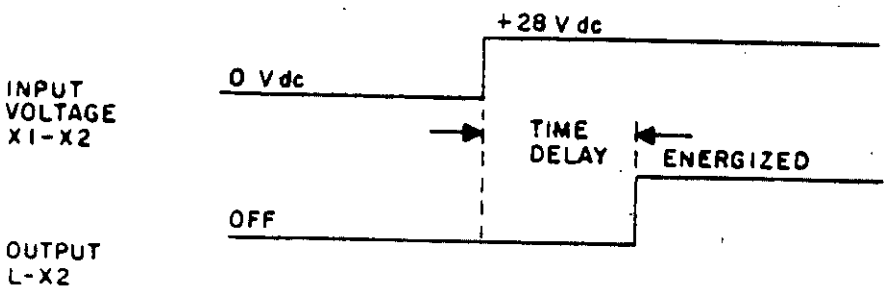

TIMING DIAGRAM

FIGURE 602-2. Relay, time delay on operate, SPST, N.O., 250 milliamperes (MIL-R-83726/20).

Downloaded from http://www.everyspec.com

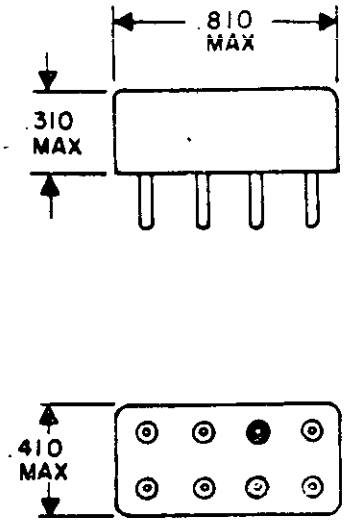

PRINTED CIRCUIT TYPE

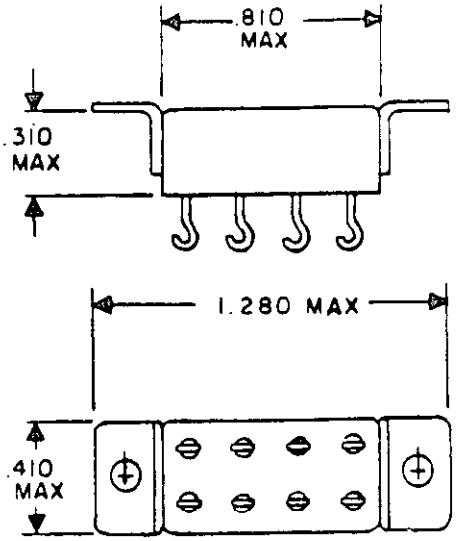

FLANGE MOUNTING A

INCHES	MM
.310	7.87
.410	10.41
.810	20.57
1.062	26.97
1.280	32.51

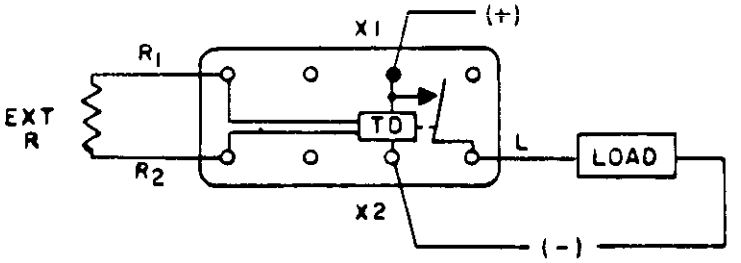

CIRCUIT DIAGRAM

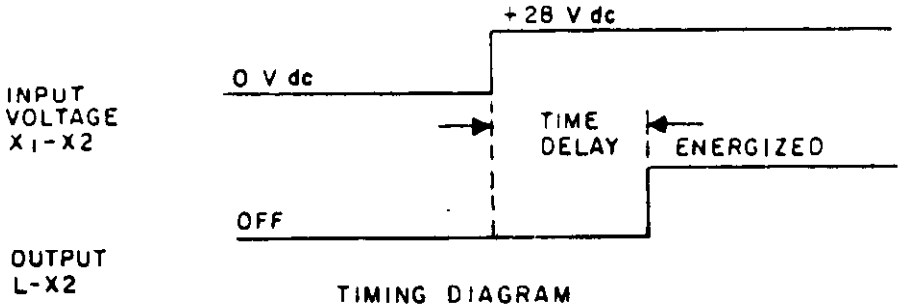

TIMING DIAGRAM

FIGURE 602-3. Relay, variable time delay on operate, SPST, N.O., 250 milliamperes (MIL-R-83726/21).

Downloaded from http://www.everyspec.com

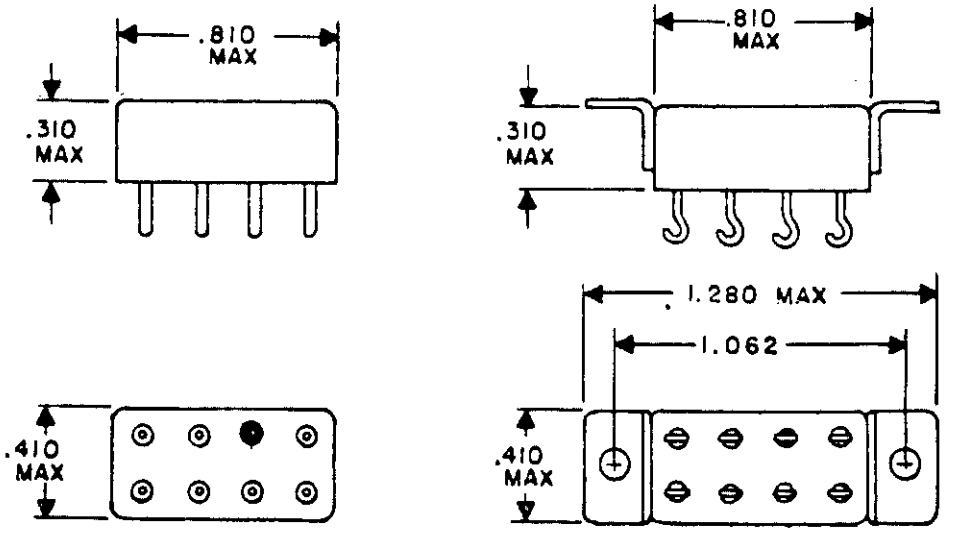

PRINTED CIRCUIT TYPE

FLANGE MOUNTING A

INCHES	MM
.310	7.87
.410	10.41
.810	20.57
1.062	26.97
1.280	32.51

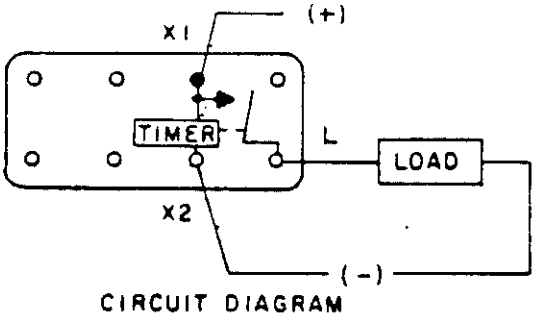

CIRCUIT DIAGRAM

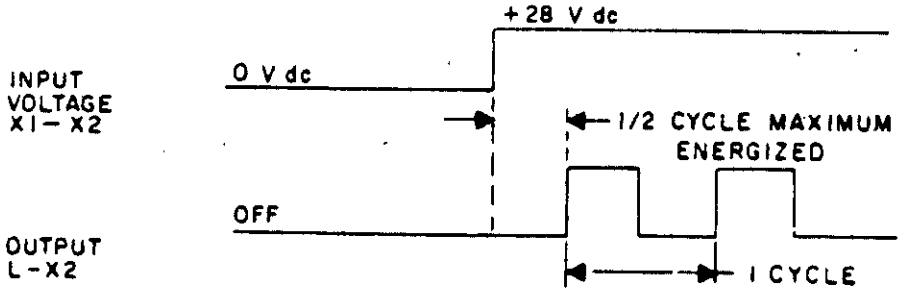

TIMING DIAGRAM

FIGURE 602-4. Relay, repeat cycle timer, SPST, N.O., 250 milliamperes (MIL-R-83726/22).

Downloaded from http://www.everyspec.com

SECTION 700

RELAYS, VACUUM, HIGH VOLTAGE

(Applicable specification: MIL-R-83725)

Section

701 Relays, vacuum, high voltage (dc coil operated)

Downloaded from http://www.everyspec.com

SECTION 701

RELAYS, VACUUM, HIGH VOLTAGE (DC COIL OPERATED)

(Applicable specification: MIL-R-83725)

SCOPE: This section covers relays, vacuum, high voltage, operated from a direct current coil.

Downloaded from http://www.everyspec.com

SECTION 701

(Applicable specification: MIL-R-83725)

TABLE 701.I Relays, vacuum, high voltage, dc coil operated, part numbers and characteristics.

Rated coil voltage dc	Part number	Figure number	Operating temperature range (see table I)	Vibration (see table III)	Load ratings: Carry only: Frequency	Carry only: Voltage kV	Carry only: Current amperes	Switching: Frequency	Switching: Voltage kV	Switching: Current amperes
	M83725/1									
26.5	-001	701-1	J	11	dc-60 Hz	12	15			
"	-002	"	"	"	dc-2.5 MHz	10	10			
"	-003	"	"	"	dc-16 MHz	8	6			
"	-004	"	"	"						
"	-005	"	"	"						
"	-006	"	"	"						
	M83725/2									
"	-001	701-2	"	13	dc-60 Hz	25	25			
"	-002	701-2	"	13	dc-2.5 MHz	20	13			
"	-003	701-2	"	13	dc-16 MHz	15	8			
	M83725/3									
"	-001	701-3	A	13	dc-60 Hz	2	8		1	1
"	-002	701-3	A	13	dc-2.5 MHz	2	6		2	.5
					dc-16 MHz	2	4	1kHz - 60 MHz	1	2
	M83725/4									
"	-001	701-4	J	13	dc	2.5	3			
15	-002	701-4	J	13	dc	.1	18			
	M83725/5									
26.5	-001	701-5	J	13	dc-60 Hz	3.5	18			
					dc-2.5 MHz	2.5	14			
					dc-16 MHz	2.0	9			
					dc-32 MHz	1.5	7			

Downloaded from http://www.everyspec.com

TABLE 701.I Relays, vacuum, high voltage, dc coil operated, part numbers and characteristics - Continued.

Rated coil voltage dc	Part number	Figure number	Operating temperature range (see table I)	Vibration (see table III)	Load ratings: Carry only: Frequency	Carry only: Voltage kV	Carry only: Current amperes	Switching: Frequency	Switching: Voltage	Switching: Current
	M83725/6									
26.5	-001	701-6	J	13	dc-60 Hz	3.6	12			
"	-002	701-6	"	"	dc-2.5 MHz	3.6	10			
"	-003	701-6	"	"	dc-16 MHz	3.2	6			
"	-004	701-6	"	"	dc-2.5 MHz	4.0	10			
"			"	"	dc-16 MHz	3.2	8			
	M83725/7									
"	-001	701-7	"	13	dc-60 Hz	3.6	12			
"	-002	701-7	"	"	dc-2.5 MHz	3.6	10			
					dc-16 MHz	3.2	6			
"	-003	701-7	"	"	dc-16 MHz	3.2	8			
"			"	"	dc-2.5 MHz	4.0	10			
	M83725/8									
"	-001	701-8	"	13	dc-60 Hz	3.6	12			
"	-002	701-8	"	"	dc-2.5 MHz	3.6	10			
					dc-16 MHz	3.2	6			
"	-003	701-8	"	"	dc-16 MHz	3.2	8			
"			"	"	dc-2.5 MHz	4.0	10			
	M83725/9									
"	-001	701-9	"	13	dc-60 Hz	7	12			
"	-002	701-9	"	"	dc-2.5 MHz	7	10			
"	-003	701-9	"	"	dc-16 MHz	6	6			
"	-003	701-8	"	"	dc-16 MHz	6	8			
"			"	"	dc-2.5 MHz	9	10			
	M83725/10									
"	-001	701-10	"	13	dc-60 Hz	10	12			
"	-002	701-10	"	"	dc-2.5 MHz	8	10			
					dc-16 MHz	6	6			
	M83725/11									
"	-001	701-11	"	13						
"	-002	701-11	"	"	dc-60 Hz	3.6	12			
"	-003	701-11	"	"	dc-2.5 MHz	3.6	10			
"			"	"	dc-16 MHz	3.2	6			
"	-004	701-11	"	"	dc-16 MHz	3.2	8			
"			"	"	dc-2.5 MHz	4.0	10			

Downloaded from http://www.everyspec.com

TABLE 701.I Relays, vacuum, high voltage, dc coil operated, part numbers and characteristics - Continued.

Rated coil voltage dc	Part number	Figure number	Operating temperature range (see table I)	Vibration (see table III)	Load ratings: Carry only: Frequency	Carry only: Voltage kV	Carry only: Current amperes	Switching: Frequency	Switching: Voltage	Switching: Current
	M83725/12									
12.0	-001	701-12	J	2	dc-60 Hz	3.6	12			
26.5	-002	701-12	"	"	dc-2.5 MHz	3.6	10			
12.0	-003	701-12	"	"	dc-16 MHz	3.2	6			
26.5	-004	701-12	"	"						
	M83725/13									
26.5	-001	701-13	J	2	dc-60 Hz	9	12			
26.5	-002	701-13	"	"	dc-2.5 MHz	7	10			
26.5	-003	701-13	"	"	dc-16 MHz	6	6			
26.5	-004	701-13	"	"	dc-16 MHz	6	8			
26.5		701-13	"	"	dc-2.5 MHz	9	10			
	M83725/14	701-14								
DASH NUMBERS AND CHARACTERISTICS OMITTED PENDING COMPLETION OF QUALIFICATION.										
	M83725/15									
6	-001	701-15	J	---	dc-60 Hz	15	75			
12	-002	701-15	"	"	dc-2.5 MHz	13	22			
26.5	-003	701-15	"	"	dc-16 MHz	10	15			
48	-004	701-15	"	"						
115	-005	701-15	"	"						
	M83725/16									
12	-001	701-16	J	13	dc-60 Hz	9	12			
26.5	-002	701-16	"	"	dc-2.5 MHz	7	10			
12	-003	701-16	"	"	dc-16 MHz	6	6			
26.5	-004	701-16	"	"						
	M83725/17									
26.5	-001	701-17	J	13	dc-60 HZ	10	12			
26.5	-002	701-17	"	"	dc-2.5 MHz	7	10			
					dc-16 MHz	6	6 amp			

Downloaded from http://www.everyspec.com

TABLE 701.I Relays, vacuum, high voltage, dc coil operated, part numbers and characteristics - Continued.

Rated coil voltage dc	Part number	Figure number	Operating temperature range (see table I)	Vibration (see table III)	Load ratings: Carry only: Frequency	Carry only: Voltage kV	Carry only: Current amperes	Switching: Frequency	Switching: Voltage	Switching: Current
	M83725/18									
26.5	-001	701-18	J	See spec	dc	7.5	8			
"	-002	701-18	"	See spec	dc-60 Hz	7.5	12			
"			"		dc-2.5 MHz	7.5	10			
"			"		dc-16 MHz	7.0	5			
"			"		dc-30 MHz	5.0	2			
"	-003	701-18	"	See spec	dc	7.5	8			
					dc-60 Hz	7.5	12			
					dc-2.5 MHz	7.5	10			
					dc-16 MHz	7.0	5			
					dc-32 MHz	5.0	5			

Downloaded from http://www.everyspec.com

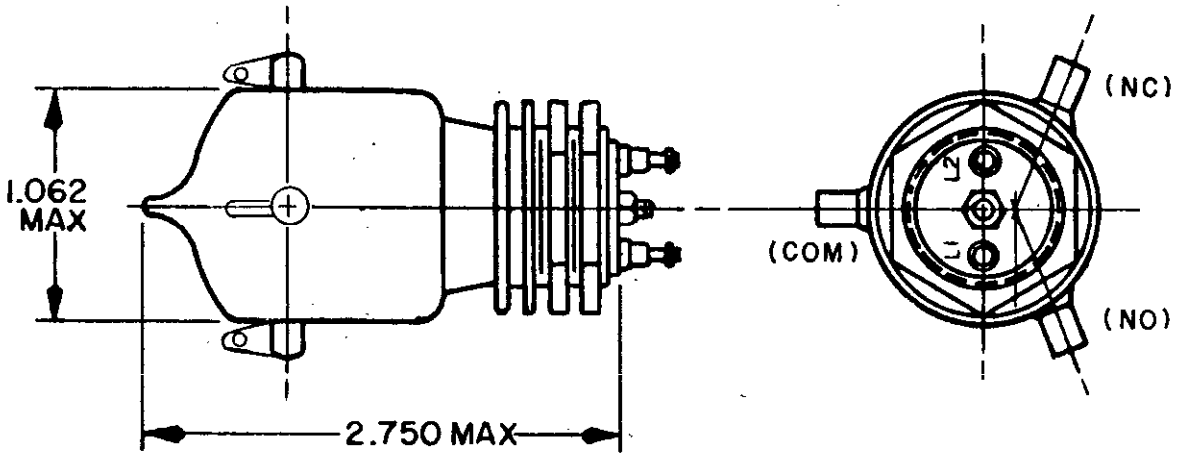

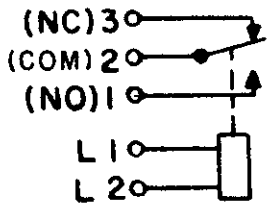

CIRCUIT DIAGRAM

INCHES	MM
1.062	26.97
2.750	69.85

FIGURE 701-1. Relay, vacuum, SPST, 15 amperes, 12 kilovolts (MIL-R-83725/1(USAF).

Downloaded from http://www.everyspec.com

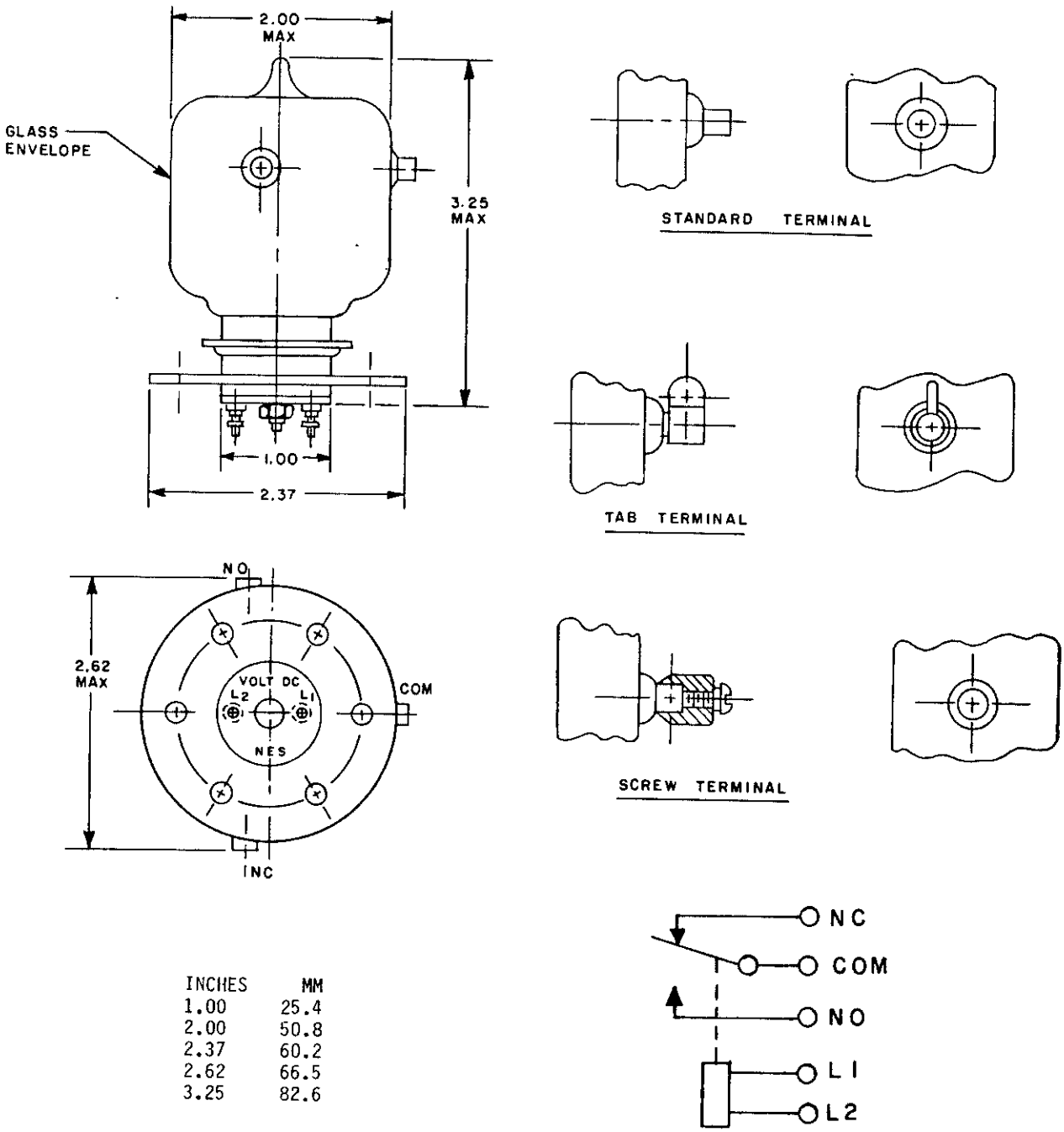

INCHES	MM
1.00	25.4
2.00	50.8
2.37	60.2
2.62	66.5
3.25	82.6

FIGURE 701-2. Relay, vacuum, SPDT, 25 amperes, 25 kilovolts (MIL-R-83725/2(USAF).

Downloaded from http://www.everyspec.com

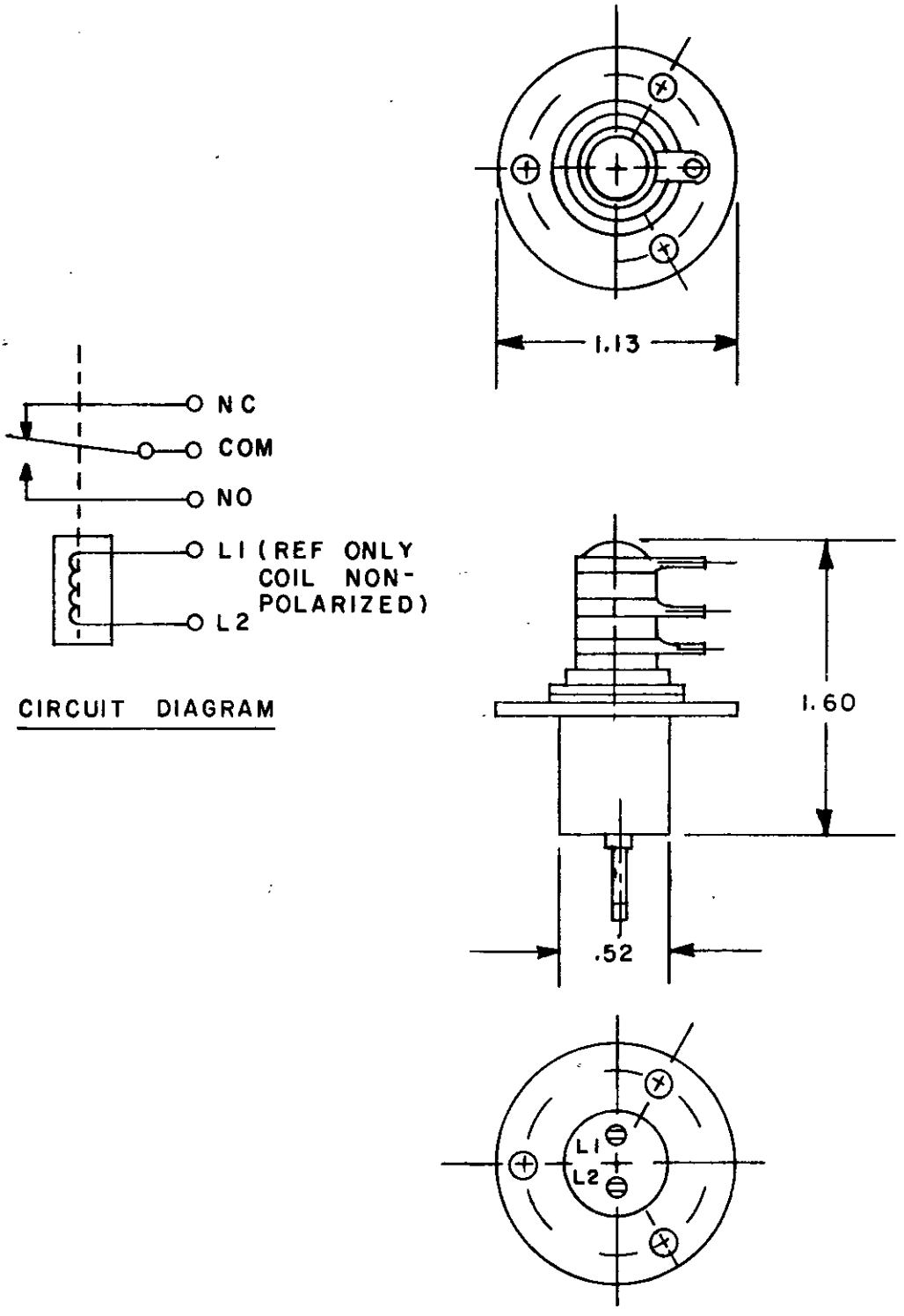

FIGURE 701-3. Relay, vacuum, SPDT, dc, 8 amperes (MIL-R-83725/3(USAF).

Downloaded from http://www.everyspec.com

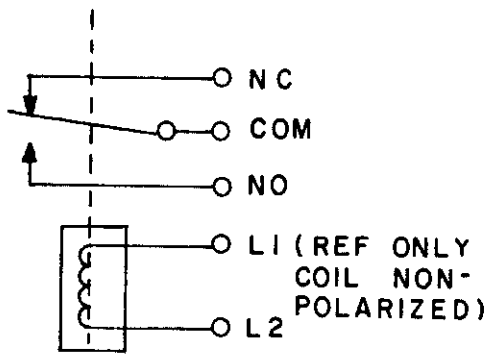

CIRCUIT DIAGRAM

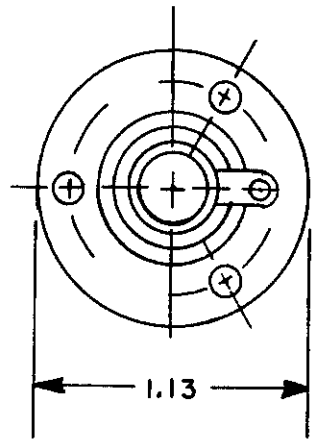

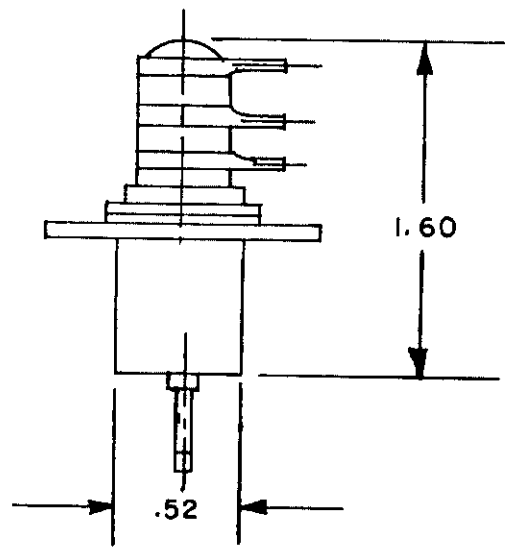

INCHES	MM
.52	13.2
.66	16.8
.73	18.5
1.13	28.7
1.60	40.6

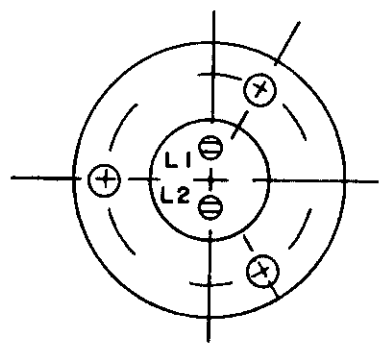

FIGURE 701-3. Relay, vacuum, SPDT, 8 amperes (MIL-R-83725/3(USAF) - Continued.

Downloaded from http://www.everyspec.com

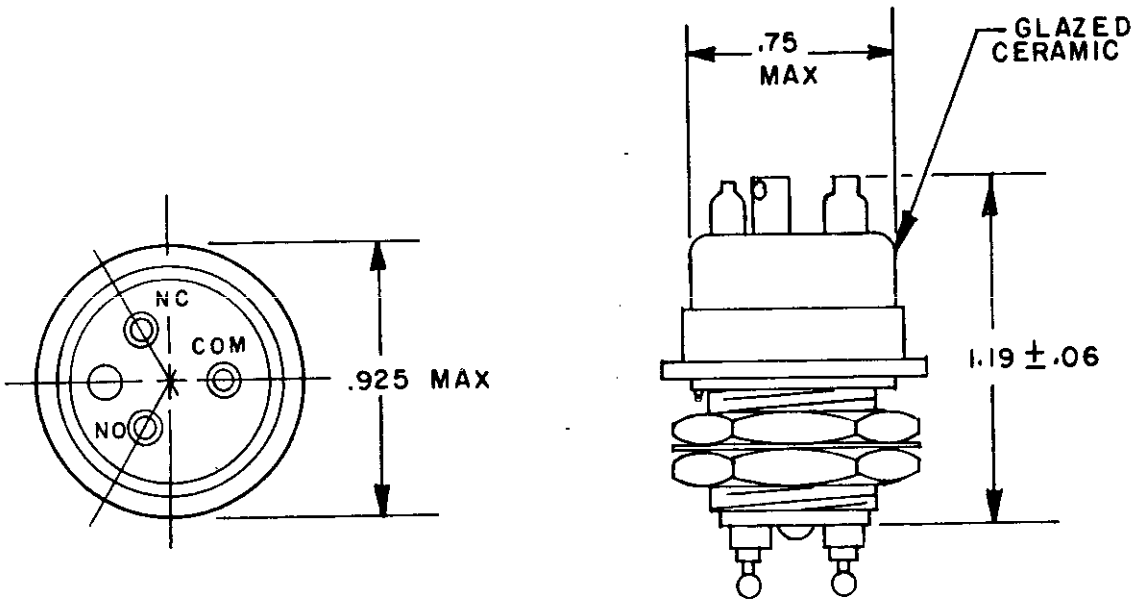

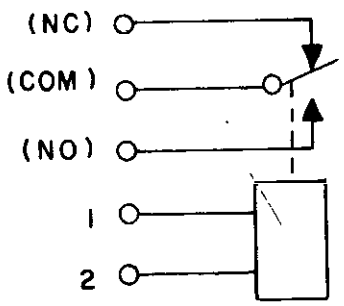

CIRCUIT DIAGRAM

INCHES	MM
.06	1.52
.75	19.05
.925	23.40
1.19	30.23

FIGURE 701-4. Relay, vacuum, SPDT, 3 ampere load switching, 2.5 kilovolts, dc (MIL-R-83725/4(USAF).

Downloaded from http://www.everyspec.com

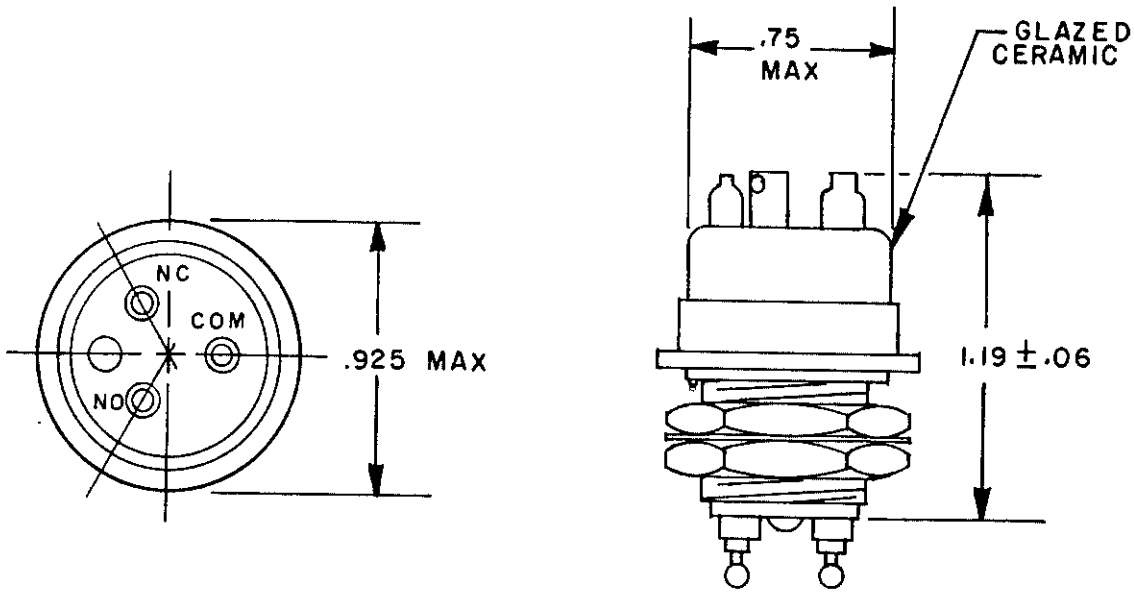

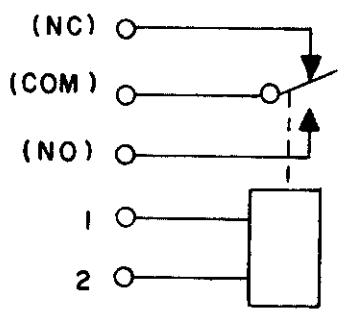

CIRCUIT DIAGRAM

INCHES	MM
.06	1.52
.75	19.05
.925	23.40
1.19	30.23

FIGURE 701-5. Relay, vacuum, SPDT, 18 amperes, 3.5 kilovolts (MIL-R-83725/5(USAF).

Downloaded from http://www.everyspec.com

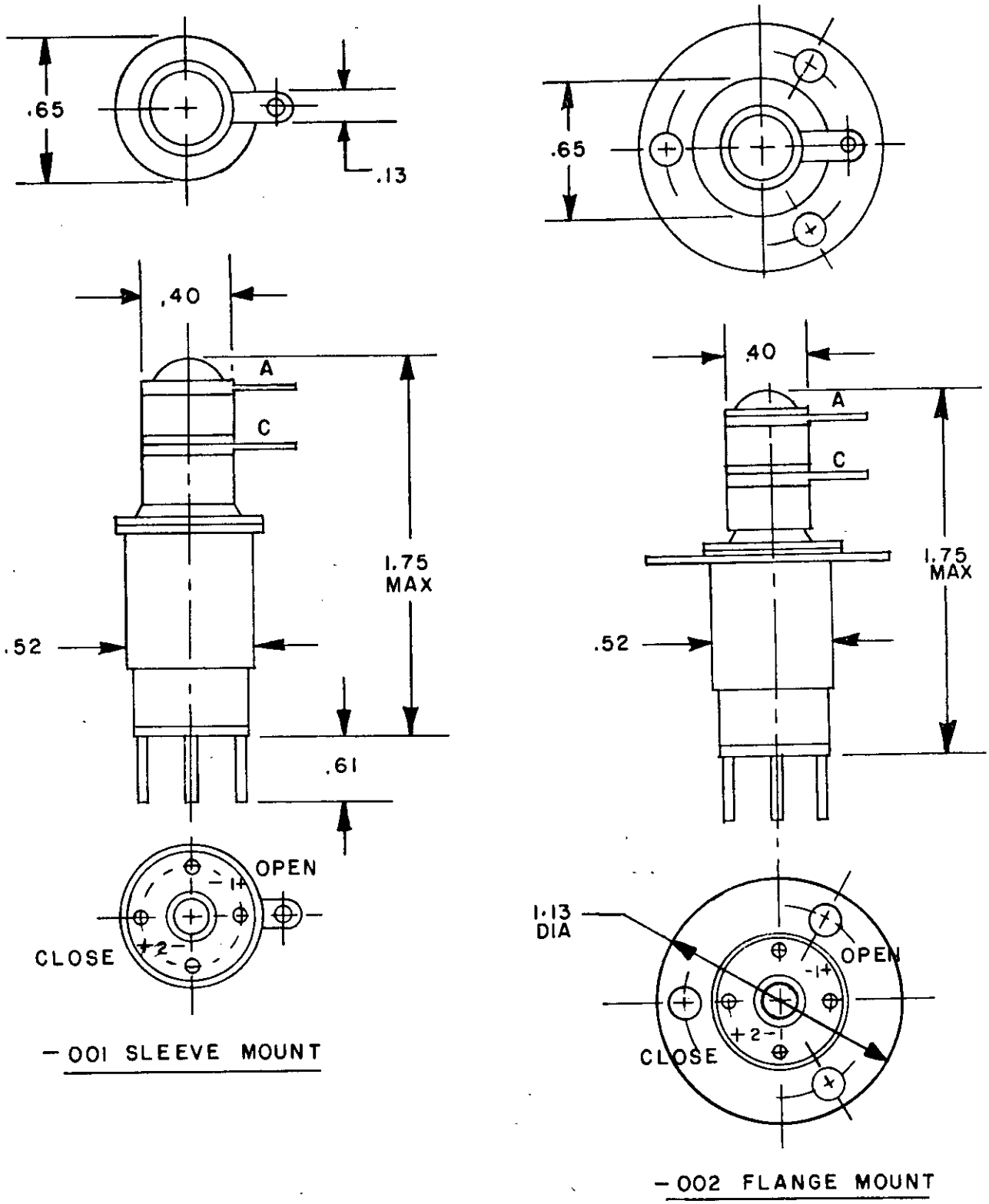

FIGURE 701-6. Relay, vacuum, SPST, 12 amperes, 3.6 kilovolts (MIL-R-83725/6(USAF).

Downloaded from http://www.everyspec.com

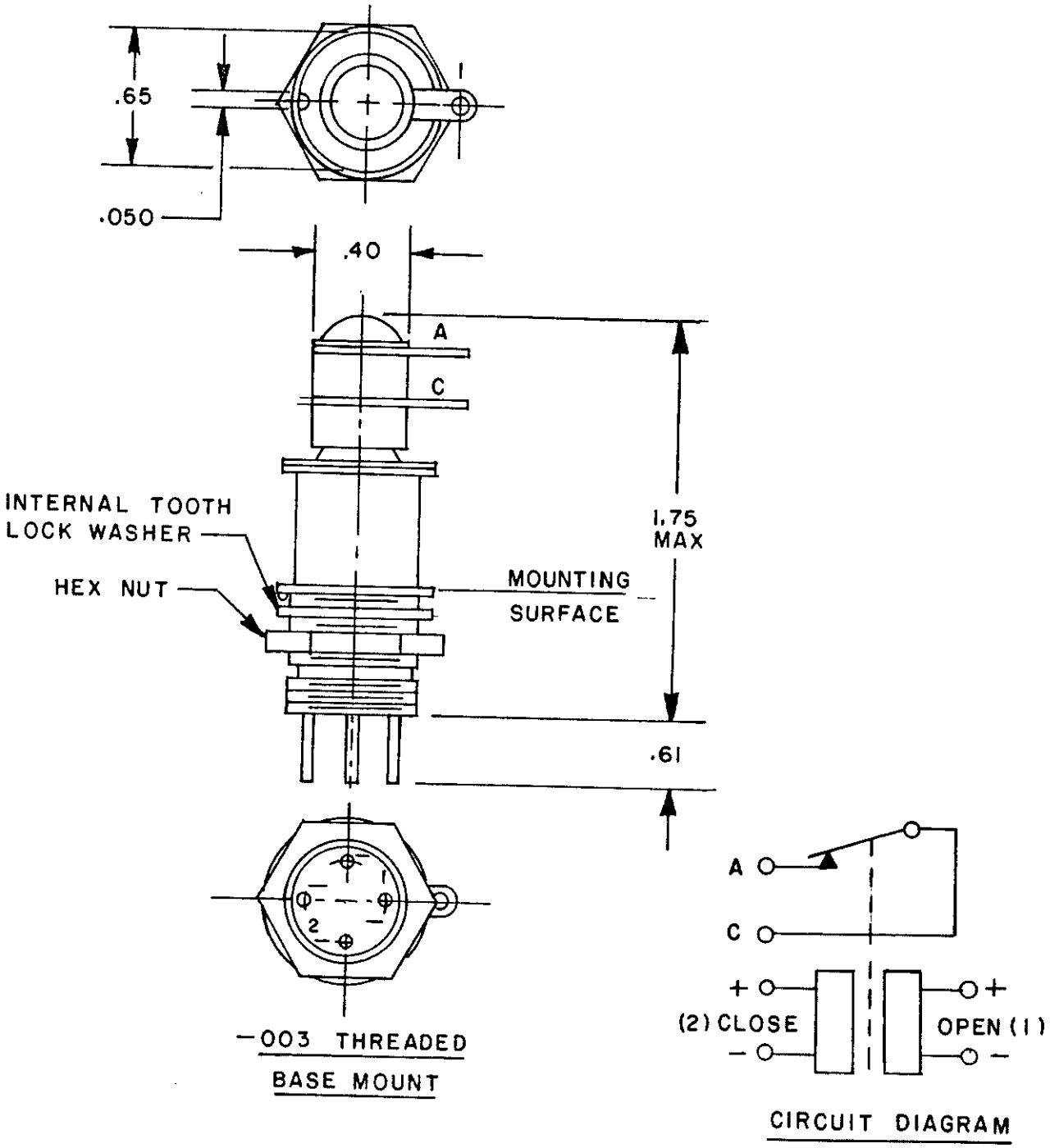

INCHES	MM
.050	1.27
.40	10.2
.61	15.5
.65	16.5
1.75	44.4

FIGURE 701-6. Relay, vacuum, SPST, 12 amperes, 3.6 kilovolts (MIL-R-83725/6) - Continued.

Downloaded from http://www.everyspec.com

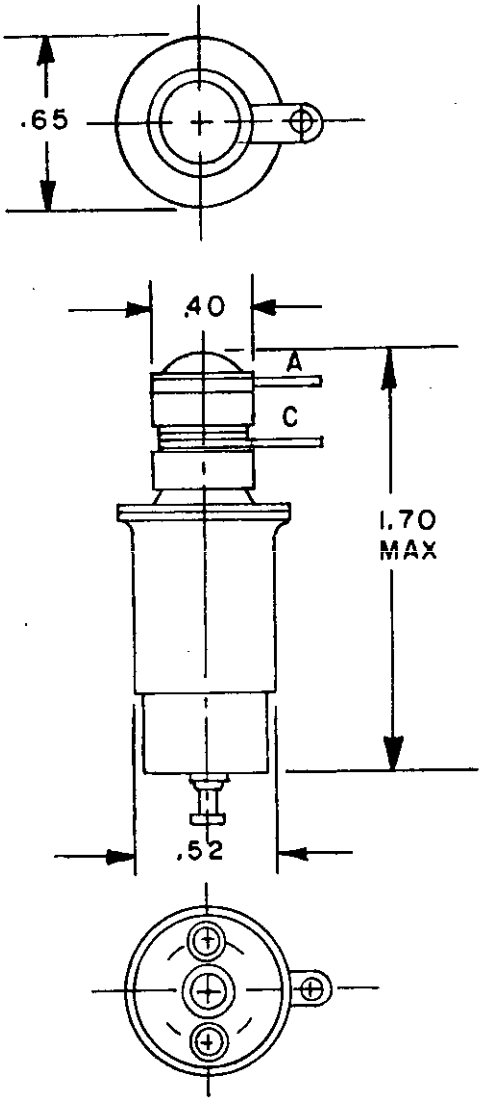

-001 SLEEVE MOUNT

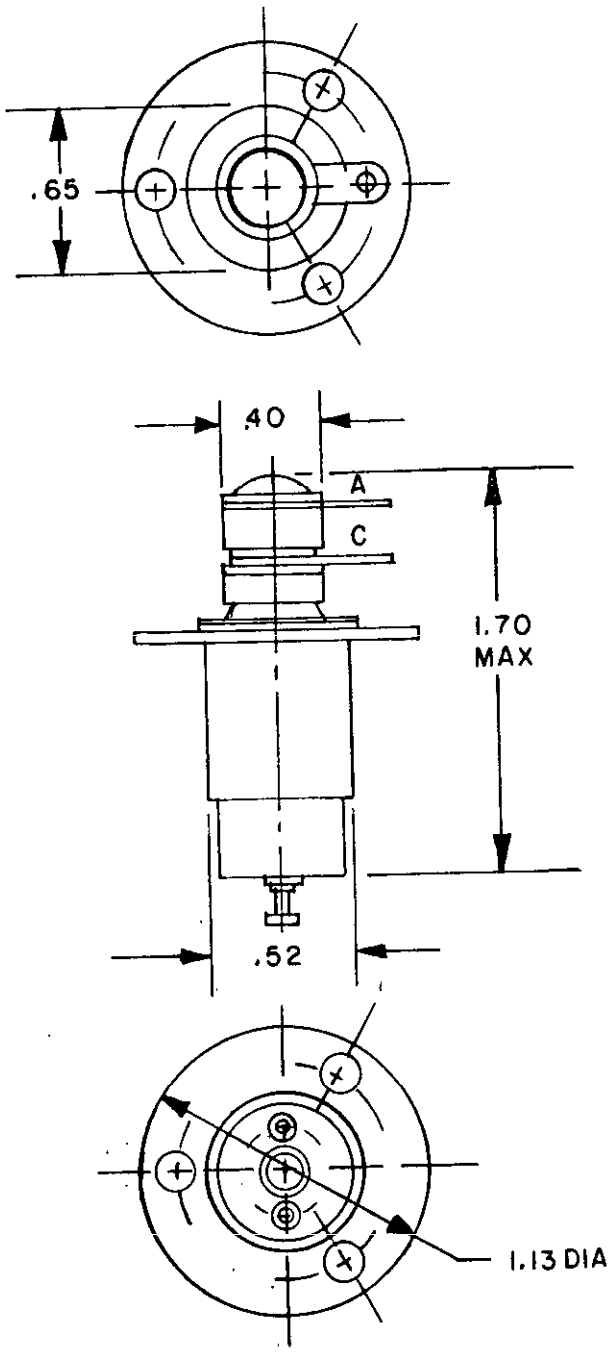

-002 FLANGE MOUNT

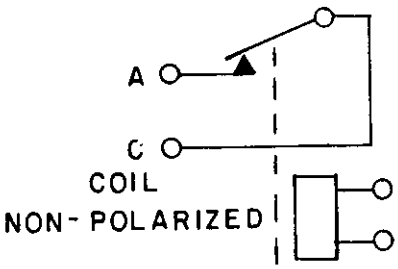

CIRCUIT DIAGRAM

INCHES	MM
.40	10.2
.52	13.2
.65	16.5
1.13	28.7
1.70	43.2

FIGURE 701-7. Relay, vacuum, SPST, N.O., 12 amperes, 3.6 kilovolts (MIL-R-83725/7(USAF).

Downloaded from http://www.everyspec.com

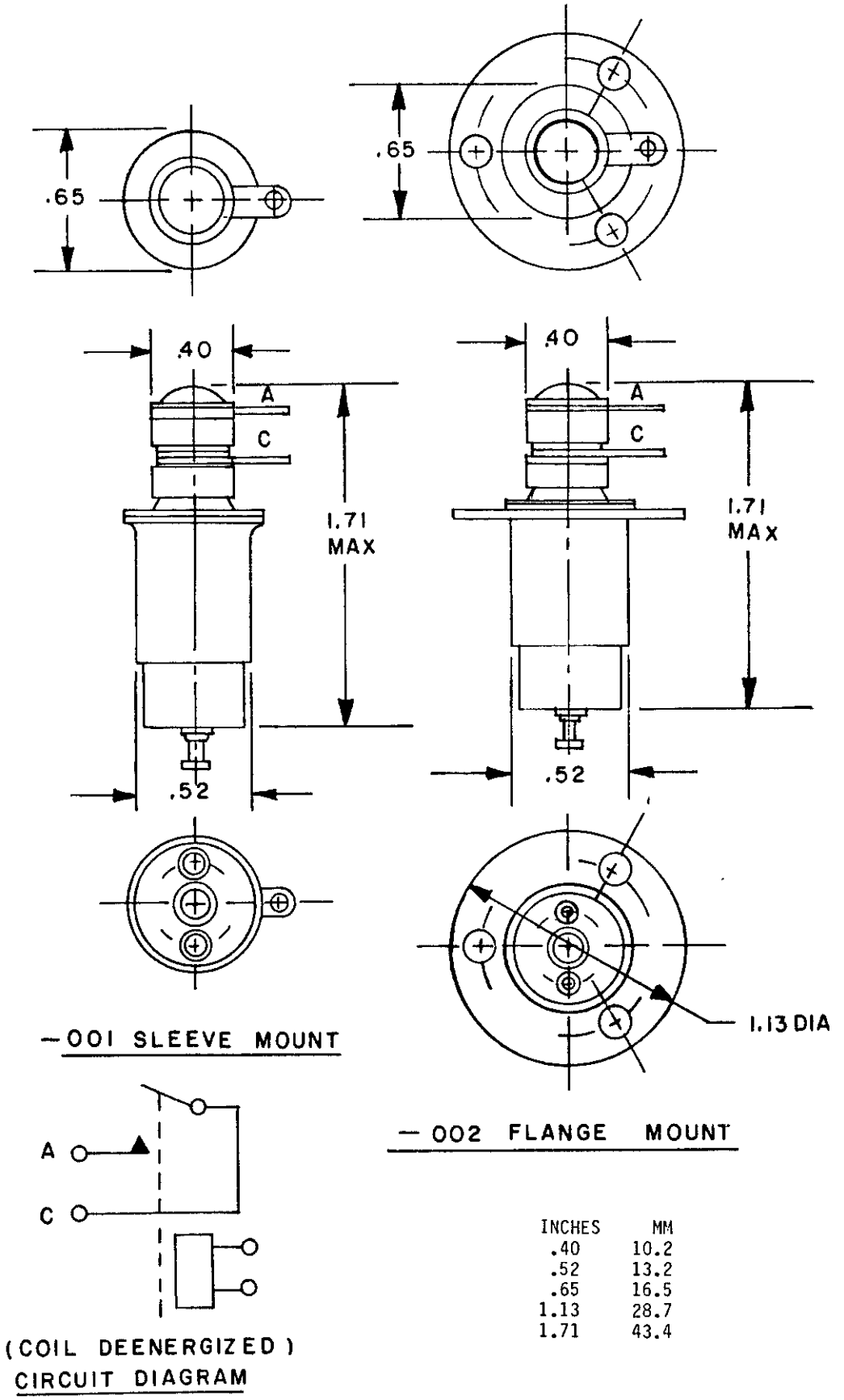

INCHES	MM
.40	10.2
.52	13.2
.65	16.5
1.13	28.7
1.71	43.4

FIGURE 701-8. Relay, vacuum, SPDT, N.O., 12 amperes, 3.6 kilovolts (MIL-R-83725/8(USAF).

Downloaded from http://www.everyspec.com

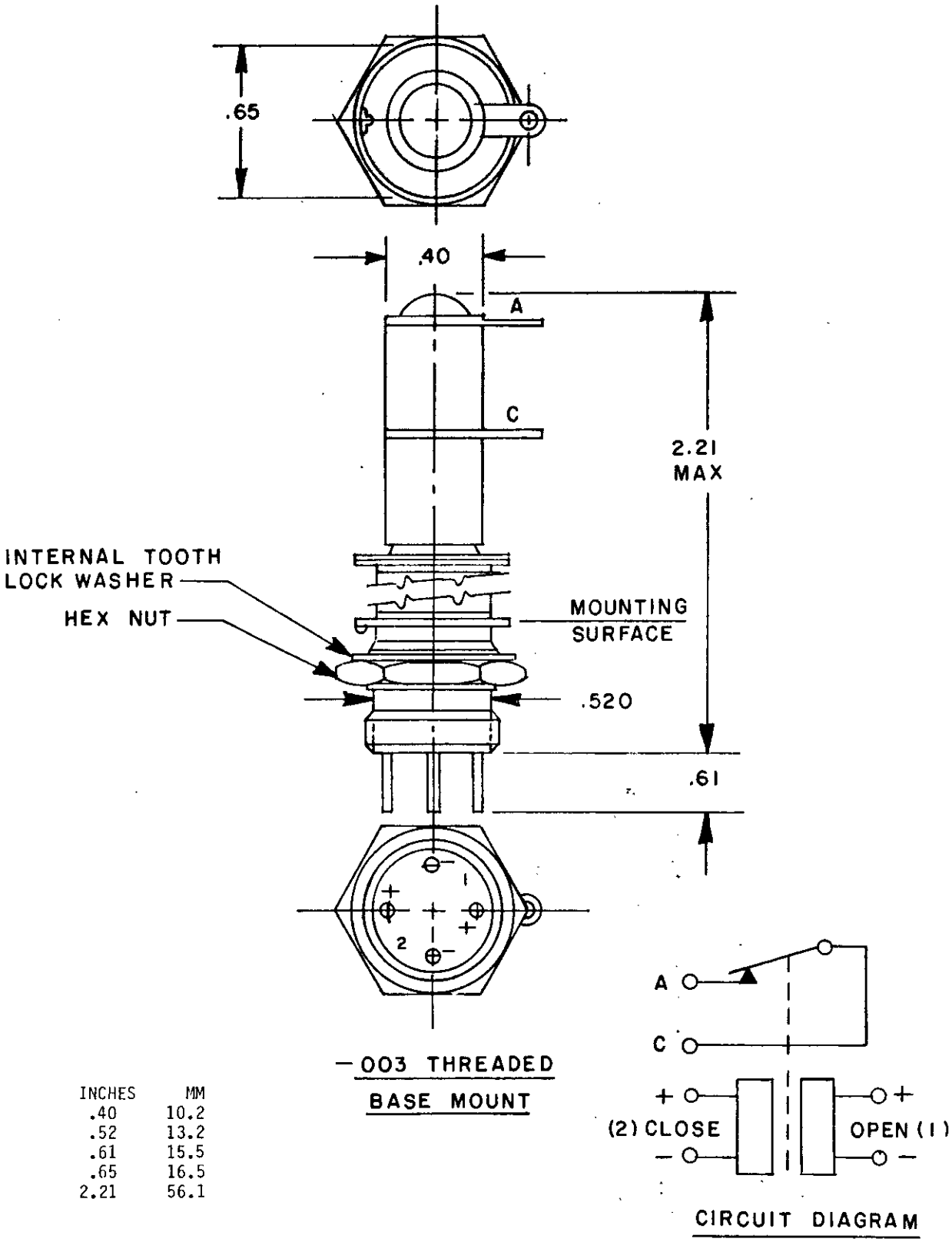

INCHES	MM
.40	10.2
.52	13.2
.61	15.5
.65	16.5
2.21	56.1

FIGURE 701-9. Relay, vacuum, SPST, lock-up, 12 amperes, 7 kilovolts (MIL-P-83725/9(USAF).

Downloaded from http://www.everyspec.com

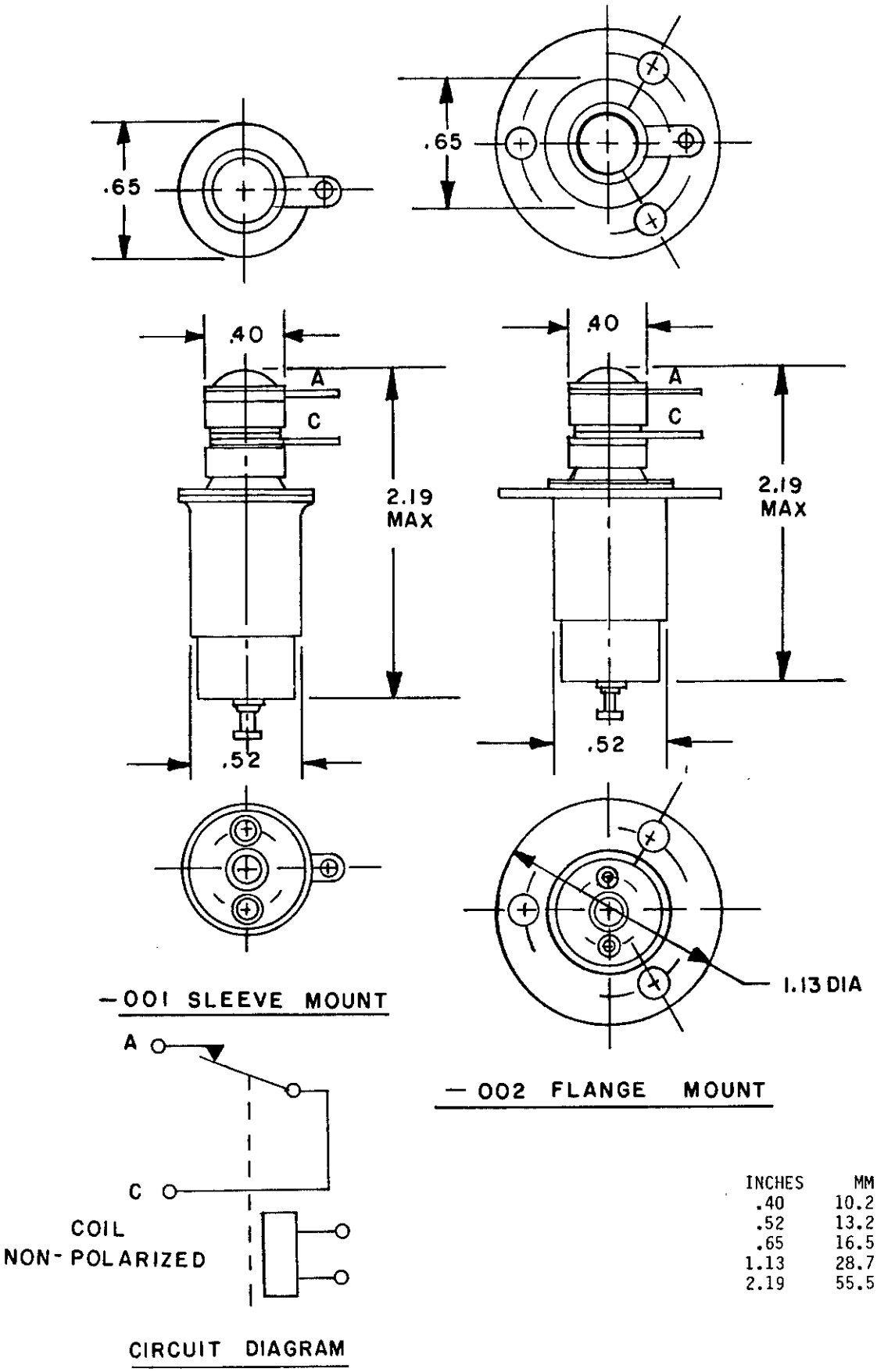

INCHES	MM
.40	10.2
.52	13.2
.65	16.5
1.13	28.7
2.19	55.5

FIGURE 701-10. Relay, vacuum, SPST, N.O., 12 amperes, 10 kilovolts (MIL-R-83725/10(USAF).

Downloaded from http://www.everyspec.com

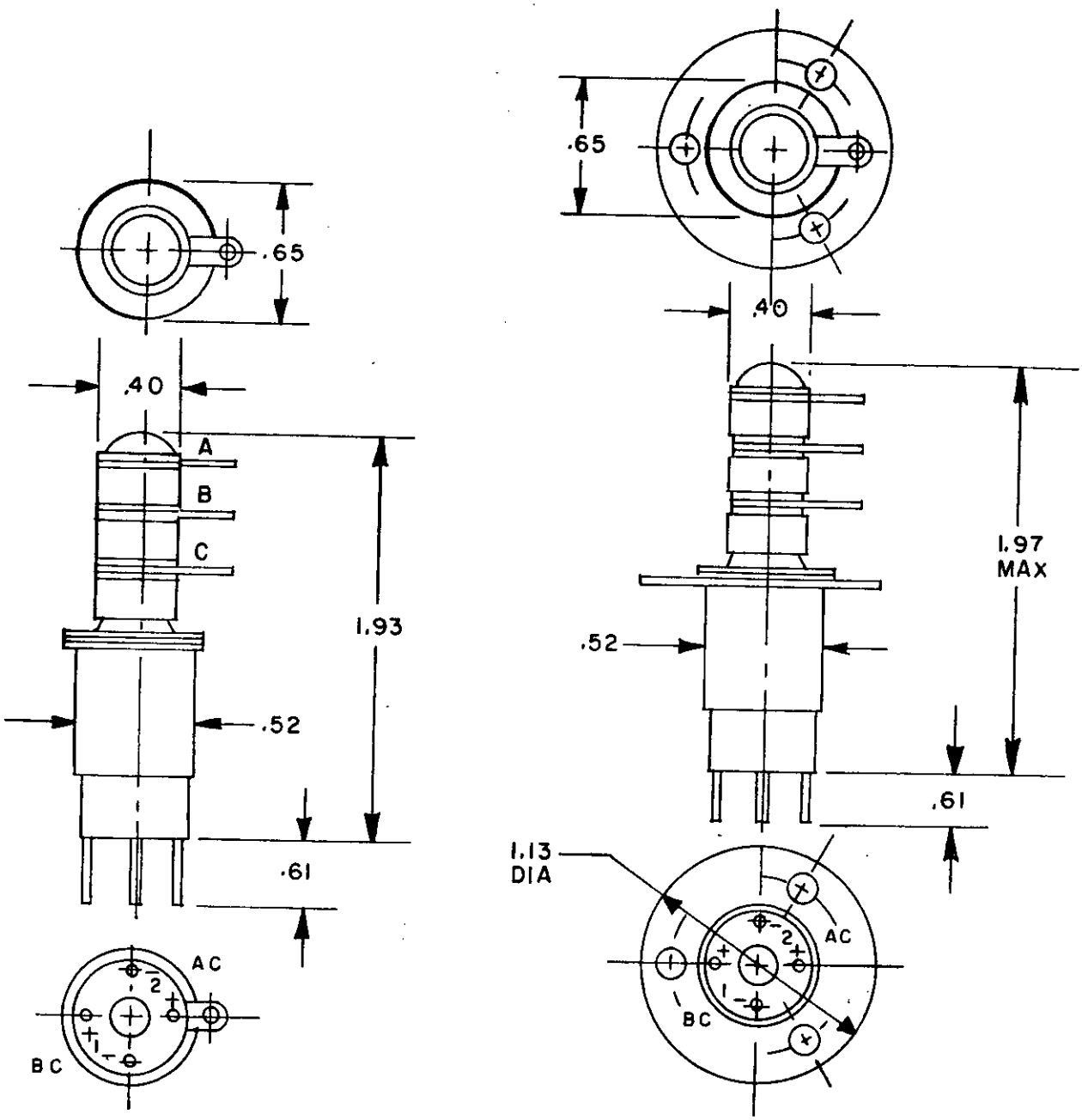

FIGURE 701-11. Relay, vacuum, SPDT, lock-up, 12 amperes, 3.6 kilovolts (MIL-R-83725/11(USAF).

Downloaded from http://www.everyspec.com

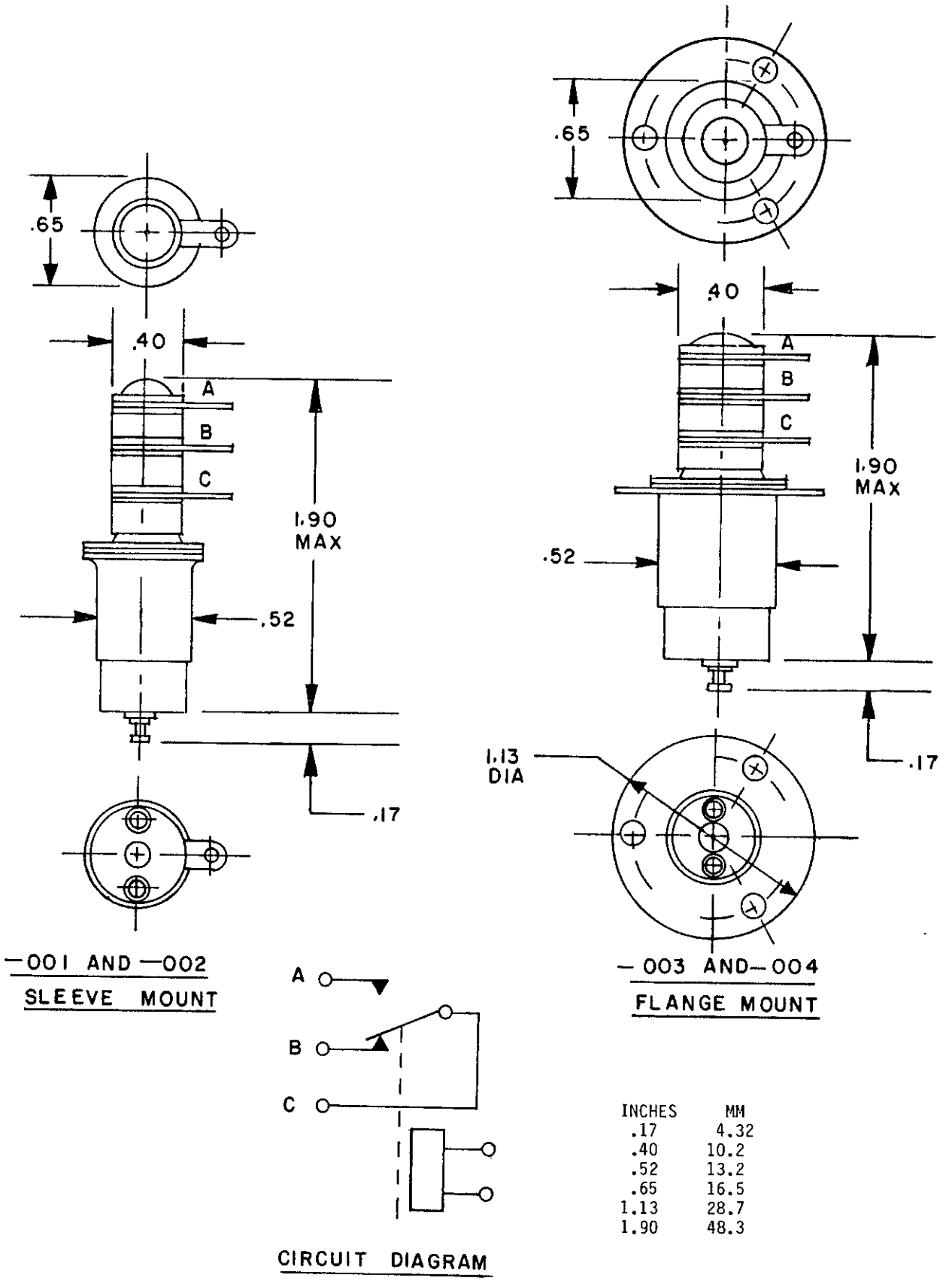

INCHES	MM
.17	4.32
.40	10.2
.52	13.2
.65	16.5
1.13	28.7
1.90	48.3

FIGURE 701-12. Relay, vacuum, SPDT, 12 amperes, 3.6 kilovolts (MIL-R-83725/12(USAF).

Downloaded from http://www.everyspec.com

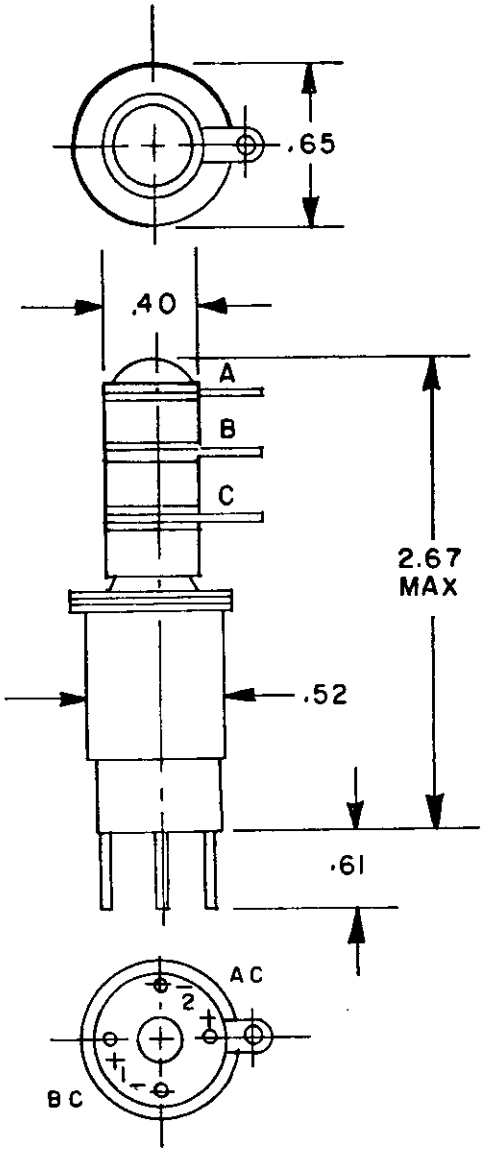

—001 SLEEVE MOUNT

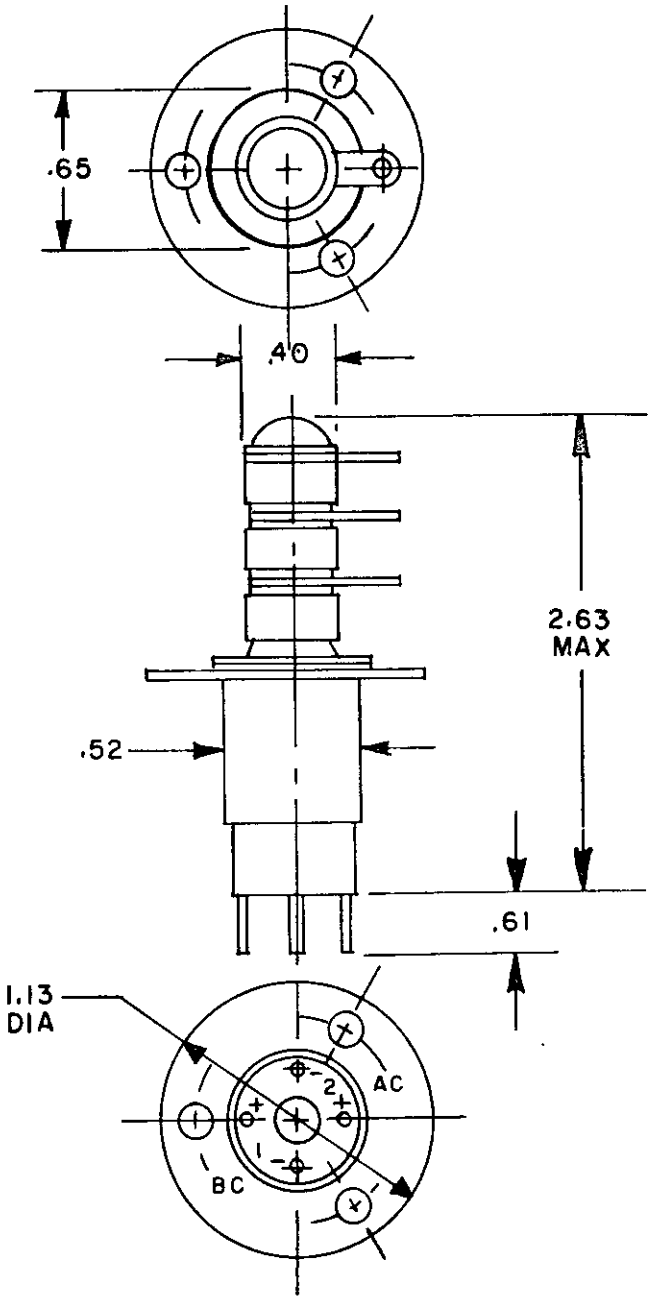

—002 FLANGE MOUNT

FIGURE 701-13. Relay, vacuum, SPDT, lock-up, 12 amperes, 9 kilovolts (MIL-R-83725/13(USAF).

Downloaded from http://www.everyspec.com

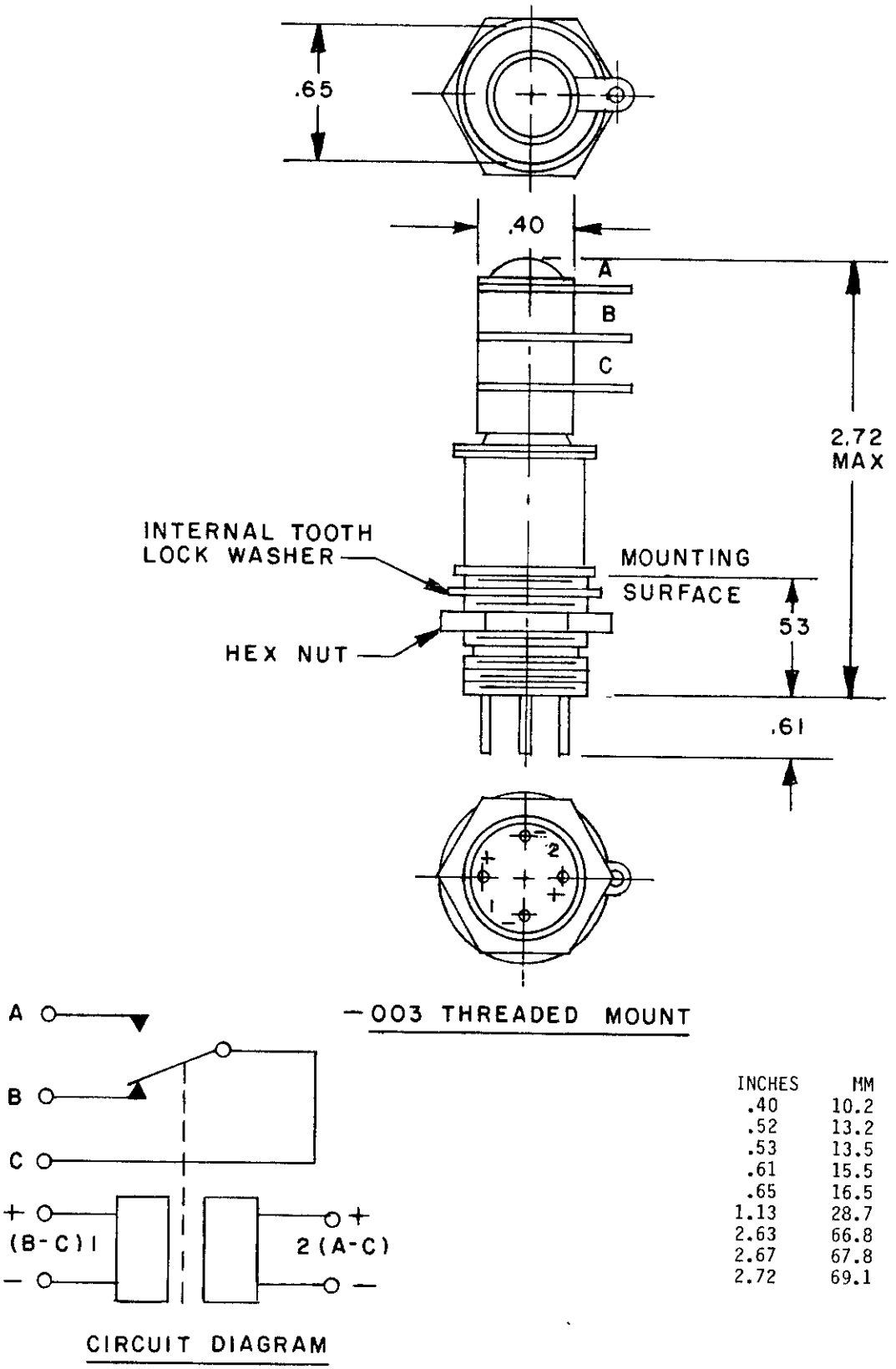

INCHES	MM
.40	10.2
.52	13.2
.53	13.5
.61	15.5
.65	16.5
1.13	28.7
2.63	66.8
2.67	67.8
2.72	69.1

FIGURE 701-13. Relay, SPDT lock-up, 12 amperes, 9 kilovolts (MIL-R-83725/13) - Continued.

Downloaded from http://www.everyspec.com

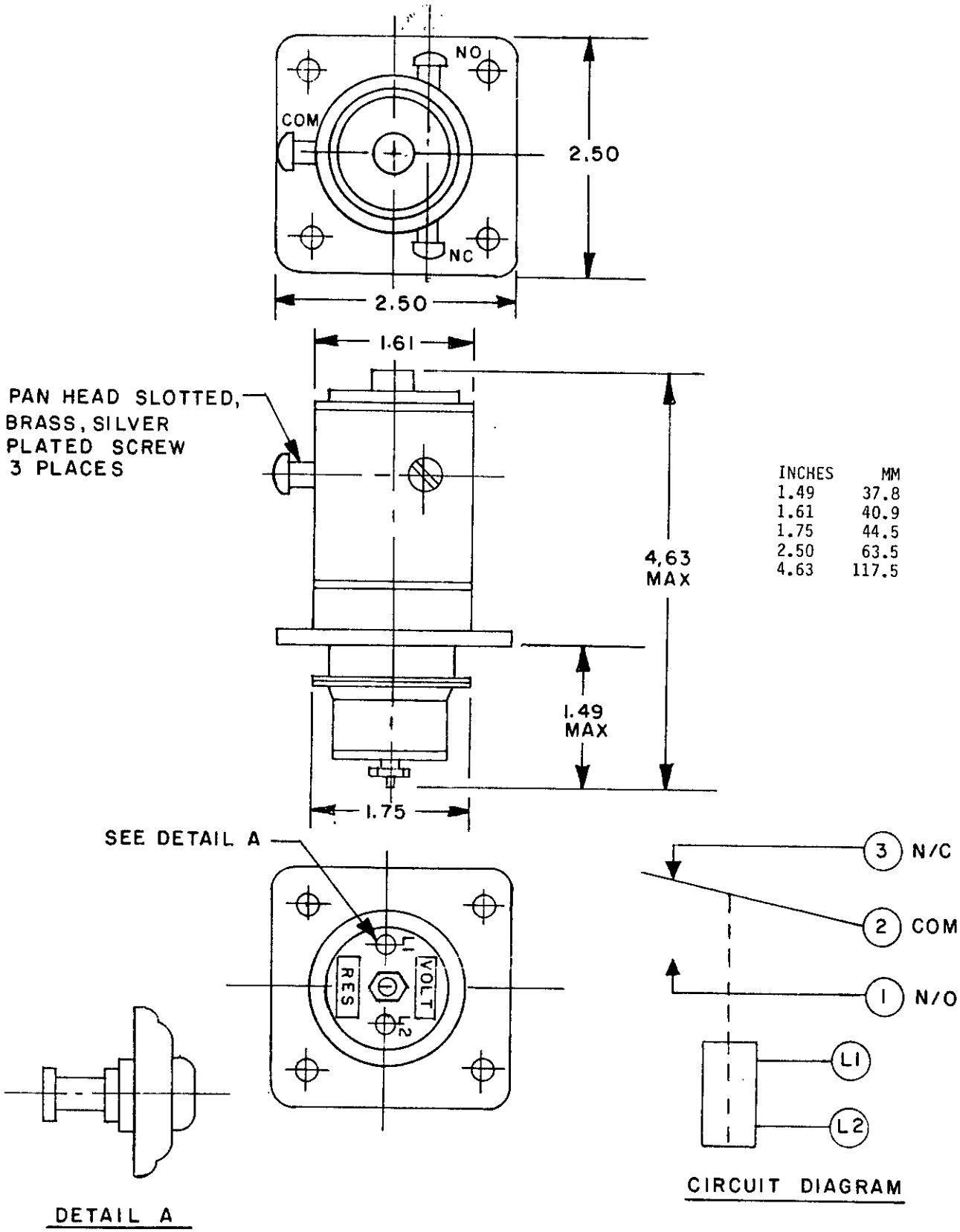

INCHES	MM
1.49	37.8
1.61	40.9
1.75	44.5
2.50	63.5
4.63	117.5

FIGURE 701-15. Relay, vacuum, SPDT, 75 amperes, 15 kilovolts (MIL-R-83725/15(USAF).

Downloaded from http://www.everyspec.com

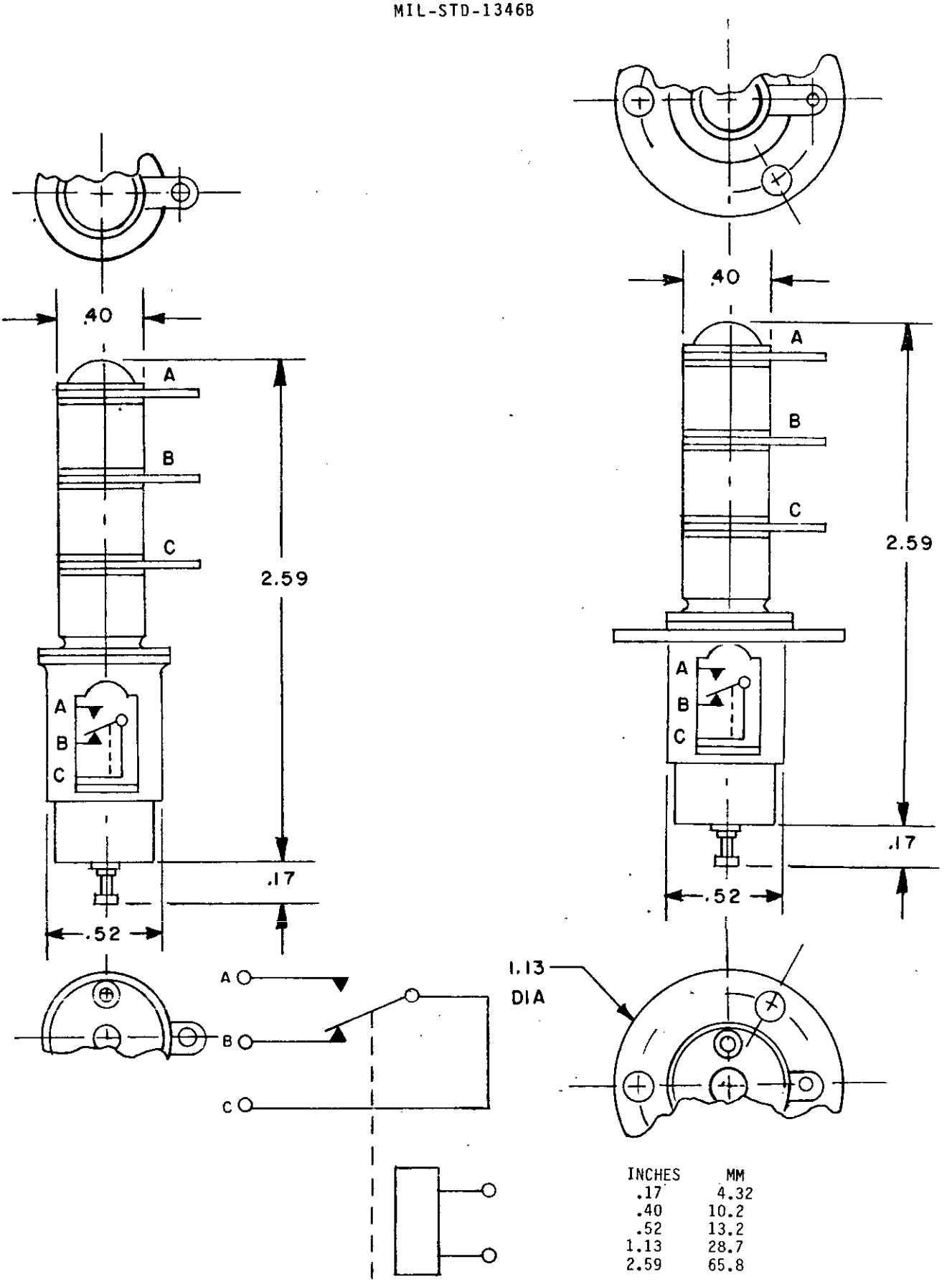

INCHES	MM
.17	4.32
.40	10.2
.52	13.2
1.13	28.7
2.59	65.8

CIRCUIT DIAGRAM

FIGURE 701-16. Relay, vacuum, SPDT, lock-up, 12 amperes dc or 60 hertz RMS, 9 kilovolts or 60 hertz peak (MIL-R-83725/16(USAF).

Downloaded from http://www.everyspec.com

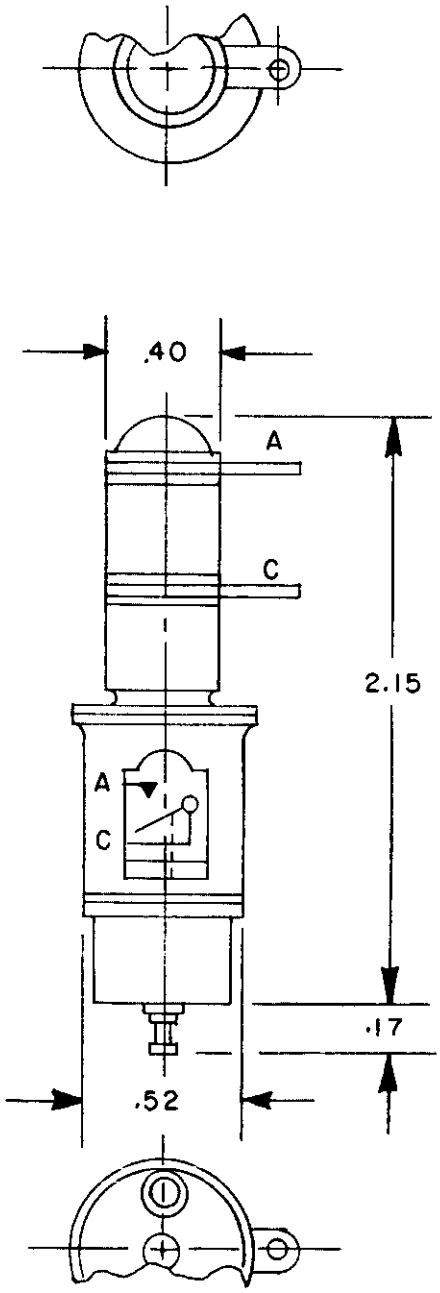

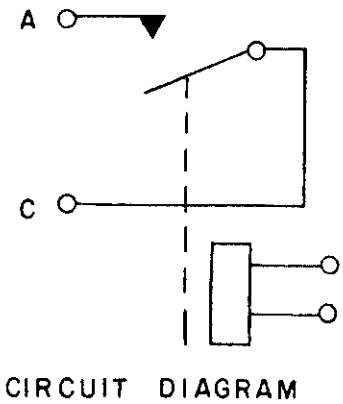

INCHES	MM
.17	4.3
.40	10.2
.52	13.2
2.15	54.6

FIGURE 701-17. Relay, vacuum, SPST, N.O., 12 amperes dc, or 60 hertz RMS, 10 kilovolts peak dc (MIL-R-83725/17(USAF).

Downloaded from http://www.everyspec.com

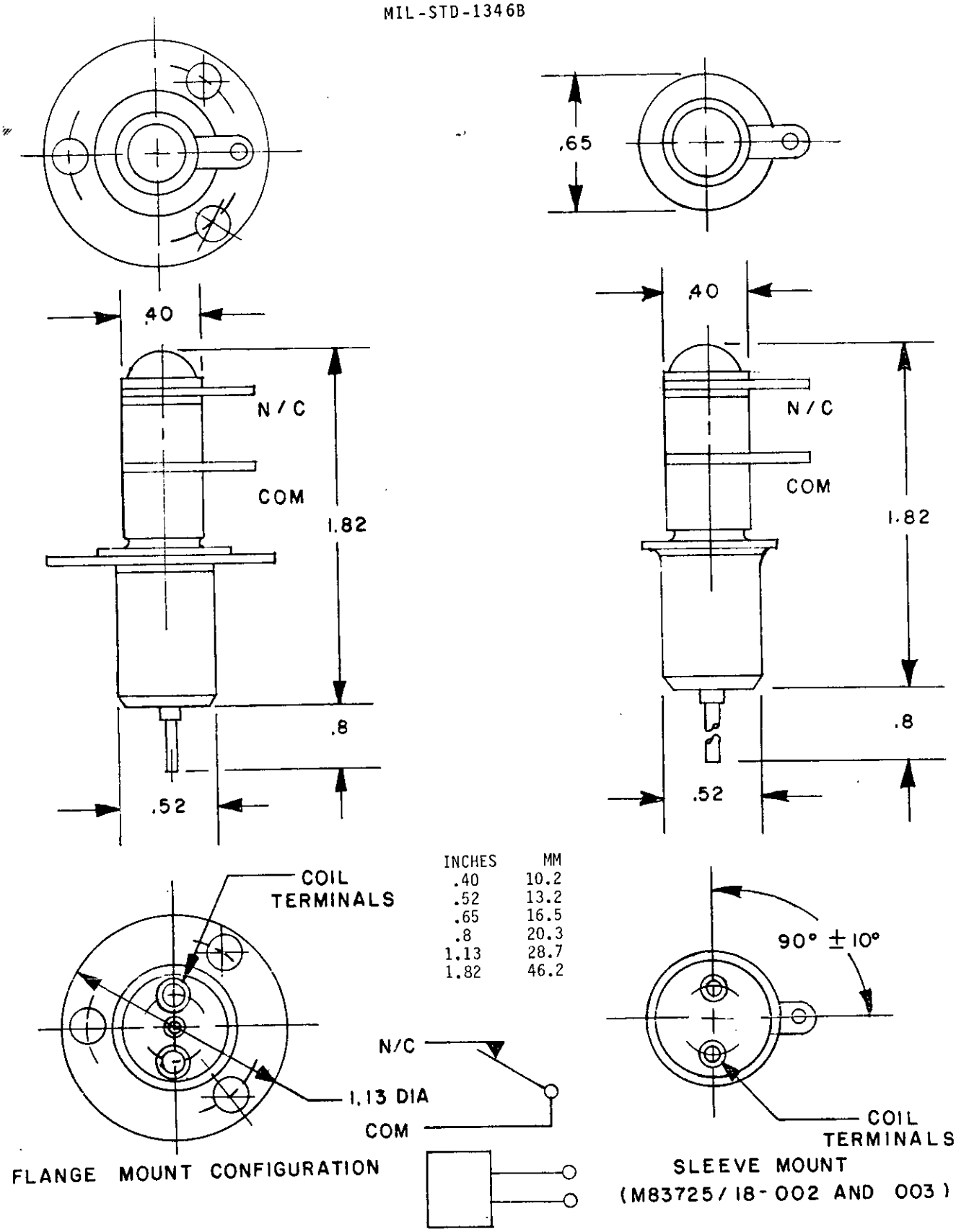

INCHES	MM
.40	10.2
.52	13.2
.65	16.5
.8	20.3
1.13	28.7
1.82	46.2

FIGURE 701-18. Relays, vacuum, SPST, NC, dc, and amperes (MIL-R-83725/18(USAF).