INCH-POUND

MIL-STD-981C
1 July 2010
SUPERSEDING
MIL-STD-981B
31 January 1992

DEPARTMENT OF DEFENSE STANDARD PRACTICE

Design, Manufacturing and Quality Standards for Custom Electromagnetic Devices for Space Applications

AMSC N/A FSC 5950

DISTRIBUTION STATEMENT A. Approved for public release; distribution is unlimited.

FOREWORD

1. This standard is approved for use by all Departments and Agencies of the Department of Defense (DoD).

2. Beneficial comments (recommendations, additions, deletions) and any pertinent data which may be of use in improving this document should be addressed to:

   Defense Supply Center Columbus
   ATTN: DSCC-VAT
   P.O. Box 3990
   Columbus, Ohio 43218

   Since contact information can change, you may want to verify the currency of this address information using the ASSIST Online database at https://assist.daps.dla.mil.

3. This standard is the technical baseline for the design, manufacturing, and quality standards of custom electromagnetic devices. The intent of this standard is to provide uniform requirements for devices that are used in critical space applications and mission-essential ground equipment. This standard also covers devices in noncritical flight and non-mission-essential ground support applications.

CONTENTS

FIGURES

TABLES

APPENDICES

1. SCOPE

1.1 Scope. This standard establishes the requirements for acceptable design, manufacturing, and quality control criteria for custom electromagnetic, open and closed construction, leaded and surface mount devices for space applications.

1.1.1 Intended use of or reference to MIL-STD-981. When this document is referenced or is used as a standard for the design, processing, manufacturing and screening of custom electromagnetic devices for space flight applications, such design, processing, manufacturing, and screening will be in full conformance with all the applicable general and detailed requirements of this standard for the individual device type. Any device meeting only selected provisions of this standard is considered noncompliant.

1.1.2 Compliant electromagnetic devices. Compliant electromagnetic devices will meet without exception all of the applicable requirements and quality standards of MIL-STD-981. Any device that is processed with deviations, omissions, or does not meet the full intent of this standard will not be claimed to be compliant.

1.1.3 Noncompliant electromagnetic devices. Any device that is processed with deviations and is not processed in compliance with the provisions of this standard will not be claimed to be compliant and will not be marked in any manner that would indicate compliance or partial compliance. All applicable documentation (including detail specifications and responses to Request for Quotations invoking MIL-STD-981) will clearly and specifically define the areas of nonconformance and identify each as a deviation. Such deviations will be approved by the acquiring activity.

1.2 Classification.

1.2.1 Families. Table I shows numerical designations that are used in this standard to indicate various device types:

TABLE I. Device types.

Device Type	Family	Applicable Military Specification
Transformer, power	03	MIL-PRF-27
Inductor, power	04	MIL-PRF-27
Transformer, R.F. fixed	11	MIL-T-55631
Transformer, R.F. variable	12	MIL-T-55631
Coil, R.F., fixed	13	MIL-PRF-15305
Coil, R.F., variable	14	MIL-PRF-15305
Inductor, audio	20	MIL-PRF-27
Transformer, audio	21	MIL-PRF-27
Transformer, pulse, low, power	31	MIL-PRF-21038
Transformer, pulse, high, power	36	MIL-PRF-27
Inductor, charging	37	MIL-PRF-27
Transformer, saturable	40	MIL-PRF-27
Inductor, saturable	41	MIL-PRF-27
Coil, R.F., chip, fixed	50	MIL-PRF-83446
Coil, R.F., chip, variable	51	MIL-PRF-83446
Coil, R.F., fixed	52	MIL-PRF-39010

1.2.2 Classes. Two classes of requirements are defined in this standard. Class S parts are intended for critical flight and mission essential ground support applications and any application that is critical to safety. Class B parts are for use in noncritical flight and non-mission essential ground support applications.

2. APPLICABLE DOCUMENTS

2.1 General. The documents listed in this section are specified in sections 3, 4, or 5 of this standard. This section does not include documents cited in other sections of this standard or recommended for additional information or as examples. While every effort has been made to ensure the completeness of this list, document users are cautioned that they must meet all specified requirements of documents cited in sections 3, 4, or 5 of this standard, whether or not they are listed.

2.2 Government documents

2.2.1 Specifications, standards, and handbooks. The following specifications, standards, and handbooks form a part of this document to the extent specified herein. Unless otherwise specified, the issues of these documents are those cited in the solicitation or contract.

SPECIFICATION

DEPARTMENT OF DEFENSE

MIL-PRF-27 - Transformers and Inductors (Audio, Power, and High-Power Pulse), General Specification For
MIL-PRF-15305 - Coils, Fixed and Variable, Radio Frequency, General Specification For.
MIL-PRF-21038 - Transformers, Pulse, Low Power, General Specification For
MIL-PRF-39010 - Coil, Radio Frequency, Fixed, Molded, Established Reliability and Non-established Reliability, General Specification For.
MIL-T-55631 - Transformers, Intermediate Frequency, Radio Frequency and Discriminator, General Specification For.
MIL-PRF-83446 - Coils, Radio Frequency, Chip, Fixed or Variable General Specification For

STANDARDS

DEPARTMENT OF DEFENSE

MIL-STD-202 - Test Methods for Electronic and Electrical Component Parts.
MIL-STD-1285 - Marking of Electrical and Electronic Parts
MIL-STD-1580 - Destructive Physical Analysis for Electronic, Electromagnetic, and Electromechanical Devices

(Copies of these documents are available online at https://assist.daps.dla.mil/quicksearch/ or from the Standardization Document Order Desk, 700 Robbins Avenue, Building 4D, Philadelphia, PA 19111-5094.)

2.3 Non-Government publications. The following documents form a part of this document to the extent specified herein. Unless otherwise specified, the issues of the documents are those cited in the solicitation or contract.

AMERICAN NATIONAL STANDARDS

J-STD-004 - Requirements for Soldering Fluxes.
J-STD-005 - Requirements for Soldering Pastes.
J-STD-006 - Requirements for Electronic Grade Solder Alloys and Fluxed and Non-Fluxed Solder Solders for Electronic Soldering Applications.

(DoD activities may obtain copies of American National Standards from the Standardization Document Order Desk, 700 Robbins Avenue, Building 4D, Philadelphia, PA 19111-5094. The private sector and other Government agencies may purchase copies from the Institute for Interconnecting and Packaging Electronic Circuits (IPC), 7380 N. Lincoln Avenue, Lincolnwood, IL 60646-1776. http://www.ipc.org/).

NATIONAL CONFERENCE OF STANDARDS LABORITORIES (NCSL)

NCSL Z540.3 - Calibration Laboratories and Measuring and Test Equipment - General Requirements.

(Copies of these documents can be obtained online at https://www.ncsli.org or by contacting National Conference of Standards Laboratories, 2995 Wilderness Place, Suite 107, Boulder, CO, 80301-5404.)

AMERICAN NATIONAL STANDARDS INSTITUTE (ANSI)

ANSI/NEMA MW-1000 – Magnet Wire.

ISO 10012 - Quality Assurance Requirements for Measuring Equipment - Part 1: Meterological Confirmation System for Measuring Equipment.

(Copies of these documents can be obtained online at https://www.ansi.org or by contacting American National Standards Institute, 1819 L Street NW, Suite 600, Washington, DC 20036).

AMERICAN SOCIETY FOR TESTING AND MATERIALS (ASTM)

ASTM-E-595 - Standard Test Method for Total Mass Loss and Collected Volatile Condensable Material from Outgassing in a Vacuum Environment.
ASTM-D-2240 - Standard Test Method for Rubber Property-Durometer Hardness

(Application for copies should be addressed to the American Society for Testing and Materials (ASTM), 100 Barr Harbor Drive, West Conshohocken, PA 19428-2959 or http://www.astm.org/

NATIONAL AERONAUTICS AND SPACE ADMINISTRATION (NASA)

NASA-STD-8739.3 - Workmanship Standard for Soldered Electrical Connections.
NASA-STD-8739.4 - Crimping, Interconnecting Cables Harness, and Wiring.

(Copies of these documents are available online at http://standards.nasa.gov/documents/nasa

STANFORD APPLIED ENGINEERING (SAE) INTERNATIONAL

SAE-AS22759 - Wire, Electrical, Fluoropolymer-Insulated, Copper or Copper Alloy

(Copies of these documents are available online at https://www.sae.org/ or from SAE World Headquarters, 400 Commonwealth Drive, Warrendale PA 15096-0001.)

(Non-Government standards and other publications are normally available from the organizations that prepare or distribute the documents. These documents also may be available in or through libraries or other informational services.)

2.4 Order of precedence. In the event of a conflict between the text of this specification and the references cited herein, the text of this specification takes precedence. Nothing in this document, however, supersedes applicable laws and regulations unless a specific exemption has been obtained.

3. DEFINITIONS

3.1 Definitions. The meaning of terms used in this standard are in accordance with MIL-PRF-27, MIL-PRF-15305, MIL-PRF-21038, MIL-T-55631, MIL-PRF-83446, and MIL-PRF-39010.

4. GENERAL REQUIREMENTS

4.1 Procurement documents. Electromagnetic devices shall meet the requirements specified herein and in the applicable procurement document on the individual part type. Procurement documents will be provided by the procuring activity or, when specified by the procuring activity, prepared by the contractor and submitted to the procuring activity for approval. In the event of conflict between this standard and the procurement document, the latter shall govern.

4.2 Power transformers, power inductors, audio transformers, audio inductors, high power pulse transformers, charging inductors, saturable transformers and saturable inductors (families 03, 04, 20, 21, 36, 37, 40, and 41 respectively). These devices shall meet the applicable requirements of MIL-PRF-27, Product Level T, or Product Level M, for Grades 4, 5 or 6 and classes Q, R, S, V, T, or U devices and as specified herein.

4.3. Radio frequency, fixed and variable transformers (families 11 and 12 respectively). These devices shall meet the applicable requirements of MIL-T-55631 for Grade 1, class A or B devices and as specified herein.

4.4 Radio frequency, fixed and variable coils (families 13 and 14, respectively). These devices shall meet the applicable requirements of MIL-PRF-15305 for Grade 1, class A or B devices and as specified herein.

4.5 Low power pulse transformers (family 31). These devices shall meet the applicable requirements of MIL-PRF-21038, Product Level T, or Product Level M, and as specified herein.

4.6 Radio frequency, chip, fixed and variable coils (families 50 and 51, respectively). These devices shall meet the applicable requirements of MIL-PRF-83446 and as specified herein.

4.7 Radio frequency, molded, fixed, established reliability, coils (family 52). These devices shall meet the applicable requirements of MIL-PRF-39010 and as specified herein.

5. DETAILED REQUIREMENTS

5.1 Materials.

5.1.1 Outgassing. Materials used in nonhermetic sealed devices for spaceflight application must not exceed a maximum total mass loss (TML) of 1.0 percent and maximum collected volatile condensable material (CVCM) of 0.1 percent when tested in accordance with ASTM-E-595. (See 6.2)

5.1.2 Hydrolytic stability. When requested by the acquiring activity: hydrolytic stability of any polymeric materials used must be verified by test data. In the absence of hard data, samples of any polymeric material used shall be cast into blocks approximately 2 inches square by 1/2 inch thick. The shore hardness shall be measured in accordance with ASTM-D-2240. The samples shall be exposed to an atmosphere of 71°C, 95 percent relative humidity for 1000 hours. The shore hardness shall again be measured and samples examined for liquid reversion. Materials shall show no visible reversion to the liquid state and any decrease in hardness shall not exceed 30 percent.

5.1.3 Tapes, films and insulating materials. Insulating materials or combinations of insulating materials shall have a minimum RMS dielectric strength of at least twice the maximum peak operating voltage to be induced between coil winding layers, or twice the RMS dielectric withstanding voltage to be applied between the coil winding and ground, or twice the dielectric withstanding voltage to be applied between the coil winding and other coil windings to be insulated from it. These requirements shall be met at the maximum operating temperature. Devices with materials stresses greater than 100 volts/mil due to the maximum operating voltage shall be tested for corona discharge in accordance with MIL-PRF-27.

5.1.4 Wire.

5.1.4.1 Magnet wire. Magnet wire shall conform to and be of the types and sizes specified in MW-1000 and shall be of the appropriate class for the maximum temperature within the winding. Magnet wire used for coil winding shall conform to the size limits of Table II as absolute limits. Temperature rise limits must also be observed in selecting wire sizes. Procuring activity approval shall be required when other types and sizes of magnet wire are used.

TABLE II. Wire Limitations for Magnet Wire (see 5.1.4.1).

Family	Minimum Wire Size 1/ (AWG)	
	Class S	Class B
03, 04, 36, 37, 40, and 41	38	44
11, 12, 13, 14, 20, 21, 31, 50, 51 and 52	44	50

1/ Procuring activity approval shall be required when other sizes of magnet wire are used.

5.1.4.2 Insulated wire. When insulated wire is used as wire terminals, the wire shall be of the types and sizes covered in SAE-AS22759. Wire size shall conform to the limits of Table III. Procuring activity approval shall be required when other types and sizes of insulated wire are used as terminals.

5.1.4.3 Termination limitations. Internal wire leads shall be attached to the coils and other internal components and terminals or case by soldering (see 5.5.10), welding, brazing, crimping or other method in such a manner as to provide adequate electrical connection and mechanical strength. However, devices with smaller diameter gauge than AWG 36, the wire shall be terminated within the device and a wire larger than AWG 36 shall be used to connect to the terminal. Twisting smaller gauge wires (such as AWG 36) and soldering to form a larger lead may fulfill the requirements for terminating with larger wires. Where soft solder is used to provide the electrical connection, wire leads shall be anchored mechanically. Wire sizes shall conform to the limits of Table III. Terminations shall be such that adequate stress relief is provided for all leads. Procuring activity approval shall be required when other terminations are used.

TABLE III. Termination Limitations (see 5.1.4.3).

Type of Termination	Minimum Terminal/Self Lead Wire Size (AWG)	
	Class S	Class B
Interconnected Lead	29	32
External terminal/self lead 1/	26	28

1/ Spliced internal lead diameter ratios shall not exceed 5 to 1 for magnet wire sizes larger than #44.

5.1.5 Solder and soldering flux. Solder, when used, shall be in accordance with J-STD-005, and J-STD-006, except that pure tin shall not be used. Soldering flux shall be in accordance with J-STD-004, Type L0 or L1 for class B and S.

5.1.5.1 Internal Solders. To prevent internal solder reflow, devices shall utilize higher solder melt temperatures than assembly reflow. Internal solder shall have a minimum melt temperature of 260˚C.

5.1.6 Screws, nuts, and washers. All mounting and terminal screws, nuts, and washers shall be protected against corrosion. Cadmium, Zinc, or Tin-plating shall not be used on any surface exposed to space environment. All materials shall be compatible and not support galvanic corrosion or tin whisker growth.

5.1.7 Recycled and recovered material. Under no circumstances should recycled or recovered materials be used in space level devices, unless specifically approved by the acquiring activity.

5.2 Internal elements. Packaged or unpackaged parts (other than the wound magnetic elements) used within these devices shall be approved by the acquiring activity. The request for approval must justify the need for the part and provide sufficient data to substantiate the suitability of the part in the application. Procurement documentation for the part shall be submitted to the procuring activity for approval.

5.3 Radiographic inspection (when applicable). Devices shall be inspected in accordance with Appendix B.

5.3.1 Real time x-ray analysis. Real-time x-ray with images (provided as part of the data package) shall be performed with a view of overall construction and two side views of each individual device. Images shall be provided in digital media format. Devices shall be carefully analyzed for winding, core, termination and with close-up views of any anomalous conditions. Devices shall meet the workmanship and x-ray criteria specified herein for class S parts. 2 views minimum and the 3rd view when applicable.

5.4 Marking. Devices shall be marked as specified in the procurement document on the part in accordance with Appendix I of MIL-STD-1285. When space provides, the marking as a minimum shall include the procurement document number, manufacturer's part number and CAGE, trademark or symbol, terminal identification, and lot date code.

5.5 Manufacturing Practices. The contractor shall provide to the procuring activity for review and approval a copy of the contractor's written procedures covering manufacturing practices. Proprietary documents shall be reviewed, approved and maintained at the manufacturer's facility. These procedures shall, as a minimum, conform to the requirements specified herein. Any change from the approved procedures shall require approval of the procuring activity in writing. The contractor may, at his option, provide separate sets of procedures for Class S and Class B.

5.5.1 Clean handling. Operators shall have clean hands (free from handcream, etc.) while handling these devices. The use of clean, lint-free gloves or finger cot is recommended whenever practical. Magnet wire spools shall be handled by the rim of the spools only. Materials and piece parts stored, or being transferred to or between work stations shall be kept in covered containers to maintain a dust-free seal.

5.5.1.1 Solvents. Crazing of magnet wire may occur as a result of uncontrolled exposure to solvents such as water or alcohol. The use of alcohol or alcohol based cleaning agents for the cleaning of magnet wire or assemblies shall be controlled and properly documented.

5.5.2 Work areas. Work and inspection areas must be cleared of all foreign materials before parts or materials for these devices are placed thereon. While working on these devices, the work areas shall not be used to store any parts, materials, or devices used on any other devices.

5.5.3 Foreign material. Care must be exercised to prevent introduction of foreign materials into the component. At each in-process inspection, the operator shall examine the device under 10X to 30X magnification to assure that no foreign materials are present. Special attention should be given to loose wire-ends, solder splashes, wire scrapings, or residues.

5.5.4 Tools. Except for cutting pliers, the tools used shall not be capable of cutting, nicking, or damaging the wire insulation in any manner. All tools used in the handling of magnet wire shall be free of sharp or rough surfaces or edges. This may be accomplished by the application of an epoxy or by filing any of the sharp surfaces or edges.

5.5.5 Carriers. Wound cores, coils or bobbins shall not be carried or stored on pegboards using nails or other sharp pegs that may cause damage to wire insulation. All sharp or abrasive pegs shall be sufficiently covered to insure against damaging wire. The carriers shall be covered with a material that will prevent contamination by foreign materials during transport and storage.

5.5.6 Damaged material. Material that exhibits evidence of damage shall not be used in the fabrication of the devices.

5.5.7 Travelers. A lot traveler specifying each operation in the proper sequence shall be provided with each lot. Initialing or stamping of the individual traveler by the operator or inspector prior to moving to the next work station shall be required for each operation in the manufacturing process.

5.5.8 In-process inspection. All critical in-process operations used in the manufacturing of these devices shall be inspected by an adequately trained inspector. If circumstances preclude inspections after the process is complete, the inspection shall occur during the process. These inspection stations shall be defined in the manufacturing process.

5.5.8.1 Pre-cap visual inspection. A pre-cap visual inspection shall be performed on all devices immediately prior to potting or encapsulation. The visual inspection, utilizing 10X minimum to 30X maximum magnification, shall be performed to ensure that the devices have been fabricated in accordance with good manufacturing practices and meet the requirements specified. Devices that fail to meet these requirements shall be removed from the lot and shall not be shipped.

5.5.8.1.1 In process color images. If DPA, per MIL-STD-1580 is required, then the 4 stage color photographs may be substituted with consent from the acquiring activity. Color images shall be taken on a random sample of five parts per lot (or quantity specified on the contract or purchase order) during pre-cap inspection when solder joints/splices are still visible. Pre-cap images shall consist of the following:

a. One overall image of the part, using enough magnification so that the part fills the frame.
b. Close up images of each visible solder joint, using a minimum of 10X magnification. Images may contain more than one solder joint.
c. A minimum of six images per device shall also be taken at 10X minimum magnification, one in each orthographic plane, plus a sufficient number of views to assure that the devices are consistent with high-reliability construction and workmanship. For cylindrical objects (coils), a minimum of four images shall also be taken at 10X magnification, one end image plus three full length view images (0˚, 90˚ rotated, and 180˚ rotated), to assure that the devices are consistent with high-reliability construction and workmanship.

Images shall be identified with the contract or purchase order number.

5.5.9 Coil windings.

5.5.9.1 Tension. A suitable device shall be used to provide near uniform tension during the machine winding process of any coil of wire size AWG 18 or smaller diameter. For coils wound on square forms, special provision must be made to prevent excessive tension on the corners. This device and the winding machine used shall be inspected for proper operation a minimum of twice daily or once each lot whichever is more frequent. Tension control on larger wire is preferred but not mandatory. For machines which cannot accommodate any tension device, other criteria shall be established. Any portion of the device which contacts the magnet wire (pulleys, sliders, etc) shall be free of nicks, burrs, rough spots, or any other anomalies that could cause damage to the coil wire.

5.5.9.2 Wire breaks. There shall be no wire breaks for any winding within the coil. The winding operation can be considered complete only when the coil has been made with an unbroken winding. Should the magnet wire break during winding operations, the magnet wire may be unwound and rewound. In no case may a broken coil wire be repaired. If magnet wire opens after assembly, the entire device shall be rejected. Those devices that are designed as multi-series connected windings are not to be identified as wire breaks within the definition of this paragraph.

5.5.9.3 Crossed wires. Winding shall be even and smooth. In insulated interleaved layer-wound coils, no uninsulated turns shall cross over other turns. In toroidal and cylindrical or random wound bobbin coils wound in segments, there shall be no uninsulated cross-over of any one turn to the adjacent winding segment. All situations where voltage stress exceeds the ability of the magnet wire insulation to withstand it shall be avoided. Family 13, 14, 50, 51 and 52 RF coils are often wound in a multilayer, progressive, or single pass (linear) wind pattern in order to achieve high Q and high SRF. These winding patterns shall not be interpreted as “crossed wires”.

5.5.9.4 Kinks, nicks, and damaged insulation. The winding process shall not introduce any kinks, nicks, and insulation damage.

5.5.9.5 Tapes. The use of pressure sensitive adhesive tapes shall be kept to a minimum. The adhesive system must meet the outgassing requirements of 5.1.1.

5.5.9.6 Terminations. The recommended method to anchor the lead is shown in Figures 1 and 2. The lead anchor shall be performed with minimum use of tape wrap to keep outgassing low. (See 5.5.9.5.)

5.5.9.7 Magnet wire to terminal post connections. Recommended magnet wire (wire or coil) to terminal post connections are depicted in Figure 3 a-h, j, k, m, n, and p. For high voltage, corona-free connections, no protruding wires are allowed and balling of the joint is recommended. Care shall be exercised when using the heat shrink tubing to avoid the concentration of heat at the solder joint. Heat shall be controlled in accordance with manufacturer's stated recommended conditions.

5.5.9.8 Antirotation feature. Each terminal lead shall be internally constructed as illustrated on Figure 4 or equivalent. Flattened or dimpled area thickness shall be no less than one-half the lead diameter and shall not exhibit sharp edges. The radius, R, shall be no greater than twice or less than one times the diameter of the terminal lead. This radius shall be formed prior to soldering. The antirotation feature shall be completely contained within the magnetic device package. Antirotation is not applicable to all axial leaded parts listed for Families 04, 13, 14, 50, 51 and 52.

5.5.9.9 Terminal twist. Finished devices with solid wire terminals shall meet the terminal twist test in accordance with MIL-STD-202, method 211, test condition D without causing discontinuity in the winding. When the bending of the terminal leads, as specified in MIL-STD-202, is impractical, the device shall be held stationary. The lead shall be clamped in a hand chuck and the chuck rotated as required. During the twist test, the winding shall be monitored for open circuit with equipment able to detect dropouts of 100 microseconds or less.

5.5.9.10 Toroidal winders. Shuttle rings and sliders must be inspected for nicks, burrs and rough spots. Inspect the toroid for physical damage after removal from the shuttle.

5.5.9.11 De-reeling. De-reeling (de-spooling) devices shall be such that they do not cause variations in tension beyond the control of the tension device (see 5.5.9.1). All portions of the device which contact the magnet wire (pulleys, sliders, spool flange, etc) shall be free of nicks, burrs, and rough spots.

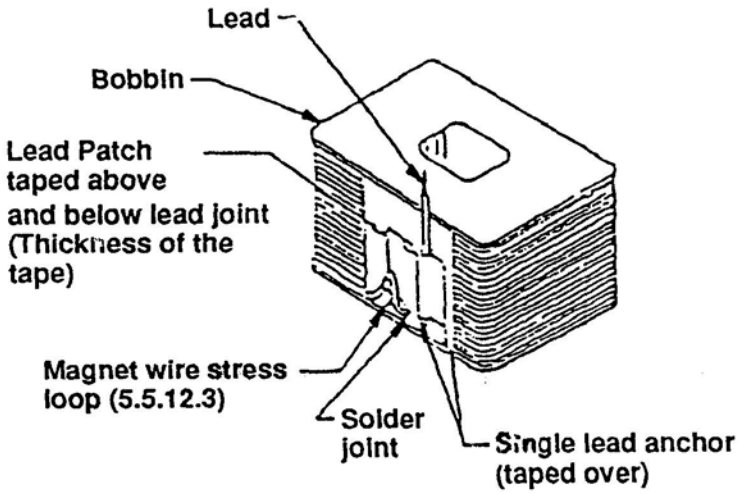

Note: The recommended method to anchor the lead is shown. The lead anchor should be performed with minimum use of tape wrap to keep the outgassing low.

FIGURE 1. Recommended bobbin coil termination anchoring (see 5.5.9.6).

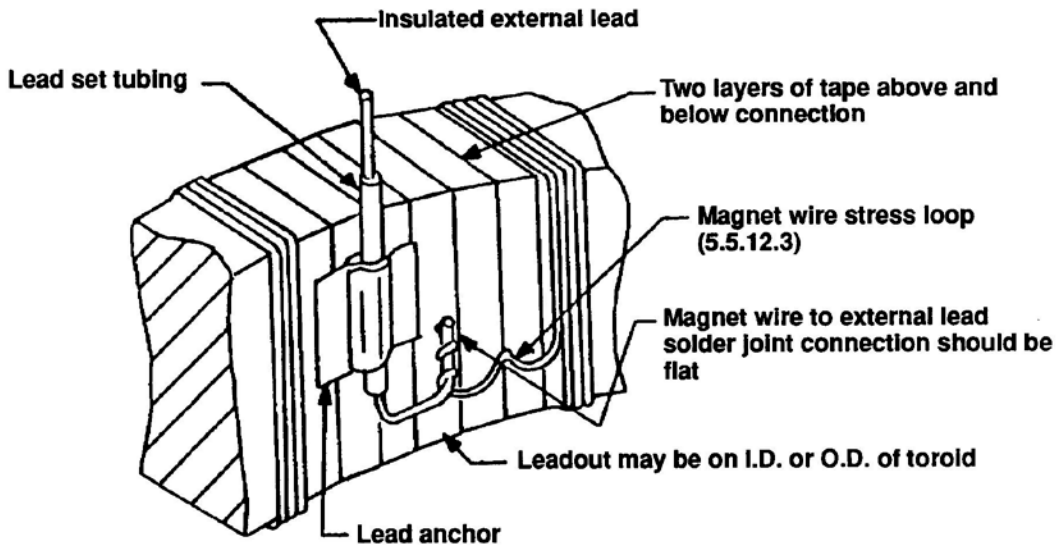

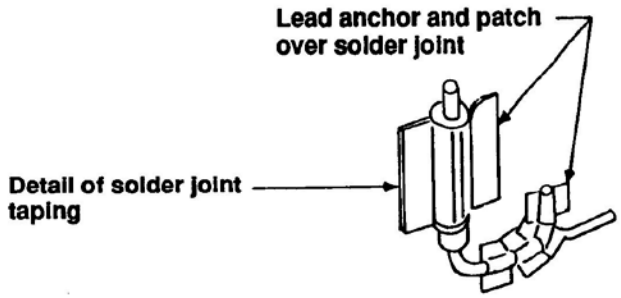

Note: The recommended method to anchor the lead is shown. The lead anchor should be performed with minimum use of tape wrap to keep the outgassing low.

FIGURE 2. A recommended toroidal coil termination anchoring (see 5.5.9.6).

(a) **Not acceptable (overlapping)**

(b) **Preferred (Secure, evenly spaced wraps)**

(c) **Acceptable (Secure wraps)**

NOTE: There shall be a minimum of three (3) full wraps of wire on each lead terminal. Wires shall be mechanically secured prior to soldering. In no case shall wires be overlapped onto each other.

(d) **Acceptable**

NOTE: For magnet wires of AWG number 42 and smaller, four (4) wraps evenly distributed on terminal lead over 0.1 inch length maximum, with stress relief wraps not counted, are acceptable.

FIGURE 3 (1 of 4). Recommended magnet wire-to-post termination (see 5.5.9.7).

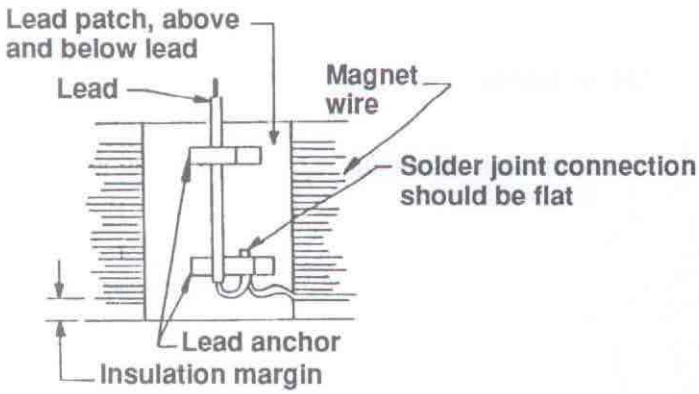

(e) Internal view

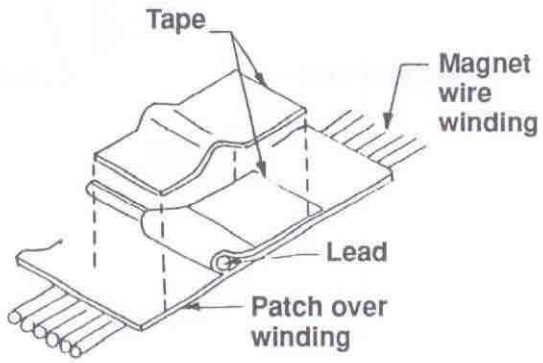

(f) Lead anchor

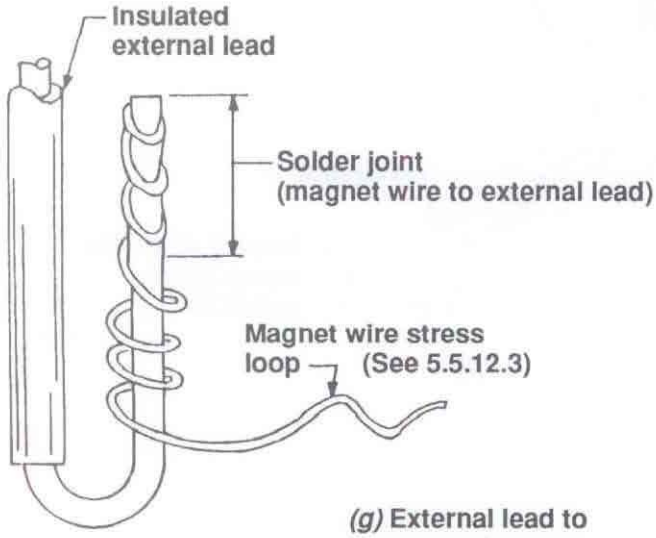

(g) External lead to magnet wire joint

FIGURE 3 (2 of 4). Recommended magnet wire-to-post termination (see 5.5.9.7).

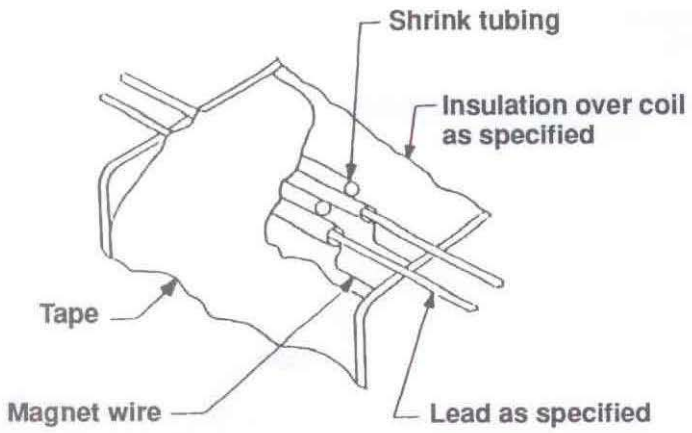

(h)

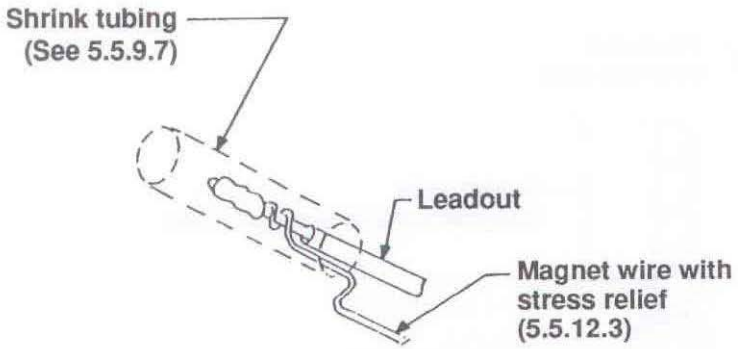

(J)

FIGURE 3 (3 of 4). Recommended magnet wire-to-post termination (see 5.5.9.7).

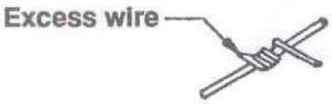

(k) Not acceptable

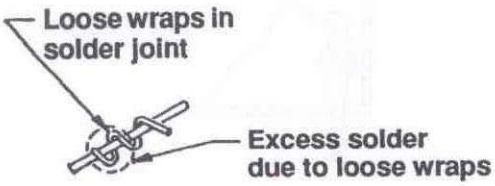

(m) Not acceptable

Note: There shall be no evidence of wire "pigtails" protruding more than 2 wire diameters from a wrapped terminal, nor shall there be loose wraps secured by excess solder.

(n) Sleeving - acceptable on AWG 18 or smaller diameter wire. Crimp necessary.

(p) "Third wire" - acceptable on AWG 18 through AWG 30 wire. Third wire must be uninsulated.

Note: Other acceptable termination methods shall exhibit adequate mechanical strength prior to soldering.

FIGURE 3 (4 of 4). Recommended magnet wire-to-post termination (see 5.5.9.7).

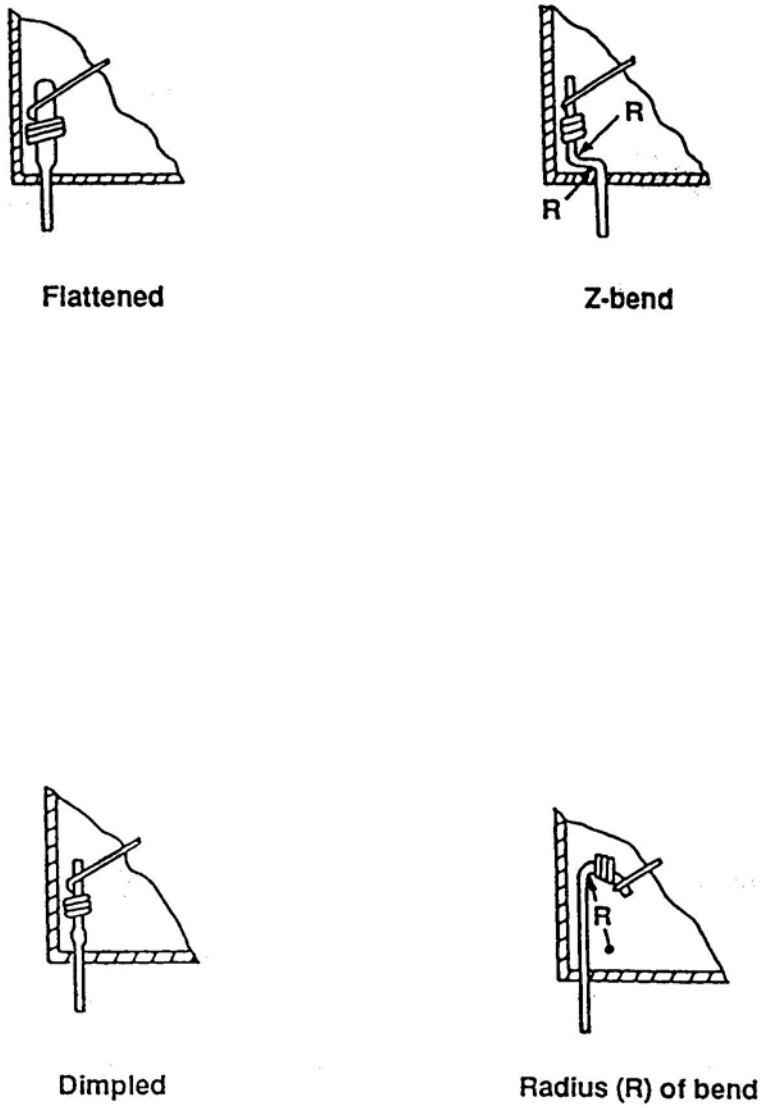

FIGURE 4. Antirotation features (see 5.5.9.8).

5.5.10 Soldering. Soldering and preparation of soldering shall conform to NASA-STD-8739.3. Use of any other soldering standard in lieu of or in addition to NASA-STD-8739.3 shall require the approval of the procuring activity. When several solder compositions are combined to complete a solder joint (e.g.the terminal is pre-plated, low temperature solder is used to wick magnet wire insulation, and the joint is made with a third solder) care shall be taken to assure that the combined materials have the desired melting point.

5.5.11 Soldering equipment and tools. Shall conform to NASA-STD-8739.3 . Use of any other soldering standard in lieu of or in addition to NASA-STD-8739.3 shall require the approval of the procuring activity.

5.5.12 Prepot visual inspection.

5.5.12.1 Examination. The device examination shall include, but not be limited to, inspection for conformance to the construction and workmanship criteria specified below.

5.5.12.2 Solder joints. All solder joints shall be well formed and positioned and shall not show any of the following characteristics when inspected under 10X minimum to 30X maximum magnification.

a. Sharp solder joints (tips, peaks).

b. Excessive solder which obscurers the connection configuration, except connections of AWG 38 or smaller magnet wires.

c. Swelling of stranded leads due to excessive wicking.

d. Loose wire (except stress relief wraps), leads and core bands (if applicable).

e. Foreign or extraneous material embedded in the solder.

f. Fractures, cracks, or pinholes.

g. Bare conductor or dewetting within the solder joint area.

h. Protrusion of the bare wire end of strand out of solder joint.

i. Necking down of the magnet wire at the joint.

j. Pitting or voids in corona free ball connections.

5.5.12.3 Lead wires. Lead wires shall have stress relief of at least three times the insulated wire diameter whenever practical. Stress relief loops shall not interfere with other conductive paths. For any bend, the radius of the bend shall not be less than three times the insulated wire diameter. In addition, the magnet wire shall also have adequate stress relief at the solder joint, and shall be anchored to the coil. A device that displays a sharp bend of any lead wire (solid or stranded) at the solder joint, or peeling out from the solder fillet, shall be rejected, even if the solder joint otherwise appears to be well formed.

NOTE: Due to space limitations, stress relief of magnet wire for cylindrical parts is not practical, in the absence of space limitations, for Families 04, 13, 14, 50, 51 and 52.

5.5.12.4 Coils. Coils of “C” cores and laminations shall be wound either on bobbins or core tubes of appropriate material size.

5.5.12.5 Crossover of turns. There shall be no uninsulated crossover of any one turn in any one layer of insulated interleaved layer-wound coils, nor crossover to the adjacent winding segment of toroidal or cylindrical coils wound in segments.

5.5.12.6 Splices. There shall be no splicing of magnet wires of the same winding or lead wires of the same size. The solder connection of the magnet wires between windings or series connection of designed multi-wound series windings or to lead wire shall not be regarded as a splice within the definition of this section.

5.5.12.7 Extraneous material. There shall be no evidence of extraneous material:

a. In the path of leakage currents, such as: terminal-to-terminal, terminal-to-adjacent winding, terminal-to metallic case, and winding-to-core. (See Figure B-3.)

b. In coil margins, in layer-to-layer or winding-to-winding insulation. (See Figure B-7a, B-8 and B-9).)

5.5.12.8 Cores.

a. Laminated cores ("C" cores, laminations, etc.) shall not show excessive distortion, misalignment of pole faces, foreign material, or excessive spacing in the gap, loose or bent laminations, or any other anomaly.

b. Ferrite and powder cores shall be free of cracks and chips. Chip-outs, as a result of manufacturing, smaller than 0.02 inch in the largest dimension that do not reduce the cross section of the magnetic path by more than 5 percent shall be acceptable.

c. All molypermalloy powder cores (MPP) shall be coated by phenolic resin or epoxy impregnation to provide a minimum breakdown of 500 V rms.

d. Toroidal cores encased in sealed protective boxes shall show no evidence of damage or defect that may allow leakage of the damping medium or introduction of foreign material.

5.5.12.8.1 Protective coating. When possible ferrite and powder toroidal cores shall be of epoxy or parylene coated type or shall be tape wrapped prior to winding. Wire shall be protected from possible abrasion in areas of contact with core.

5.5.12.9 Rejection criteria. Devices which fail to meet one or more of the requirements specified shall be removed from the lot and shall not be shipped.

5.5.13 Impregnation and potting.

5.5.13.1 Drying. Prior to impregnation and potting, all devices shall be dried at sufficient temperatures and for sufficient length of time to minimize the moisture and to cure all tapes. The vacuum drying of devices is preferred. The devices shall be impregnated within 20 minutes after being removed from the drying oven or vacuum chamber. If this is impractical, the devices shall be stored in controlled dry atmosphere. If the devices were exposed to a relative humidity in excess of 30 percent for 30 minutes or more, they shall be re-dried at sufficient temperature and for a sufficient length of time to minimize the moisture.

5.5.13.2 Impregnation. Each device shall be impregnated in an appropriate chamber or molded to assure thorough, void-free impregnation "when practical".

5.5.13.3 Curing. The cure schedule shall be sufficient to assure the complete cure of the impregnation and potting compound throughout the device. Impregnation, potting and bonding materials shall be cured to meet the outgassing requirements of 5.1.1.

5.5.13.4 Preparation of cups or molds. Cups or molds shall be prepared for potting or impregnation as follows:

a. Clean plastic or metal cups with solvents that will not contribute to the degradation of the part; such as commercial grades of isopropyl alcohol, acetone, stoddard solvent, or equivalent. Plastic cups shall be sandblasted or otherwise etched on the inside surface to assure good adhesion of the resin compound to the cups.

   NOTE: Cleaned inner surfaces shall not be touched with bare hands or fingers and cups or molds shall be stored in such a manner as to preclude atmospheric contamination.

b. Wipe molds with the same solvents, or equivalent, for removal of visible dust, dirt, and other undesirable matter.

c. Final rinse cups and molds with the same solvent used in b. above.

5.5.13.5 Impregnating and potting compounds. All impregnating and potting compounds must be degassed. Pot life of materials shall be controlled and shall be in accordance with manufacturer's recommendations. In addition, all potting materials shall be dated for expiration of shelf life, and shall not be used after this date.

5.5.13.6 Equipment. Vacuum chambers and other equipment shall have adequate automatic controls and shall be capable of maintaining the required pressure and temperatures for the time period specified by the applicable specification or source control drawing or by the product bulletin of the compound manufacturer. The inside of the chamber, chamber lid seal, resin containers and device holding fixtures shall be maintained free of dirt and other foreign materials that may inhibit proper operation of the equipment.

5.5.13.7 Voids. Units shall be potted or encapsulated in such a manner as to prevent voids, bubbles, and cracks.

5.5.13.7.1 Internal voids. There shall be no internal voids greater than 0.015 inch in the largest dimension located within 0.005 inch of any bare conductor, solder joint, or terminal. The total volume all voids, and the volume of any one void shall not exceed 10 and 5 percent respectively of the total volume of encapsulant within the device, and shall in no way jeopardize the mechanical or functional integrity of the device.

5.5.13.7.2 Surface voids and depressions. Surface voids and depressions shall not reduce the thickness of the covering over internal parts to less than what is shown in Figure B-4.

5.5.13.7.3 Extraneous material. Care shall be taken to ensure that extraneous material is not introduced during the potting process.

5.6 Quality assurance provisions. Unless otherwise specified, test and inspection methods and criteria shall be in accordance with MIL-PRF-27, MIL-PRF-15305, MIL-PRF-21038, MIL-T-55631, MIL-PRF-83446 or MIL-PRF-39010 as applicable.

5.6.1 Product assurance program. A product assurance program shall be established by the contractor to meet the requirements of appendix A. The contractor shall obtain procuring activity approval of the product assurance program in accordance with appendix A. Approval shall include a product and quality audit by the procuring activity or their designated representative. This audit will cover verification of the implementation of the product assurance program, conformance of design standard and manufacturing techniques of the requirements of this document and test and inspection capabilities.

5.6.1.1 Documentation. Documents shall be maintained, in accordance with appendix A, which specify materials, calibration techniques, processing, test and measurements controls and procedures. These documents shall cover all process steps to be controlled. The documentation shall be available to the operating personnel at all times. It shall be made available to the procuring agency for the purpose of verifying its existence, coverage, implementation and adequacy.

5.6.1.1.1 Lot control.

5.6.1.1.1.1 Class B. A lot control shall be used for each lot. The lot control shall include as a minimum: lot identification, operation, quantity, date of operation, and operator identification.

5.6.1.1.1.2 Class S. Lot control for class S devices shall be required for each part design. As a minimum requirement, the lot control shall constrain the inspection lot to consist of a single part number representing one design and processed as a single lot through all manufacturing steps on the same equipment to the same product assurance program and procurement document and identified with the same date and lot code designation. In addition, the lot shall conform to the following:

a. Each element, such as cores, magnet wire, finished cases, wire lugs and terminals, potting or molding compound used in he manufacture of the part shall be from a single lot and traceable to the lot.

b. Solder for each application shall be of a uniform composition and traceable to the source.

c. In general, all single process operations shall not be changed during processing of the lot.

d. A lot identifying number shall be assigned at the time the lot is assembled. This unique lot identifying number shall be maintained through acceptance and shall be traceable to the production lot and to the lot date code.

e. The manufacturer shall maintain traceability and test records for a minimum of 10 years on each lot date code. The manufacturer shall record when in-process controls and quality conformance inspections start and when they have been completed. The manufacturer shall notify the acquiring activity 30 days minimum prior to the destruction of records.

f. All requirements specified in 5.6.1.1.1.1.

5.6.1.1.2 Process control charts. Process control charts shall be maintained during manufacture. The charts shall contain information such as: process step, lot no. and/or date, action limits and absolute limits and range. Where absolute limits are exceeded, the manufacturer shall document the corrective action taken.

5.6.2 Incoming inspection. Methods and procedures which are used to control inspection, storage, and handling of incoming materials shall be documented. Records shall be provided which verify that materials used in production meet the requirements of the manufacturer's specifications and of the general and detail specifications. As a minimum the following items will be covered.

5.6.2.1 Magnet wire. Magnet wire used in the design and construction of parts specified in accordance with this standard shall meet the following requirements:

a. Each spool of magnet wire prior to being used shall be subjected to the following tests of MW-1000 :

(1) Dielectric test.

(2) Visual and mechanical examination.

(3) Check of bare wire size of the magnet wire by a DC resistance measurement.

b. Provisions shall be made to procure and utilize magnet wire not older than five years from the date of its manufacture. Wire older than five years from the date of its manufacture shall not be used. Wire, by design, shall meet the following evaluation tests in accordance with MW-1000.

(1) Visual and dimension.

(2) Adherence and flexibility including mandrel test.

(3) Elongation.

(4) Springback.

(5) DWV at rated temperature.

(6) Bend (rectangular wire only).

(7) Heat shock.

d. Magnet wire shall be stored in protective resealable containers to protect against dust.

e. Magnet wire shall be stored in a controlled environment, at a temperature of +25°C (±7°C), a pressure of no less than one Standard Atmosphere, and a relative humidity of between 30 to 70 percent.

5.6.2.2 Layer insulation. Dielectric strength, tensile strength, volume resistivity and flexibility.

5.6.2.3 Potting and encapsulation materials. (On samples mixed and cured according to the manufacturer's documented process) dielectric strength, volume resistivity, hydrolitic stability and outgassing.

5.6.2.4 Incoming inspection DPA. Incoming inspection shall be in accordance with MIL-STD-1580, except DPA is not required for open construction devices. 100 percent pre-cap inspection with color images of representative samples (see 5.5.8.1.1) in combination with real-time x-ray (per 5.3.1) may be used in lieu of DPA. All metal surfaces shall be verified for the absence of prohibited materials (e.g., pure tin, zinc, or cadmium). Though DPA is not required, open construction magnetic devices require functional electrical tests and visual and mechanical inspection as a minimum.

5.6.3 Calibration. The establishment and maintenance of a calibration system to control accuracy of the measuring and test equipment shall be in accordance with ANSI/NCSL Z540.3, ISO 10012 or equivalent.

5.6.4 Classification of inspections. The inspections specified herein are classified as follows:

a. Materials inspection.
b. First article inspection.
c. Quality conformance inspection.

5.6.5 Materials inspection. Materials inspection shall be as specified in MIL-PRF-27, MIL-PRF-15305, MIL-PRF-21038, MIL-T-55631, MIL-PRF-83446 or MIL-PRF-39010 as applicable. However, when a definite material is not specified, a material shall be used which will enable the parts to meet the performance requirements of this standard. Acceptance or approval of any constituent material shall not be construed as a guaranty of the acceptance of the finished product. In addition, polymeric materials shall be tested for outgassing and hydrolytic stability, when applicable (see 5.1.1, 5.1.2 and 6.2).

5.6.6 First article inspection. (When specified on contract)

5.6.6.1 First article inspection requirements for qualification. First article inspection shall be performed in lieu of the qualification inspection specified in MIL-T-55631 as applicable. Requirements pertaining to First article inspection shall be as specified in MIL-T-55631. Qualification inspection specified under MIL-PRF-27, MIL-PRF-21038, MIL-PRF-39010, MIL-PRF-15305 and MIL-PRF-83446 shall serve as First article inspection requirements and shall be performed for the applicable part type under MIL-PRF-27, MIL-PRF-21038, MIL-PRF-39010, MIL-PRF-15305 and MIL-PRF-83446. First article approval is valid only on the contract under which it is granted, for a period not exceeding three years from the date of initial qualification, unless extended by the acquiring activity to another contract, provided that during this period the device has been manufactured at least once during each successive twelve month period.

5.6.6.2 Qualification of transformers and inductors based on similarity. Only a transformer or an inductor having passed the First article inspection requirements of 5.6.6.1 shall be used as the reference device to establish a qualification by similarity. A Class S device shall not be qualified on the basis of similarity. The Class B transformer or inductor to be qualified on the basis of similarity shall be manufactured at the same production facility utilizing the same processes as the reference device.

5.6.6.2.1 Similar transformers and inductors (Class B only)(Families 03, 04, 20, 21, 31, 36,37, 40, 41). A similar device defined as a transformer or inductor that meets the following conditions when compared to the reference device.

a. Same or lower operating temperature.
b. Same or lower operating frequency and the same or lower operating power.
c. Same or lower ambient temperature.
d. To be used at an atmospheric pressure of the same or lower altitude.
e. To be used at the same or lower operating voltages and the same or lower dielectric strees per mil of same insulation.
f. Same or lower shock and vibration requirements.
g. Same or greater life time expectancy.
h. Same or lower temperature class.
i. Same family as defined in 4.2 thru 4.7.
j. Same grade as defined in the applicable military specifications.
k. Same type of external and internal mounting, same type of case construction with nominal wall thickness within 25 percent when a case is used, same shape, and same termination (pin or hook terminals).
l. Linear envelope dimensions neither greater than 150 percent nor less than 70 percent of the corresponding dimensions. The total volume of envelope not to exceed 250 percent.
m. Same or greater wire size (cross-sectional area), and the same wire coating material for corresponding windings.

n. Same processing material and specification for case, finish and marking.
o. Same processing material and composition for potting, insulation (tapes and films), impregnation, staking and filling.
p. Same material composition, characteristic and coating for the ferrite and MMP core, same shape, and the same manufacturer.
q. Same bobbin material and characteristics.
r. Same solder composition and welding.
s. Same construction and material for the terminals. For terminals of the same dimensions the required terminal strength requirements to be the same or lower.

5.6.6.2.2 Inspection requirements. Transformers and inductors shall be subjected to and pass the applicable quality conformance inspection requirements of 5.6.7.

5.6.7 Quality conformance inspection.

5.6.7.1 Inspection of product for delivery.

5.6.7.1.1 Class S devices. Inspection of product for delivery shall consist of the applicable group A screening tests (see 5.6.7.3.3 through 5.6.7.3.9.2) and the applicable group B tests (see tables XI through XV). Sample size for group B tests shall be as specified under the sampling plan (see 5.6.7.4.1.2).

5.6.7.1.2 Class B devices. Inspection of product for delivery shall consist of the applicable group A screening tests (see 5.6.7.3.3 through 5.6.7.3.9.2). A device to be qualified by similarity shall be subjected to the tests specified in TABLE IV. Samples of each part type shall be selected at random from the inspection lot which has passed the group A tests.

TABLE IV. Inspection of transformers and inductors similar to Transformers and inductors that have been qualified by test. (Families 03, 04, 20, 21, 31, 36,37,40, 41)

Test 1/	Class B	
	Sample size	Rejects allowed
Visual and mechanical examination (external) Resistance to soldering heat Terminal strength Dielectric withstanding voltage (at atmospheric pressure) 2/ Temperature rise Vibration Shock Dielectric withstanding voltage(at reduced voltage) Insulation resistance Winding continuity Resistance to solvents Solderability Corona discharge (when specified) Electrical characteristics Life (minimum six week test duration, for 1000 hours minimum) Dielectric withstanding voltage (at reduced voltage) Insulation resistance 3/ Electrical characteristics Visual and mechanical examination (external) Visual and mechanical examination (internal) (one sample unit)	3	0

1/ Specified test shall be performed in accordance with MIL-PRF-27 or MIL-PRF-21038 as applicable and in the order shown.
2/ At maximum temperature for the class.
3/ At specified voltage with insulation resistance (IR) of 7,500 megohms minimum.

5.6.7.2 Inspection lot.

5.6.7.2.1 Class B. An inspection lot shall include completely assembled devices of the same grade, construction, class, family, and electrical characteristics, manufactured under essentially the same conditions and having similar construction and materials. (Similar construction and materials shall be construed to include differences that will not affect test results.) Sample units shall be so selected as to be, as far as practicable, representative of the volt-ampere range of electrical values and physical dimensions included in the lot.

5.6.7.2.2 Class S. An inspection lot shall consist of completely assembled devices of a single grade, construction, class, family, and part number from one procurement document. Each lot shall meet all the lot controls specified in 5.6.1.1.1.2 for Class S devices.

5.6.7.3 Group A screening inspection. Screening inspections shall consist of the examinations and tests as specified in Tables V through X.

5.6.7.3.1 Lot acceptance. If, during the 100 percent inspection of subgroup I, 5 percent or (1) device whichever is greater, is discarded, the lot shall be rejected. NOTE: Radiographic and visual inspection shall not be included in the PDA calculation.

5.6.7.3.2 Rejected lots. For class B devices, if an inspection lot is rejected, the contractor may rework it to correct the defects, or screen out the defective units and resubmit for reinspection. Resubmitted lots shall be 100 percent inspected. Such lots shall be separate from new lots, and shall be clearly identified as reinspected lots. Rework of Class S devices shall not be permitted unless approved by the procuring activity.

5.6.7.3.3 Power transformers, power inductors, audio transformers, audio inductors, high power pulse transformers, charging inductors, saturable transformers, and saturable inductors (families 03, 04, 20, 21, 36, 37, 40 and 41 respectively). These devices shall be subjected to the group A screening tests of TABLE V.

5.6.7.3.3.1 Thermal shock. Thermal shock screening shall be in accordance with MIL-PRF-27, and as follows:

a. Number of cycles - The number of cycles shall be as specified in the procurement document but shall be restricted to 5, 10, 15, 25 or 50 cycles for Class B parts and 25 cycles minimum for Class S parts.
b. Continually monitor continuity during the entire final cycle to verify no intermittent conditions. Continuity monitoring current shall not exceed 100 microamperes. Equipment shall be capable of detecting intermittent opens exceeding 100 microseconds.

   NOTE: Continuity monitoring is not required for self-leaded parts with 26 gauge wire and heavier, or equivalent cross sectional area.

c. Class S parts using magnet wire smaller than AWG 38 shall have DC resistance measured before and after the thermal shock screen. The change in resistance shall not exceed ±3 percent.

5.6.7.3.4 Burn-in Applicable to Class S and B parts.

5.6.7.3.4.1 Transformers

5.6.7.3.4.1.1 Power burn-in (applicable for transformers with an output greater than 0.8 watts or temperature rise exceeding 30˚C). Devices shall be tested as follows:

a. Test duration: 96 hours minimum.
b. Test temperature: maximum rated ambient temperature. (See applicable specification)
c. Test voltages and currents: Rated input voltage and current at minimum rated frequency and at maximum rated load.

TABLE V. Group A screening tests for families 03, 04, 20, 21, 36, 37,40 and 41 respectively (see 5.6.7.3.3).

Examination/Test	Class		Applicable Military Specification	Inspection
	S	B		
Subgroup I				
Thermal shock	X	X	See 5.6.7.3.3.1	100 percent
Temperature rise 1/	X	X	MIL-PRF-27	
Burn-in	X	X	See 5.6.7.3.4	
Seal (when applicable)	X	X	MIL-PRF-27	
Induced voltage	X	X	MIL-PRF-27	
Dielectric withstanding voltage (at atmospheric pressure)	X	X	MIL-PRF-27	
Insulation resistance	X	X	MIL-PRF-27	
Electrical characteristics	X	X	MIL-PRF-27	
Corona discharge (when specified)	X	X	MIL-PRF-27	
Radiographic inspection	X	2/	See appendix B	
Subgroup II				
Visual and dimensional examination (external)	X	X	MIL-PRF-27	100 percent

1/ Test 2 units for temperature rise per applicable specification if temperature rise is not known.
2/ When specified.

5.6.7.3.4.1.2 No load burn-in (applicable for transformers with an output equal to or less than 0.8 watts and temperature rise less than 30˚C). Devices shall be tested as follows:

a. Test duration: 96 hours minimum
b. Test temperature: Maximum rated ambient temperature. (See applicable specification)
c. Test voltages and current: Rated input voltage and current at minimum rated frequency with no load.

5.6.7.3.4.2 No-load burn-in for Inductors: Devices shall be tested as follows:

a. Test duration: 96 hours minimum
b. Test temperature: Maximum operating temperature. (See applicable specification)
c. Test voltages and currents: Not applicable.

5.6.7.3.5 Radio frequency, fixed, and variable transformers (families 11 and 12, respectively). These devices shall be subjected to the group A screening tests in TABLE VI.

TABLE VI. Group A screening tests for families 11, 12 respectively (see 5.6.7.3.5).

Examination/Test	Class		Applicable Military Specification	Inspection
	S	B		
Subgroup I				
Thermal shock	X	X	See 5.6.7.3.3.1	100 percent
Temperature rise 1/	X	X	MIL-T-55631	
Burn-in	X	X	See 5.6.7.3.4	
Seal (when applicable)	X	X	MIL-T-55631	
Induced voltage			MIL-T-55631	
Dielectric withstanding voltage (at atmospheric pressure)	X	X	MIL-T-55631	
Insulation resistance	X	X	MIL-T-55631	
Electrical characteristics	X	X	MIL-T-55631	
Radiographic inspection	X	2/	See appendix B	
Subgroup II				
Visual and dimensional examination (external)	X	X	MIL-T-55631	100 percent

1/ Test 2 units for temperature rise per applicable specification if temperature rise is not known.
2/ When specified.

5.6.7.3.6 Radio frequency fixed and variable coils (families 13 and 14 respectively). These devices shall be subjected to the group A screening tests, in TABLE VII.

TABLE VII. Group A screening tests for families 13 and 14 (See 5.6.7.3.6)

Examination/Test	Class		Applicable Military Specification	Inspection
	S	B		
Subgroup I				
Thermal shock	X	X	See 5.6.7.3.6.1	100 percent
Temperature rise 1/	X	X	MIL-PRF-15305	
No-load Burn-in	X	X	See 5.6.7.3.6.2	
Dielectric withstanding voltage	X	X	MIL-PRF-15305	
Insulation resistance	X	X	MIL-PRF-15305	
Inductance	X	X	MIL-PRF-15305	
Q	X	X	MIL-PRF-15305	
Self resonant frequency	X	X	MIL-PRF-15305	
DC resistance	X	X	MIL-PRF-15305	
Radiographic inspection	X	2/	See appendix B	
Subgroup II				
Visual and dimensional examination (external)	X	X	MIL-PRF-15305	100 percent

1/ Test 2 units for temperature rise per applicable specification if temperature rise is not known.
2/ When specified.

5.6.7.3.6.1 Thermal shock. Thermal shock screening shall be in accordance with MIL-PRF-15305, and as follows: (Note: End point measurements per MIL-PRF-15305 shall not apply).

a. Number of cycles: 25.
b. Continually monitor continuity during the entire final cycle to verify no intermittent conditions. Continuity monitoring current shall not exceed 100 microamperes. Equipment shall be capable of detecting intermittent opens exceeding 100 microseconds.
c. Class S parts using magnet wire smaller than AWG 38 shall have DC resistance measured before and after the thermal shock screen. The change in resistance shall not exceed ±3 percent.

5.6.7.3.6.2 No load burn-in. Devices shall be tested as follows:

a. Test duration: 96 hours minimum
b. Test temperature: Maximum rated operating temperature. (See applicable specification)
c. Test voltage: Not applicable

5.6.7.3.7 Low power pulse transformers (family 31). These devices shall be subjected to the group A screening tests in TABLE VIII.

TABLE VIII. Group A screening tests for family 31 (see 5.6.7.3.7).

Examination/Test	Class		Applicable Military Specification	Inspection
	S	B		
Subgroup I				
Thermal shock	X	X	See 5.6.7.3.6.1	100 percent
Temperature rise 1/	X	X	MIL-PRF-21038	
No-load Burn-in	X	X	See 5.6.7.3.6.2	
Dielectric withstanding voltage	X	X	MIL-PRF-21038	
Insulation resistance	X	X	MIL-PRF-21038	
Inductance	X	X	MIL-PRF-21038	
Q	X	X	MIL-PRF-21038	
Self resonant frequency	X	X	MIL-PRF-21038	
DC resistance	X	X	MIL-PRF-21038	
Radiographic inspection	X	2/	See appendix B	
Subgroup II				
Visual and dimensional examination (external)	X	X	MIL-PRF-21038	100 percent

1/ Test 2 units for temperature rise per applicable specification if temperature rise is not known.
2/ When specified.

5.6.7.3.8 Radio frequency, fixed and variable, chip coils (families 50 and 51, respectively). These devices shall be subjected to the group A screening tests in TABLE IX.

TABLE IX. Group A screening tests for families 50 and 51 (see 5.6.7.3.8).

Examination/Test	Class		Applicable Military Specification	Inspection
	S	B		
Subgroup I				
Thermal shock	X	X	See 5.6.7.3.8.1	
No-load Burn-in	X	X	See 5.6.7.3.8.2	
Dielectric withstanding voltage	X	X	MIL-PRF-83446	
Insulation resistance	X	X	MIL-PRF-83446	100 percent
Inductance	X	X	MIL-PRF-83446	
Q	X	X	MIL-PRF-83446	
Self resonant frequency	X	X	MIL-PRF-83446	
DC resistance	X	X	MIL-PRF-83446	
Radiographic inspection	X	1/	See Appendix B	
Subgroup II				
Visual and dimensional examination (external)	X	X	MIL-PRF-83446	100 percent

1/ When specified.

5.6.7.3.8.1 Thermal shock. Thermal shock screening shall be in accordance with MIL-PRF-83446, and as follows:

a. Number of cycles: 25
b. Continually monitor continuity during the entire final cycle to verify no intermittent conditions. Continuity monitoring current shall not exceed 100 microamperes. Equipment shall be capable of detecting intermittent opens exceeding 100 microseconds.
c. Class S parts using magnet wire smaller than AWG 38 shall have DC resistance measured before and after the thermal shock screen. The change in resistance shall not exceed ±3 percent.

5.6.7.3.8.2 No-load burn-in.

a. Test duration: 96 hours minimum.
b. Test temperature: Maximum rated operating temperature. (See applicable specification)
c. Test voltage: Not applicable.

5.6.7.3.9 Radio frequency fixed coils (family 52). These devices shall be subjected to the group A screening tests, in TABLE X.

TABLE X. Group A screening tests for family 52 (See 5.6.7.3.9)

Examination/Test	Class		Applicable Military Specification	Inspection
	S	B		
Subgroup I				
Thermal shock	X	X	See 5.6.7.3.9.1	100 percent
Temperature rise 1/	X	X	MIL-PRF-39010	
No-load Burn-in	X	X	See 5.6.7.3.9.2	
Dielectric withstanding voltage	X	X	MIL-PRF-39010	
Insulation resistance	X	X	MIL-PRF-39010	
Inductance	X	X	MIL-PRF-39010	
Q	X	X	MIL-PRF-39010	
Self resonant frequency	X	X	MIL-PRF-39010	
DC resistance	X	X	MIL-PRF-39010	
Radiographic inspection	X	2/	See appendix B	
Subgroup II				
Visual and dimensional examination	X	X	MIL-PRF-39010	100 percent

1/ Test 2 units for temperature rise per applicable specification if temperature rise in not known.
2/ When specified.

5.6.7.3.9.1 Thermal shock. Thermal shock screening shall be in accordance with MIL-PRF-39010, and as follows:

a. Number of cycles: 25
b. Continually monitor continuity during the entire final cycle to verify no intermittent conditions. Continuity monitoring current shall not exceed 100 microamperes. Equipment shall be capable of detecting intermittent opens exceeding 100 microseconds.
c. Class S parts using magnet wire smaller than AWG 38 shall have DC resistance measured before and after the thermal shock screen. The change in resistance shall not exceed ±3 percent.

5.6.7.3.9.2 No-load burn-in.

a. Test duration: 96 hours minimum.
b. Test temperature: Maximum rated operating temperature. (See applicable specification)
c. Test voltage: Not applicable.

5.6.7.4 Group B inspection. Group B inspection shall consist of the applicable group B tests (see tables XI through XV). For Class S devices, the group B inspection shall be performed on sample units selected at random from each inspection lot that passed the group A inspection. Group B inspection shall not apply to those lots from which devices are sampled for First article inspection. Group B inspection for Class B devices shall be performed when specified by the procurement document. The group B

inspection, when specified for Class B devices, shall be performed on sample units selected at random from inspection lots which have passed the group A inspection. Group B inspection shall not apply to those lots from which devices are sampled for First article inspection.

5.6.7.4.1 Sampling plan.

5.6.7.4.1.1 Class B. The sampling plan shall be specified in the procurement document. For device qualification based on similarity, a sample consisting of three of the devices shall be subjected to applicable tests specified in TABLE IV.

5.6.7.4.1.2 Class S. Four sample units shall be subjected to the applicable group B tests. Two sample units shall be subjected to the tests of Subgroup 1 and two sample units to the tests of Subgroup 2.

5.6.7.4.2 Failures.

5.6.7.4.2.1 Class S. If the number of failures exceeds the number allowed in Tables XI through XV, the sample shall be considered to have failed. (See 5.6.7.4.4)

5.6.7.4.2.2 Class B. The number of allowable failures shall be specified in the procurement document.

5.6.7.4.3 Disposition of sample units. Disposition of sample units which have been subjected to the group B inspection shall be as specified in the procurement document.

5.6.7.4.4 Noncompliance.

5.6.7.4.4.1 Class B devices. If a sample fails to pass group B inspection, the manufacturer shall notify the procuring activity and the cognizant inspection activity of such failure and take corrective action on the materials or processes, or both, as warranted, and on all units of product which can be corrected and which were manufactured under essentially the same conditions, with essentially the same materials, processes, etc., and which are considered subject to the same failure. Acceptance and shipment of the product shall be discontinued until corrective action acceptable to the procuring activity has been taken. After the corrective action has been taken, group B inspection shall be repeated on additional sample units (all inspections, or the inspection which the original sample failed, at the option of the qualifying activity). Group A inspection may be reinstituted; however, final acceptance and shipment shall be withheld until the group B inspection has shown that the corrective action was successful. In the event of failure after reinspection, information concerning the failure shall be furnished to the cognizant inspection activity and the procuring activity.

5.6.7.4.4.2 Class S devices. If an inspection lot fails to pass group B inspection, the inspection lot shall not be delivered on the contract or purchase order. The manufacturer shall notify the procuring activity and cognizant inspection activity of the failure and take corrective action on the material or processes, or both as warranted. A failure analysis (see 5.6.7.4.4.2.1) shall be performed on the failing product and forwarded to the procuring activity. A copy of the results shall be maintained by the manufacturer.

5.6.7.4.4.2.1 Failure analysis. If any of the sample units subjected to the group B tests fail during testing, a detailed failure analysis shall be conducted to establish the cause of failure and the corrective actions that would eliminate subsequent failures of a similar type. A failure is categorized as lot oriented if its occurrence is apparently related to an identified lot or lots. A failure is categorized as not lot oriented if its occurrence is random and it cannot be related to a specific lot or lots. Each failure is further identified as screenable or not screenable from the completed production items. If the failure analysis shows that the failure mechanism is screenable, the entire failed lot may be screened and the group B test in which the failure occurred shall be repeated. If a failure occurs during the second group B test, the entire production lot shall be rejected. If the failure mechanism is screenable, all prior and subsequent production lots that may contain the identified failure mechanism shall also be screened, except as may be stated otherwise in the detailed requirements for the specific part type. If the failure mechanism is lot oriented and not screenable, all production lots that contain the identified failure mechanism shall be rejected unless other disposition is directed by the contracting officer and procuring activity.

5.6.7.5 Inspection of packaging. Inspection of packaging for delivery shall be as specified in MIL-PRF-27, MIL-PRF-15305, MIL-PRF-21038, MIL-T-55631, MIL-PRF-39010 or MIL-PRF-83446 as applicable.

TABLE XI. Group B tests for power transformers, power inductors, audio transformers, audio inductors, high power pulse transformers, charging inductors, saturable transformers, and saturable inductors (families 03, 04, 20, 21, 36, 37 40 and 41 respectively) and low power pulse transformers (family 31) (see 5.6.7.4).

Test 1/	Class S	
	Sample Size	Defective units allowed
Subgroup 1 Resistance to soldering heat 2/ Terminal strength 3/ Induced voltage 4/ 5/ Dielectric withstanding voltage 4/ (at atmospheric pressure) Electrical characteristics Visual and mechanical examination (external) Visual and mechanical examination (internal) (one sample unit) 6/	2	0
Subgroup 2 Solderability Resistance to solvents Vibration Shock Life 7/ Induced voltage 5/ 10/ Dielectric withstanding voltage (at reducedvoltage) Insulation resistance 8/ Electrical characteristics Visual and mechanical examination (external) Visual and mechanical examination (internal) (one sample unit) 6/	2	0
Subgroup 3 Corona discharge 9/	2	0

1/ Specified tests shall be performed in accordance with MIL-PRF-27, except tests for family 31 shall be performed in accordance with MIL-PRF-21038.
2/ Not applicable to self-leaded parts with lead lengths that meet a 4 inch minimum requirement with 26 gauge wire and smaller.
3/ Twist test is not applicable to self leaded parts.
4/ At maximum temperature for the class.
5/ Applicable when any winding has a rated voltage in excess of 25 volts rms.
6/ Real time x-ray is an acceptable method of examination in lieu of dissection or disassembly.
7/ Reduced life test, raise temperature one class for the duration of 500 hours total.
8/ At specified voltage with insulation resistance (IR) of 7,500 megohms minimum, except family 31 (IR) will be at 750 megohms minimum.
9/ Applicable when materials stressed greater than 100 volts/mil due to maximum operating voltage. Subject one sample each from subgroups 1 and 2 to this test.
10/ Reduce induced voltage 1.3X the rated voltage of the device.

NOTE: Induced voltage is not applicable to single winding inductors.

Table XII. Group B tests for RF Coils (families 13, and 14) (see 5.6.7.4).

Test 1/	Class S	
	Sample Size	Defective units allowed
Subgroup 1 Electrical characteristics (initial) Terminal strength Vibration 3/ Shock (specified pulse) 3/ Resistance to soldering heat Temperature rise Electrical characteristics (final) Visual and mechanical examination (external) Visual and mechanical examination (internal) (one sample unit) 2/	2	0
Subgroup 2 Solderability Resistance to solvents Electrical characteristics (initial) Life Dielectric withstanding voltage (at reduced voltage) Insulation resistance Electrical characteristics (final) Visual and mechanical examination (external)	2	0

1/ Specified tests shall be performed in accordance with MIL-PRF-15305
2/ Real time x-ray is an acceptable method of examination in lieu of dissection or disassembly.
3/ Sample units shall be mounted with the body clamped or cemented to a flat surface rather than soldered to rigidly supported terminals.

Table XIII. Group B tests for RF transformers (families 11 and 12) (see 5.6.7.4).

Test 1/	Class S	
	Sample Size	Defective units allowed
Subgroup 1 Resistance to soldering heat Terminal strength Operating torque (when applicable) Temperature rise Dielectric withstanding voltage (2 x working voltage) 2/ Electrical characteristics Vibration, winding continuity Visual and mechanical examination (external) Visual and mechanical examination (internal) *(one sample unit) 6/	2	0
Subgroup 2 Solderability Resistance to solvents Life 3/ Induced voltage Dielectric withstanding voltage (at reduced voltage) Insulation resistance 4/ Electrical characteristics (final) Visual and mechanical examination (external) Visual and mechanical examination (internal) *(one sample unit) 6/	2	0
Subgroup 3 Corona discharge 5/	2	0

1/ Specified tests shall be performed in accordance with MIL-T-55631.
2/ At maximum temperature for the class.
3/ Raise temperature one class, for 500 hours.
4/ Full voltage with insulation resistance (IR) of 1.5 times the specified value.
5/ Applicable when material is stressed greater than 100 volts/mil due to maximum operating Voltage. Subject one sample each from subgroups 1 and 2 to this test.
6/ Real time x-ray is an acceptable method of examination in lieu of dissection or disassembly.

Table XIV. Group B tests for RF Chip Coils (families 50 and 51) (see 5.6.7.4).

Test 1/	Class S	
	Sample Size	Defective units allowed
Subgroup 1 Electrical characteristics (initial) 2/ Low temperature operation Temperature rise Overload Moisture resistance Electrical characteristics Inductance Q High temperature exposure Electrical characteristics (final) 2/ Turning torque (when applicable) Bond strength Visual and mechanical examination (external) Visual and mechanical examination (internal)(one Sample) 3/	2	0
Subgroup 2 Solderability Electrical characteristics (initial) 2/ Life Dielectric withstanding voltage (at reduced voltage) Insulation resistance Electrical characteristics (final) 2/ Visual and mechanical examination (external)	2	0

1/ Specified tests shall be performed in accordance with MIL-PRF-83446
2/ All measurements are made with sample devices mounted on substrates.
3/ Real time x-ray is an acceptable method of examination in lieu of dissection or disassembly.

Table XV. Group B tests for RF fixed coils (family 52) (see 5.6.7.4).

Test 1/	Class S	
	Sample Size	Defective units allowed
Subgroup 1 Electrical characteristics (initial) Terminal strength Vibration Shock (specified pulse) Resistance to soldering heat Temperature rise Electrical characteristics (final) Visual and mechanical examination (external) Visual and mechanical examination (internal) (one sample unit) 2/	2	0
Subgroup 2 Resistance to solvents Solderability Electrical characteristics (initial) Life 3/ Dielectric withstanding voltage (at reduced voltage) Insulation resistance Electrical characteristics (final) Visual and mechanical examination (external)	2	0

1/ Specified tests shall be performed in accordance with MIL-PRF-39010.
2/ Real time x-ray is an acceptable method of examination in lieu of dissection or disassembly.
3/ Duration of test is 2000 hours or as specified by the acquiring activity.

6. NOTES

(This section contains information of a general or explanatory nature that may be helpful, but is not mandatory.)

6.1 Subject term (key word) listing.

Cores
Families
Impregnation and potting
Internal elements
Materials
Solder joints
Splices
Voids

6.2 Environmentally preferable material. Environmentally preferable materials should be used to the maximum extent possible to meet the requirements of this specification. As of the dating of this document, the U.S. Environmental Protection Agency (EPA) is focusing efforts on reducing 31 priority chemicals. The list of chemicals and additional information is available on their website https://www.epa.gov/osw/hazard/wastemin/priority.htm. Use of these materials should be minimized or eliminated unless needed to meet the requirements specified herein.

6.3 Changes from previous issue. Marginal notations are not used in this revision to identify changes with respect to the previous issue due to the extent of the changes.

PRODUCT ASSURANCE PROGRAM

A.1. SCOPE

A.1.1 This appendix contains details of the product assurance program requirements which serve as the basis for product line verification and constitute a pre-condition for supplying devices in accordance with this standard. The information contained herein is intended for compliance.

A.2. APPLICABLE DOCUMENTS

This section is not applicable to this appendix.

A.3. PRODUCT ASSURANCE PROGRAM

A.3.1 Manufacturers requirements. The manufacturer shall establish, implement, and maintain a product assurance program in accordance with A.3.1 through A.3.1.3.6. The manufacturer's product assurance program shall demonstrate and assure that design, manufacture, inspection, and testing are adequate to assure compliance with the applicable requirements and quality standards of this standard and the procurement document. Where the manufacture or any portion of the manufacturing and testing operation is done at other than the manufacturer's facility, it shall be the responsibility of the manufacturer to secure and prove the documentation and control of the product assurance program as described herein. The program shall be documented in these ways:

a. Design, processing, manufacturing, and testing instructions (see A.3.1.1)

b. Records to be maintained (see A.3.1.2)

c. Program Plan (see A.3.1.3).

The program shall indicate which documentation applies to Class S and which to Class B.

All required documentation shall be available at, and continually effective in, the plant of the manufacturer producing devices which are intended to be offered for first article and quality conformance inspections under this standard.

All required program documentation shall be available for review by the procuring agency upon request, and the procuring agency shall have access to nonproprietary areas of the manufacturer's plant for the purpose of verifying its implementation.

The implementation of all proprietary documentation shall be certified by a responsible official of the manufacturer upon request by the procuring agency.

A.3.1.1 Design, processing, manufacturing, and testing instructions. The manufacturer shall have in effect documented instructions covering, as a minimum, these areas:

a. Conversion of customer requirements into manufacturer's internal instructions (see A.3.1.1.1)
b. Personnel training and testing (see A.3.1.1.2)
c. Inspection of incoming materials, manufacturing facilities, and work in process (see A.3.1.1.3)
d. Quality-control operations (see A.3.1.1.4)
e. Quality-assurance operations (see A.3.1.1.5)
f. Design, processing, rework tool and materials standards and instructions (see A.3.1.1.6)
g. Cleanliness control in work areas (see A.3.1.1.7)
h. Design, material, and process change control (see A.3.1.1.8)
i. Tool, gauge, and test equipment maintenance and calibration (see A.3.1.1.9)

j. Failure and defect analysis and data feedback (see A.3.1.1.10)
k. Corrective action and evaluation (see A.3.1.1.11)
l. Incoming, in-process, and outgoing inventory control (see A.3.1.1.12)

Detailed requirements for coverage of these items are stated in A.3.1.1.1 through A.3.1.1.12. These requirements will normally be expected to be met by the manufacturer's standard drawings, specifications, process instructions, and other established manufacturing practices. If particular requirements are not covered by the manufacturers established practices, suitable documentation shall be added to satisfy those requirements.

A.3.1.1.1 Conversion of customer requirements into manufacturer's internal instructions. The procedure by which customer requirements, as expressed in specifications, purchase orders, etc., are converted into working instructions for the manufacturer's personnel shall be documented.

A.3.1.1.2 Personnel training and testing. The motivational and work training and testing practices employed to establish, evaluate, and maintain the skills of personnel engaged in reliability-critical work shall be documented as to form, content, and frequency of use.

A.3.1.1.2.1 Certification of Personnel. The contractor shall have a written procedure covering the training of production and inspection personnel. All employees shall be instructed in proper handling of parts and materials during production, testing, and inspection operations. Only employees who have received this instruction shall be allowed to handle these materials or parts. In addition there shall be a written procedure whereby personnel performing critical tasks on Class S parts are certified to perform their assigned tasks. Certification shall be determined on a continuous basis for each operator and a record maintained of each operator's performance. Any operator whose quality performance does not meet certification requirements shall receive retraining or reassignment as required. The term "critical tasks" shall, as a minimum, include coil winding, coil termination, soldering, welding, assembly, potting, encapsulation, and testing.

A.3.1.1.3 Inspection of incoming materials and manufacturing facilities , and work in process. Inspection operations shall be documented as to type of inspection, sampling and test procedures, acceptance-rejection criteria, and frequency of use.

A.3.1.1.4 Quality-control operations. Quality-control operations shall be documented as to type, procedures, rating criteria, action criteria, records, and frequency of use. All critical in-process operations used in the manufacturing of these devices shall be inspected by an adequately trained inspector. If circumstances preclude inspections after the process is complete, the inspection shall occur during the process.

A.3.1.1.5 Quality-assurance operations. Quality-assurance operations shall be documented as to type, procedures, equipment, judgment and action criteria, records, and frequency of use.

A.3.1.1.6 Design, processing, manufacturing, equipment, and materials instructions. Device design, processing, manufacturing equipment and materials shall be documented in drawings, standards, specifications, or other appropriate media which shall cover the requirements and tolerances for all aspects of design and manufacture including equipment test, materials procurement, and handling, design-verification testing, and processing steps. As a minimum requirement, detailed documentation must exist for the following items and must be adequate to assure that quantitative controls are exercised, that tolerances or limits of control are sufficiently tight to assure a reproducible high quality product and that process and inspection records reflect the results actually achieved:

a. Incoming materials control
b. Winding machine setup
c. Winding uniformity

d. Layer insulation
e. Winding finishing and termination
f. Soldering and/or welding
g. Core assembly
h. Rework
i. Potting and encapsulation
j. Sealing.

A.3.1.1.7 Cleanliness in work areas. The requirements for cleanliness in each work area in which unsealed devices, or parts thereof, are processed or assembled shall be documented.

A.3.1.1.8 Design, material, and process change control. The methods and procedures for implementation and control of changes in device design, material, and processing, and for making change information available to the procuring activity, when applicable, shall be documented.

A.3.1.1.9 Tool, gauge, and test equipment maintenance and calibration. The maintenance and calibration procedures and the frequency of scheduled actions for tools, gauges, and test equipment shall be documented and in accordance with the requirements of ANSI/NCSL Z540.3, ISO 10012 or equivalent.

A.3.1.1.10 Failure and defect analysis and feedback. The procedures for identification, handling, and analysis of failed or defective devices and for dissemination of analysis data shall be documented, including the procedure for informing the procuring agency of analysis results, when applicable.

A.3.1.1.11 Corrective action and evaluation. The procedure and responsibility for decisions regarding the necessity for corrective action as a result of failure or defect analysis, and for evaluation and approval of proposed corrective actions, shall be documented. If the procedure for evaluation and approval of changes proposed for other reasons, such as cost reduction or product improvement, differs from the above, it shall also be documented.

A.3.1.1.12 Incoming, in-process, and outgoing inventory control. The methods and procedures shall be documented which are used to control storage and handling of incoming materials, work in process, and warehoused and outgoing product in order to (a) achieve such factors as age control of limited-life materials, work, or finished and (b) prevent inadvertent mixing of conforming and nonconforming materials, work, or finished product. In addition, for class S devices, tests and inspections performed by the manufacturers on procured materials and supplies shall include verification of chemical, physical, and functional characteristics required by manufacturer drawings and specifications. Procedures shall be prepared and maintained for controlling the receipt of procured materials and supplies. The procedures shall provide the following:

a. Withholding received materials or supplies from use pending completion of the required inspections or tests, or the receipt of necessary reports.
b. Segregation and identification of nonconforming materials and supplies from conforming materials and supplies and removal of nonconforming subassemblies and parts.
c. Identification and control of limited-life materials and supplies.
d. Identification and control of raw materials.
e. Assurance that the required tests reports, certifications, etc., have been received.
f. Correct identification of materials released from receiving inspection and test to clearly indicate acceptance or rejection status of material pending review action.
g. Traceability of materials throughout the production process to the accepted product. Completed parts shall be identified to permit positive correlation to the production lot.

A.3.1.2 Records to be maintained. The records required by this section shall be continuously maintained during the manufacture of devices which are intended to be submitted for quality conformance inspection under this specification. The records pertaining to incoming and in-process inspections and those pertaining to quality conformance inspection shall be retained for a minimum of 3 years, after performance of the inspections. Records shall be maintained as a minimum for:

a. Personnel training and testing (A.3.1.2.1)
b. Inspection operations (A.3.1.2.2)
c. Failure and defect reports and analyses (A.3.1.2.3)
d. Initial documentation and subsequent changes in designs, materials or processing (A.3.1.2.4)
e. Equipment calibrations (A.3.1.2.5)
f. Process, manufacturing facilities, and materials controls (A.3.1.2.6)
g. Product lot identification (A.3.1.2.7)

Detail requirements for records are stated in A.3.1.2.1 through A.3.1.2.7.

A.3.1.2.1 Personnel training and testing. Records shall cover the nature of training or testing given, the date thereof by week and length in hours, and the group(s) of personnel given work training and testing. The records need not indicate occasional specialized training, retraining, or testing of individuals, and are required only for motivational and product-related training and testing as distinguished from safety, first aid, etc.

A.3.1.2.1.1 Training of operators and inspectors for Class S. All critical processes and production inspections shall be performed by personnel who have been trained by the manufacturer to perform their assigned task in accordance with manufacturer's in-house standards, including a formal training and test procedure to assure the proficiency of each individual. Each individual shall be retested and/or retrained at the end of a designated period or when personnel performance indicates poor proficiency. Personnel shall not be used in critical processes or inspections until the required level of proficiency has been demonstrated.

A.3.1.2.2 Inspection operations. Records of inspection operations shall cover the tests or inspections made, the materials group (lot, batch, etc.) inspected, the controlling documentation, the date of completion of inspection, the amount of material tested, and acceptance, rejection, or other final disposition of the material.

A.3.1.2.3 Failure and defect reports and analyses. Records of failed or defective devices shall cover the source from which each device was received, the test or operation during which failure occurred or defects were observed, and prior testing or screening history of the device, the date of receipt, and the disposition of the device. Records of failure and defect analyses shall cover the nature of the reported failure or defect (failure or defect mode), verification of the failure or defect, the nature of any device discrepancies which were found during analysis (failure or defect mechanism), assignment of the failure-activating cause if possible, the date of completion of the analysis, identification of the group performing the analysis, disposition of the device after analysis, and the distribution of the record. The record shall also treat the relationship of observed failure or defect modes in related lots or devices and, where applicable, corrective action taken as a result of the findings.

A.3.1.2.4 Changes in design, materials, or processing. Records shall cover the initial documentation and all changes with the date upon which each change in design, materials, or processing becomes effective. For devices intended to be submitted for quality conformance inspection under this specification, the documents authorizing and implementing the change, and identification of the first production and/or quality conformance inspection lot(s) (as applicable) within which product incorporating the change is included shall be maintained.

A.3.1.2.5 Equipment calibrations. Records shall cover the scheduled calibration intervals for each equipment item, the dates of completion of actual calibration, identification of the group performing the calibration, and certification of the compliance of the equipment with documented requirements after calibration, in accordance with ANSI/NCSL Z540.3, ISO 10012 or equivalent.

A.3.1.2.6 Process, manufacturing facilities, and materials controls. Records shall cover the implementation of devices such as control charts (e.g., X and R charts) or other means of indication of the degree of control achieved at the points in the material, manufacturing facility, and assembly process flow documented in the manufacturing instructions. Records shall also indicate the action taken when each out-of-control condition is observed, and the disposition of product processed during the period of out-of-control operation.

A.3.1.2.7 Product lot identification. Records shall be capable of identifying each production and/or acceptance-inspection lot (as applicable) of product, these items as a minimum:

a. The acceptance-inspection tests performed on the lot, and their results.
b. The serial numbers (when applicable) of all devices in the lot.
c. The date of completion of acceptance inspection of the lot.
d. Identification of the lot.
e. The pertinent detail specification under which inspection was performed.
f. Final disposition of the lot (withdrawn, not accepted, accepted).
g. Procuring activity source inspection disposition of the lot.
h. Traceability of all materials used in the production process back to the manufacturer and his lot or batch identification.

A.3.1.3 Program plan. The program plan shall be established and maintained on a current basis by the manufacturer, and shall be delivered to the procuring agency for review (prior to survey, when applicable). It shall consist of a volume or portfolio, or series of same, which will serve to demonstrate to the procuring agency that the manufacturer's understanding of a complete product assurance program, as exemplified by his documentation system, is adequate to assure compliance of his product with the applicable specifications and quality standards. If the product assurance program exemplified is applied consistently to all product lines intended to be submitted for acceptance inspection under this specification, only one program plan is required for each manufacturing plant; any difference in treatment of different product lines within a plant shall be stated and explained in the program plan, or separate program plans prepared for such different lines. The program plan shall contain as a minimum, these items:

a. Functional block organizational chart (A.3.1.3.1)
b. Manufacturing flow chart (A.3.1.3.2)
c. Proprietary documents (A.3.1.3.3)
d. Examples of design, material, equipment, visual standard, and processing instructions (A.3.1.3.4)
e. Examples of records (A.3.1.3.5)
f. Examples of design, material and process change control documents (A.3.1.1.8)
g. Examples of failure and defect analysis and feedback documents (A.3.1.1.10)
h. Examples of corrective action and evaluation documents (A.3.1.1.11)
i. Manufacturer's internal instructions for internal visual inspection (A.3.1.3.6)
j. Manufacturing practices (see 5.5).

Detail requirements for these items are described in A.3.1.3.1 through A.3.1.3.6, A.3.1.1.8, A.3.1.1.10, and A.3.1.1.11.

A.3.1.3.1 Functional block organization chart. This chart shall show, in functional block-diagram form, the lines of authority and responsibility (both line and staff) for origination, approval, and implementation of the several aspects of the product assurance program. Names of incumbents are not required in this chart.

A.3.1.3.2 Manufacturing flow chart. This chart shall show, in flow-chart form, the manufacturing sequence typical of the product line under consideration, including inspection and process-control stations. If desired, a separate chart may be used for quality-assurance operations. Insofar as practical, each manufacturing flow chart station shall be keyed (by document number and the step(s) it controls) to the pertinent exemplary documents (see A.3.1.3.3 through A.3.1.3.5) included in the program plan, to facilitate understanding of the interrelationships of the various documents.

A.3.1.3.2.1 Manufacturing baseline for class S devices. The flow chart for class S devices will show all manufacturing, inspection, testing, and quality verification points and the point where all materials or subassemblies enter the flow. The chart will identify all documents pertaining to the procurement and inspection of materials, the production processes, the production environments and production controls which were used. The documents will be identified by name, number, and revision in effect at the time of manufacturer certification, or changes approved thereafter. The manufacturer shall maintain a file/book of all referenced documents noted on the flow chart, including in-house documents referenced there for use by the qualification teams and the designated procurement agency representative(s).

A.3.1.3.3 Proprietary-documents. A listing of proprietary documents shall be included in the program plan and maintained on a current basis (see A.3.1).

A.3.1.3.4 Examples of design, material, equipment, and processing instructions. An example of each type of design, material, equipment, visual standard, and processing instructions used in the manufacture of devices intended to be submitted for acceptance inspection under this standard shall be included in the program plan. These may be either dummies or actual working documents, but shall in either event show the form of the pertinent document; blank forms shall not be included.

A.3.1.3.5 Examples of records. Examples of records, complying with the requirements of A.3.1.3.4 for instructions, shall be included in the program plan.

A.3.1.3.6 Manufacturer's internal instructions for internal visual inspection. The manufacturer's internal instructions for visual inspection before potting shall be included in the program plan.

RADIOGRAPHIC INSPECTION

B.1. SCOPE

B.1.1 This appendix contains details for performance of the radiographic inspection for devices specified in accordance with this standard. This appendix is a mandatory part of this standard. The information contained herein is intended for compliance only.

B.2. APPLICABLE DOCUMENTS

This section is not applicable to this appendix.

B.3. RADIOGRAPHIC INSPECTION

B.3.1 Radiographic inspection. Devices shall be tested in accordance with Method 209 of MIL-STD-202. The following details and exceptions shall apply:

a. Radiographic quality - The radiograph shall render a clear sharp image of the penetrameter.
b. Image quality indicator - A radiograph of the penetrameter shall be included on each radiograph film. The penetrameter may be made from a sample of the same type as that being radiographed, with an AWG number 48 tungsten wire mounted across the body.
c. For real time x-ray, the penetrameter shall be used on the first and last image of the inspection lot.

B.3.1.1 Transformers and inductors. Examples of typical construction and terminology are shown on Figure B-1.

B.3.1.1.1 Views - Radiographs shall be taken of each device in each of three axes; X, Y, and Z. When inadequate coverage is provided, additional views shall be taken as deemed necessary to satisfy the criteria defined herein. If three views are not feasible due to part construction, a minimum of two views shall be taken. Axial orientation is shown on Figure B-2.

B.3.1.1.2 Examination - The radiographic examination shall include, but not be limited to, inspection for extraneous materials, alignment, clearance and processing damage.

B.3.1.1.2.1 Extraneous material – There shall be no visible extraneous materials that can cause damage to insulation or electrical short circuit between conductors or connections. Loose or excessive material such as weld or solder splash, solder balls and short lengths of unattached wire shall be considered extraneous material (See Figure B-3). If the extraneous material is fully embedded in material with a measurable shore D hardness, and DWV testing has been performed to verify that the material does not cause damage or short circuit, it shall be considered acceptable.

Acceptable Conditions:

A. Extraneous material (as described above) that is located near a single wire or conductor, and cannot cause damage or short circuit, is acceptable. See Figure B3 (1 of 5) and Figure B3 (2 of 5).
B. Extraneous material (as described above) that is located near two or more conductors, and has.010” or greater between the conductors and extraneous material. See figure B3 (1 of 5).
C. Extraneous material (as described above) that is entrapped within a soft (RTV type) material, and is .125” or greater than from any two conductors.

Rejectable Conditions:

D. Extraneous material (as described above) that is less than .010" between any two conductors or wires, shall be rejectable, regardless of size. See Figure B3 (3 of 5) and Figure B3 (4 of 5).
E. Extraneous material (as described above) that is embedded within a soft compound, such as RTV, with less than .125" between the conductors and extraneous material. See Figure B3 (3 of 5) and Figure B3 (5 of 5).
F. Any unattached wire clipping within the coil assembly. See Figure B3 (4 of 5).

B.3.1.1.2.2 Alignment and clearances - Acceptable parts shall exhibit adequate internal electrical and mechanical clearances. Criteria for determining adequate clearance by inspection of radiographs shall be established by each manufacturer and must be approved by the qualifying activity, except as specified otherwise herein. Unacceptable alignment and clearances include the following:

a. Insufficient clearance between wires and metallic case, other conductive support, or external surfaces. See Figure B-4.
b. Lead wire under tension that can be subjected to further stress under thermal expansion. See Figure B-4(g).
c. Inadequate clearance of wires and installation holes, wherein the wires can be damaged in installation.
d. Inadequate clearance between adjacent terminals due to pigtails of the wires, or wire alignment.
e. Inadequate clearance between wires. See Figure B-4(b).

B.3.1.1.2.3. Processing damage - Unacceptable processing includes the following:

a. Raveled or frayed wire ends that can separate or pierce insulation, other wires or parts. See Figures B-5(a) and B-6(a).
b. Partially broken wire strands. Multiple strand wire in which one or more strands have separated. See Figure B-5(b).
c. Missing or incomplete soldering or welding of connections. See Figures B-5(c) and B-6(d).
d. Excess lengths of wires that are unsupported and can move freely under mechanical or thermal stress. See Figure B-5(d).
e. Unauthorized splices or repair of broken wires or terminals. See Figures B-5(e) and B-6(c).
f. Voids in encapsulant in contact with the lead between the coil and external surface that completely surround the wire or, although not surrounding the wire, extend greater than 20 percent of the distance from the coil to the external surface. See Figure B-5(f) and (g).
g. Cracked or damaged core. See figure B-6(f).
h. Encapsulation cracks that intersect any magnet wire gauge 30 or finer.

B.3.1.1.2.4 Miscellaneous - Cracked, broken or improperly assembled core, deformed or bent parts, and voids in the seal shall be cause to reject a part.

B.3.1.2 Radio frequency coils (Family 13).

B.3.1.2.1 Views. Two views, normal to the major axis of the part shall be taken. One view shall be 90 degrees from the other.

B.3.1.2.2 Examination. The coil examination shall include, but not be limited to, inspection for extraneous material on the windings or within the enclosure, misaligned or mispositioned core, misaligned electrodes and physical damage to the windings of the coil.

B.3.1.2.2.1 Cracked or damaged core. The core shall show no evidence of being cracked or otherwise damaged. See figure B-7(a).

B.3.1.2.2.2 Extraneous material. There shall be no loose or attached extraneous material 0.002 inches (.0508 mm) or larger in size located within .005 of any bare conductor, solder joint or terminal. See figure B-7(b).

B.3.1.2.2.3 Misaligned leads. The center line of the leads shall not form an angle greater than 5 degrees. See figure B-7(c).

B.3.1.2.2.4 Windings. There shall be no excessively loose turns visible on the coil. A separation of 0.010 inches or more between a winding and the next inner layer of winding shall be considered excessive. See figure B-7(d).

B.3.1.2.2.5 Misaligned core. The core shall be aligned with 5 degrees of a line connecting the centers of the two electrical connections. See figure B-7(e).

B.3.1.2.2.6 Damaged magnet wire. The magnet wire shall show no evidence of being chipped, nicked or other wise damaged. See figure B-7(f).

B.3.2.2 Radio Frequency Chip Coils, (Family 50), (MIL-PRF-83446/04 and MIL-PRF-83446/38).

B.3.2.2.1 Views. Two views, normal to the major axis of the part shall be taken. One view shall be 90 degrees from the other.

B.3.2.2.2 Examination. The coil examination shall include, but not be limited to, inspection for extraneous material on the windings or within the enclosure, misaligned or mispositioned core, misaligned electrodes and physical damage to the windings of the coil.

B.3.2.2.2.1 Cracked or damaged core. The core shall show no evidence of being cracked or otherwise damaged. See figure B-8(a).

B.3.2.2.2.2 Damaged electrical connection. The magnet wire shall show no evidence of being lifted or not connected to the termination See figure B-8(b).

B.3.2.2.2.3 Exposed core. There shall be no evidence of the core being exposed through the encapsulant. See figure B-8(c).

B.3.2.2.2.4 Damaged magnet wire. The magnet wire shall show no evidence of being chipped, nicked or otherwise damaged. See figure B-8(d).

B.3.2.2.2.5 Extraneous material. There shall be no loose or attached extraneous material 0.002 inches (.0508 mm) or larger in size on the windings or within the enclosure. See figure B-8(e).

B.3.2.2.2.6 Windings. There shall be no excessively loose turns visible on the coil. A separation of 0.010 inches or more between a winding and the next inner layer of winding shall be considered excessive.

B.3.2.3 Radio Frequency Chip Coils, Family 50, (MIL-PRF-83446/20 through /35 and /39 and /40).

B.3.2.3.1 Views. Two views, normal to the major axis of the part shall be taken. One view shall be 90 degrees from the other.

B.3.2.3.2 Examination. The coil examination shall include, but not be limited to, inspection for extraneous material on the windings or within the enclosure, misaligned or mispositioned core, misaligned electrodes and physical damage to the windings of the coil.

B.3.2.3.2.1 Cracked or damaged core. The core shall show no evidence of being cracked or otherwise damaged. See figure B-9(a).

B.3.2.3.2.2 Damaged electrical connection. The magnet wire shall show no evidence of being not connected to the termination See figure B-9(b).

B.3.2.3.2.3 Exposed core. There shall be no evidence of the core being exposed through the encapsulant. See figure B-9(c).

B.3.2.3.2.4 Damaged magnet wire. The magnet wire shall show no evidence of being chipped, nicked or otherwise damaged. See figure B-9(d).

B.3.2.3.2.5 Extraneous material. There shall be no loose or attached extraneous material 0.002 inches (.0508 mm) or larger in size on the windings or within the enclosure. See figure B-9(e).

B.3.2.3.2.6 Windings. There shall be no excessively loose turns visible on the coil. A separation of 0.010 inches or more between a winding and the next inner layer of winding shall be considered excessive.

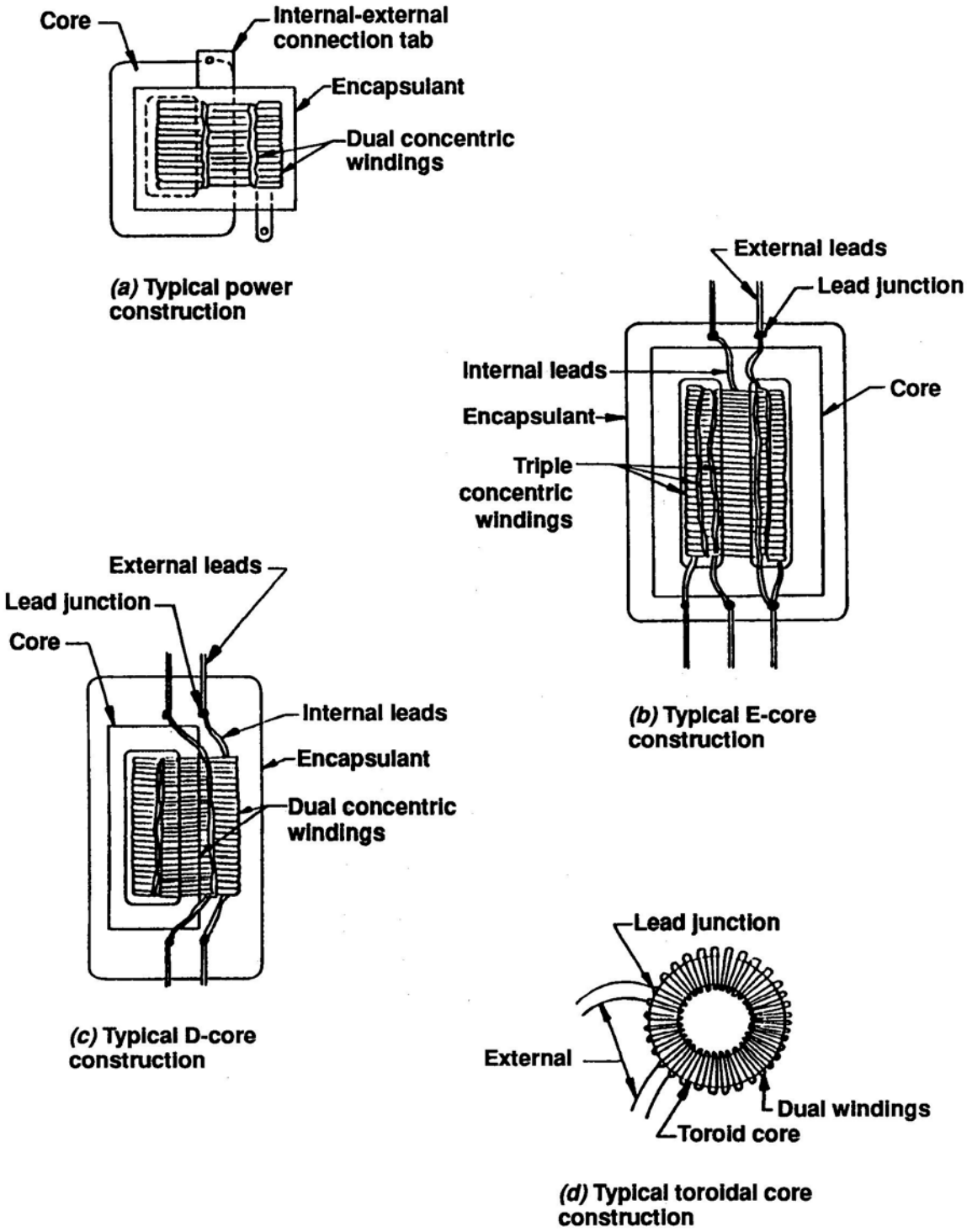

FIGURE B-1 (1 of 3). A typical transformer/inductor construction (see B.3.1.1).

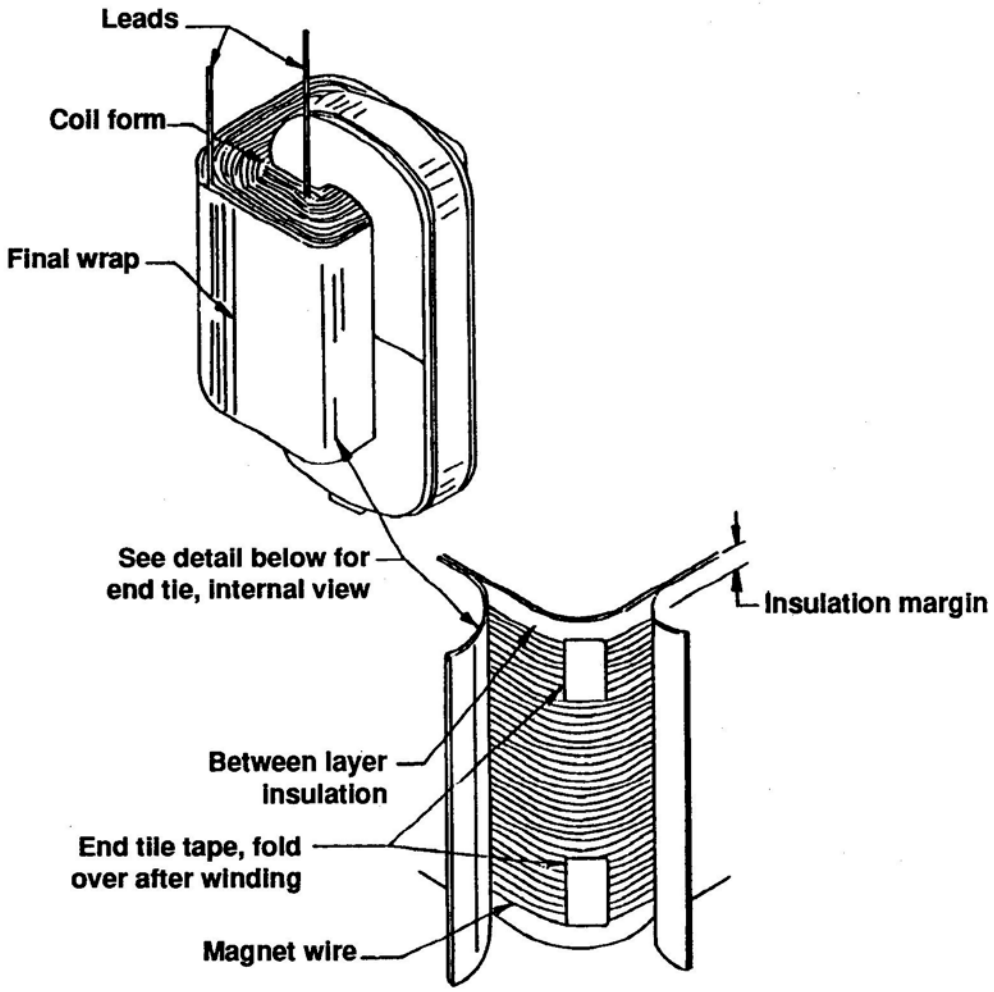

FIGURE B-1 (2 of 3). A typical transformer/inductor construction (see B.3.1.1).

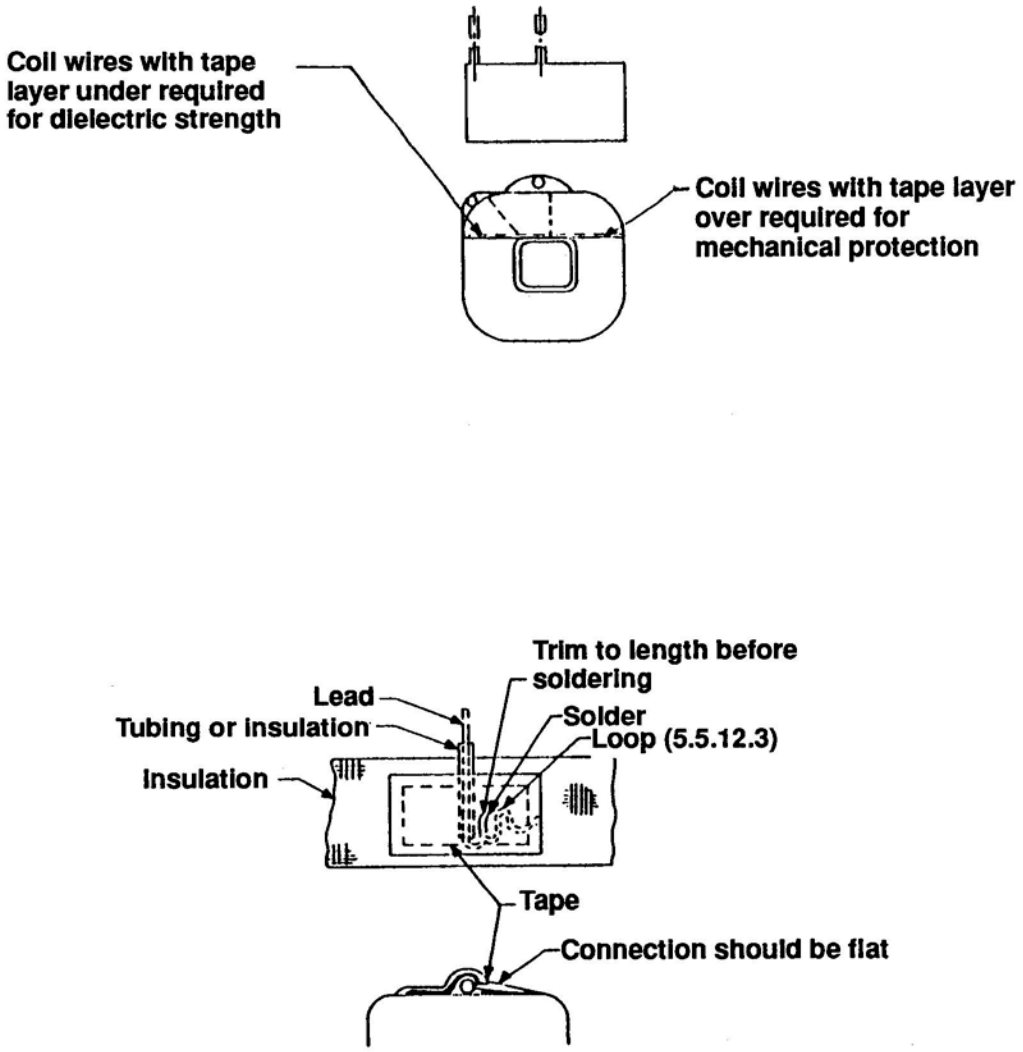

FIGURE B-1 (3 of 3). A typical transformer/inductor construction (see B.3.1.1).

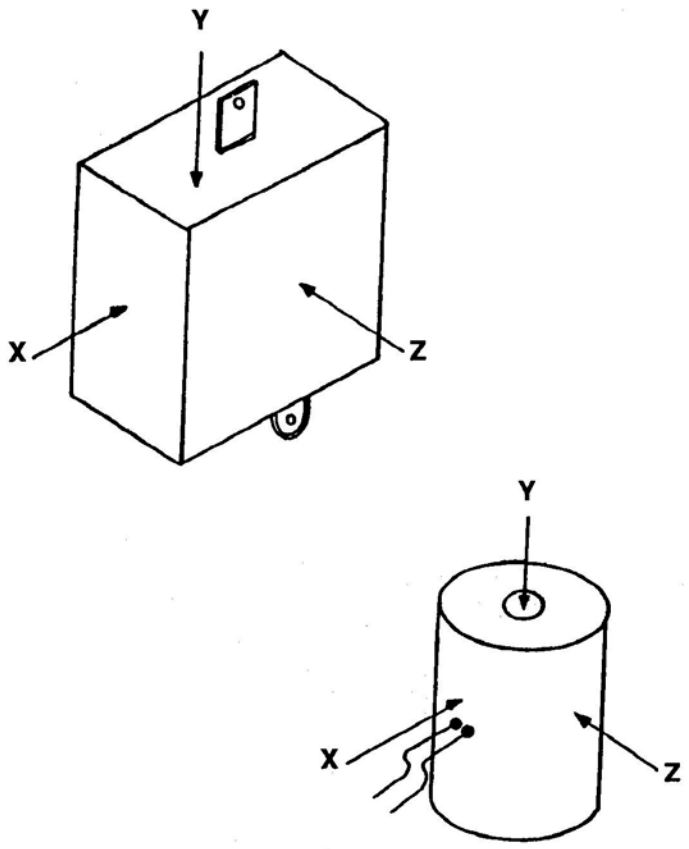

FIGURE B-2. Axial orientation (see B.3.1.1.1).

ACCEPTABLE CONDITIONS:

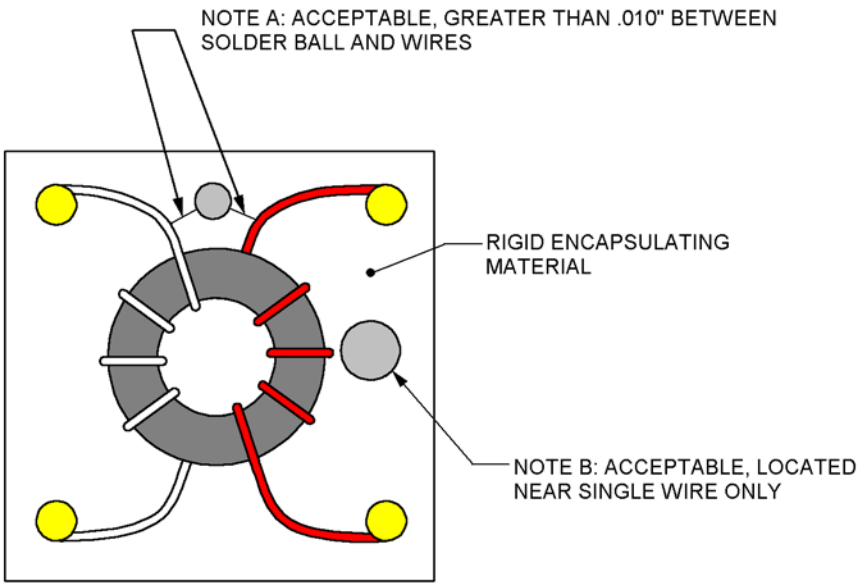

FIGURE B-3 (1 of 5). Acceptable/rejectable extraneous material (see B.3.1.1.2.1).

ACCEPTABLE

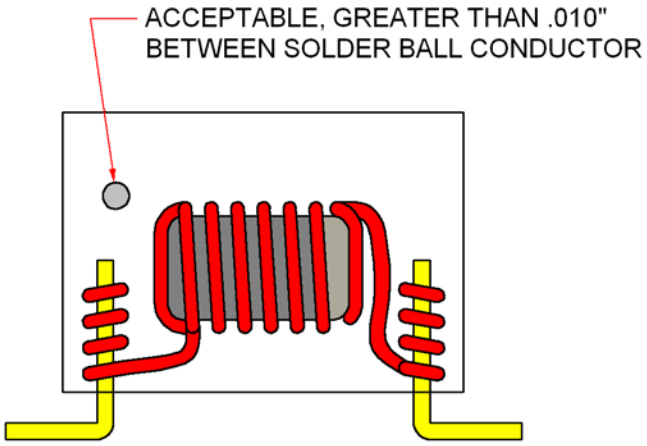

FIGURE B-3 (2 of 5). Acceptable/rejectable extraneous material (see B.3.1.1.2.1).

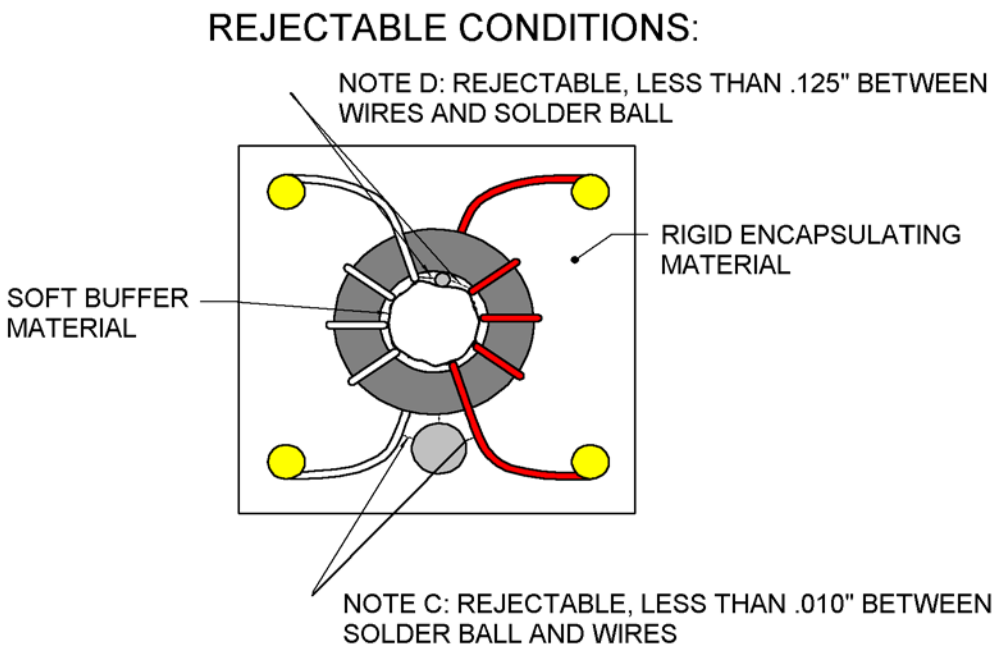

FIGURE B-3 (3 of 5). Acceptable/rejectable extraneous material (see B.3.1.1.2.1).

REJECTABLE

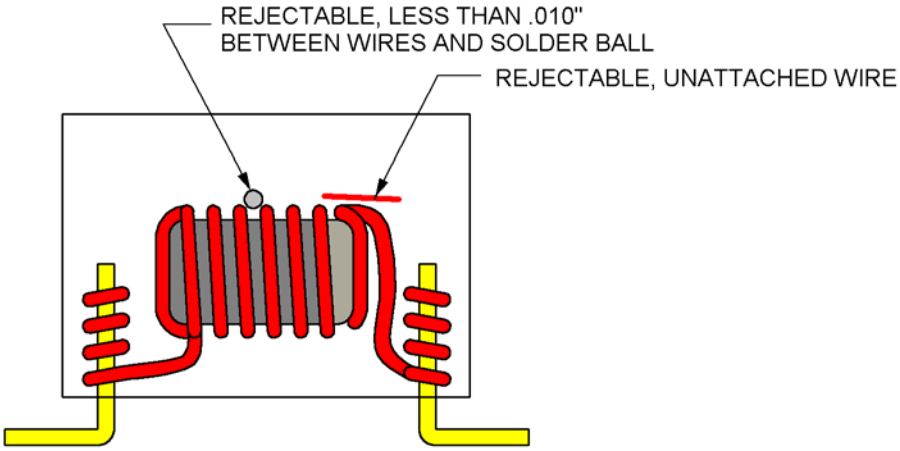

FIGURE B-3 (4 of 5). Acceptable/rejectable extraneous material (see B.3.1.1.2.1).

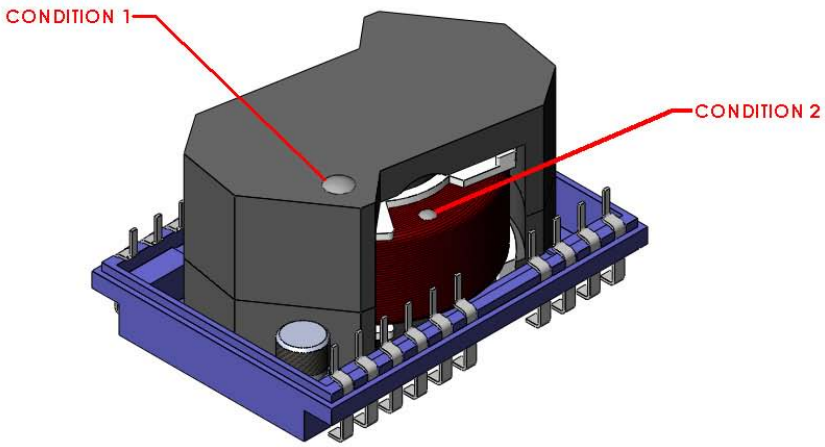

Note: This drawing depicts a transformer that is coated with a soft (RTV) material, and is then encapsulated with a hard (Shore D measurable) material.

This criteria applies only to particles that are verified to be entrapped within the soft material.

Condition 1: Acceptable – Particle is entrapped within soft material, and is located greater than .125” from any conductor.

Condition 2: Rejectable – Particle is entrapped within soft material, and is located less than .125” from any conductor.

FIGURE B-3 (5 of 5). Acceptable/rejectable extraneous material (see B.3.1.1.2.1).

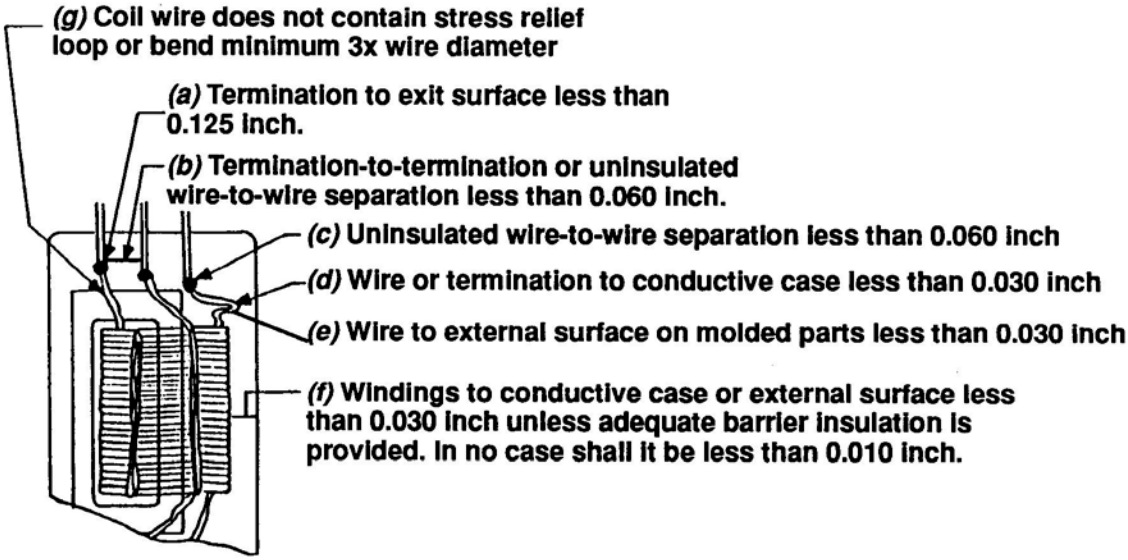

FIGURE B-4. Unacceptable alignment and clearances (see B.3.1.1.2.2).

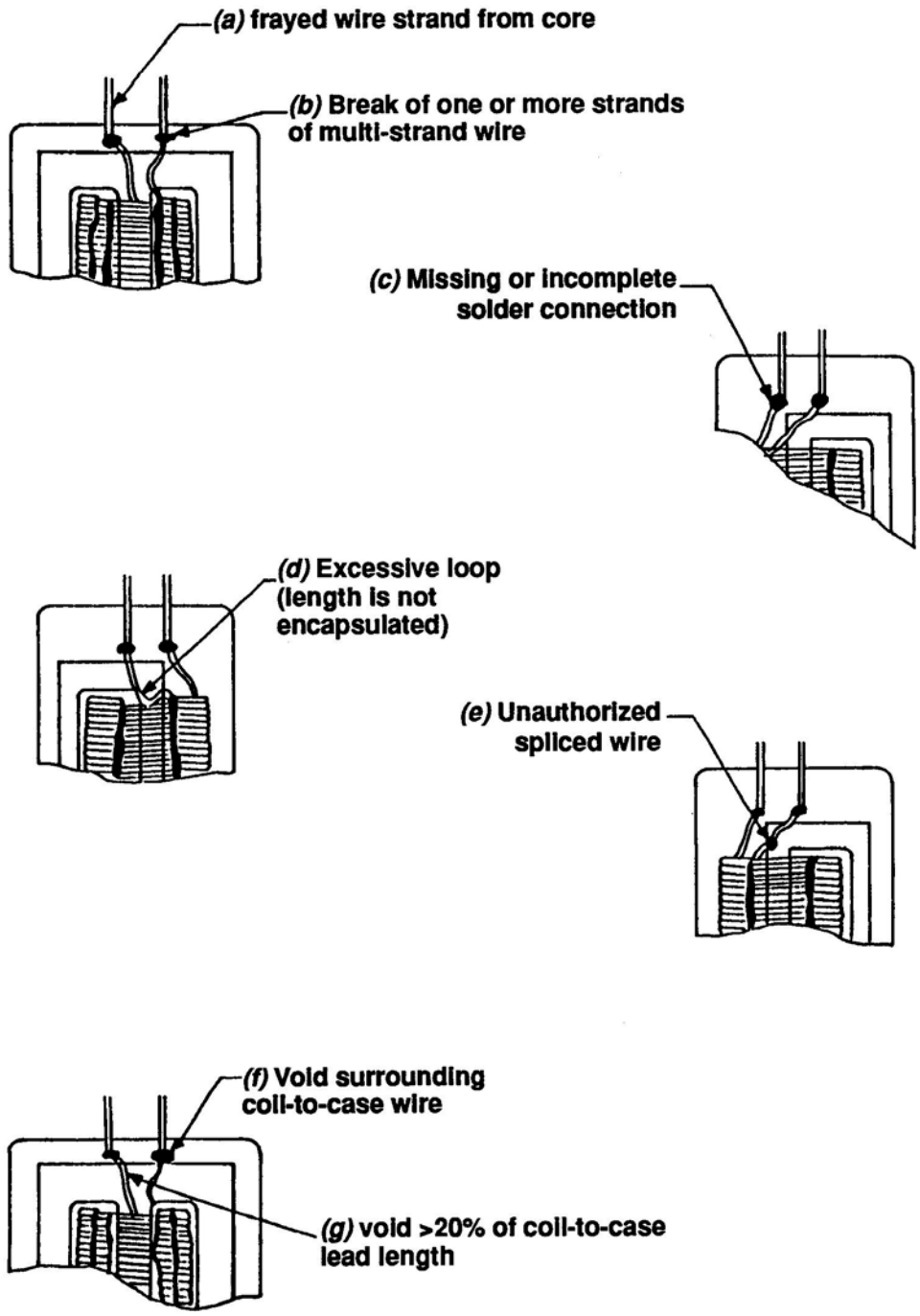

FIGURE B-5. Unacceptable processing (see B.3.1.1.2.3).

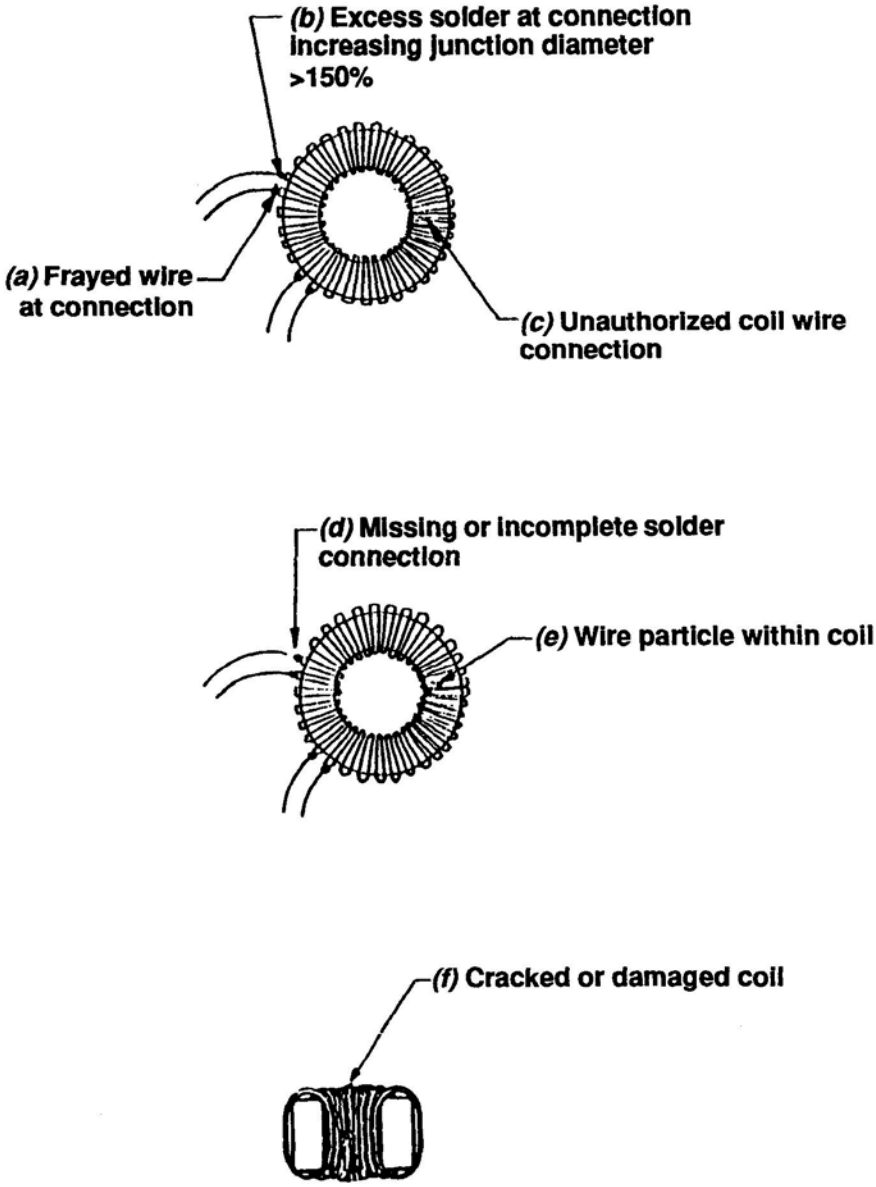

FIGURE B-6. Unacceptable processing damage – toroidal core (see B.3.1.1.2.3).

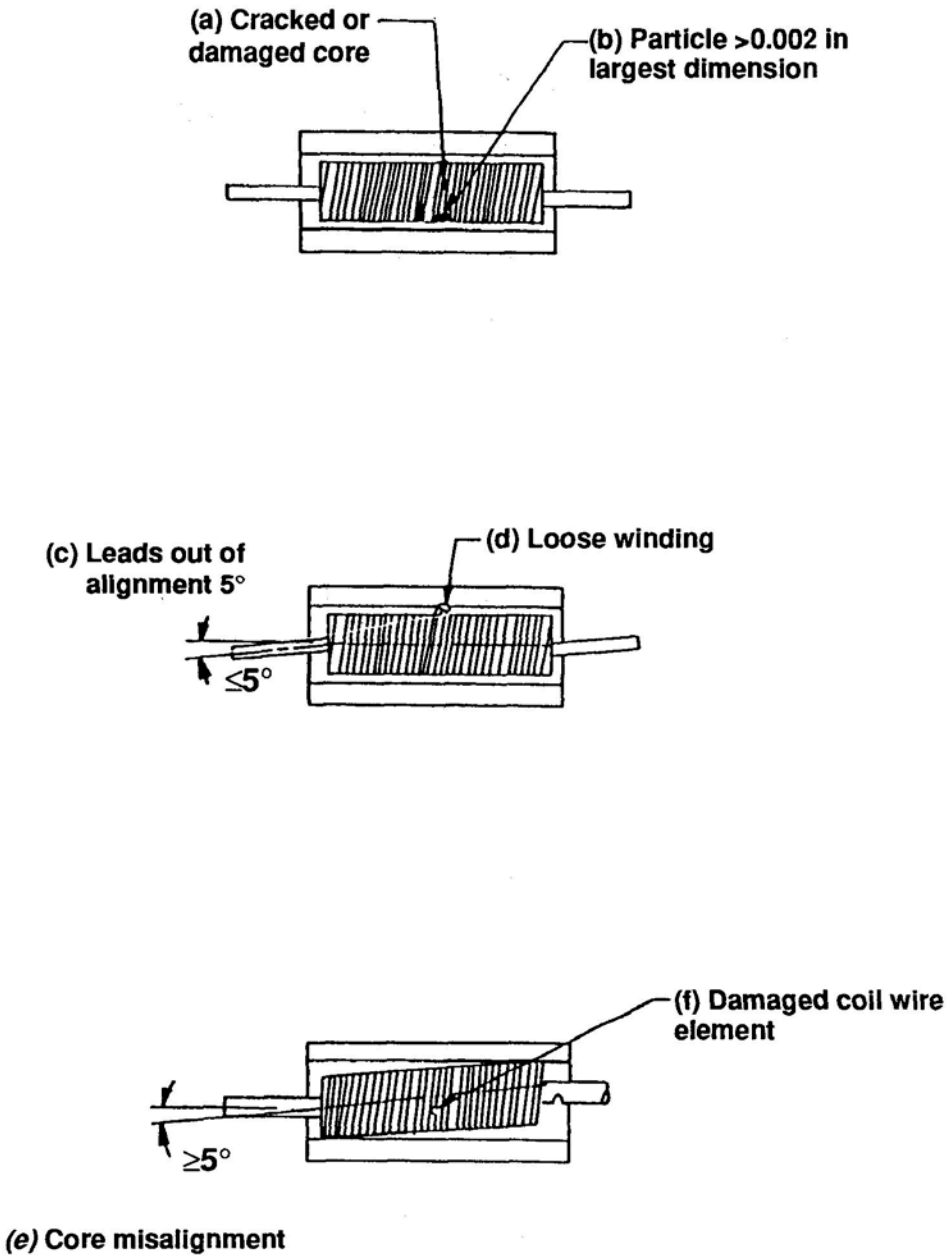

FIGURE B-7. Unacceptable workmanship for radio frequency coils (see B.3.1.2.2).

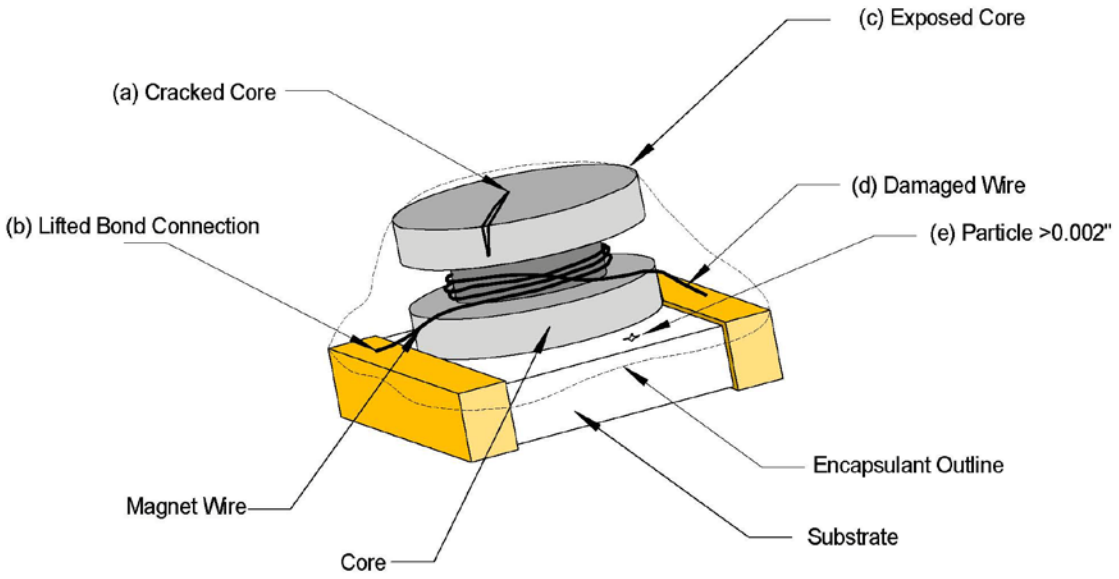

FIGURE B-8. Unacceptable workmanship for radio frequency chip coils (see B.3.2.2)

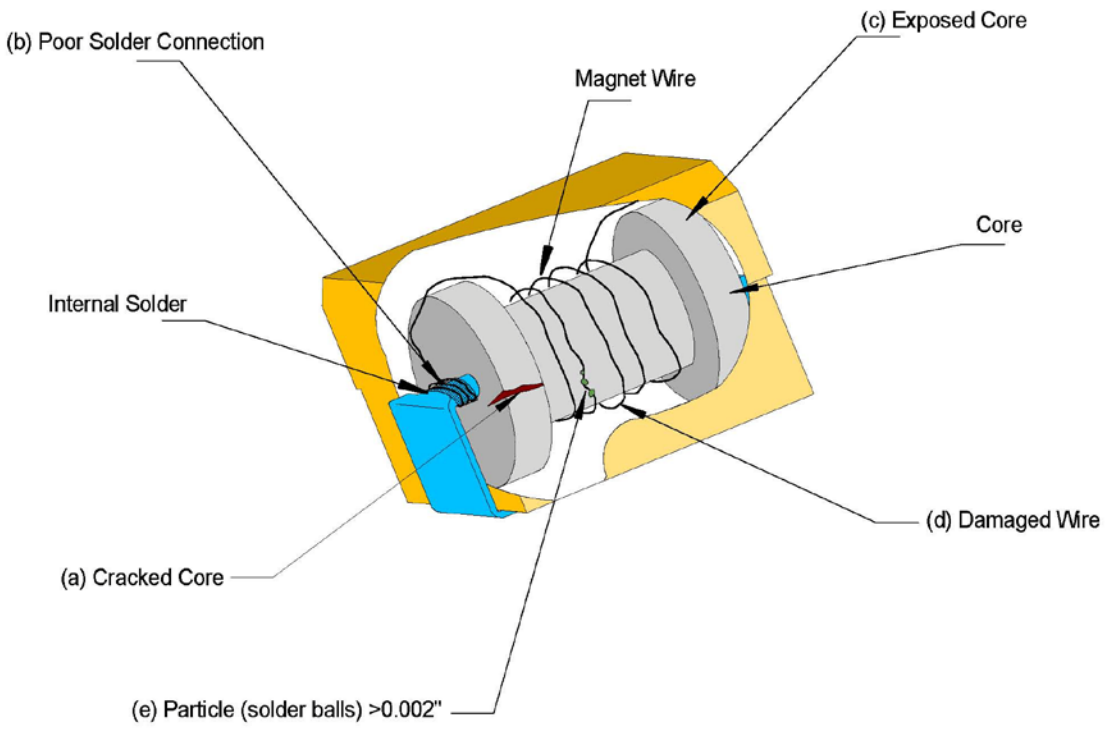

FIGURE B-9. Unacceptable workmanship for radio frequency chip coils (see B.3.2.3)

CONCLUDING MATERIAL

Custodians:
NASA - NA
Air Force - 19
DLA - CC

Preparing activity:
DLA - CC

(Project No. 5950-2009-001)

NOTE: The activities listed above were interested in this document as of the date of this document. Since organizations and responsibilities can change, you should verify the currency of the information above using the ASSIST Online database at https://assist.daps.dla.mil.