Downloaded from http://www.everyspec.com

MIL-STD-650
3 August 1962

MILITARY STANDARD

EXPLOSIVE: SAMPLING, INSPECTION AND TESTING

FSC 1375

Downloaded from http://www.everyspec.com

DEPARTMENT OF DEFENSE

ARMED FORCES SUPPORT CENTER

WASHINGTON 25, D. C.

EXPLOSIVE : SAMPLING, INSPECTION AND TESTING

MIL-STD-650 3 AUGUST 1962

1. This standard has been approved by the Department of Defense and is mandatory for use by the Departments of the Army, the Navy, and the Air Force, effective 3 August 1962.

2. Recommended corrections, additions, or deletions should be addressed to Headquarters, DSA, Standardization Division, Washington 25, D. C.

Downloaded from http://www.everyspec.com

CONTENTS

Page

ALPHABETICAL INDEX OF TEST METHODS iii
NUMERICAL INDEX OF TEST METHODS vi
INTRODUCTION 1
SAMPLING AND INSPECTION 3
TESTING 5
TEST METHODS vi

Group 100 — General Test Methods
200 — Physical Test Methods
300 — Sample Preparation
400 — Chemical Test Methods
500 — Stability, Sensitivity and Surveillance Test
600 — Standard Solution
700 — Standard Indicators

ALPHABETICAL INDEX OF TEST METHODS

Title	Method No.
Acidity or Alkalinity (Hot Aqueous Extraction Method)	102.1
Acidity or Alkalinity (Cold Extraction Method)	102.2
Acidity or Alkalinity (Complete Solution Method)	102.3
Ammoniacal Nitrogen	403.2
Ammoniacal Nitrogen (Kjeldahl Method)	403.1
Ammonium Thiocyanate Indicator Solution (20 percent)	707.1
Antimony Sulfide (Potassium Bromate Method)	401.1
Ash	107.1
Average Particle Diameter (Fischer Sub-Sieve Sizer)	205.1
Barium Diphenylamine Sulfonate Indicator Solution	705.1
Barium Salts (Chromate Method)	404.1
Barium Salts (Sulfate Method)	405.1
Brisance	508.1
Bulk or Apparent Density (Dry Method)	201.3
Bulk or Apparent Density (Standard Vessel Method)	201.1
Bulk or Apparent Density (Wet Method)	201.2
Density (in Vacuo)	202.1

Downloaded from http://www.everyspec.com

ALPHABETICAL INDEX OF TEST METHODS-Continued

Title	Method No.
Dissolution	301.1
Dissolution-Extraction	301.2
Explosion Temperature Test	506.1
Extraction	301.3
Ferric Ammonium Sulfate (0.15N Standard Solution)	603.1
Granulation (Dry)	204.1
Granulation (Wet)	204.2
100”C. Heat Test Method	502.1
Hydrochloric Acid (0.lN Standard Solution)	601.1
Hygroscopicity (Equilibrium Method)	208.1
Ignition	301.8
Impact Sensitivity Test (U.S. Bureau of Mines Apparatus)	505.1
Initiating Efficiency (Sand Test Method)	509.1
Inorganic Chlorides	406.1
Insoluble Material (Solvent Insoluble Method)	105.1
Insoluble Particles or Grit (Solvent Extraction Method)	106.1
75° C. International Test Method	501.1
Leaching	301.4
Lead Azide (Audiometer Method)	407.1
Lead Styphnate, Normal (Spectrophotometric Method)	408.1
Melting Point (Capillary)	209.1
Mercury Fulminate	410.1
Methyl Orange Indicator Solution	704.1
Methyl Red Indicator Solution	702.1
Moisture (Karl Fischer Method)	101.4
Moisture (Desiccation Method)	101.2
Moisture (Dish and Cone Method)	101.1
Moisture (Distillation Method)	101.3
Moisture and Volatiles (Oven Method)	101.5
Moisture and Volatiles (Vacuum Oven Method)	101.6
Multiple Solvent Extraction	301..7
Nitrogen Content	414.1
Nitro-Nitrogen Content (Titanous Chloride Method)	409.1
Organic Destruction and Sample Dissolution	301.5
Particle Size (Microscopic)	206.1

Downloaded from http://www.everyspec.com

ALPHABETICAL INDEX OF TEST METHODS-Continued

Title	Method No.
Phenolphthalein Indicator Solution	703.1
pH Value (Electrometric Method)	103.1
Plasticity (Elongation)	211.1
Plasticity (Modulus of Compressibility)	211.1
Potassium Bromate (0.05N Standard Solution)	610.1
Reactivity Test	504.1
Setting	207.1
Sensitivity to Initiation (Sand Test Method)	507.1
Sodium Diphenyl Benzidine Sulfonate Indicator Solution	706.1
Sodium Hydroxide (0.lN Standard Solution)	602.1
Sodium (Magnesium Uranyl Acetate Method)	417.1
Sodium Thiosulfate (0.lN Standard Solution)	613.1
Solidification Point	210.1
Volubility (Leaching Method)	104.1
Solvent Extraction (Selective Solvent Method)	108.1
Soxhlet Extraction	301.6
Specific Gravity (Bottle Method)	203.2
Specific Gravity (Mercury Displacement)	203.1
Starch Indicator Solutitm	701.1
Sulfate	411.1
Sulfuric Acid (0.lN Standard Solution)	612.1
Tetracene (Polarograph Method)	416.1
Titanous Chloride (0.2N Standard Solution)	605.1
Total Lead (Chromate Method)	402.2
Total Lead (Sulfate Method)	402.1
Trinitrotoluene	413.1
Trinitrotoluene (in Tetrytol)	413.2
100° C. and 120° C. Vacuum Stability Test	503.1
Viscosity (Efflux)	212.1

Downloaded from http://www.everyspec.com

NUMERICAL INDEX OF TEST METHODS

Group 100— General Test Methods

Method No.

101.1 Moisture (Dish and Cone Method)
101.2 Moisture (Desiccation Method)
101.3 Moisture (Distillation Method)
101.4 Moisture (Karl Fischer Method)
101.5 Moisture and Volatiles (oven Method)
101.6 Moisture and Volatiles (Vacuum Oven Method)
102.1 Acidity or Alkalinity (Hot Aqueous Extraction Method)
102.2 Acidity or Alkalinity (Cold Aqueous Extraction Method)
102.3 Acidity or Alkalinity (Complete Solution Method)
103.1 pH Value (Electrometric Method)
104.1 Solubi!ity (Leaching Method)
105.1 Insoluble Material (Solvent Insoluble Method)
106.1 Insoluble Particles or Grit (Solvent Extraction Method)
107.1 Ash
108.1 Solvent Extraction (Selective Solvent Method)

Group 200 —Physical Test Methods

Method No.

201.1 Bulk or Apparent Density (Standard Vessel Method)
201.2 Bulk or Apparent Density (Wet Method)
201.3 Bulk or Apparent Density (Dry Method)
202.1 Density (in Vacuo)
203.1 Specific Gravity (Mercury Displacement)
203.2 Specific Gravity (Bottle Method)
204.1 Granulation (Dry)
204.2 Granulation (Wet)
205.1 Average Particle Diameter (Fisher Sub-Sieve Sizer)
206.1 Particle Size (Microscopic)
207.1 Settling No.
208.1 Hygroscopicity (Equilibrium Method)
209.1 Melting Point (Capillary)
210.1 Solidification Point
211.1 Plasticity (Elongation)
211.2 Plasticity (Modulus of Compressibility)
212.1 Viscosity (Efflux)

Downloaded from http://www.everyspec.com

NUMERICAL INDEX OF TEST METHODS-Continued

Group 300 — Sample Preparation

Method **No.**

301.1 Dissolution
301.2 Dissolution — Extraction
301.3 Extraction
301.4 Leaching
301.5 Organic Destruction and Sample Dissolution
301.6 Soxhlet Extraction
301.7 Multiple Solvent Extraction
301.8 Ignition

Group 400 — Chemical Test Methods

Method **No.**

401.1 Antimony Sulfide (Potassium Bromate Method)
402.1 Total Lead (Sulfate Method)
402.2 Total Lead (Chromate Method)
403.1 Ammoniacal Nitrogen (Kjeldahl Method)
403.2 Ammoniacal Nitrogen
404.1 Barium Salts (Chromate Method)
405.1 Barium Salts (Sulfate Method)
406.1 Inorganic Chlorides
407.1 Lead Azide (Audiometer Method)
408.1 Lead Styphnate Normal (Spectrophotometric Method)
409.1 Nitro-Nitrogen Content (Titanous Chloride Method)
410.1 Mercury Fulminate
411.1 Sulfates
413.1 Trinitrotoluene
413.2 Trinitrotoluene (in Tetrytol)
414.1 Nitrogen Content
416.1 Tetracene (Polarograph Method)
417.1 Sodium (Magnesium Uranyl Acetate Method)

Group 500 — Stability, Sensitivity and Surveillance Tests

Method No.

501.1 75° C. International Test Method
602.1 100° C. Heat Test Method
603.1 100° C. and 120°C. Vacuum Stability Test

Downloaded from http://www.everyspec.com

NUMERICAL INDEX OF TEST METHOD-Continued

Method No.

504.1 Reactivity Test

605.1 Impact Sensitivity Test (U.S. Bureau of Mines Appuatus)

506.1 Explosion Temperature Test

607.1 Sensitivity to Initiation (Sand Test Method)

508.1 Brisance

509.1 Initiating Efficiency (Sand Test Method)

Group 600 — Standard Solutions

Method No.

601.1 Hydrochloric Acid (0.lN Standard Solution)

602.1 Sodium Hydroxide (0.lN Standard Solution)

603.1 Ferric Ammonium Sulfate (0.15N Standard Solution)

606.1 Titanous Chloride (0.2N Standard Solution)

610.1 Potassium Bromate (0.05N Standard Solution)

612.1 Sulfuric Acid (0.lN Standard Solution)

613.1 Sodium Thiosulfate (0.lN Standard Solution)

NUMERICAL INDEX OF INDICATOR SOLUTIONS

Group 700 — Standard Indicators

Method No.

701.1 Starch Indicator Solution

702.1 Methyl Red Indicator Solution

703.1 Phenolphthalein Indicator Solution

704.1 Methyl Orange Indicator Solution

705.1 Barium Diphenylmine Sulfonate Indicator Solution

706.1 Sodium Diphenylbetidine Sulfonate Indicator Solution

707.1 Ammonium Thiocyanate Indicator Solution

Downloaded from http://www.everyspec.com

SECTION 1
INTRODUCTION

1. SCOPE.

l.1 This standard describes the general methods of sampling, inspecting, and testing explosives for conformance with the material requirements of the applicable explosive specification. In the event of conflict between these methods and those in the applicable explosive specification, the latter shall take precedence.

2. REFERENCED DOCUMENTS.

2.1 The following documents of the issue in effect on date of invitations for bids form a part of this specification to the extent specified herein.

O-A-51 — Acetone

O-C-141 — Carbon tetrachloride; technical grade

RR-S-366 — Sieves, standard for testing purposes

JAN-A-465 — Acid, acetic (for Ordnance use)

JAN-E-199 — Ether, diethyl

MIL-E-463 — Alcohol, Ethyl (for Ordnance use)

(Copies of specification required by contractors in connection with specified procurement function should be obtained from the procuring activity or as directed by the contracting officer.)

Downloaded from http://www.everyspec.com

Downloaded from http://www.everyspec.com

SECTION 2
SAMPLING AND INSPECTION

1. SCOPE.

1.1 This section specifies the procedures for sampling high explosives.

2. SAMPLING.

2.1 Select the required test samples from each lot of the high explosive after the high explosive has been packed and sealed for shipment or as stated in the applicable specification.

Caution: Exercise extreme cleanliness in handling high explosive samples, especially those required for chemical and physical tests. Avoid touching the high explosive with damp or soiled hands.

2.2 Select only samples that are representative of the lot of the high explosive.

3. PACKING and MARKING.

3.1 Packing. Transfer samples to approved air-tight containers and seal the containers immediately. Keep the containers sealed and stored in a safe location at room temperature until ready for testing. Pack high explosive samples as specified in the applicable specification.

3.2 Marking. Label each high explosive with the following information.

a. Explosive designation

b. Lot No.

c. Pounds in the lot

d. Manufacturer's name and plant designation

e. Contract number

f. Date loaded

4. TEST SPECIMENS.

4.1 Ballistic samples. Select samples as specified in the applicable high explosive specifications.

4.2 Chemical and physical test samples. Select high explosive samples as specified in the applicable specifications reserving a portion of these samples for stability testing when required.

5. INSPECTION.

5.1 Before testing the explosive inspect the sample container to see that it is not broken, unstoppered or otherwise damaged. Also check that it has been labeled correctly. Discard the contents of damaged or improperly labeled container, and report the condition to the Government inspector (or other proper official) at the plant.

Downloaded from http://www.everyspec.com

Downloaded from http://www.everyspec.com

SECTION 3
TESTING

1. SCOPE.

1.1 This section contains the physical and chemical tests for explosives. It also includes directions for preparing standard and indicator solution to be used in the determinations.

13/14

1.2 Each test, as well as each procedure for preparing the special solutions, is considered as a separate Method, and is assigned an individual Method number.

2. NUMBERING SYSTEM.

2.1 Test method groups. Methods are arranged in seven groups according to category of test or type of solution. These groups are identified numerically by hundreds. Tests of a general nature are in the 100 group; physical tests are in the 200 group; sample preparation in the 300 group, and so on.

2.2 Basic numbers, Method numbers in each group are arranged in subgroups, according to the ingredient or property to be determined. Differences in the method of determination are differentiated by the addition of tenths decimals to the subgroup numbers to form basic numbers, such as 102.1, 102.2, and 102.3. (These are the basic numbers for three different methods for determining the acidity and alkalinity to the explosive. The basic number of a test method is its official designation, and should be used without revision number whenever it is referenced. It always refers to the same method of determination, the same accuracy, and the same end result, regardless of revision status.

2.3 Revision numbers. Revision numbers appear as second tenths decimals to the subgroup numbers. (For example, “Method 102.1.2” would denote the second revision of Method 102.1.) Revision numbers are assigned to basic numbers when minor changes are made in the Method to clarify it or to give additional details that will increase the reproducibility y of the test results. Major changes in a Method, which would significantly alter the method of testing, or affect the accuracy or end result of the test, is considered ground for assigning a new basic number.

2.4 Suffix (T). The suffix (T) is used to denote a tentative status of the test. This tentative status is applied to newly developed tests, and is retained until the Method has been adopted as standard. A Method adopted without change retains its basic number only; and a Method adopted with changes is assigned a revision number.

Downloaded from http://www.everyspec.com

Downloaded from http://www.everyspec.com

METHOD 101.1
MOISTURE (DISH AND CONE METHOD)

1. SCOPE.

1.1 This method is used for determining the moisture of explosive mixtures that contain components that volatilize at 100°C. (such as Composition B and Cyclotol). The cone is intended to prevent the loss of the volatiles by condensing any that volatilized.

2. SPECIMEN.

2.1 The specimen shall consist of approximately 5 gm. of the explosive material, weighed to within 0.2 mg. The materiaI shouId pass through a U.S. Standard Sieve No. 4 and be retained on a U.S. Standard Sieve No. 10.

3. APPARATUS.

3.1 Closed steam plate, temperature 100°± 5°.

3.2 Aluminum dish with glass cone (fig. 1).

4. PROCEDURE.

4.1 Heat the dish and cone on a closed steam plate at 100° ± 5°C. for 30 minutes, Cool in air for 20 minutes.

4.2 Place the specimen in the dish, replace the cone, weigh the whole assembly.

4.3 Heat the assembly on a closed steam bath at 100° ± 5°C. for 2 hours and cool as before (par. 4.1).

4.4 Reweigh the assembly to determine the 1oss in weight, and calculate the loss as the percentage of moisture in the explosive specimen.

4.5 Calculation.

$$\text{Percent moisture} = \frac{100A}{B}$$

where:

A = loss in weight, gm.

B = weight of sample, gm.

Downloaded from http://www.everyspec.com

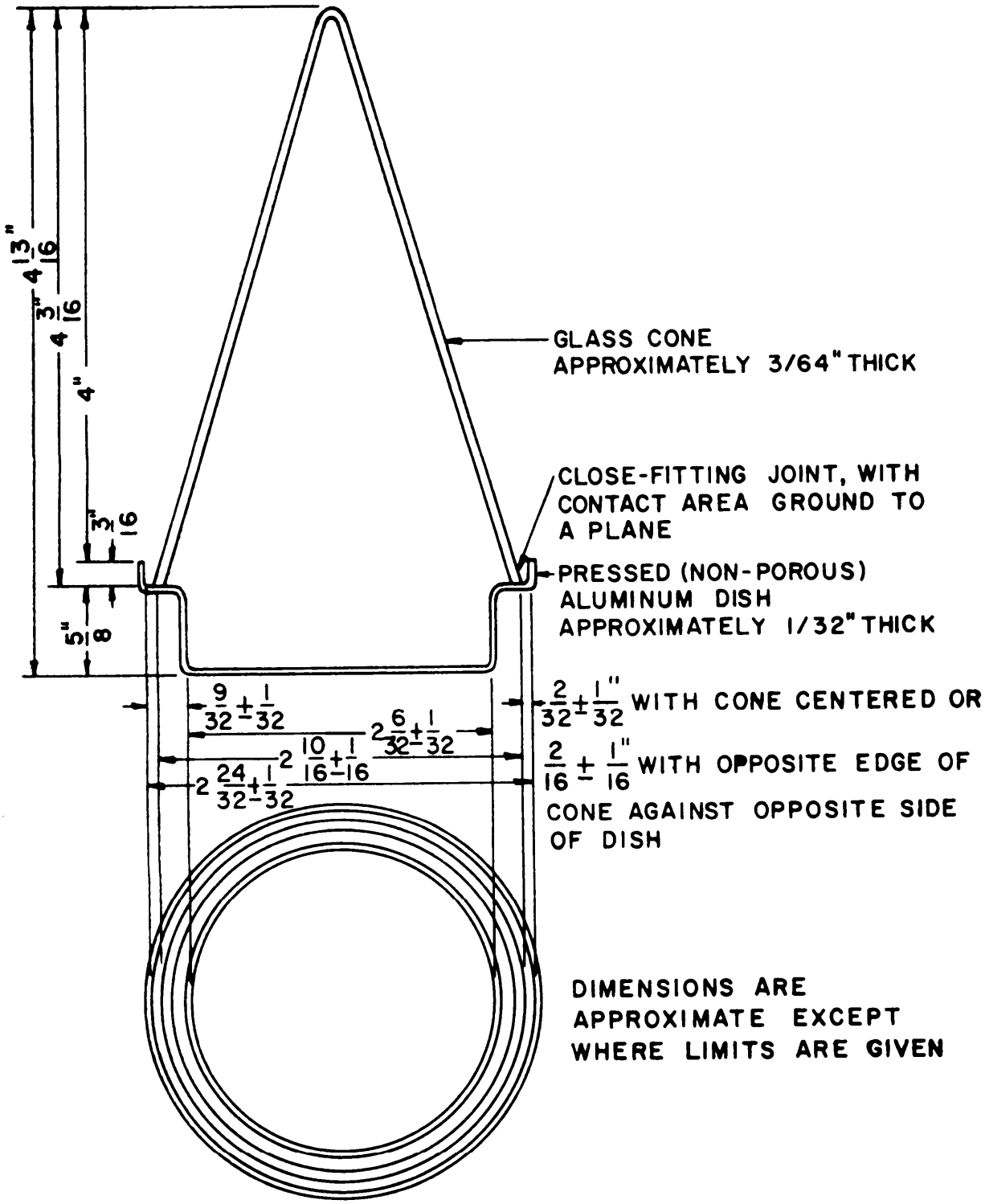

FIGURE 1. *Aluminum dish with glass cover.*

Downloaded from http://www.everyspec.com

METHOD 101.2
MOISTURE (DESICCATION METHOD)

1. SCOPE.

1.1 This method is used for determining the moisture content of solventless explosives on a basis of loss of weight in a desiccated atmosphere. It is used on single and multi-component explosives where it is undesirable to use heat, due to the sensitivity and/or volatility of the explosive material being tested.

2. SPECIMEN.

2.1 The specimen shall consist of approximately 0.4 to 0.7 gm. weighed to within 0.2 mg.

3. APPARATUS.

3.1 Weighing dish (aluminum or glass) ; diameter 60mm; depth 30mm.

3.2 Desiccator containing a suitable desiccant such as calcium chloride.

4. PROCEDURE.

4.1 Place the specimen in weighing dish and weigh the dish, contents and stopper.

4.2 Remove the stopper and place the dish in the desiccator and maintain at a temperature of 25° ± 5°C.

Note. To shorten the period of drying, vacuum may be applied to the desiccator after placing the specimen and weighing dish in it. Evacuate the ***vacuum*** desiccator to a pressure of 380 mm plus or minus 20 mm of mercury and maintain at 25° ± 5° C. Results obtained in this manner are usually reported as Loss on Vacuum Desiccation, percent.

4.3 Weigh the stoppered dish and' contents at 24 hour intervals until loss in weight between weighings does not exceed one milligram.

4.4 Determine the loss in weight and calculate the loss as the percentage of moisture in the specimen.

4.5 Calculation.

$$\text{Percent moisture} = \frac{A\ 100}{B}$$

where:

A = loss in weight, gm.

B = weight of sample, gm.

Downloaded from http://www.everyspec.com

Downloaded from http://www.everyspec.com

METHOD 101.3
MOISTURE (CARBON TETRACHLORIDE DISTILLATION METHOD)

1. SCOPE.

1.1 This method is used to determine moisture in an explosive, when appreciable amount of moisture is present and a relatively large amount of sample is available.

2. SPECIMEN.

2.1 The specimen shall consist of approximately 50 gm. of explosive. Weighed within 10 mg.

3. APPARATUS.

19

3.1 Round bottom "Balloon Type Flask" with a short ring neck, 500 ml.

3.2 Condenser (Liebig Type), 250 mm Straight tube with the lower end cut obliquely.

3.3 Drying tube containing calcium chloride.

3.4 Steam, hot water or oil bath.

3.5 Moisture tube (fig. 1) cleaned with bichromate cleaning solution.

4. MATERIALS.

4.1 Carbon tetrachloride (O–C-141) dried over calcium chloride.

5. PROCEDURE.

5.1 Place the specimen in the 500 ml balloon flask and add 200 ml of carbon tetrachloride.

5.2 Connect the flask with the moisture tube. Connect a calcium chloride tube to the top of the condenser to keep out atmospheric moisture.

5.3 Maintain a sufficient stream of cold water through the condenser jacket to condense all the solvent.

5.4 Heat the flask by means of a suitable bath so that the distillate falls from the end of the reflux condenser in a steady stream. Continue the heating for 30 minutes, then remove the apparatus from the bath and cool to room temperature.

5.5 Disconnect the apparatus from the condenser and tilt tube if necessary so that suffcient solvent drains back into the flask to bring the water layer into the graduated tube. Drain the upper part of the tube completely so that all the water is collected in the graduated area.

5.6 Hold the tube in a vertical position and read (1) The top of the upper meniscus of the water layer (straight across) and (2) The top of the carbon tetrachloride layer, estimating to 0.01 ml on each reading.

Note. Should the water layer extend beyond the graduated portion of the tube, repeat the determination using a smaller sample.

5.7 Determine the difference in the readings and record the difference as the volume of water in the specimen.

5.8 Considering one milliliter of water as equal to one gram, calculate (by weight) the percentage of moisture in the specimen.

5.9 Calculation.

$$\text{Percent moisture} = 100 \frac{V}{W}$$

where:

V = corrected volume of water, ml.

W = Weight of sample, gm.

Downloaded from http://www.everyspec.com

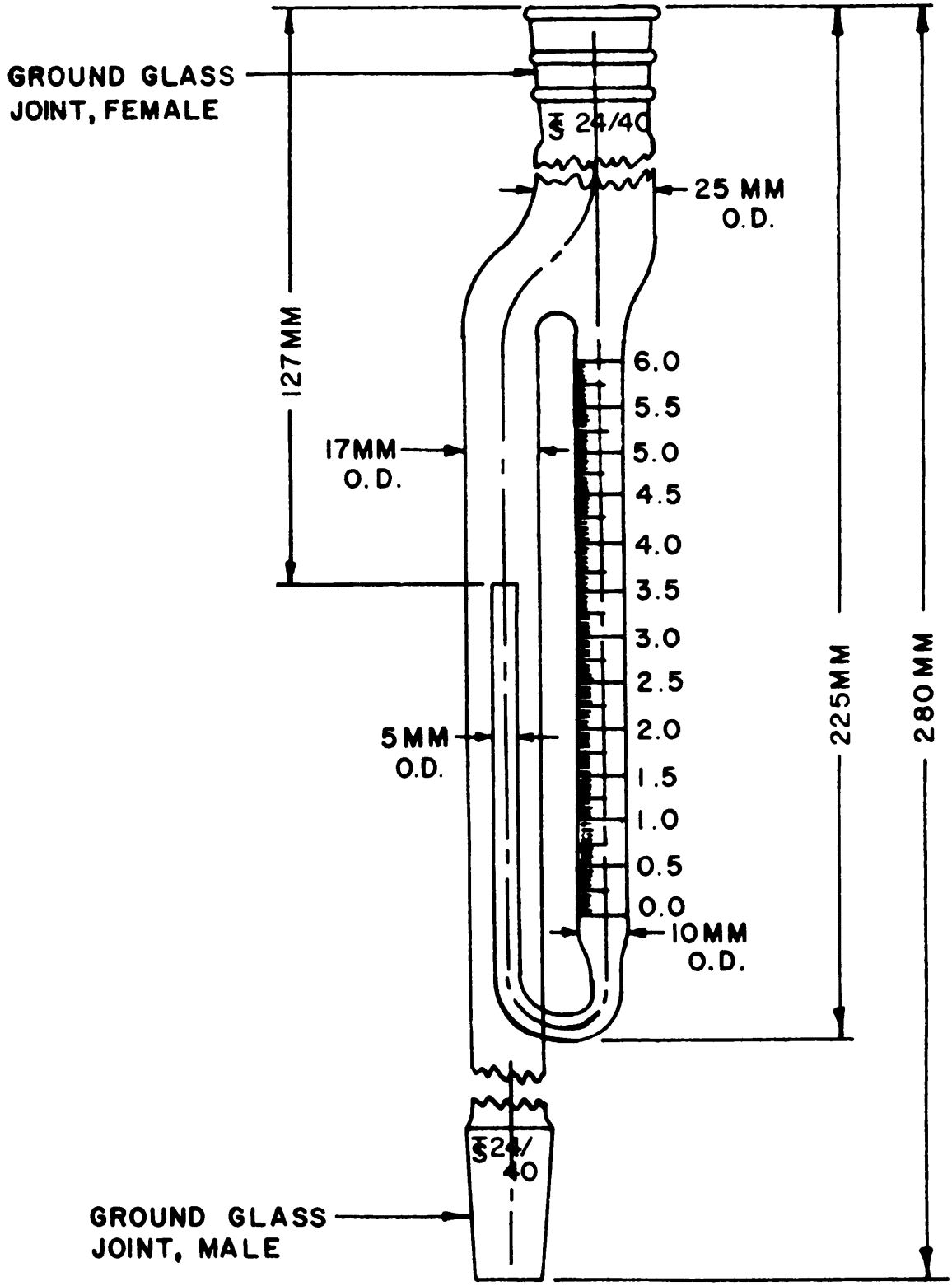

FIGURE 1. *Moisture tube.*

Downloaded from http://www.everyspec.com

METHOD 101.4
MOISTURE (KARL FISCHER METHOD)

1. SCOPE.

1.l This is a general method for determining moisture of explosives that do not react with the reagents used and which dissolve readily in the reagents or from which the moisture can be removed by extraction.

Note. Although the application of the Karl Fischer Reagent for determining the moisture content of explosives is general in scope, its chemical reactivity with materials other than moisture imposes certain limitations that must be taken into account by modifications of the method for the purpose of adaptation to specific application Detail specifications should be consulted for adaptations to materials that require modifications of the procedure listed herein.

2. SPECIMEN.

2.1 The specimen shall consist of approximately 8 to 10 gm. of explosive, weighed within 0.2 mg.

Note. The specimen should contain not more than 0.01 gm. of water. The specimen weight should be adjusted after a preliminary determination, so as not to exceed the 0.01 gm. maximum.

The sample should be placed in a glass stoppered weighing bottle. The weighing bottle and contents are weighed, before and after the introduction of the specimen into the beaker through the sample porthole of the rubber stopper (fig. 3) obtaining the specimen weight by the difference in the weighings taken.

Loss of 0.05 gm. of the specimen has no appreciable effect on the accuracy of the determination.

3. APPARATUS.

3.1 Titration assembly. The apparatus shown on figures 1, 2, and 3 shall be used. The rubber stopper shall be fitted with the electrodes, buret tips, and an air vent to a drying tube, and placed in the iron ring. The sample porthole shall be closed with a glass stopper and the iron ring shall be fastened to a ring stand. The ring with the stopper shall remain fixed throughout the determination. The titration vessel shall remain fitted onto the stopper, and the magnetic stirrer placed beneath the beaker, to serve as a support as well as a stirring mechanism.

3.2 Titration vessel. A 200 ml tall form beaker, without pouring lip, as shown on figure 2, has been found satisfactory. The dried beaker shall be taken from the drying oven and immediately connected to the stopper in the titration assembly. As the beaker cools, dry air will be drawn in through the drying tube at the vent. A minimum of four dry beakers will be required.

3.3 Buret assembly. Two all glass buret assemblies (one for Karl Fischer reagent and one for water-in-methanol solution), to permit introduction of the reagent into the titration vessel (200 ml beaker, Fig. 2) by gravity from a reservoir, without exposure to atmospheric moisture, shall be used. The Machlett automatic burets have been found satisfactory. The reservoirs connected to the burets with all glass tubing shall be protected against atmospheric moisture by drying tubes and protected from light with black paint or dark paper on the outside of the reservoir bottles.

3.4 Electrodes. Two platinum electrodes, 0.016 inch diameter, sealed-in-glass, with mercury connections, shall be used.

3.5 Timer. Any interval timer which can measure time to the nearest second and can record minutes, shall be used.

4. MATERIALS.

4.1 Karl Fischer reagent. To make 1000 ml

Downloaded from http://www.everyspec.com

of the reagent, 264 gm. of anhydrous pyridine of highest purity shall be placed in a 1000 ml Florence flask, and 61 gm. of liquid sulfur dioxide (SO_2) shall be added by inverting the cylinder and allowing the SO_2 to run through a glass tube into the pyridine in the flask on a balance pan. A 664 ml. portion of anhydrous methanol (not more than 0.02 percent moisture) shall be added. A calcium chloride drying tube shall be attached and the flask chilled in an ice bath. When thoroughly chilled 65 gm. of chemically pure (c.p.) resublimed iodine shall be added at one time. The solution shall be kept chilled and agitated by swirling until the iodine has dissolved completely. Due to its rapid initial deterioration, the reagent should not be used for 24 hours. One ml. is equivalent to approximately 0.0025 gm. water. Alternatively commercially available Karl Fischer reagent may be used.

4.2 Standard water-in-methanol solution. To a previously dried 1000-ml. volumetric flask, 2 ml. of water shall be pipetted, immediately diluted to the mark with anhydrous methanol, stoppered, and mixed thoroughly.

4.3 Special solvent. Equal volumes of anhydrous methanol and carbon tetrachloride shall be mixed. If necessary, the solvents may be dried by distillation.

Note. The special solvent or solvents employed for each adaptation will vary depending on the nature of the material being tested. Some of the solvents commonly employed are: Methanol, Ethanol, Dioxane, Diethyl Ether, Acetic Acid and Dimethyl-formamide.

4.4 Sodium tartrate dihydrate. The water content of this material shall be established by determining the loss in weight cm drying at 105°C. for 3 hours. The water content of this material shall be 15.66& 0.05 percent. If it is not, a fresh bottle of the material shall be used.

5. PROCEDURE.

5.1 Standardize the solution as follows:

5.1.1 Karl Fischer reagents

a. Transfer a 100 ml. portion of the special solvent to one of the dry 200 ml. beakers (see fig. 2) through the sample porthole of the rubber stopper.

b. Add a slight excess of Karl Fischer reagent and titrate with standard water-in-methanol solution to the preliminary end point exactly as specified in 5.3.

c. Immediately upon reaching the preliminary end point release the timer and take buret readings.

d. Add an accurately measured portion of approximately 10 ml. of the Karl Fischer reagent and titrate the solution immediately with standard water-in-methanol solution.

e. Control these operations so as to reach the second end point within 3.5 minutes plus or minus 15 seconds of the preliminary end point. 22

Note. This second end point may be used as the preliminary end point for a check standardization. In this case, the timer shall be returned to zero and released as soon as the second end point has been reached, and the titration for the third end point shall be completed within an additional 3.5 minutes.

f. Calculate the ml. of standard water-in-methanol solution per ml. of Karl Fischer reagent. This is the ratio R referred to in the calculation of F. Check determinations should agree within 0.010.

Note. Because the ratio is constantly changing due to deterioration of the reagent, the standardization shall be made at least once a day, more often for more accurate work.

5.1.2 Standard water-in-methanol solution

a. Transfer a 100 ml. portion of special solvent to another one of the dry 200 ml. beakers through the sample porthole of the rubber stopper.

b. Titrate with Karl Fischer reagent and standard water-in-methanol solution to the preliminary end point, exactly as specified in 5.2.

c. Release the timer and bake buret readings immediately.

Downloaded from http://www.everyspec.com

d. Quickly introduce from a glass stoppered weighing bottle, about 0.5 gm. of sodium tartrate dihydrate, weighed by difference to the nearest milligram.

e. Add a slight excess of Karl Fischer reagent and back titrate with water-in-methanol solution to the final exact end point within 3.5 minutes.

f. Repeat the titration at least once.

g. Calculate the standardization factor "F" as follows:

$$F = \frac{0.1566\ W}{V\ R - S}$$

where:

F = gm. of water per ml. of standard water-in-methanol solution.

23

W = gm. of sodium tartrate dihydrate.

V = ml. Karl Fischer reagent used for titration.

R = ml. standard water-in-methanol solution per ml. Karl Fischer reagent.

S = ml. standard water-in-methanol solution for back-titration.

5.2 Transfer a 100 ml portion of the special solvent through the sample porthole into the dry beaker of the titration assembly containing a plastic coated magnet, and stopper the beaker immediately. The platinum electrodes must be kept covered' with the special solvent throughout the determination.

5.3 Start the magnet stirrer and titrate the water in the solvent by adding a slight excess of the standardized Karl Fischer reagent to produce a reddish-brown color which persists for at least half a minute.

5.4 Adjust the variable resistance at this point so that with excess Karl Fischer reagent present, the needle of the micro-ammeter (see Fig. 3) will be at the upper end of the scale.

5.5 Titrate the solution slowly with the water-in-methanol solution until the exact preliminary end point is reached. This end point is defined as the point at which one drop of the standard water-in-methanol solution causes the micro-ammeter needle to waver and then slowly drift from the upper end of the scale toward the lower end in not less than 15 seconds.

5.6 When the preliminary end point is reached, release the stop watch. All succeeding operations must be completed within 3.5 minutes ± 15 seconds.

5.7 Introduce the specimen quickly into the beaker through the sample porthole of the rubber stopper.

5.8 Close the porthole immediately and stir the contents of the beaker for approximately 1.5 minutes by means of the magnetic stirrer.

5.9 Take buret readings, and add a slight excess of the standardized Karl Fischer reagent within 1.5 minutes making a total of three minutes up to this point.

5.10 Back titrate the solution carefully with standard water-in-methanol solution to reach the exact final end point in 3.5 minutes ± 15 seconds from the time the preliminary end point was reached. Obtain the final end point in the same manner as the preliminary end point (defined above) was obtained. The volume of the back-titration shall be less than 1 ml.

5.11 Remove the beaker and rinse the electrodes and stirring bar with acetone, and place another clean, dry 200 ml. beaker in position for the next determination.

5.12 Calculations.

$$\text{Percent water} = \frac{F\ (VR - S)\ 100}{W}$$

where:

F = gms. of water per ml. of standard

Downloaded from http://www.everyspec.com

water-in-methanol solution as determined above.

V = ml of Karl Fischer reagent added to the sample.

R = ml. of standard water-in-methanol solution per ml. of Karl Fischer reagent.

S = ml. of standard water-in-methanol solution for back-titration of sample.

W = gms. of sample.

Note. For determining the moisture in coated explosives and other explosives requiring a longer contact time with the special solvent, all operations succeeding the preliminary end point must be completed within 18.5 ± 0.25 minutes. The contents *of* the beaker is stirred for 15 minutes after the introduction of the specimen. A blank must be run to correct for the moisture absorbed during this longer stirring period. The percent water is then calculated as follows:

$$\text{Percent water} = \frac{F\,(VR-S)-(V'R-S')\,100}{W}$$

where:

F = gm. of water per ml. of standard water-in-methanol solution

V = ml. of Karl Fischer reagent added to sample

V' = ml. of Karl Fischer reageant added to blank

R = ml. of standard water-in-methanol solution per ml. of Karl Fischer reagent

S = ml. of standard water-in-methanol solution for both titration of sample

S' = ml of standard water-in-methanol solution for both titration of blank

W = weight of sample

24

Downloaded from http://www.everyspec.com

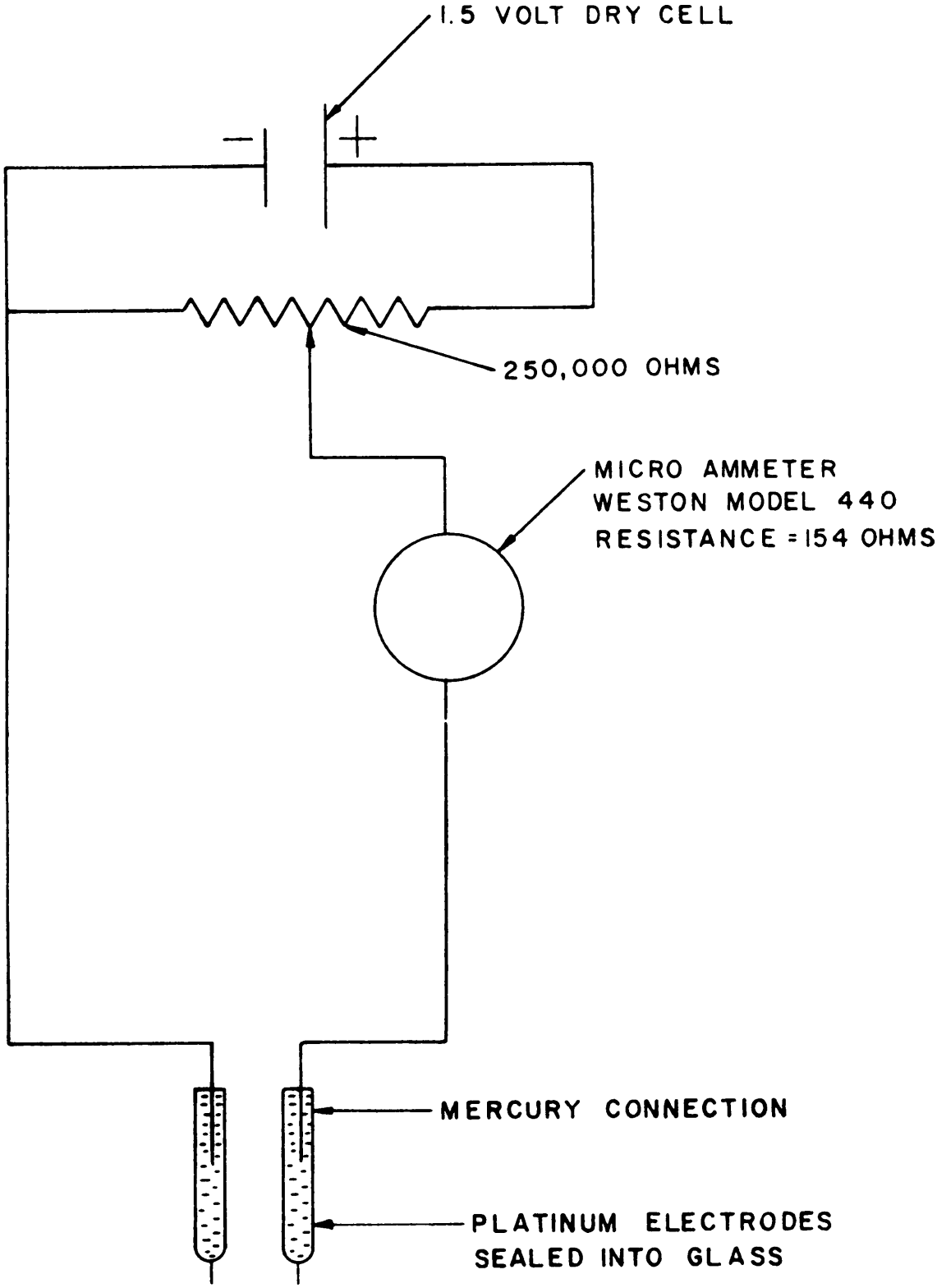

25

FIGURE 1. *Wiring diagram.*

Downloaded from http://www.everyspec.com

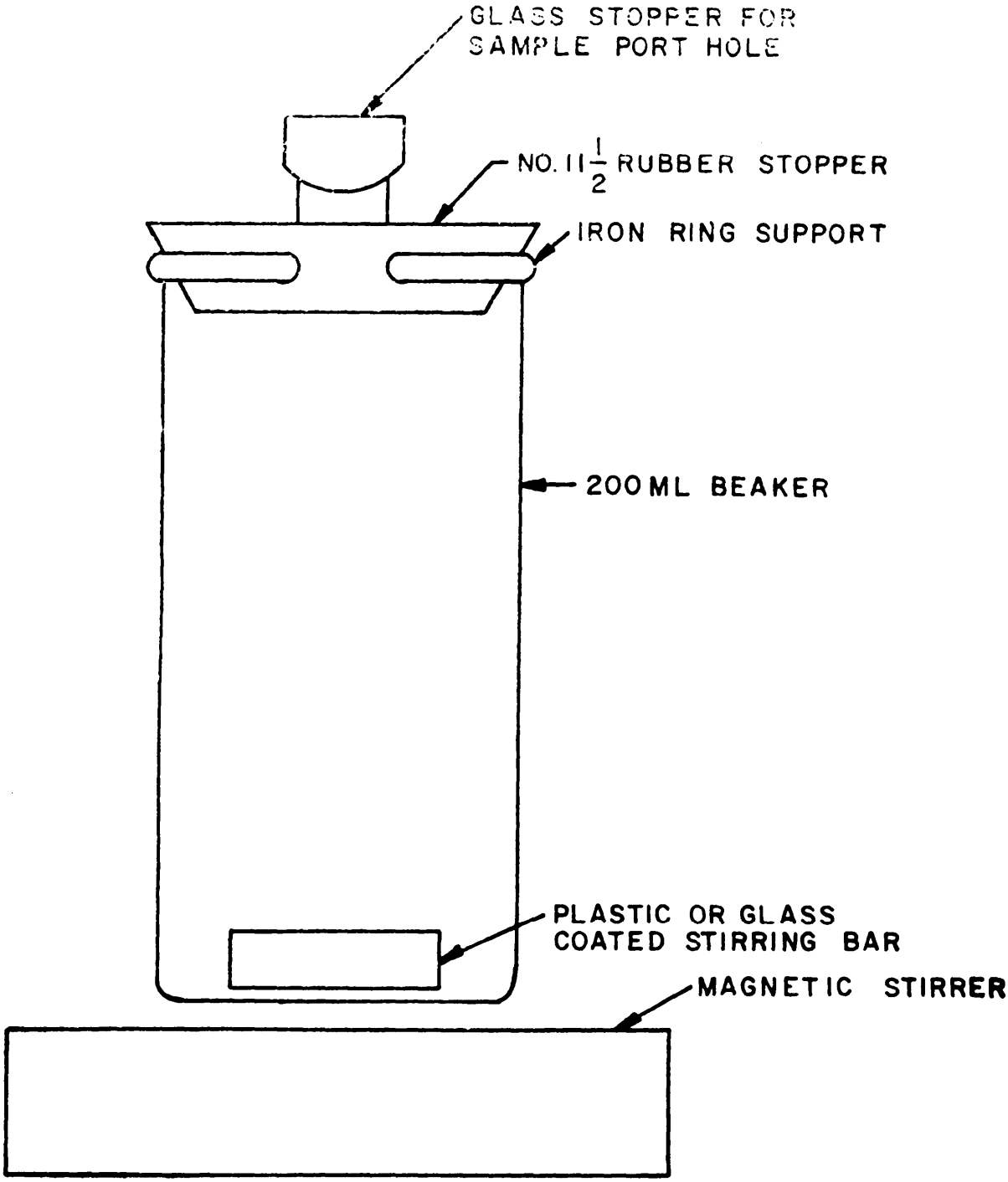

FIGURE 2. *Titration assembly.*

Downloaded from http://www.everyspec.com

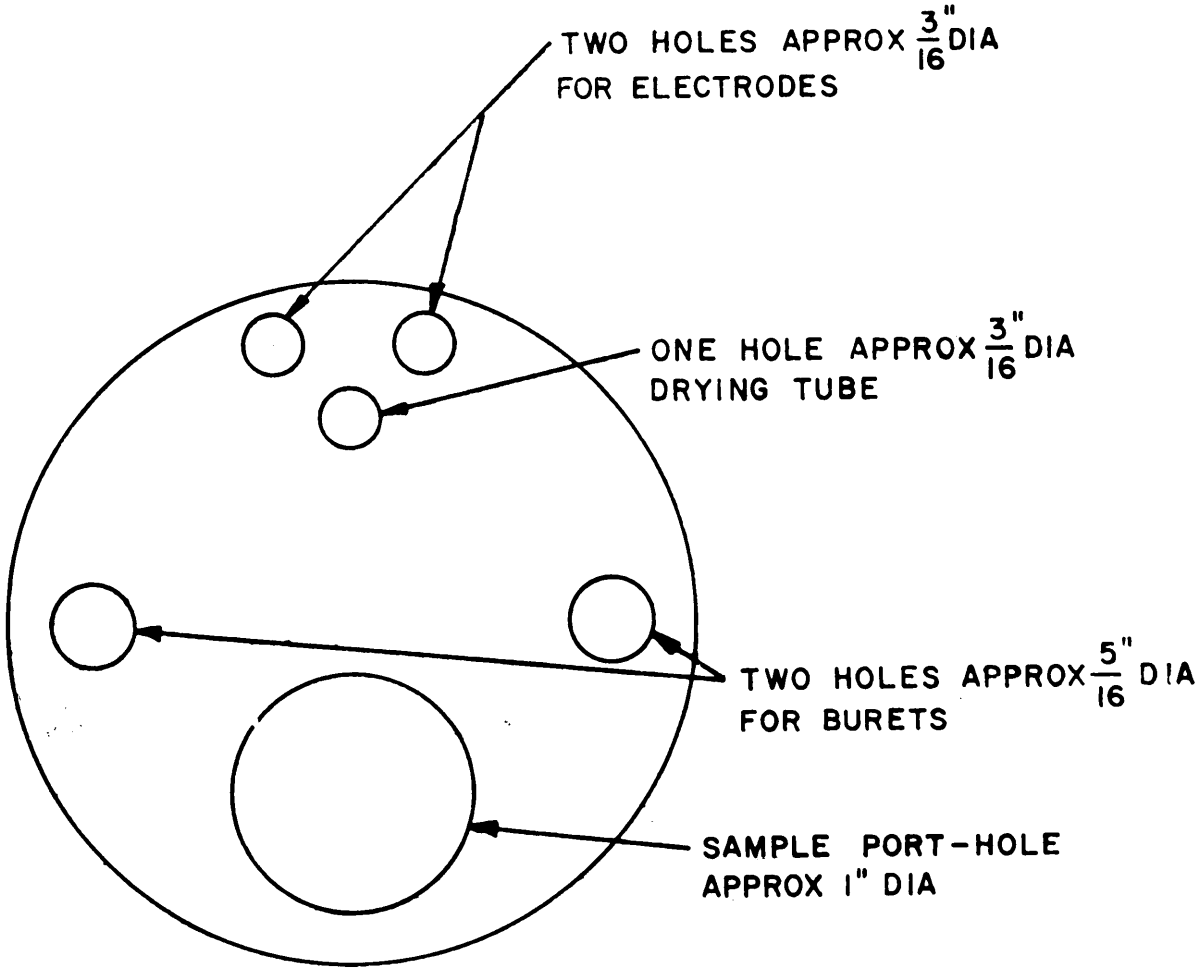

27/28

FIGURE 3. *Rubber stopper — top view.*

Downloaded from http://www.everyspec.com

Downloaded from http://www.everyspec.com

METHOD 101.5
MOISTURE AND VOLATILES (OVEN METHOD)

1. SCOPE.

1.l This method is used for determing the moisture and volatiles of explosives on the basis of loss of weight on heating at 100° ± 5°C.

2. SPECIMEN.

2.1 The specimen shall consist of approximately 5 gm of the explosive, weighed to within 0.2 mg.

3. APPARATUS.

29/30

3.1 Weighing dish (aluminum or glass) diameter, 60mm. depth, 30mm.

Warning: Samples that exhibit hygroscopity require a glass receptacle with a tight fitting stopper. In the event a receptacle with a ground glass stopper is used, it should be the slip-on (cap-style) type of stopper.

3.2 Oven.

3.3 Desiccator containing an indicating desiccant.

4. PROCEDURE.

4.1 Plus the specimen in a tared stoppered weighing dish.

4.2 Heat the dish and contents with the stopper removed for 4 hours in an oven at 100° ± 5°C. and atmospheric pressure.

4.3 Cover the dish and cool the specimen to room temperature in the desiccator.

4.4 Determine the loss in weight and calculate (by weight) the percentage of moisture and volatiles in the sample.

4.5 Calculations

$$\text{Percent moisture and volatiles} = \frac{A\ 100}{B}$$

where:

A = loss in weight, gm.
B = weight of sample, gm.

Downloaded from http://www.everyspec.com

Downloaded from http://www.everyspec.com

METHOD 101.6
MOISTURE AND VOLATILES (VACUUM OVEN METHOD)

1. SCOPE.

1.1 This method is used for determining the moisture and volatiles, on the basis of loss of weight on heating at 55° ± 2°C. under vacuum, on multi-component explosives that contain material that would be damaged by 100°C. heat treatment at atmospheric pressure.

2. SPECIMEN.

2.1 The specimen shall consist of approximately 5 gm. of the explosive weighed to within 0.2 mg.

3. APPARATUS.

3.1 Weighing dish (aluminum or glass) : diameter, 60 mm; depth 30 mm.

3.2 Vacuum Oven.

3.3 Desiccator containing an indicating desiccant.

4. PROCEDURE.

4.1 Follow the procedure described in Method 101.5 for the determination of the percentage moisture and volatile in the explosive. However, in this determination heat for 6 hours in a vacuum oven at a temperature of 55° ± 2°C. and a pressure (absolute) of 80mm. ± 10mm. of mercury instead of four (4) hours in an oven at 100° ± 5°C. and atmospheric pressure.

Downloaded from http://www.everyspec.com

Downloaded from http://www.everyspec.com

METHOD 102.1
ACIDITY OR ALKALINITY
(HOT AQUEOUS EXTRACTION METHOD)

1. SCOPE.

1.1 This method is used to determine acidity or alkalinity of explosives that can be melted, partially or completely, at or below the temperature of boiling water (such as TNT, Pentolite).

2. SPECIMEN.

2.1 The specimen shall consist of approximately 5 to 10 gm. of the explosive, preferably as received, weighed to within 10 mg.

33

3. APPARATUS.

3.1 Steam bath.

3.2 Beaker, minimum 250 ml.

3.3 Buret, 25 ml.

4. MATERIALS.

4.1 Suitable indicator.

Note. The accuracy of acidimetric and alkalimetric titrations depends considerably on the choice of indicators. The color change of the indicator should occur as near as possible to the equilibrium point reached in neutralization. The color change of the indicator should be clearly distinguishable from any color that may be contained in the water extracts. It is also generally the case that indicators whose color change occurs with a hydrogen ion concentration greater than pH 7 are sensitive to weak bases, while those whose color change occurs with hydrogen ion concentration less than pH 7 are sensitive to weak acids. There are other factors involved for each particular determination. Therefore, the desirable indicator to be used in any acidity or alkalinity determination will depend on the equilibrium point of the titration, the color (if any) of the water extracts, the acid or base believed contained in the explosive. Other factors are also involved which will necessitate referring to the applicable method of explosive specification to determine the applicable indicator and standard solution to be used.

4.2 Standard solution

a. Sodium Hydroxide 0.1 normal, standard solution as specified in Method No. 602.1.

b. Hydrochloric Acid, 0.1 normal standard solution as specified in Method No. 601.1.

5. PROCEDURE.

5.1 Melt the specimen in a beaker on a steam bath.

5.2 Shake with 100 ml. of boiling neutral water.

Note. Neutral water is defied as distilled water which has been previously made neutral to the indicator to be employed for the test.

5.3 Cool, decant and retain the water extract.

Note. The solution may be decanted through No. 40 Whatrnan filter paper or equivalent to prevent any material from clouding the water extract.

5.4 Remelt the specimen and repeat the extraction with 50 ml. of neutral boiling water.

5.5 Combine the two water extracts in a clean beaker and allow to cool to room temperature.

5.6 Add one to two drops of indicator to the solution and note the color of the solution after the addition of the indicator.

Note. If just the presence of acidity or alkalinity

Downloaded from http://www.everyspec.com

is desired, it can be detected by the color of the solution after the addition of the indicator and reported accordingly. (Example creosol red turns acid solutions yellow and alkali solutions red. Therefore, after the addition of creosol red a yellow colored solution would indicate acidity; a red color alkalinity).

5.7 Titrate with 0.lN sodium hydroxide, if the solution is acid. Titrate with O.1N hydrochloric acid, if the solution is alkaline.

5.8 Calculate the percent acidity or alkalinity from the volume of standard solution used.

5.9 calculations.

$$\text{Percent acidity or alkalinity} = \frac{VNF}{W}$$

where:

V = volume of standard solution used, ml.

N = normality of standard solution.

w = weight of sample, gm.

F = acidity or alkalinity factor.

Note. The common acids and alkalies determined in explosives and for factors ernployed are as follows:

Acid or Alkalies	*Factor (F)*
Nitric Acid	6.3
Sulfuric Acid	4.9
Hydrochloric Acid	3.6
Picric Acid	23.0
Acetic Acid	6.0
Sodium Hydroxide	4.0
Sodium Carbonate	5.8
Ammonia	1.7

34

Downloaded from http://www.everyspec.com

METHOD 102.2
ACIDITY OR ALKALINITY
(COLD AQUEOUS EXTRACTION METHOD)

1. SCOPE.

1.1 This method is used to determine acidity or alkalinity of finely powered single component explosives whose acidity or alkalinity is easily extractable by water (such as lead azide, mercury fulminate).

2. SPECIMEN.

2.1 The specimen shall consist of approximately 5 gm. of the explosive weighed to within 10 mg.

35/36

3. APPARATUS.

3.1 Steam bath.

3.2 Beaker, minimum 250 ml.

3.3 Buret, 25 ml.

3.4 Filtering crucible, medium porosity, sintered glass.

4. MATERIALS.

4.1 The materials used in this method are identical with those used in Method No. 102.1.

5. PROCEDURE.

5.1 Transfer the specimen to a filtering crucible.

5.2 Wash with five 20 ml. portions of cold distilled neutral water (0 to 15 degrees centigrade) which has been boiled prior to the test.

Note. The specimen may be placed in an Erlenmeyer flask instead of a filtering crucible and shaken with five 20 ml. portion of cold distilled neutral water. The portions of water should then be decanted through the filtering crucible after being in contact with the specimen for 3 minutes.

5.3 Allow each portion to remain in contact with the specimen for 3 minutes before applying suction to the crucible.

5.4 Collect the washings in a beaker and follow the procedure in Method No. 102.1 starting with Paragraph 5.6 to determine acidity or alkalinity.

Downloaded from http://www.everyspec.com

Downloaded from http://www.everyspec.com

METHOD 102.3
ACIDITY OR ALKALINITY
(COMPLETE SOLUTION METHOD)

1. SCOPE.

1.1 This method is used to determine acidity or alkalinity of explosives that readily dissolve in a solvent or combination of solvents.

Note. This method is applicable to a variety of acidity or alkalinity determinations, and is not intended to restrict or limit such factors as the solvent or solvents used, the indicator, or the acid or base being determined. For specific instructions refer to the applicable explosive specification..

2. SPECIMEN.

37

2.1 The specimen shall consist of approximately 5 to 10 gm. of the explosive weighed to within 10 mg.

3. APPARATUS.

3.1 Steam bath.

3.2 Beaker, 1000 ml.

3.3 Buret, 25 ml.

4. MATERIALS.

4.1 Suitable solvent or solvents such as acetone, carbon tetrachloride, benzene toluene as specified in the applicable method or explosive specification.

4.2 Indicator see *Note* in Method No. 102.1 following Paragraph 4.1.

4.3 Standard solution.

a. Sodium Hydroxide 0.1N standard solution as specified in Method No. 602.1.

b. Hydrochloric acid, 0.lN standard solution as specified in Method No. 601.1.

5. PROCEDURE.

5.1 Transfer the specimen to a beaker.

5.2 Add a sufficient amount of solvent to dissolve the sample.

5.3 Heat the beaker and contents on a steam bath until the material is dissolved.

Note. In cases where more than one component is present in a composition and the component are not mutually soluble in l common solvent, more than one solvent must be employed.

5.4 Add a volume of distilled water to the mixture, equal to the volume of solution(s) in the beaker. Stir and add an additional 250-300 ml. of water.

5.5 Allow the mixture to cool to room temperature.

5.6 Add twelve drops of indicator to the water layer in the breaker.

5.7 Note the color of the solution after the addition of the indicator. If the solution is acid, titrate with standard 0.lN sodium hydroxide; if it is alkaline, titrate with standard 0.lN hydrochloric acid.

5.8 Run a blank determination following the same procedure without the sample to correct for the acidity or alkalinity of the solvents.

5.9 Calculate the percent acidity or alkalinity from the volume of standard solution used.

5.10 Calculations.

$$\text{Percent acidity or alkalinity} = \frac{(V-v)\ NF}{W}$$

Downloaded from http://www.everyspec.com

where:

V = ml. of standard solution used in titrating sample.

v = ml. of standard solution used in titrating blank.

N = normality of standard solution.

W = weight of specimen.

F = factor for acid or base Method No. 102.1, Paragraph 5.9.

3.4

Downloaded from http://www.everyspec.com

METHOD 103.1
pH VALUE (ELECTROMETRIC METHOD)

1. SCOPE.

1.1 This method is used to determine the pH value of water extractions, suspensions or solutions of explosives.

2. SPECIMEN.

2.1 The specimen shall consist of approximately 1 to 5 gm. of the explosive weighed to within 0.2 mg.

3. APPARATUS.

39/40

3.1 Beaker, 150 ml. or bottle, 8 oz.

3.2 pH meter which reads directly in pH units and is capable of measuring accurately within 0.1 pH units.

4. MATERIALS.

4.1 Distilled water. The water should be freshly boiled, cooled and have a pH of 6.0 ± 0.5.

5. PROCEDURE.

5.1 Transfer the specimen to a 150 ml. beaker or an 8 oz. bottle.

5.2 Add 100 ml. of distilled water.

Note. pH values can also be determined on other solvent extracts of explosives.

5.3 Allow the mixture to stand with occasional stirring for 15 minutes.

5.4 Determine the pH of the mixture at 25° ± 2°C. with a pH meter.

Note. The percent acidity *or* alkalinity of the specimen may be determined at this point. It necessitates running a blank determination along with the specimen determination. If the pH value of the specimen solution is lower than the blank, the solution is titrated with standard sodium hydroxides O. IN, to the same pH value as the blank and calculated to percent acidity. If the pH value of the specimen solution is higher than the blank, the solution is titrated with standard hydrochloric acid, 0.lN, to the same pH as the blank and calculated to percent alkalinity.

The acidity or alkalinity is calculated from the amount of standard acid or base used according to the calculations in paragraph 6.10, Method No. 102.3.

Downloaded from http://www.everyspec.com

Downloaded from http://www.everyspec.com

METHOD 104.1.
VOLUBILITY (LEACHING METHOD)

1. SCOPE.

1.1 This method is used for determining solubility of an explosive in a solvent. The volubility of the explosive in the solvent should be of the nature of 0.5 to 2.0 percent. The soluble material may be an impurity in the explosive in which case it would be determined as percent soluble impurities.

Note. This method is applicable to a variety of volubility renditions, and is not intended to restrict or limit such factors as the solvent, temperature, or time of solvent-solute contact. For specific instructions, refer to the applicable method or explosive specification.

4/42

2. SPECIMEN.

2.1 The specimen shall consist of approximately 5 gm. of the explosive, preferable as received. In the event the sample is recieved wet, it should be mixed thoroughly, filtered and air dried on a Buchner funnel prior to removing the 5 gm. portion.

3. APPARATUS.

3.1 Filtering crucible, medium porosity, sintered glass.

3.2 Suction filtering apparatus.

3.3 Oven.

3.4 Desiccator containing an indicating desiccant.

4. MATERIAL.

4.1 Solvent as specified in the applicable method or explosive specification.

5. PROCEDURE.

5.1 Transfer the specimen to a tared filtering crucible.

5.2 Dry the crucible and contents in an oven to constant weight.

5.3 Cool the crucible and contents in a desiccator and weigh.

Downloaded from http://www.everyspec.com

Downloaded from http://www.everyspec.com

METHOD 105.1
INSOLUBLE MATERIAL (SOLVENT INSOLUBLE METHOD)

1. SCOPE.

1.1 This method is used to determine the solvent insoluble material that is present as an impurity in single or binary component explosives.

Note. This method is applicable to a variety of explosives both single and binary component. It is not intended to restrict or limit the kind or number of solvents used. For specific instructions refer to the applicable method or explosive specification.

2. SPECIMEN.

43/44

2.1 The specimen shall consist of approximately 10 gm. of the explosive, weighed to within 0.2 mg. Reference should also be made to the applicable method or explosive specification.

3. APPARATUS.

3. I Beaker.

3.2 Filtering crucible, Gooch type or equivalent.

4. MATERIALS.

4.1 Suitable solvent as specified in the applicable method or explosive specification.

5. PROCEDURE.

5.1 Transfer the specimen to a beaker.

5.2 Add sufficient solvent to dissolve all soluble material. Stir to facilitate solution. Heat on steam bath if necessary.

5.3 Filter the solution through a tared filtering crucible.

5.4 Transfer all insoluble material to the crucible.

5.5 Wash the crucible and contents with several 10 ml. portions of the solvent until all soluble material is removed from the crucible.

Note. For binary component materials, another solvent is usually required in order to dissolve the specimen. Therefore, the washings are repeated until all soluble components of the explosive have been removed. For materials requiring long extraction periods, it is necessary to carry out the extractions in a suitable extractor.

5.6 Dry the crucible in an oven, cool in a desiccator and weigh.

5.7 Calculate the increase in weight of the crucible to percent insoluble material.

5.8 Calculations.

$$\text{Percent insoluble material} = \frac{(B-A)\ 100}{w}$$

where:

A = weight of tared crucible, gm.

B = weight of tared crucible and residue, gm.

W = weight of sample, gm.

Note. To determine the percent inorganic insoluble material the crucible and residue from the solvent insoluble test is ignited, cooled in a desiccator and weighed. The increase in weight of the crucible over its original tare weight is calculated to percent inorganic insoluble material. The original crucible should be prepared, washed with the suitable solvent, ignited and tared prior to start of the determination.

Downloaded from http://www.everyspec.com

Downloaded from http://www.everyspec.com

METHOD 106.1
GRIT OR INSOLUBLE PARTICLES
(SOLVENT EXTRACTION METHOD)

1. SCOPE.

1.1 This method is used for determining the number of particles of grit contained in explosives that can easily be dissolved in one or two solvents.

2. SPECIMEN.

2.1 The specimen shall consist of approximately 50 gm. of the explosive weighed to within 10 mg.

45

3. APPARATUS.

3.1 Beaker, 400-ml.

3.2 Steam bath.

3.3 U.S. Standard Sieve No. 60 (Federal Specification RR-S-366).

3.4 U.S. Standard Sieve No. 40 (Federal Specification RR-S-366).

3.5 Glass slide.

3.6 Steel spatula.

4. MATERIAL

4.1 Suitable solvent.

Note. In case of one component compositions, only one solvent is employed; in the case of binary compositions and multi-component compositions, more than one solvent may be required.

5. PROCEDURE.

5.1 Place the specimen in a 400-ml. beaker.

Note. In the case of single component explosives, it is at times more desirable to place the specimen directly in a soxhlet apparatus or other suitable extractor and extracted with a suitable solvent until all soluble material is dissolved.

5.2 Add 100 ml. of a suitable solvent to the beaker.

5.3 Heat the beaker and contents on a steam bath until all lumps are broken down and all soluble material is dissolved.

5.4 Pour the mixture through a small U.S. , Standard sieve No. 60.

5.5 Wash all the insoluble matter from the beaker onto the sieve with a stream of the solvent.

5.6 Wash the residue on the sieve with additional solvent to remove the remaining undissolved component of the explosive being tested.

Note. The above step may be repeated with still other solvents *to* remove all remaining components.

5.7 Dry the sieve.

5.8 Count and examine any particles remaining on the U.S. Standard No. 60 sieve.

5.9 Brush any particles retained on the No. 60 sieve onto a U.S. Standard No. 40 sieve.

5.10 Count and examine any particles retained on the No. 40 sieve.

5.11 Note if the particles are grit as indicated by their lack of uniformity and the persistence of a scratching noise when pressing and rubbing the material on a smooth glass slide with a smooth steel spatula.

Downloaded from http://www.everyspec.com

5.12 Report the number of grit particles retained on the U.S. Standard No. 60 sieve and the number of grit particles retained on the No. 40 sieve.

46

Downloaded from http://www.everyspec.com

METHOD 107.1
ASH

1. SCOPE.

1.1 This method is used for determining the ash content of explosives.

2. SPECIMEN.

2.1 The specimen shall consist of approximately 5 to 10 gm. of the explosive weighed to within 0.2 mg.

3. APPARATUS.

3.1 Crucible, porcelain, approximately 30 ml. capacity.

3.2 Muffle furnace.

3.3 Desiccator containing an indicating desiccant.

3.4 Bunsen burner.

3.5 Shatterproof barricade.

4. MATERIALS.

4.1 Paraffin wax.

5. PROCEDURE.

5.1 Transfer the specimen to a tared porcelain crucible which has previously been ignited to 900°C.

5.2 Add approximately 15 ml. of melted paraffin wax and allow to stand for a few minutes so that the wax fully impregnates the sample.

5.3 Place the crucible on a stand behind a shatterproof barricade and warm gently from below with a Bunsen burner without permitting the flame to play into the crucible.

5.4 When the mixture ignites allow it to bum slowly.

5.5 Reheat the crucible until all the paraffin has burned away.

5.6 Place in a muffle furnace for 30 minutes at 900°C., cool in a desiccator and weigh.

5.7 Make a blank determination on the paraffin wax and apply the necessary correction.

5.8 From the corrected weight of residue calculate the percentage of ash in the sample.

5.9 Calculation:

$$\text{Percent ash} = \frac{(A-B)\ 100}{W}$$

where:

A = weight of residue from sample, gm.

B = weight of residue from paraffin wax gm.

w = weight of specimen, gm.

Downloaded from http://www.everyspec.com

Downloaded from http://www.everyspec.com

METHOD 108.1
SOLVENT EXTRACTION (SELECTIVE SOLVENT METHOD)

1. SCOPE.

1.1 This method is used for the quantitative determination of components in explosive compositions by the selective extraction] technique.

1.2 This method is used for extracting soluble ingredients from explosive compositions for use in subsequent determinations.

1.3 This method is used for extracting soluble explosive components which would interfere with subsequent determinations.

49

Note. This method is applicable to a variety of extraction conditions, and is not intended to restrict or limit such factors as the solvent or apparatus used, or the time of extraction. For specific instructions refer to the applicable explosive specification.

2. SPECIMEN.

2.1 The specimen shall consist of an accurately weighed portion of the explosive as specified in the applicable method or specification.

3. APPARATUS.

3.1 Vacuum suction apparatus.

3.2 Filtering crucible of suitable porosity according to the particle size of the material being tested.

3.3 Beaker.

3.4 Stirring rod.

3.5 Oven.

3.6 Steam bath.

3.7 Desiccator with indicating desiccant.

4. MATERIALS.

4.1 Extracting solvent, such as acetone, carbon tetrachloride, toluene, or benzene as specified in the applicable method or explosive specification.

5. PROCEDURE.

5.1 Transfer a specimen to a beaker or directly to a tared filtering crucible.

a. When a beaker is employed, add a sufficient amount of the appropriate solvent and allow a sufficient contact period for the soluble ingredient of the composition to dissolve (to facilitate solution heat the beaker on a steam bath and stir with a glass rod). Filter the mixture through a tared filtering crucible with the aid of a stream of the suitable solvent and a stirring rod.

b. If the specimen is weighed directly in a crucible, add a sufficient quantity of solvent, (solvent may be added hot to facilitate solution) in small portions, to the crucible and allow the solvent to drain through before applying suction.

5.2 Wash the residue in the crucible with portions of the suitable solvent until extraction is complete (which may be indicated by any suitable test).

5.3 When extraction is complete proceed according to one or more of the applicable steps that follow:

a. Evaporate the solvent using a stream of dry air, and retain the dry residue for further determinations.

b. Aspirate the crucible and residue to remove all volatile solvents. Retain the residue for further determinations.

Downloaded from http://www.everyspec.com

c. Dry the crucible and residue by aspirating to remove all volatile solvents, then dry in an oven at an appropriate temperature, cool in a desiccator and weigh. Calculate the loss in weight as percent constituent extracted by one of the suitable solvents as follows :

$$\text{Percent constituent} = \frac{(A-B)100}{W}$$

where:

A = weight of crucible and residue, gm.

B = weight of crucible, gm.

W = weight of sample, gm.

57

Downloaded from http://www.everyspec.com

METHOD 201.1
BULK OR APPARENT DENSITY
(STANDARD VESSEL METHOD)

1. SCOPE.

1.1 This method is used to determine the bulk or apparent density (weight per unit of outside volume, which may include voids) of explosive of low sensitivity.

2. SPECIMEN.

2.1 The specimen shall consist of approximately 85 ml. (Note: ml., not gm.) of the explosive which has been mixed thoroughly to obtain representative distribution of large and small grains.

51

3. APPARATUS.

3.1 Funnel made of sheet metal 1/32 inches thick, conical portion 4-1/8 inches inside diameter at top and 2-3/4 inches over-all height, stem of funnel 2 inches long and 9/16-thick inside diameter. Approximately midway along the length of the stem, a sheath is inserted to support a metal slide, 2 by 1-1/8 inches, which controls the flow of sample from the funnel. The sheath also serves to support the funnel on the ring. (See fig. 1.)

3.2 Standard cup having a flat top and an inside surface concave at the bottom to prevent bridging of the sample over sharp corners. The cup shall have a volume of approximately 60 ml. an inside diameter of approximately 4.2 cm. or 1.65 inches. an in side height of approximately 4.4 cm. or 1.73 inches, and a maximum weight of approximately 41 gm. (See fig. 1.)

3.3 Plastic or l vood spatula.

4. PROCEDURE

4.1 Standardize the cup as follows:

a. Fill the standard cup with water a[+] room temperature to form a convex meniscus over the top.

b. Press a glass plate down on top of the cup to remove excess water so that no air bubbles are visible under the glass plate.

c. Wipe the outside of cup and plate and weigh the entire assembly.

d. Empty the cup, dry and weigh with glass plate. Calculate the weight of water as follows:

$$A - B = W$$

where:

A = weight of standard vessel, cover and water , gm.

B = weight of stanadard vessel and cover, gm.

W = weight of water, gm.

4.2 Adjust the ring support to make the distance from the top of the standard cup to the bottom of the funnel stem exactly 2-1/2 inches. Place the center of the standard cup directly under the funnel stem.

4.3 Transfer the specimen to the funnel with the flow orifice closed.

4.4 Open the orifice to permit free flow of explosive material into the standard cup until it is heaping full.

Caution: Do not tap or jar the cup as this will cause the powder to settle and give high results.

4.5 With a spatula carefully strike off the excess explosive, level with the top of the

Downloaded from http://www.everyspec.com

cup, avoiding any compression of the powder into the standard cup.

4.6 Tap the level full cup to settle the explosive material and prevent spillage during weighing, but do not add more powder.

4.7 Weigh to the nearest centigram.

4.8 Calculate the bulk density as follows:

$$\text{Bulk density, gm. per ml.} = \frac{A - B}{W}$$

where:

A = weight of sample plus standard cup, gm.

B = weight of standard cup, gm.

W = weight of water obtained in standardization of standard cup, gm.

Downloaded from http://www.everyspec.com

53/54

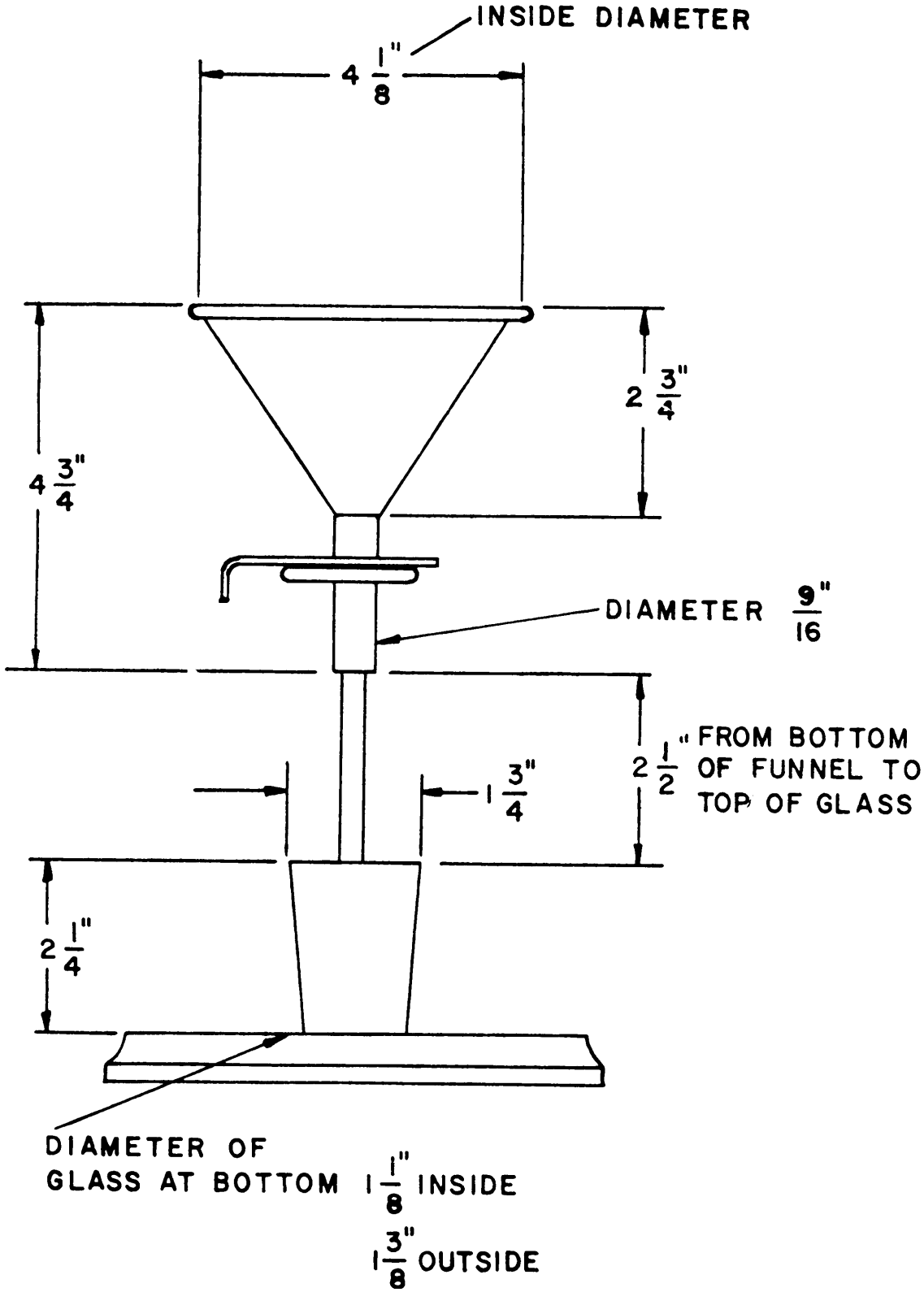

FIGURE 1. *Apparatus for dterminaion of bulk density.*

Downloaded from http://www.everyspec.com

Downloaded from http://www.everyspec.com

METHOD 201.2
BULK OR APPARENT DENSITY (WET METHOD)

1. SCOPE.

1.1 This method is used to determine the bulk or apparent density (weight per unit of apparent volume) of explosives of high sensitivity.

2. SPECIMEN.

2.1 The specimen shall consist of approximately 2 to 3 gm. of the dried explosive weighed to within 10 mg.

55/56

3. APPARATUS.

3.1 Cylinder. Calibrated 5 ml. graduated cylinder having an inside diameter of about 9 mm. and graduated in 0.1 ml. divisions.

4. MATERIALS.

4.1 Suitable solvent for the liquid medium.

Note. In selecting the liquid medium to be used for a particular substance, three factors must be considered. The material being tested must not be soluble in the liquid, the density of the material must be greater than the liquid and the mixture must not be hazardous.

5. PROCEDURE.

5.1 Add 2 ml. of the suitable solvent to the graduated cylinder.

5.2 Add the specimen to the cylinder in small amounts. Wash down any of the specimen which adheres to the walls of the cylinder with the suitable solvent.

5.3 Fill the cylinder beyond the 5 ml. mark with this solvent.

5.4 Allow the cylinder to stand for one hour and note the volume occupied by the specimen.

Note. If the volume of the specimen exceeds 5 ml., repeat the test using a smaller sample weight.

5.5 Calculate the bulk or apparent density as follows:

$$\text{Bulk density, gm. per ml.} = \frac{W}{V}$$

where:

W = weight of the specimen, gm.
V = volume occupied by the specimen, ml.

Downloaded from http://www.everyspec.com

Downloaded from http://www.everyspec.com

METHOD 201.3
BULK AND APPARENT DENSITY (METHOD)

1. SCOPE.

1.1 This method is used to determine the bulk or apparent density (weight per unit of packed volume, the specimen is dropped and tapped to dispell voids) of granular explosion of low sensitivity.

2. SPECIMEN.

2.1 The specimen shall consist of approximately 50 gm. of the explosive used as received.

57/51

3. APPARATUS.

3.1 Cylinder. 100 ml. graduated glass stoppered precision grade cylinder, meeting the requirements for accuracy as specified in National Bureau of Standards, Circular C-434 (tolerance in 100 ml. of ± 0.20 ml.) and marked within 1 ml. sub-division the length between the 10 ml. and 100 ml, marks must be 145 ± 15 mm.

3.2 Cork.

4. PROCEDURE.

4.1 Pour the specimen into a 100 ml. graduated glass measuring cylinder, replacing the glass stopper with a cork.

4.2 Drop the cylinder vertically from a height of 2-1/2 inches into a piece of hard leather 50 times.

4.3 Level the surface of the specimen in the cylinder by gentIy tapping and read the volume in ml.

4.4 Calculate the bulk or apparent density as follows:

$$\text{Bulk density, gm. per ml.} = \frac{W}{V}$$

where:

W = weight of specimen, gm.

V = volume occupied by the specimen, ml.

Downloaded from http://www.everyspec.com

Downloaded from http://www.everyspec.com

METHOD 202.1
DENSITY (IN VACUO)

1. SCOPE.

1.1 This method is used to determine the density in vacuo of explosive compositions in water insoluble pellet form.

2. SPECIMEN.

2.1 The specimen shall consist of an accurately weighed explosive pellet weighed to within 0.2 mg. containing no sharp edges or loose powder.

3. APPARATUS.

59

3.1 Analytical balance, without dampers.

3.2 Wire with loop on end to carry sample.

3.3 Counter tare weight for wire sample holder.

3.4 Beakers 250 ‘ml., 2 required.

3.5 Thermometer.

3.6 Beaker support.

3.7 Constant temperature room maintained at 70°F.

3*8 Glass standard. Pyrex glass having approximately the same volume as the pellets to be analyzed.

4. MATERIAL.

4.1 Water saturated with material under test and containing 0.01 percent aerosol.

5. PROCEDURE.

5.1 Determine the density (in vacuo) of the glass standard as follows:

5.1.1 Condition the material and equipment and conduct the test in a constant temperature room maintained at 70°F.

5.1.2 Weigh and record the weight of the pyrex standard.

5.1.3 Place the weighed sample in a 250 ml. beaker containing a 0.01 percent solution of aerosol in water saturated with the sample material. After the standard has become thoroughly wet, dislodge any adhering bubbles.

5.1.4 Place another 250 ml. beaker on the beaker support over the left balance pan of an analytical balance.

5.1.5 Suspend a wire loop from the hanger of the left balance pan into the beaker.

5.1.6 Add water, saturated with the material under test and containing 0.01 percent aerosol, to the beaker until the loop of the wire is completely immersed.

5.1.7 Attach a tare weight to the right hand hook of the balance and adjust balance to zero.

5.1.8 Place the standard in the loop and completely immerse it in the saturated solution.

5.1.9 Weigh and record the weight of the immersed standard.

5.1.10 Calculate the apparent density of the glass standard as follows:

$$\text{Apparent density} = \frac{A}{(A-B)}$$

where:

A = weight of the glass standard in air, gm.

Downloaded from http://www.everyspec.com

B = weight of the glass standard in water, gm.

5.1.11 Calculate the density (in vacuo) of the glass standard as follows:

Density (in vacuo) =

$$d_1\left[1 - 0.0012\left(\frac{1}{d_1} - \frac{1}{8.4}\right)\right]$$

where:

d_1 = apparent density multiplied by the density of water at 70°F. gm/cc.

8.4 = Density of brass weights, gm.

5.1.12 Calculate the correction factor (F_c) which is applied to the apparent densities of the sample.

$$F_c = \frac{d_s}{d_a}$$

where:

d_s = density (in vacuo) of glass standard, gin/cc.

d_a = apparent density of glass standard, gin/cc.

5.2 Determine the density (in vacuo) of the specimen by following the procedure described for the determination of the glass standard paragraph 5.1 and calculate the results as follows:

5.2.1 Calculate the apparent density of the specimen as follows:

$$\text{Apparent density} = \frac{A}{(A-B)}$$

where:

A = weight of the specimen in air, gm.

B = weight of the specimen in water, gm.

5.2.2 Calculate the density (in vacuo) of the specimen as follows:

Density (in vacuo), gm/cc = $d_a \times F_c$ 60

where:

d_a = apparent density of the specimen.

F_c = Correction obtained in the determination of the glass standard (5.1).

Note. Where a series of determinations are being made, a check with the glass standard should be made at least once after every 6 weighings.

Downloaded from http://www.everyspec.com

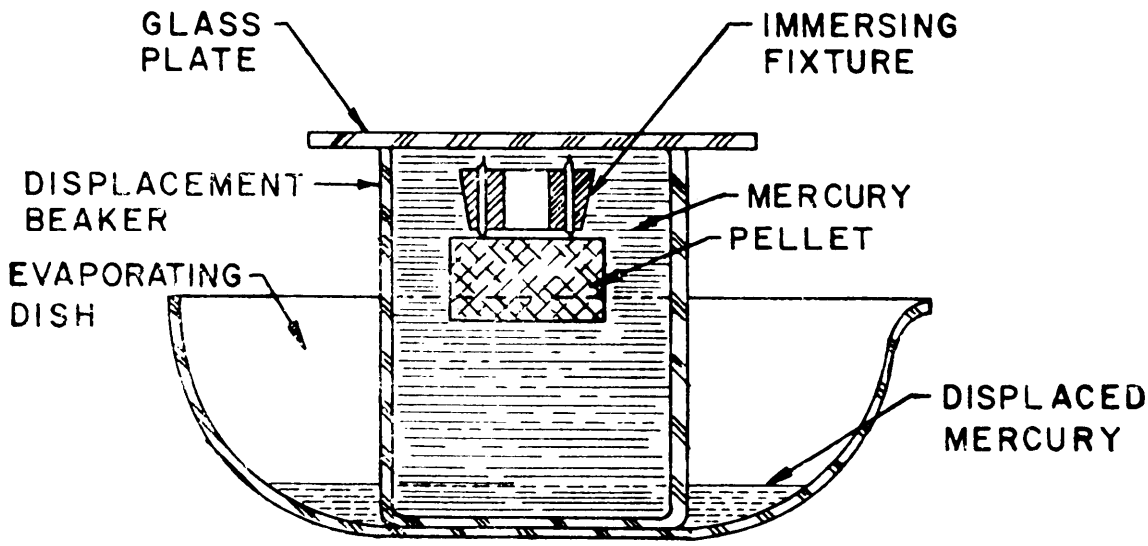

FIGURE 1. *Equipment set up for determining specifk gravity.*

Downloaded from http://www.everyspec.com

Downloaded from http://www.everyspec.com

METHOD 203.1
SPECIFIC GRAVITY
(MERCURY DISPLACEMENT METHOD)

1. SCOPE.

1.1 This method is used for determining the specific gravity of explosive pellets by displacing a volume of mercury equal to the volume of the pellet.

2. SPECIMEN.

2.1 The specimen shall consist of an accurately weighed explosive pellet containing no sharp comers. The pellet should be of sufficient size to allow easy immersion with the displacement apparatus (see Figure 1) but should not displace more than 200 gm. of mercury.

63/64

3. APPARATUS.

3.1 Glass beaker with ground top.

3.2 A piece of flat glass plate of sufficient sise to completely cover the top of the beaker.

3.3 A semi-hard rubber perforated plate, pierced at each comer with sharp pointed pins so that about one half inch of pin protrudes from each side.

3.4 An evaporating dish to catch the excess mercury.

3.5 Mercury, clean.

4. PROCEDURE.

4.1 Fill the beaker with clean mercury insert the rubber plate and level off the mercury by pressing down with the flat glass plate until it is even with the top of the beaker.

4.2 Place a pellet beneath the prongs of the rubber plate and level the mercury as before. Catch the excess mercury in a clean evaporating dish. (See fig. 1.)

4.3 Weigh the mercury displaced by the pellet.

4.4 CaIculate the specific gravity of the pellet as follows:

$$\text{Specific gravity} = \frac{13.54W}{W_1}$$

where:

W = weight of sample, gm.

W_1 = weight of displaced mercury, gm.

Downloaded from http://www.everyspec.com

Downloaded from http://www.everyspec.com

METHOD 203.2
SPECIFIC GRAVITY (BOTTLE METHOD)

1. SCOPE.

1.1 This method is used for determining the specific gravity of explosives by comparing the density of the explosive with the density of water, using a specific gravity bottle.

Note. This method contains instructions for determining the specific gravity of explosives containing water insoluble components. Explosives containing water soluble components can be determined by substituting, for the \vater medium, an appropriate liquid medium in which the explosive components exhibit no solubility. However, the specific gravity of the substituted medium at the desired temperature must be known or determined.

65/66

2. SPECIMEN.

2.1 The specimen shall consist of approximately 100 gm. of explosives weighed to within 20 mg.

3. APPARATUS.

3.1 Torsion balance, 1000 gm. capacity, sensitivity 0.1 gm.

3.2 Torsion balance, 200 gm. capacity, sensitivity 0.02 gm.

3.3 Wooden stirring rod (1.26 inches x 3 inches).

3.4 Specific gravity bottle (500 ml. glass stoppered Erlenmeyer flask, stopper groved to allow excess water to escape.)

4. PROCEDURE.

4.1 Fill the specific gravity bottle completely with water at the desired temperature (this determination is usually made at 25° ± 2°C.) .

4.2 Press the ground glass stopper firmly into place making certain that there are no air bubbles in the top of the bottle.

4.3 Dry the outside of the specific gravity bottle.

4.4 Place the water-filled specific gravity bottle on a 1000 gm. torsion balance and weigh.

4.5 Empty the water from the bottle.

4.6 Place the specimen into the bottle and add approximately 400 ml., of water at the desired temperature.

4.7 Stir vigorously with the wooden stirring rod, then fill the bottle completely with water.

4.8 Stopper, dry and weigh the specific gravity bottle with its contents.

4.9 Calculate the specific gravity of the sample as follows:

$$\text{Specific gravity, °C./°C.} = \frac{AF}{A + B - D}$$

where:

A = weight of specimen, gm.

B = weight of specific gravity bottle and medium (water or solvent), gm.

D = weight of specific gravity bottle, specimen, and medium, gm.

F = specific gravity of medium at °C./°C.

Downloaded from http://www.everyspec.com

Downloaded from http://www.everyspec.com

METHOD 204.1
GRANULATION (DRY METHOD)

1. SCOPE.

1.1 This method is used for determining the granulation of low sensitivity explosive.

2. SPECIMEN.

2.1 The specimen shall consist of approximately 100 gm. of the explosive weighed to within 0.1 gm.

3. APPARATUS.

3.1 Set of U.S. Standard sieves conforming to Specification RR–S--366, with a receiving pan.

3.2 Mechanical shaker, geared to produce 300 ± 15 gyrations and 150 ± 10 taps of a striker per minute.

4. PROCEDURE.

4.1 The specimen shall be placed on the specified nest of sieves properly superimposed and assembled with a bottom pan.

4.2 The sieve or nest of sieves shall be covered and then shaken for 3 minutes by means of a mechanically operated sieve shaker.

4.3 The portions retained or passed by the various sieves shall be weighed and the results calculated to a percentage basis.

4.4 Calculations.

$$\text{Retained, percent} = \frac{A + B}{} \times 100$$

$$\text{Through, percent} = \frac{W - (A+B)}{W} \times 100$$

where:

A — weight retained on designated sieve, gm.
B — weight retained on sieves nested above designated sieve, gm.
W — weight of sample, gm.

Downloaded from http://www.everyspec.com

Downloaded from http://www.everyspec.com

METHOD 204.2
GRANULATION (WET METHOD)

1. SCOPE.

1.1 This method is used for determining the granulation of sensitive explosive insoluble in water.

2. SPECIMEN.

2.1 The specimen shall consist of approximately 50 gm. of the explosive weighed to within 0.1 gm.

3. APPARATUS.

69

3.1 Spray Nozzle. Fit a gooch crucible (No. 4, Coors porcelain crucible containing about 75 openings, approximately 0.07 cm. in diameter has been found satisfactory) over a Number 8 one-hole rubber stopper fitted with a short piece of glass tubing to which is attached a length of rubber hose approximately 1 cm. inside diameter. The free end of the hose is connected to the water tap and the Gooch crucible at the other end acts as a spray nozzle.

3.2 Glass stirring rod equipped with a rubber policeman.

3.3 Beakers, 600 ml. and 400 ml.

3.4 Set of U. S. standard sieves conforming to Specification RR-S-366.

3.5 Filtering crucibles, medium porosity sintered glass.

3.6 Suction filtering apparatus.

3.7 Oven.

4. MATERIALS.

4.1 Water-clear, clean tap water.

4.2 Methanol.

4.3 Suitable wetting agent such as dioctyl sodium sulfo succinate (Aerosol OT), solution in water.

5. PROCEDURE.

Transfer the specimen to a 600 ml. beaker containing approximately 300 ml. of a 2 percent solution of wetting agent.

5.2 With the aid of a rubber policeman attached to a glass stirring rod stir the mixture for a few minutes, wetting the sample thoroughly and breaking up as many of the aggregates as possible.

5.3 Use a spray nozzle under tap water pressure, to quantitatively transfer this mixture to the uppermost sieve of a set of the specified sieves nested in order of decreasing size, the largest mesh being placed on top.

Warning: This assembly should be set up near a water tap and drain and provision should be made to prevent transfer of the explosive to the drain.

5.4 Adjust the pressure of the spray so that when the spray strikes the specimen at an angle approximately perpendicular to the screen from a height of 2 to 3 inches, it is possible to wash the specimen back and forth across the sieve without splashing any of the material over the side of the sieve. Move the spray about the screen at a rate such that the spray would traverse the diameter of the screen 1 to 2 times per second.

5.5 Gently crush the wet agglomerates on the top sieve with the aid of a rubber policeman and continue the washings of the material back and forth across the sieve with the water spray until all the agglomerates are broken and only individual crystals larger

Downloaded from http://www.everyspec.com

than the mesh of the sieve remain on the sieve.

Caution: The rubber policeman shall be used in breaking up the agglomerates only the uppermost sieve.

5.6 Remove the top sieve and add a few drops of a 10 percent solution of wetting agent to the material on the next sieve and wash with the water spray as before for 5 minutes or until no change is noticed in the amount of crystals remaining.

5.7 Repeat this procedure for each of the sieves.

5.8 After the washings have been completed, transfer the portions remaining on each of the screens to separate 400 ml. beakers as follows:

a. Hold the screen in an almost vertical position and with a moderate spray of water from the spray nozzle, gently wash the material to the lower part of the screen by drawing the spray back and forth across the screen, beginning at the top and moving slowly down the screen as the crystals move down.

b. Collect the material at the lower part of the sieve and wash it into the beaker with a stream of water from a wash bottle.

5.9 Quantitatively transfer the explosive in each of the beakers to separate previously tared fritted glass filtering crucibles of medium porosity.

5.10 Aspirate the crucible during the transfer process and aspirate the crucible and contents for approximately 2 minutes after the transfer has been completed.

5.11 Dry the crucible and contents in an oven to constant weight, cool in a desiccator and weigh.

5.12 Calculate the percentage passing through each sieve as follows:

Percent through U. S. Standard Sieve==

$$\frac{W - (A + B)}{W}$$ 70

where:

A = weight retained on U.S. Standard Sieve, gm.

B = weight retained on sieves nested above U.S. Standard Sieve, gm.

W = weight of specimen, gm.

Downloaded from http://www.everyspec.com

METHOD 205.1
AVERAGE PARTICLE DIAMETER
(FISHER SUB-SIEVE SIZER)

1. SCOPE.

1.1 This method is used to determine the average particle diameter of explosives that are relatively insensitive (capable of safely being pressed) and made up of particles whose average particle diameter falls in the range 0.2 to 50 microns.

2. SPECIMEN.

2.1 The specimen shall consist of an accurately weighed portion (to within 0.01 gin.) of sample equal in grams to the density of the sample.

71

3. APPARATUS.

3.1 Fisher Sub-Sieve Sizer, composed of an air pump, an air pressure regulator, a precision bore sample tube, a standardized double range air flow-meter and a calculator chart, along with accessory equipment necessary to correlate these parts in a unit. (See figs. 1 and 2.)

4. PROCEDURE.

4.1 Check the apparatus as follows:

a. Check the level of water in the standpipe of the pressure regulator. The water level, as observed through the round window located in the upper left hand side of the front panel, (fig. 2), should coincide exactly with the calibration mark on the standpipe. If necessary, adjust the water level by adding or removing water through the glass intake arm extending through the top of the instrument cabinet. This intake arm should be stoppered except when adjustments are being made. The water level should be checked only when the sample tube has been removed from the instrument.

b. Check the condition of the drying agent in the drying tube by observing the tube through the small window in the left side of the cabinet. Use an indicating tape drying agent so that the condition of the drying agent may be determined visually at any time.

4.2 Check the adjustment of the sample packing assembly as follows:

a. Screw one of the porous plugs, (fig. 1), to the plug manipulator.

b. Place a paper disc over one end of the sample tube and push the plug into the sample tube for a distance of approximately 0.5 inch, with the perforated surface of the plug against the surface of the paper disc, forcing the paper to crimp around the edge and precede the plug into the sample tube.

c. Remove the plug manipulator and place the sample tube in a vertical position with the paper side of the plug up.

d. Place a second paper disc over the top of the sample tube, attach the second porous plug to the manipulator, and force the plug and paper disc down into the sample tube until contact is made with the lower disc and plug. Remove the manipulator.

e. Place the sample tube on the brass post beneath the rack and pinion (fig. 2) with the lower plug in contact with the upper end of the brass plug, and lower the rack until the flat bottom end comes in firm contact with the upper plug.

f. The tip of the pointer, carried on the cross bar attached to the upper end of the

Downloaded from http://www.everyspec.com

rack, should coincide exactly with the base line on the calculator chart. If necessary Ioosen the set screw holding the lower brass past in its mount and adjust the height of the post until the tip of the pointer does coincide exactly with the base line.

4.3 Screw one of the porous plugs to the pplLW manipulator. (See fig. 1.)

4.4 Lay a paper disc over one end of the sample tube and push the plug into the sample tube for a distance of approximately 0.5 inch, with the perforated surface of the plug against the surface of the paper disc, forcing the paper to crimp around the edges and precede the plug into the sample tube.

4.5 Place the sample tube in a vertical position with the paper side of the plug up.

4.6 Transfer the specimen to the sample tube with the aid of a small funnel. Tap the side of the tube to settle the powder.

4.7 Lay a second paper disc over the top of the sampIe tube, attach the second porous plug to the manipulator, and force the plug and paper disc approximately 2 inches down into the sample tube. Remove the plug manipulator.

4.8 Lower the rack until the pointer lies on the base line. Shift the calculator chart until a porosity value of 0.80 is indicated by the pointer on the porosity scale located along the bottom edge of the calculator chart. Do not move the chart after making this setting until the determination has been completed.

Note. The porosity value is a measure of the degree of packing of the sample.

4.9 Raise the rack and place the sample tube on the brass post beneath the rack and pinion (fig. 2) with the lower plug in contact with the upper end of the brass post.

4.10. Lower the rack until the flat bottom end comes in contact with the upper plug. Continue lowering the rack by turning the pinion knob manually until the tip of the pointer coincides with a point on the sample height curve on the chart. The sample has now been packed to a porosity valve of 0.80.

4.11 Raise the rack and remove the sample tube.

4.12 Adjust the initial level of the water meniscus in the manometer tube, located over the calculator chart, by means of the manometer control knob so that the meniscus coincides with the upper edge of the metal cross bar attached to the rack when the tip of the pointer coincides exactly with the base line on the calculator chart. If adjustment of the water meniscus can not be made because of too little water in the manometer tube, water may be added through the top of the manometer tube. 72

4.13 Turn the range control knob, located at the extreme upper right of the front panel to the “Lo” position.

4.14 Mount the sample tube, without disturbing the sample in any way, between the rubber-cushioned supports to the sample tube holder. Screw the upper cap down onto the sample tube until an airtight seal is obtained at both ends.

4.15 Plug the line cord into a 110-Volt, 60 cycle alternating current line and throw the electrical switch at the lower right-hand corner of the front panel to the “On” position.

Note. This turns on the air pump as well as the pilot lamp which illuminates the tip of the bubbler tube in the pressure regulator standpipe, as observed through the round window on the lower left-hand corner of the front panel and the level of water in the standpipe as observed through the upper window.

4.16 Adjust the pressure control knob un-

Downloaded from http://www.everyspec.com

til the bubbles raise in the standpipe at the rate of 2 to 3 per second.

4.17 Allow the water level in the manometer tube to rise to a maximum level.

4,18 Without disturbing the chart, turn the rack up until the upper edge of the cross bar coincides with the water meniscus in the manometer. From the location of the tip of the pointer, read the average particle diameter in microns from the chart. With the range control in the "Lo" position, the particle diameters within the range of 0.2 to 20.0 microns may be read directly from the chart. With the range control in the "Hi" position, the particle diameters are obtained by doubling the readings of the chart.

4.19 Repeat the above determination at lower porosities taking care to readjust the chart as required, continuing until the bed is very tightly compressed. Make all of these determinations on the same sample.

4.20 Plot the porosities against the corresponding values of average particle diameter, and record the value of the average particle diameter in the range of porosities within which a change in porosity does not appreciably affect the determined value for the average particle diameter.

4.21 Record the porosity range used to obtain the average particle diameter.

73

Downloaded from http://www.everyspec.com

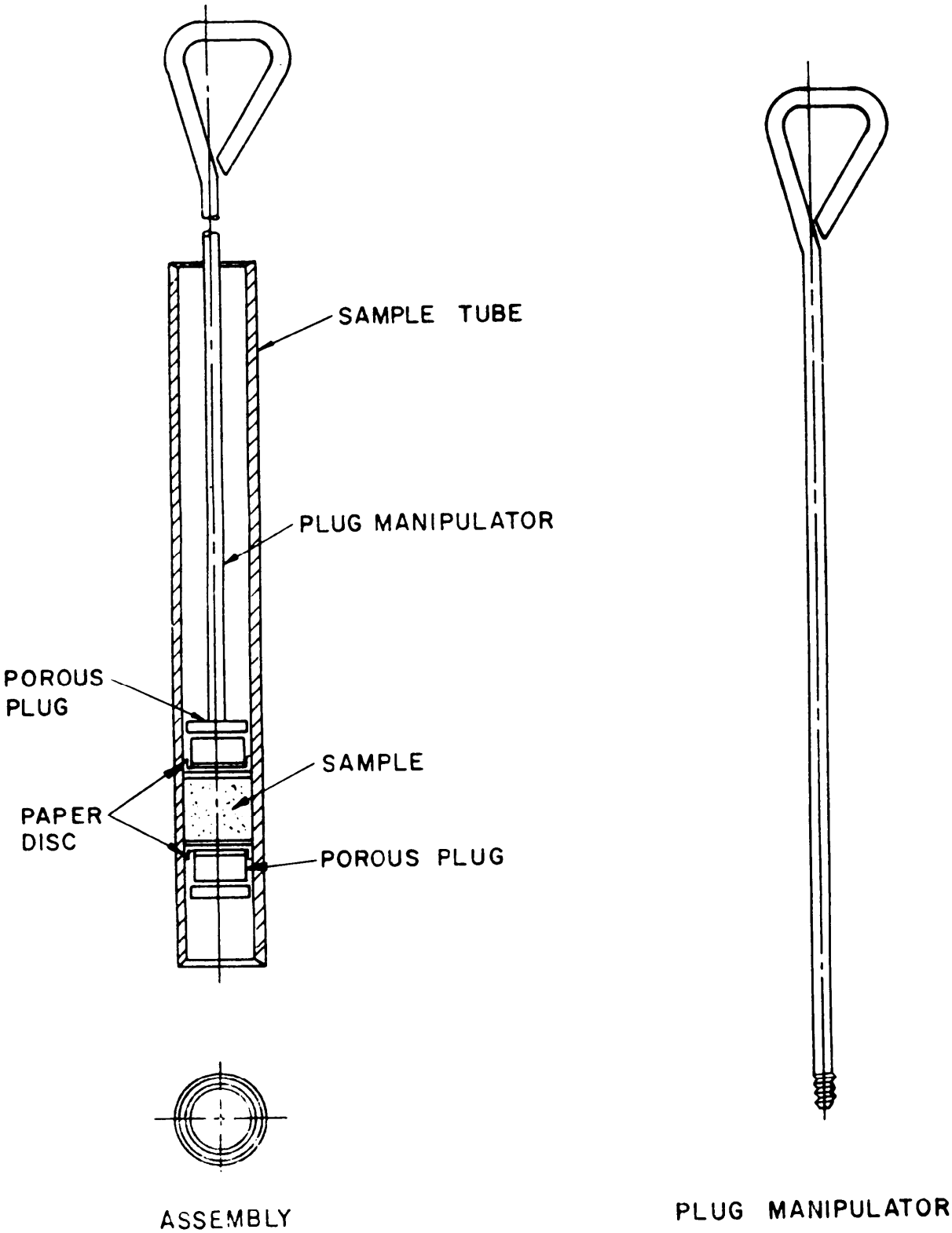

74

FIGURE 1.

Downloaded from http://www.everyspec.com

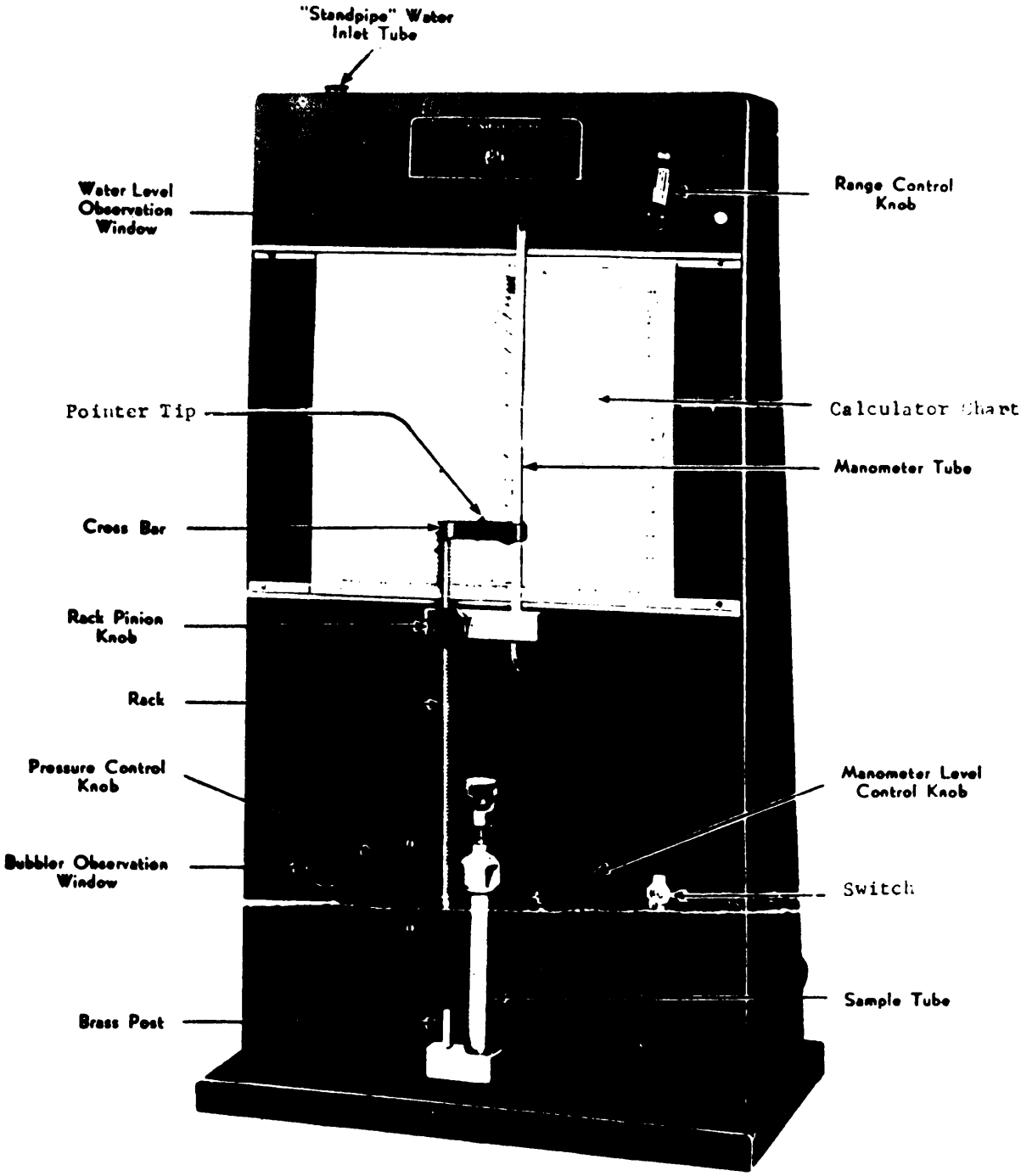

FIGURE 2. *The Fisher sub sieve sizer.*

Downloaded from http://www.everyspec.com

Downloaded from http://www.everyspec.com

METHOD 206.1
PARTICLE SIZE (MICROSCOPIC METHOD)

1. SCOPE.

1.1 This method is used for determining the particle size and distribution of explosives of a sensitive nature whose particles are of a fairly uniform size lying in the sub-sieve size micron range (less than 44 microns).

2. SPECIMEN.

2.1 The specimen shall be prepared as follows :

a. Transfer a small portion of dry sampie, about the size of a pinhead, to a glass slide.

b. Disperse the sample on the slide in one drop of paraffin oil with the side of a rubber policeman.

c. Cover the dispersion with a cover glass.

3. APPARATUS.

3.1 Use a microscope equipped with a Filar type micrometer eye-piece. The Filar type micrometer eye-piece consists of a micrometer screw which acts on a slide carrying a movable wire which moves in a vertical plane across the field of observation. The scale on the handle of the micrometer screw must be accurately divided into 100 equal graduations. Tne micrometer eye-piece is equipped with a fine fixed line running through the center of the field, parallel to the axis of the screw, to serve as a guide in orienting the object with reference to the direction of motion of the movable wire. A scale placed in the field and ruled in intervals of 0.5 mm. serves for counting ‘the revolutions of the screw. Every second interval of the scale is numbered. The eye-piece must have a magnification approximately 12.5x and must fit securely into the tube of the microscope.

3.2 Logarithmic probability paper is graph paper in which the graduations along the ordinate are scaled in proportion to the cumulative frequency of the common density function. The graduations along the abscissa are scaled in proportion to the logarithmic scale.

3.3 Standard slide for calibrating.

4. PROCEDURE.

4.1 Preparation of work sheet.

4.1.1 Prepare a table similar to the table given on the accompanying work sheet.

4.1.2 In the columns labeled “Cell Boundaries” and “Cell Midpoint” insert the respective values shown in the work sheet. If larger crystals are found in the sample than would be included in the cell boundaries listed in the work sheet, extend the table in terms 00.5 micron cells to include larger particles.

Note. The word “cells” is used here in the statistical sense to describe the arbitrary subdivision of the crystal size distribution established to permit group handling of the data.

The cell boundaries are the upper and lower limits of each statistical cell in ascending order.

The cell midpoint is defined numerically as one-half the sum of the upper and lower limits of a specific cell.

4.1.3 Place the standard slide in the field and determine the number of micrometer dial readings which are equivalent to 1 micron.

4.1.4 Calculate the micrometer dial readings which are equivalent to the upper and

Downloaded from http://www.everyspec.com

lower boundaries of each cell according to the following formula:

Micrometer dial reading = BA

where:

A = cell boundary in microns.

B = number of micrometer dial units equivalent to 1 micron.

4.1.5 Record the calculated micrometer dial readings in the first column of the table on the same line as the equivalent cell boundaries.

4.2 Place the specimen slide on the microscope platform and bring the crystals into focus using the designated magnification.

4.3 Measure the distance between opposite sides of each of 100 crystals to the nearest 0.1 unit in afield expressed in terms of divisions on the Filar micrometer scale, taking crystals near the center of the field. When measuring crystals in an aggregate or flocculate, measure every crystal in the group; in going from one group of crystals to another, measure the individual crystals between the two groups. Do not attempt to select crystals for measurement on a basis of personal judgment of the apparent distribution of the field.

4.4 Record each crystal measured in the corresponding line under the column marked "Frequency" as shown in the work sheet.

4.5 Repeat the above procedure for 100 crystals in another field of the slide.

4.6 In the column of the table labeled "Frequency, Totals" record the total numbers of crystals found in each cell.

4.7 Calculate the cumulative frequency in percent for each cell midpoint. Since there are 200 measurements the cumulative frequency in percent is equal to one-half the sum of all crystals smaller than and "equal to" each cell midpoint. The cumulative frequency for the largest cell midpoint, therefore, will be 100.0 percent.

4.8 Plot the cumulative frequency in percent as the abscissa against the corresponding cell midpoints as ordinates on logarithmic probability paper.

4.9 Draw a straight line through the two plotted points adjacent to the 50 percent point and extend the line in both directions beyond the plotted points.

4.10 Check the deviation of the points from the line and proceed as follows:

4.10.1 If the plotted points between the 1 percent point and the 50 percent point deviate from the line drawn by no more than 0.3 micron, as read from the graph, and if the plotted points between the 50 percent point and the 95 percent point deviated from the drawn line by less than 1 micron, determine the geometric mean and standard deviation as described below.

4.10.2 If the deviation of any of the plotted points is greater than that specified above, measure 200 additional crystals. If the second set of measurements shows less deviation from the line than that specified above, discard the first set of measurements and retain and report the second set of measurements as described below. If the deviation of the second set of measurements is also greater than that specified above, combine the two sets of data, calculate the cumulative frequency distribution for the 400 measurements, plot as described above and report the results of the 400 measurements described below.

4.11 Read and record the ordinate that is equivalent to the 50 percent point on the abscissa. Report this value, expressed in microns, as the geometric mean of the sample.

4.12 Read and record the ordinate that is equivalent to the 84.13 percent point on the abscissa.

Downloaded from http://www.everyspec.com

4.13 Calculate the geometric standard deviation according to the following formula:

$$\text{Geometric standard deviation} = \frac{F}{G}$$

where:

F = value of ordinate at 84.13 percent point.

G = geometric mean.

79/80

Downloaded from http://www.everyspec.com

Downloaded from http://www.everyspec.com

METHOD 207.1
SETTLING NUMBER

1. SCOPE.

1.1 This method is used for determining the settling number of a finely granulated explosive material by comparing the turbidity of the material in a suspension at the start and end of a time interval.

2. SPECIMEN.

2.1 The specimen shall consist of exactly 0.500 gm. of explosive dried at 100° ± 5°C. for 1 hour.

3. APPARATUS.

81

3.1 Beaker, 25-ml.

3.2 Vacuum apparatus (Fisher Filtrator has been found satisfactory).

3.3 Stirring rod, glass.

3.4 Graduated cylinder, 50-ml. glass stoppered.

3.5 Spectrophotometer — quartz ultraviolet.

3.6 Stop watch.

4. MATERIAL.

4.1 Glycerin-water mixture, 70/30 — prepared by diluting 350 ml. of glycerin to the mark with water in a 500 ml. volumetric flask.

4.2 Dioctyl sodium sulfosuccinate (5 percent by volume) —commercially available as Aerosol OT.

5. PROCEDURE.

5.1 Through the procedure the temperature should be maintained at 25° ± 2°C.

5.2 Place specimen in a 25 ml. beaker and add 7 drops of 70/30 glycerin-water mixture.

5.3 Work the mixture into a smooth paste making sure that all lumpy material is broken up.

5.4 Add to the beaker five drops of aerosol OT solution and 10 to 15 ml. of the 70/30 glycerin-water mixture.

5.5 Stir the contents of the beaker vigorously by means of a stirring rod.

5.6 De-aerate the mixture for 10 minutes by placing the beaker and its contents in a vacuum of approximately 22 inches.

5.7 Pour the contents of the beaker into a 50 ml. glass stoppered graduate and transfer quantitatively the remaining portion of the sample into the graduate with additional portions of 70/30 glycerin-water mixture.

5.8 Dilute the contents of the graduate to the mark with 70/30 glycerin-water mixture and shake the mixture for about 0.5 minute, then allow the graduate and its contents to stand for approximately an additional 0.5 minute.

5.9 After the 0.5 minute has elapsed, agitate the contents of the graduate slowly by inverting the graduate several times.

5.10 Pour the contents into a spectrophotometric silica cell having a width of approximately 1 cm. until a column of liquid 38 mm. in height is obtained. At the instant of pouring, start a stop watch and exactly 5 minutes later determine the optical density of the mixture at a wave length of 350 millimicrons using a spectrophotometer.

Downloaded from http://www.everyspec.com

5.11 Determine the optical density of the mixture again after standing exactly thirty minutes after the first optical density determination.

5.12 As a reference use a similar silica cell containing 70/30 glycerin-water mixture.

5.13 Calculate the settling number as follows :

$$\text{Settling number} = \frac{A}{B}$$

where:

A = Optical density determined at the end of the 30 minute interval.

B = Optical density determined at the end of the 5 minute interval.

82

Downloaded from http://www.everyspec.com

METHOD 208.1
HYGROSCOPICITY (EQUILIBRIUM METHOD)

1. SCOPE.

1.1 The test method is used for determining the hygroscopicity of explosives.

2. SPECIMEN.

2.1 The specimen shall consist of approximately 5 gm. of the dried explosive weighed to within 0.2 mg.

3. APPARATUS.

3.1 Weighing bottle (glass) with cap style stopper: diameter 60 mm., depth 30 mm.

83/84

Warning: The hygroscopicity of initiator and primer compositions and other similar sensitive material must be conducted using a Teflon cover rather than a ground glass cover to prevent the sample from being ignited by friction between the ground glass joint.

3.2 Desiccator containing sulfuriC acid-water solution (See Table 1) for producing the desired percent relative humidity at 30°C.

TABLE I

Desired relative humidity at 30°C, ± 0.25°C	Percent H_2SO_4	Specific Gravity	
		at 60° F/60°F	86°F/60°F
20	59.2 ± 0.5	1.493	1.481
50	43.3 ± 0.5	1.340	1.329
60	38.5 ± 0.5	1.294	1.284
70	33.4 ± 0.5	1.250	1.240
90	18.6 ± 0.5	1.132	1.123

3.3 Oven.

3.4 Desiccator containing an indicating desiccant.

4. PROCEDURE.

4.1 Transfer the dried specimen to a tared dish equipped with a suitable cover.

4.2 Place the dish and contents, with cover removed, in a humidor maintained at the specified conditions of temperature and relative humidity. (See Table 1.)

4.3 Weigh the dish and contents at twenty-four hour intervals, with "the cover on, until the change in weight between weighings is no greater than 0.2 mg.

4.4 Calculate the gain in weight of the sample material to percentage of hygroscopicity at the conditions specified as follows:

$$\text{Hygroscopicity, percentage} = \frac{100\ (B-A)}{A}$$

where:

A = Weight of dry sample, gm.

B = Weight of sample after conditioning at the specified temperature and relative humidity.

Downloaded from http://www.everyspec.com

Downloaded from http://www.everyspec.com

METHOD 209.1
MELTING POINT (CAPILLARY METHOD)

1. SCOPE.

1.1 This method is used for determining the melting point of single component explosives to be used as a criteria of purity.

2. SPECIMEN.

2.1 The specimen shall consist of a portion of the sample (not exceeding 5 gin.) ground to pass through a 100 mesh sieve and then dried in an oven at a temperature below its approximate melting point.

3. APPARATUS.

3.1 Bath. The bath consists of a 1 to 2 liter beaker that is about three fourths full of suitable oil. It is equipped with a mechanical stirrer and a source of heat that can be easily regulated. The bath should be placed behind a safety shield.

3.2 Capillary Tubes. Thin walled capillary tubes of uniform diameter, long enough to extend to the top of the bath.

3.3 Thermometer. Accurately standardized total immersion centigrade thermometer.

3.4 Auxiliary Thermometer. Non immersion centigrade thermometer.

4. PROCEDURE.

4.1 Fill the capillary tube with the oven dried specimen to a depth of approximately 4 mm. Compact the sample by tapping.

4.2 Fasten the tube to the standardized thermometer so that the lower end of the tube is in contact with the bulb of the thermometer.

4.3 Suspend the thermometer and capillary tube in the bath so that the bulb is at least 1-1/2 inches from the bottom of the bath. Suspend an auxiliary thermometer about ½ inch from the first thermometer, with its bulb approximately at the height of the middle of the exposed mercury column of the first thermometer.

4.4 Start the stirrer and heat the bath rapidly to within 5°C. of the melting point, and then gradually so that the rise in temperature is not less than 1°C. every 3 minutes or more than 1°C. per minute.

4.5 The melting point is recorded as follows :

4.5.1 For materials that melt sharply consider the melting point to be the temperature of which the meniscus of melted specimen first appears across the capillary tube.

4.5.2 For materials that do not melt sharply, consider the melting point to be the temperature at which the specimen first gives evidence of movement in the capillary, exclusive of shriveling.

4.5.3 For materials that melt over a certain temperature range, two temperatures must be recorded. The temperature at which any portion of the specimen collapses against the side of the capillary tube, as indicated when the line representing the inner wall of the capillary tubes become indistinct, is considered the beginning of the melting range. The end of the melting range is considered the temperature at which the last crystal disappears and the specimen is completely liquefied.

4.6 If the mercury column is completely immersed at the observed melting point temperature, this temperature is reported, with thermometer calibration corrections applied,

Downloaded from http://www.everyspec.com

as the melting point of the sample. If part of the column is exposed, the following correction is added to the observed temperature.

$$\text{Correction} = 0.000159n\ (T - t)$$

where:

n = number of degrees in the exposed mercury column, in °C.

T = uncorrected melting point, in °C.

t = average temperature of the exposed mercury column, in °C.

86

Downloaded from http://www.everyspec.com

METHOD 210.1
SOLIDIFICATION POINT

1. SCOPE.

1.1 This method is used for determining the solidification point of single component explosives to be used as a criterion of purity.

2. SPECIMEN.

2.1 The specimen shall consist of 40 to 50 gm. of the explosive, dried prior to testing.

3. APPARATUS.

87

3.1 Inner test tube-one inch in diameter and 6 inches in length.

3.2 Outer test tube-one and a half inches in diameter and seven inches in length.

3.3 Bottle-large mouth, 1000 ml.

3.4 Stirring rod—glass with loop end.

3.5 Cork stoppers-bored as shown in figure 1.

3.6 Standard thermometer — accurately standardized centigrade thermometer.

3.7 Correction thermometer — nonimmersion centigrade thermometer.

3.8 Apparatus assembled as shown in figure 1.

4. PROCEDURE.

4.1 Transfer the dried specimen to the inner tube of the solidification point apparatus and melt.

4.2 Place the tube in the apparatus and adjust the standard thermometer so that the bulb is in the center of the molten explosive with a correction thermometer in position for the emergent stem correction, about 1 cm. from and adjacent to the middle of the exposed mercury column of the standard thermometer.

4.3 Stir the molten material vigorously by means of the hand stirrer.

4.4 Carefully note the point where the temperature begins to rise when solidification begins. Record the temperature every 15 seconds until the maximum reading is obtained.

4.5 Correct the maximum temperature for emergent stem by adding the value calculated from the formula:

$$\text{Correction } (°C.) = N\,(T - t)\,(0.000159)$$

where:

N = degree in the exposed mercury column.

T = the uncorrected solidification point.

t = average temperature of the exposed mercury column determined by means of a second thermometer suspended so that its bulb is in the mid-point of the exposed mercury column.

0.000159 = the coefficient of expansion of mercury in glass.

4.6 Record the corrected reading as the solidification point of the sample.

Downloaded from http://www.everyspec.com

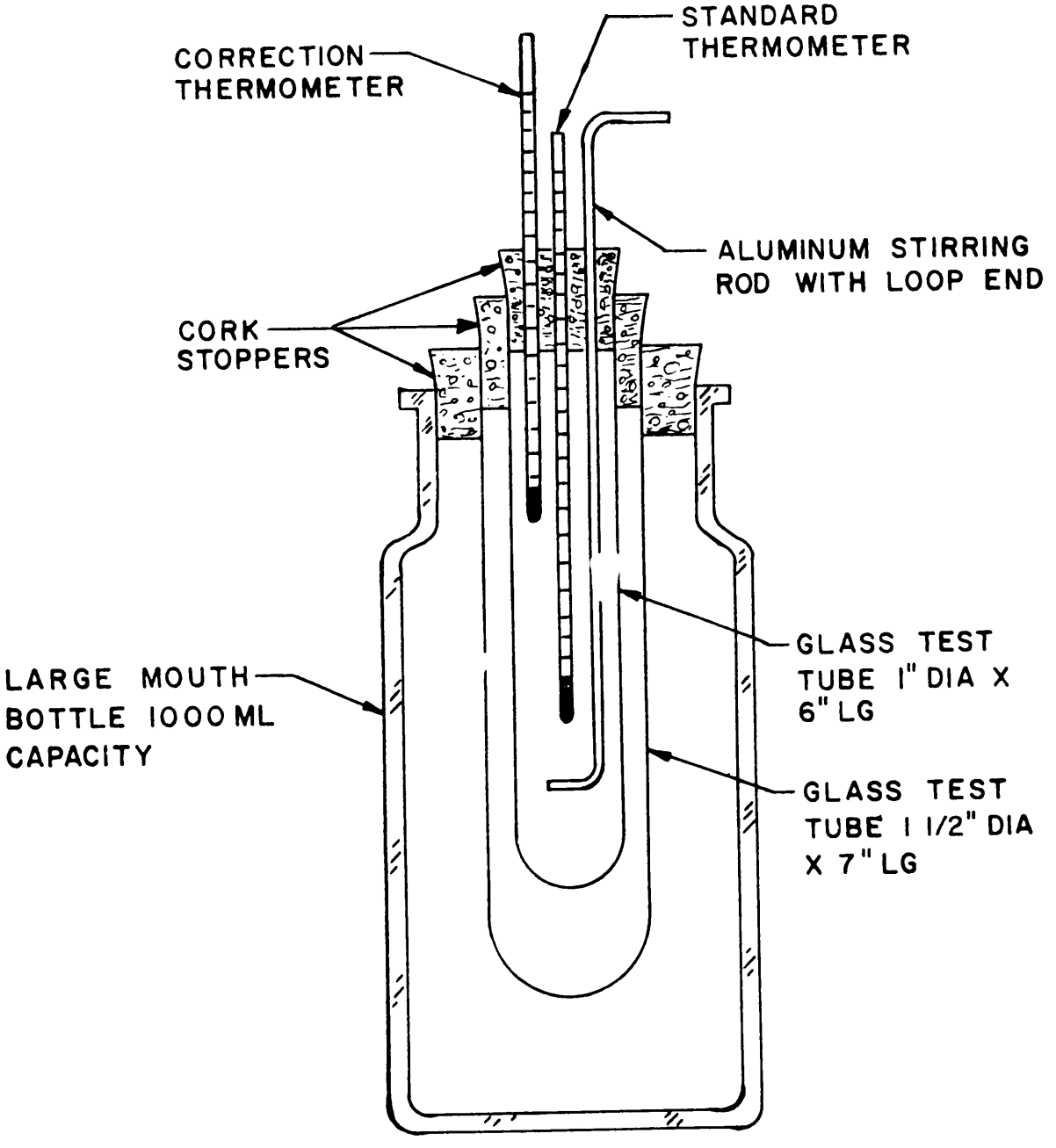

FIGURE 1. *Solidification-point apparatus.*

Downloaded from http://www.everyspec.com

METHOD 211.1
PLASTICITY (ELONGATION METHOD)

1. SCOPE.

1.1 This method is used for determining the plasticity of pliable explosives.

2. SPECIMEN.

2.1 The specimen shall consist of a cylinder of material molded by hand approximately 1 inch in diameter and 250 to 300 gm. in weight.

3. APPARATUS.

3.1 Plasticity mold as specified in item 1, figure 1, the mold is made in two half-section so it can be disassembled. Item 2, figure 1, two brass rings used to elongate the specimen. Item 3, figure 1, two brass caps used to mold the specimen.

3.2 Ruler.

4. PROCEDURE.

4.1 Materials and apparatus should be conditioned and the test conducted at a temperature maintained between 25° and 30°C.

4.2 Place specimen in the half-section mold (item 1, fig. 1) and slip a brass ring (item 2, fig. 1) over each end so that the flanges are toward the center.

4.3 Place the second half-section mold in position, press the composition firmly in at one end and attach the end cup (item 3, fig. 1). Treat the other end similarly.

4.4 Remove the end cups and the half-section molds and adjust the distance between the flanges to 1 inch.

4.5 Hold one ring firmly, and pull the other slowly and steadily along the edge of a graduated rule fixed on a bench so that the cylinder specimen is gradually extended.

4.6 Note the distance between flanges when fractured. This distance, less 1 inch, is the measure of the extension.

Downloaded from http://www.everyspec.com

Downloaded from http://www.everyspec.com

METHOD 211.2
PLASTICITY (MODULUS OF COMPRESSIBILITY METHOD)

1. SCOPE.

1.1 This method is used for determining the plasticity of explosives by determining the modulus of compressibility of the explosive mixture.

2. SPECIMEN.

2.1 The specimen shall consist of three portions of sample each 50.05 ± 0.05 grams prepared as described under "Procedure" for "Preparation of Specimen."

3. APPARATUS.

3.1 Molds. Any suitable mold, similar to that in Figure 1, may be used that will produce a molded pellet of the plastic material with a diameter of 2.00 ± 0.03 inches and a height of 0.75 ± 0.04 inch. The mold shall be designed in such a manner that the excess material retained on the mold shall not be in excess of 0.03 gram. A cylindrical mold having a bore of 2.005 ± 0.005 inches wide and 1.500 ± 0.055 inches in depth has been found to be satisfactory. The cylinder walls of the mold were approximately 1.5 inches thick. The designated weight of sample was placed in the bore of the mold and a hard wood spacer plug 2.00 ± 0.005 inches in diameter and 0.750 ± 0.005 inch thick was forced into the bore of the mold until the upper surface of the plug was flush with upper surface of the mold. A metal plate approximately 5 inches in diameter and approximately 0.25 inch thick was used to apply the pressure to the spacer plug to insure that the upper surface of the plug would not be pushed below the upper surface of the mold. The molded specimen was then removed from, the mold by turning the mold upside down and exerting sufficient pressure upon the spacer plug to extrude the molded specimen.

3.2 Thickness gage. Any suitable thickness gage may be used provided it can, (a) be read accurately to 0.001 inch, (b) subject the specimen being measured to a pressure of 62.5 ± 2.5 grams and (c) has a contact surface at the point of measurement of 45.57 ± 1.53 sq. mm.

3.3 Plasticity press (plastometer). The plastometer shall consist of two parallel plates lying in a horizontal plane. The top plate shall be so arranged that it may be raised or lowered in such a manner that it is always parallel to the bottom plate. The distance between the plates shall be measured by a dial gage graduated in 0.001 inch, attached to the upper plate. The weight of the upper plate, together with all moving parts, shall be 5000 grams. The minimum surface of the plates available for application of pressure to the specimen shall be 4.5 inches by 4.5 inches.

3.4 Stop watch or other timing device.

3.5 Cellophane paper or equivalent, two sheets approximately 8 inches long and 3.625 ± 0.125 inches wide with a maximum thickness of both sheets shall be 0.02 inch.

4. PROCEDURE.

4.1 Preparation of Specimen.

a. Transfer 50.05 ± 0.05 grams of sample to the mold described above.

b. Apply sufficient pressure to consolidate the sample to a diameter of 2 inches ± 0.03 inches and a height of 0.75 ± 0.04 inch by applying the full pressure of the thumbs to the thrust plate of the mold until the sample has been consolidated to the desired diameter.

c. Remove the specimen from the mold

Downloaded from http://www.everyspec.com

and place it between two sheets of glazed paper or cellophane of predetermined thickness.

d. Inscribe a circle having a diameter of 2 inches in the center of the paper and draw a line across the paper perpendicular to the lengthwise direction of the paper at a distance of 2.250 ± 0.063 inches from the center of the circle.

e. Place specimen for test in the circle and use the line described above to center the specimen in the press.

4.2 Condition the press and specimens at 70° ± 2°F. for a minimum of 2 hours prior to the determination and run the determination at a temperature of 70° ± 2°F.

4.3 Measure the thickness of the prepared specimen to the nearest 0.001 inch with the aid of the thickness gage. Take the average of three readings corrected for the thickness of the paper as the thickness of the specimen at zero time.

4.4 Place the specimen in the press in such a manner that it rests on the center of the lower plate of the press.

4.5 Carefully allow the upper plate of the press to fall until the gage of the press has the same reading as the reading recorded on the gage used to measure the thickness.

4.6 Start a stop watch or other suitable timing device and permit the upper plate of the press to fall at a rate not exceeding 0.040 inch during the first 15 seconds of the test. After 15 seconds permit the upper plate of the press to fall free for the remainder of the test.

4.7 At the end of twenty minutes record the thickness of the specimen to the neareat 0.001 inch.

4.8 Report the plasticity of the sample as the average of three results obtained on separate specimens calculated as described below except that if one specimen varies more than 15 percent from the average of the three, it is discarded and the plasticity reported as the average of the remaining specimens. In case two or more specimens vary more than 15 percent from the averages, discard the results and repeat the three tests.

4.9 Calculate the plasticity as follows:

$$\text{Plasticity} = \frac{A - B}{1.30}$$

where:

A = the logarithm to the base 10 of the thickness of the specimen in millimeters at zero time.

B = the logarithm to the base 10 of the thickness of the specimen in millimeters at the end of 20 minutes.

Downloaded from http://www.everyspec.com

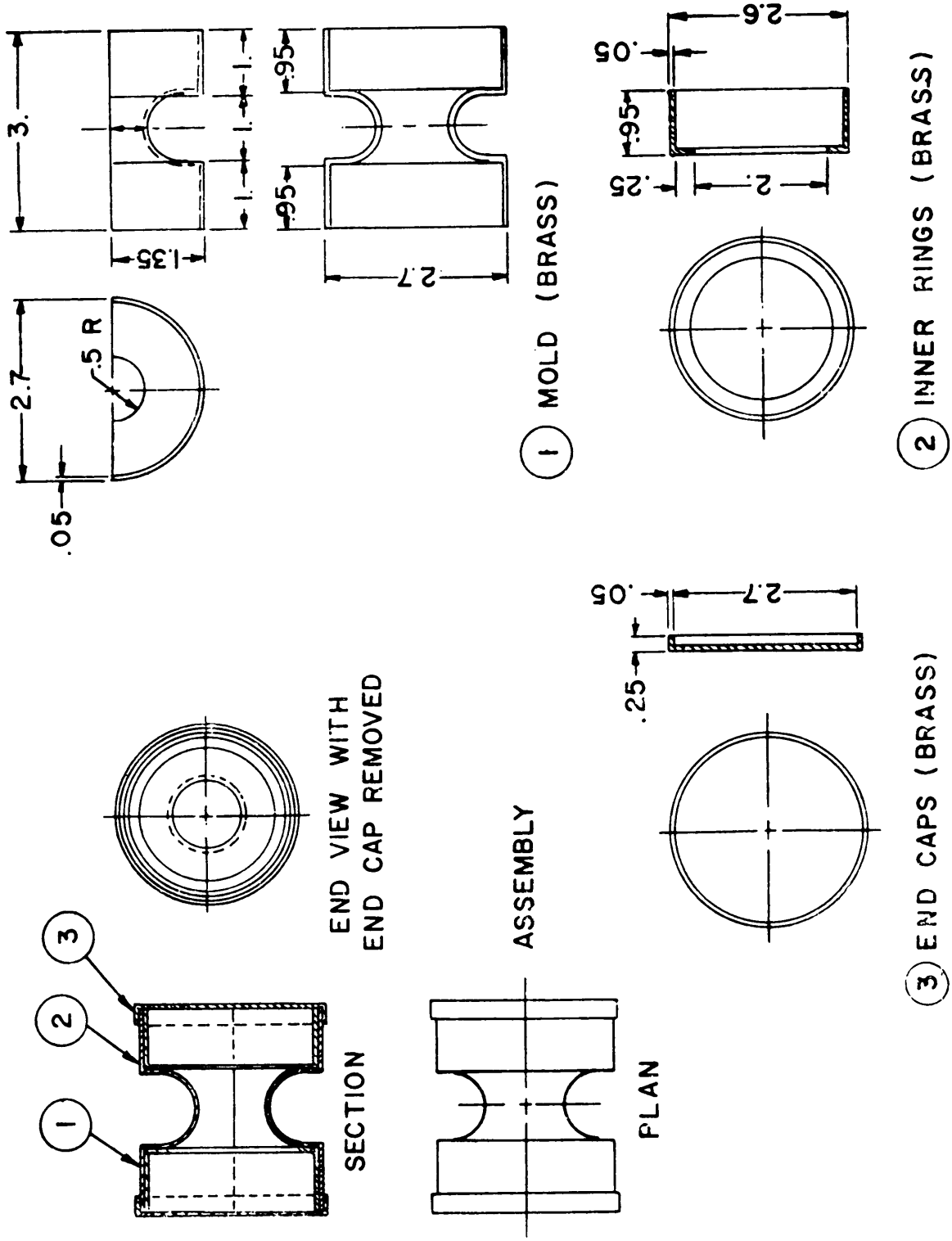

FIGURE 1. *Mold for plasticity test.*

Downloaded from http://www.everyspec.com

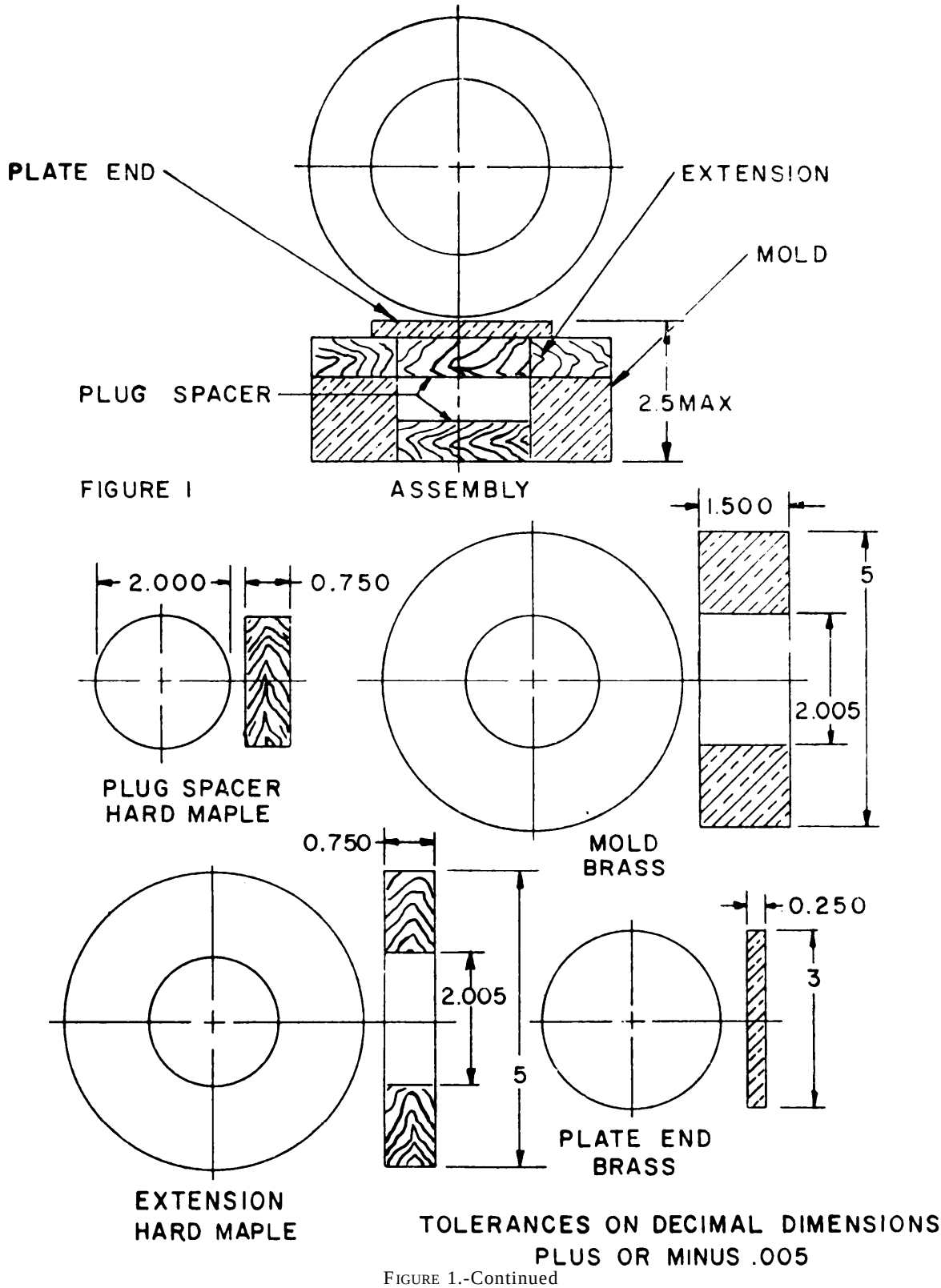

FIGURE 1.-Continued

Downloaded from http://www.everyspec.com

METHOD 212.1
VISCOSITY

1. SCOPE.

1.1 This method is used for determining the Efflux viscosity of T N T and T N T compositions.

2. SPECIMEN.

2.1 The specimen shall consist of approximately 525 ± 25 gm. of the explosive.

3. APPARATUS.

3.1 Efflux viscosimeter-see figure 1.

3.2 Melting pot. Described in Ordnance Corps drawing 81-3-148. The jacket of the melting pot described in the drawing 81-3-148 shall be heated with steam at 10 psi. No control of the temperature need be maintained in the pot other than that obtained by controlling the steam pressure.

3.3 Stop watch, graduated in tenths of a second.

4. PROCEDURE.

4.1 Place the specimen in the melt pot of the efflux viscosimeter and start the agitator.

4.2 Melt the specimen and allow it to flow into the viscosimeter cone.

4.3 Maintain the temperature of the water circulating through the jacket on the viscosimeter cone at 84°C.

4.4 Stir the material in the cone by hand with a thermometer until it is entirely free of lumps and there is no segregation of components of the sample.

4.5 Adjust the temperature of the molten sample to 85°C., then remove the thermometer and the rubber stopper in the bottom of the cone to permit the molten sample to fall from the tip of the upper marker to the tip of the lower marker. The timing shall be started at the instant when the upper indicating pointer pierces the surface of the molten sample and stopped when the surface is broken by the lower indicating pointer.

4.6 This time interval, recorded to the nearest tenth of a second, is the efflux viscosity of the sample.

Downloaded from http://www.everyspec.com

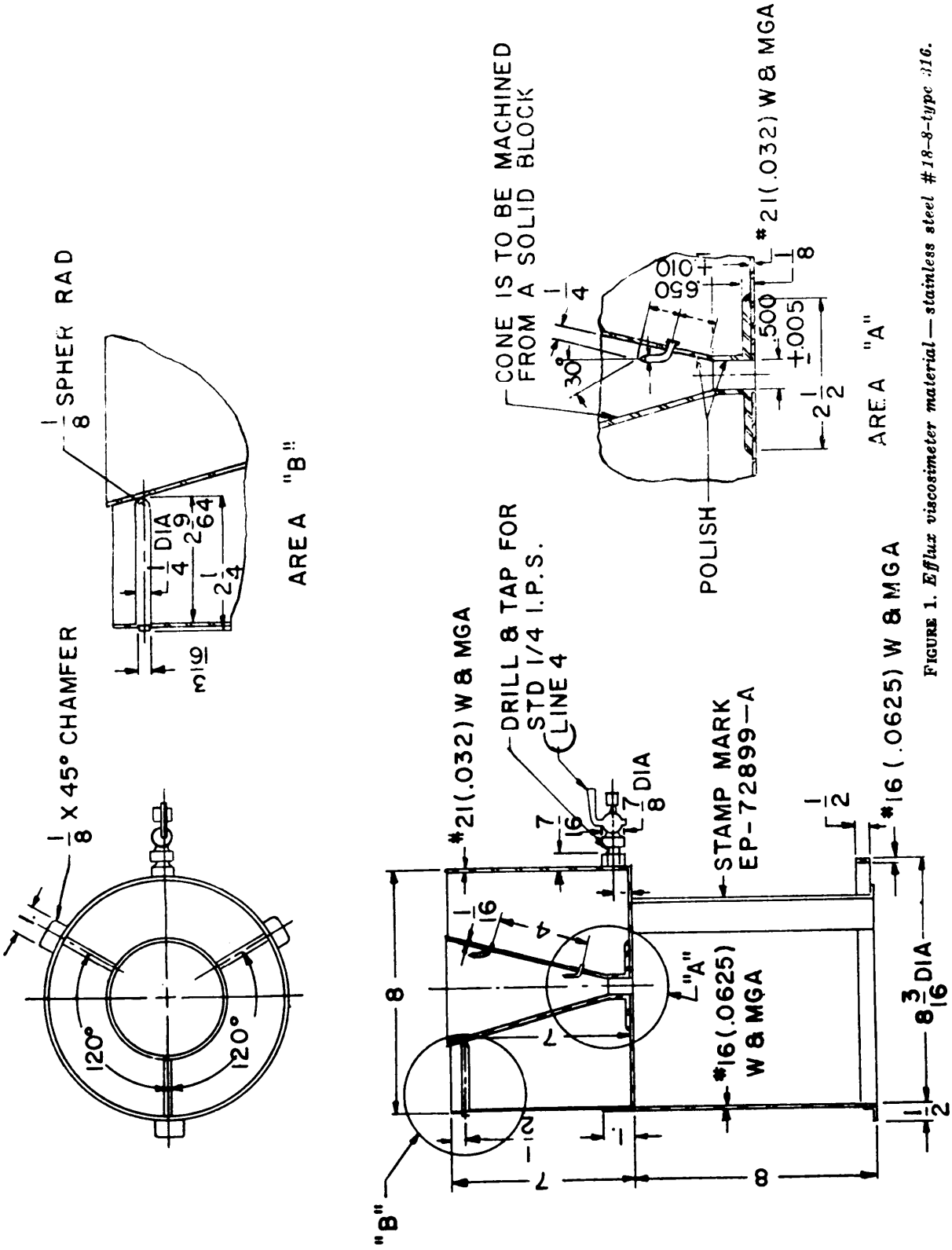

FIGURE 1. *Efflux viscosimeter material—stainless steel #18-8-type 316.*

96

Downloaded from http://www.everyspec.com

METHOD 301.1
SAMPLE PREPARATION (DISSOLUTION)

1. SCOPE.

1.1 This method is used to dissolve an explosive for subsequent determinations.

2. SPECIMEN.

2.1 The specimen shall consist of an accurately weighed portion of the explosive, suitable for the subsequent determinations.

3. APPARATUS.

3.1 Steam bath.

3.2 Stirring rod.

3.3 Watch glass.

3.4 Beaker.

4. MATERIALS.

4.1 Dissolving solvent, such as water, organic solvent or acid or alkali solutions as specified in the applicable method or explosive specification.

5. PROCEDURE.

5.1 Transfer the specimen to a beaker.

5.2 Add sufficient solvent to the beaker to dissolve the specimen. Cover the beaker and heat on a steam bath with occasional stirring to aid the dissolution.

5.3 When the specimen is completely dissolved, remove the covered beaker from the steam bath and allow to cool to room temperature.

5.4 Retain the solution for subsequent determinations.

Downloaded from http://www.everyspec.com

Downloaded from http://www.everyspec.com

METHOD 301.2
SAMPLE PREPARATION
(DISSOLUTION — EXTRACTION)

1. SCOPE.

1.1 This method is used for extracting water soluble material from explosives containing binder or plastic bonding for use in subsequent determinations.

2. SPECIMEN.

2.1 The specimen shall consist of an accurately weighed portion of the explosive suitable for the subsequent determination.

99/100

3. APPARATUS.

3.1 Beakers.

3.2 Steam bath.

3.3 Watch glass.

3.4 Stirring rod.

4. MATERIALS.

4.1 Dissolving solvent, such as benzene, toluene or acetone as specified in the applicable method or explosive specification.

5. PROCEDURE.

5.1 Follow the procedure described in Method No. 301.1 for the dissolution of the specimen.

5.2 To the solution retained for subsequent" determinations, add a volume of distilled water to bring the solvent soluble material out of solution. The volume of water should be at least equal to the volume of solvent used in method 301.1.

5.3 Allow the solution to stand until all precipitated material has settled and retain the beaker and contents for subsequent determinations.

Downloaded from http://www.everyspec.com

Downloaded from http://www.everyspec.com

METHOD 301.3
SAMPLE PREPARATION (EXTRACTION)

1. SCOPE.

1.1 This method is used for extracting soluble ingredients from an explosive for use in subsequent determinations or to prevent it from interfering with subsequent determinations.

2. SPECIMEN.

2.1 The specimen shall consist of an accurately weighed portion of the explosive suitable for subsequent determinations.

3. APPARATUS.

3.1 Beakers.

3.2 Watch glass.

3.3 Steam bath.

3.4 Stirring rod.

3.5 Filtering crucible, sintered glass.

3.6 Suction filtering apparatus.

3.7 Oven.

4. MATERIALS.

4.1 Extracting solvent, such as water, organic solvent or acid or alkali solution as specified in the applicable method or explosive specification,

5. PROCEDURE.

5.1 Transfer the specimen to a beaker.

5.2 Add 100 ml. of solvent to the beaker.

5.3 Cover the beaker with a watch glass and place it on a steam bath.

5.4 Heat the beaker with occasional stirring until all soluble material is in solution as shown by the lack of change in the amount of undissolved material in the beaker.

5.5. Decant the hot supernatant liquid through a filtering crucible, collecting the filtrate in a clean beaker.

5.6 Repeat the extraction with an additional 100 ml of solvent, decanting through the same crucible and adding this filtrate to the filtrate from the first extraction.

5.7 Transfer the residue to the crucible and wash with suitable solvent until free of soluble material, adding the washings to the filtrate solutions.

5.8 Aspirate the residue until no odor of the extraction solvent can be detected.

5.9 Retain the residue and the filtrate for subsequent determinations.

Downloaded from http://www.everyspec.com

Downloaded from http://www.everyspec.com

METHOD 301.4
SAMPLE PREPARATION (LEACHING)

1. SCOPE.

1.1 This method is used for leaching out a soluble ingredient from an explosive for use in subsequent determinations or to prevent it from interfering with subsequent determinations.

2. SPECIMEN.

2.1 The specimen shall consist of an accurately weighed portion of the explosive, suitable for the subsequent determinations.

103/104

3. APPARATUS.

3.1 Filtering crucible, sintered glass.

3.2 Suction filtering apparatus.

3.3 Beaker.

3.4 Oven.

4. MATERIALS.

4.1 Leaching solvent, such as water, organic solvent or acid or alkali solutions as specified in the applicable method or explosive specification.

5. PROCEDURE.

5.1 Transfer the specimen to a filtering crucible.

5.2 Leach the specimen with successive 10 ml. portions of the leaching solvent, allowing each successive portion to remain in contact with the specimen for approximately two minutes before applying suction.

5.3 Catch the filtrate in a clean beaker.

5.4 Continue the leaching until all soluble material is removed as indicated by an applicable qualitative test on a drop of filtrate coming through the crucible or achieving constant weight of the crucible and contents.

5.5 Aspirate the residue in the crucible until no odor of the leaching solvent is detectable.

5.6 Retain the residue and the filtrate for subsequent determinations.

Downloaded from http://www.everyspec.com

Downloaded from http://www.everyspec.com

METHOD 301.5
SAMPLE PREPARATION
(ORGANIC DESTRUCTION and SAMPLE DISSOLUTION)

1. SCOPE.

1.1 This method is used to bring an explosive into solution via destruction of the organic matter.

2. SPECIMEN.

2.1 The specimen shall consist of an accurately weighed portion of the explosive, suitable for the subsequent determinations.

105/106

3. APPARATUS.

3.1 Beaker, 400 ml.

3.2 Watch glass, ribbed.

3.3 Hot plate in well ventilated hood.

4. MATERIALS.

4.1 Nitric acid, 70 percent.

4.2 Sulfuric acid, concentrated.

5. PROCEDURE.

5.1 Traansfer the specimen to a beaker and cover the beaker with a watch glass.

5.2 Cover the specimen with water.

5.3 Add 10 ml. of nitric acid and warm to dissolve the specimen.

5.4 Add 10 ml. of sulfuric acid.

5.5 Evaporate on a hot plate until fumes of sulfur trioxide are evoIved.

5.6 Allow the beaker and contents to cool and then add 5 ml. of nitric acid,

5.7 Reheat the beaker and contents until the fumes of sulfur trioxide are evolved.

5.8 Repeat steps .5.6 and 5.7 until all organic matter is destroyed as indicated by the sulfuric acid solution in the beaker being colorless.

5.9 Remove the beaker from the hot plate and allow to cool.

5.10 Wash down the watch glass cover and side walls of the beaker, cautiously with a stream of approximately 25 ml. of distilled water.

5.11 Cover the beaker with the watch glass and retain the solution for subsequent determinations.

Downloaded from http://www.everyspec.com

Downloaded from http://www.everyspec.com

METHOD 301.6
SAMPLE PREPARATION (SOXHLET EXTRACTION)

1. SCOPE.

1.1 This method is used for extracting soluble ingredients from an explosive for use in subsequent determinations.

2. SPECIMEN.

2.1 The specimen shall consist of an accurately weighed portion of the explosive, suitable for the subsequent determinations.

3. APPARATUS.

103
108

3.1 Soxhlet or equivalent extractor.

3.2 Extraction thimble.

3.3 Steam or hot water bath.

4. MATERIALS.

4.1 Extraction solvent, such as ether, carbon tetrachloride or methylene chloride as specified in the applicable method or explosive specification.

5. PROCEDURE.

5.1 Transfer the specimen to an extraction thimble.

5.2 Place the thimble in a Soxhlet extraction apparatus.

5.3 Place 200 ml. of the extraction solvent in the flask of the extraction apparatus.

5.4 Place the extraction apparatus on a steam or hot water bath and adjust the temperature of the bath so that the solvent drips from the end of the condenser at the rate of 2 to 3 drops per second.

5.5 Continue the extraction for at least 16 hours.

5..6 Test for completeness of extraction in the following manner:

a. Allow the extraction to become almost full of the solvent.

b. Separate the extractor from the flask.

c. Draw one or two drops of the solvent from the extractor.

d. Transfer the drops to a clean spot plate.

e. Qualitatively test the drops to determine if they contain any of the solvent soluble material.

5.7 Continue the extraction until all solvent soluble material has been removed.

5.8 When extraction is complete dismantle the extractor and retain the extract and the residue for subsequent determinations.

Downloaded from http://www.everyspec.com

Downloaded from http://www.everyspec.com

METHOD 301.7
SAMPLE PREPARATION
(MULTIPLE SOLVENT EXTRACTION)

1. SCOPE.

1.1 This method is used for extracting solvent soluble ingredients from explosive mixtures for use in subsequent determination or to prevent them from interfering with subsequent determinations.

2. SPECIMEN.

2.1 The specimen shall consist of an accurately weighed portion of the explosive, suitable for the subsequent determinations.

109/110

3. APPARATUS.

3.1 Beaker.

3.2 Steam bath.

3.3 Filter stick or filtering crucible.

3.4 Suction filtering apparatus.

4. MATERIALS.

4.1 Extracting solvents as water, organic solvents or acid or alkali solution as specified in the applicable method or explosive specification.

5. PROCEDURE.

5.1 Transfer the specimen to a beaker.

5.2 Add approximately 25 ml. of solvent to the beaker.

5.3 Cover the beaker with a watch glass and place it on a steam bath.

5.4 Heat the beaker with occasional swirling until all soluble material is in solution.

5.5 Remove the beaker and contents from the steam bath and allow to cool to room temperature.

5.6 Remove all the solution by means of the filter stick and suction or by decanting the solution through a sintered glass crucible. Wash with the solvent.

5.7 Add approximately 25 ml. of a second solvent to the beaker and repeat steps 5.3 to 5.6.

5.8 Repeat the extraction with additional solvents until only the desired material remains in the beaker.

5.9 Retain the beaker and contents for subsequent determinations.

Downloaded from http://www.everyspec.com

Downloaded from http://www.everyspec.com

METHOD 301.8
SAMPLE PREPARATION (IGNITION)

1. SCOPE.

1.1 This method is used for obtaining an ash of an explosive for subsequent determinations.

2. SPECIMEN.

2.1 The specimen shall consist of approximately 5 gm. of the explosive, weighed to within 0.2 rng.

3. APPARATUS.

111/112

3.1 Crucible.

3.2 Muffle furnace.

3.3 Burner.

4. MATERIALS.

4.1 Paraffin wax, filtered.

5. PROCEDURE.

5.1 Transfer the specimen to a crucible.

5.2 Add approximately 10 gm. of the molten paraffin wax.

5.3 Heat gently with a burner to ignition and allow to burn off.

5.4 When the flame is extinguished, place the crucible and contents in a muffle furnace at a dull red heat until all residual carbon is burned off.

5.5 Remove the crucible and contents from the muffle furnace and allow to cool to room temperature.

5.6 Retain the crucible and contents for subsequent determinations.

Downloaded from http://www.everyspec.com

Downloaded from http://www.everyspec.com

METHOD 401.1
ANTIMONY SULFIDE (POTASSIUM BROMATE METHOD)

1. SCOPE.

1.1 This method is used to determine the antimony sulfide content of primers.

2. SPECIMEN.

2.1 The specimen shall consist of approximately 0.2 gm. of the explosive weighed to within 0.2 mg.

3. APPARATUS.

3.1 Filtering crucible—fine porosity sintered glass.

113/114

3.2 Erlenmeyer flask, 500 ml.

4. MATERIALS.

4.1 Sodium sulfite, reagent grade.

4.2 Bromine, reagent grade.

4.3 Hydrochloric acid, 38-percent.

4.4 Sulfuric acid, concentrated.

4.5 Potassium bromate, 0.05N standard solution as specified in Method 610.1.

4.6 Methyl orange indicator solution as specified in Method 704.1.

5. PROCEDURE.

5.1 Leach the specimen with a suitable solvent to remove explosive and interfering oxidizable material as specified in Method 301.4, retaining the residue in a fine porosity glass crucible.

5.2 Place the crucible and contents in a 500 ml. Erlenmeyer flask.

5.3 Add 5 ml. of bromine and add 75 ml. of concentrated hydrochloric acid.

5.4 Heat until all the antimony sulfide is in solution. Add additional bromine if necessary to insure an excess.

5.5 Boil until the color of the solution begins to fade, indicating most of the bromine has been boiled off.

5.6 Add slowly 10 ml. of concentrated sulfuric acid.

5.7 Continue boiling until the solution is pale yellow.

5.8 Cautiously add about one gram of sodium sulfite.

5.9 Wash down the neck and sides of the flask and boil the solution for about 10 to 15 minutes.

5.10 Dilute to approximately 350 ml. with boiling water.

5.11 Titrate the hot solution with 0.05N potassium bromate, using methyl orange as the indicator which should be preferably added near the end of the titration.

5.12 Calculate the percent of antimony sulfide as follows:

$$\text{Percent antimony sulfide} = \frac{8.49AN}{W}$$

where:

A = Potassium bromate solution required to titrate sample, ml.

N = Normality of the potassium bromate solution.

W = Weight of sample, gm.

Downloaded from http://www.everyspec.com

Downloaded from http://www.everyspec.com

METHOD 402.1
TOTAL LEAD (SULFATE METHOD)

1. SCOPE.

1.1 This method is used for determining the lead or lead compound content of initiators which do not contain any barium, strontium and calcium.

2. SPECIMEN.

2.1 The specimen shall consist of approximately 0.5 gm. of the explosive weighed to within 0.1 mg.

3. APPARATUS.

115'

3.1 Beaker, 100 ml.

3.2 Beaker, 250 ml.

3.3 Watch glass, ribbed.

3.4 Porcelain filtering crucible or equivalent.

3.5 Suction filtering apparatus.

3.6 Muffle furnace.

3.7 Hot plate (three settings) in well ventilated hood.

3.8 Steam bath.

3.9 Desiccator containing an indicating desiccant.

3.10 Filter paper No. 42 Whatman or equivalent.

4. MATERIALS.

4.1 Nitric acid, 3N solution.

4.2 Hydrogen peroxide, 30-percent solution.

4.3 Ethyl alcohol, 50-percent solution.

4.4 Ethyl alcohol, 95-percent (MIL-E-403A, grade 1).

5. PROCEDURE.

5.1 Place the specimen in a 100 ml. beaker.

5.2 Add 20 ml. of nitric acid solution and 0.5 ml. of hydrogen peroxide.

5.3 Heat the solution on a steam bath for one hour.

5.4 Remove from the steam bath and add 20 ml. of water.

5.5 Filter the solution through a filter paper. Wash the residue thoroughly with distilled water collecting both filtrate and washings in a 250 ml. beaker.

5.6 Add 8 ml. of sulfuric acid to the beaker and cover with a watch glass.

5.7 Evaporate the solution on a hot plate to fumes of sulfur trioxide three times, with subsequent washing of the cover and sides of the beaker after each fuming period.

5.8 Add 50 ml. of water and 50 ml. of 95-percent ethyl alcohol.

5.9 Allow the beaker and contents to stand at least one hour.

5.10 Filter the precipitate of Iead sulfate on a tared porcelain filtering crucible.

Downloaded from http://www.everyspec.com

5.11 Wash the crucible and residue thoroughly with 1:1 ethyl alcohol.

5.12 Aspirate the crucible for five minutes then dry for 15 to 30 minutes at 110°C.

5.13 Ignite the crucible in a muffle furnace for 15 minutes at 500° to 600°C.

5.14 Cool to room temperature in a desiccator and weigh.

5.15 Calculate the percentage lead or lead compound in the explosive as follows:

$$\text{Percent total lead} = \frac{68.32A}{W}$$

$$\text{Percent lead compound} = \frac{100AB}{nCW}$$

where:

A = Increase in weight of crucible (weight of lead sulfate precipitate), gm.

B = Molecular weight of specimen, gm.

n = Number of lead atoms in compound.

C = Molecular weight of lead sulfate.

W = Weight of specimen, gm.

116

Downloaded from http://www.everyspec.com

METHOD 402.2
TOTAL LEAD (CHROMATE METHOD)

1. SCOPE.

1.1 This method is used to determine the percentage of total lead content or the percent lead compound of explosives which do not contain any barium, strontium and calcium.

2. SPECIMEN.

2.1 The specimen shall consist of approximately 0.3 to 1.0 gm. of the explosives weighed to within 0.2 mg.

3. APPARATUS.

3.1 Beaker, 400-ml.

3.2 Hot plate or steam bath.

3.3 Filtering crucible, fine porosity fritted glass.

3.4 Oven.

3.5 Desiccator containing indicating desiccant.

3.6 Whatman No. 42 falter paper or equivalent.

4. MATERIALS.

4.1 Acetic acid, glacial (JAN-A-465).

4.2 Potassium bichromate, 10-percent solution.

4.3 Ammonium acetate, reagent grade.

4.4 Nitric acid, 70-percent.

4.5 Sulfuric acid, 50-percent solution.

5. PROCEDURE.

5.1 Prepare the specimen as specified in Method 301.5.

Caution: If the sample is lead azide, dissolve the specimen in 50 ml of a saturated solution of ammonium acetate, dilute with 200 ml of distilled water and heat to boiling. Add 10 ml of a 10-percent solution of bichromate and proceed according to paragraph 5.6.

5.2 Add 20 grams of ammonium acetate and one drop of methyl red to the solution. Neutralize with ammonium hydroxide until the solution just begins to turn yellow.

5.3 Heat to a gentle boil until all lead sulfate is dissolved. Filter the solution if necessary to remove any residue that does not dissolve on a No. 42 Whatman paper and wash the beaker and residue well with hot distilled water.

5.4 Heat the filtrate to boiling and add 10 ml. of 10 percent potassium bichromate solution while stirring.

5.5 Digest at just boiling until the precipitate appears bright orange, which may require digestion for 10 to 15 minutes.

5.6 Filter through a tared glass filtering crucible, and wash well with warm distilled water.

5.7 Dry in an oven at 110°C. ± 5°C. for one hour. Let cool in a desiccator to room temperature and weigh.

5.8 Calculate the lead content off the sample as follows:

Downloaded from http://www.everyspec.com

$$\text{Percent total lead} = \frac{64.11A}{W}$$

$$\text{Percent lead compound} = \frac{100AB}{nCW}$$

where:

A = increase in weight of crucible (weight of lead chromate precipitate), gm.

B = molecular weight of lead compound.

C = molecular weight of lead chromate.

W = weight of specimen.

n = number of lead atoms in compound.

115

Downloaded from http://www.everyspec.com

METHOD 403.1
AMMONIACAL NITROGEN (KJELDAHL METHOD)

1. SCOPE.

1.1 This method is used to determine the ammoniacal nitrogen content in explosives containing ammonium salts.

2. SPECIMEN.

2.1 The specimen shall consist of an accurately weighed portion of dry sample containing approximately 0.4 to 0.5 gm. of ammoniacal nitrogen, weighed to within 0.2 mg.

3. APPARATUS.

3.1 Assemble a 500 ml. Kjeldahl type flask for ammoniacal nitrogen distillation, with an inlet tube through which air, freed from moisture and ammonia by washing with concentrated sulfuric acid may be passed, and with an exit tube leading to a bottle containing a measured quantity of 0.lN sulfuric acid. Equip the sulfuric acid inlet bottle and the standard sulfuric acid exit bottle with perforated bulbs.'

3.2 Titration apparatus.

4. MATERIALS.

4.1 Sulfuric acid, 0.lN standard solution as specified in Method 612.1.

4.2 Sulfuric acid, concentrated.

4.3 Sodium carbonate, 5-percent solution.

4.4 Sodium hydroxide 0.lN standard solution as specified in Method 602.1.

4.5 Methyl red indicator solution as specified in Method 702.1.

5. PROCEDURE.

5.1 Transfer the specimen to the 500 ml. Kjeldahl type flask and assemble the flask for distillation, adding a measured amount of standard sulfuric acid to the exit bottle.

5.2 Add 20 ml. of water and 12 ml. of 5-percent sodium carbonate solution to the specimen, close the flask tightly, and set this in a boiling water bath.

5.3 Pass air through apparatus until the contents of the flask have been evaporated to dryness.

5.4 Detach the bottle containing standard sulfuric acid and titrate the excess acid with the standard sodium hydroxide using methyl red as the indicator.

5.5 Calculate the percent of ammoniacal nitrogen as follows:

$$\text{Percent ammoniacal nitrogen} = \frac{1.40\,(VN - vn)}{W}$$

where:

V = ml. of standard sulfuric acid in exit bottle.

N = normality of standard sulfuric acid.

v = ml. of standard sodium hydroxide used in titration.

n = normality of sodium hydroxide solution.

W = weight of sample.

Downloaded from http://www.everyspec.com

Downloaded from http://www.everyspec.com

METHOD 403.2
AMMONIACAL NITROGEN

1. SCOPE.

1.1 This method is used to determine the ammoniacal nitrogen content of explosives, containing ammonium salts.

2. SPECIMEN.

2.1 The specimen shall consist of approximately 1 gm. of the explosive, weighed to within 0.2 mg.

3. APPARATUS.

121/12

3.1 Flask, Erlenmeyer, 500 ml.

4. MATERIALS.

4.1 Formaldehyde solution, 20-percent solution.

4.2 Sodium hydroxide, 0.lN standard solution as specified in Method 602.1.

4.3 Phenolphthalein indicator solution as specified in Method 703.1.

5. PROCEDURE.

5.1 Place 20 ml. of the 20-percent formaldhyde solution in a flask.

5.2 Neutralize the formaldehyde with 0.lN sodium hydroxide solution using phenolphthalein indicator solution.

5.3 Dissolve or extract the specimen with 150 ml. of distilled water as specified in 301.2 or 301.3 and add the resulting aqueous solution to the flask.

5.4 Heat the solution in the flask to 60°C.

5.5 Titrate with 0.lN sodium hydroxide using phenolphthalein indicator solution.

5.6 Calculate the percent ammoniacal nitrogen as follows:

$$\text{Percent ammoniacal nitrogen} = \frac{1.4VN}{W}$$

where:

V = volume of sodium hydroxide used, ml.

N = normality of sodium hydroxide used.

W = weight of sample, gm.

Downloaded from http://www.everyspec.com

Downloaded from http://www.everyspec.com

METHOD 404.1
BARIUM SALTS (CHROMATE METHOD)

1. SCOPE.

1.1 This method is used to determine the barium compound content of exploives and. initiators in the presence of strontium and calcium.

2. SPECIMEN.

2.1 The specimen shall consist of approximately 5 gm. of the explosive weighed to within 0.2 mg.

3. APPARATUS.

123

3.1 Hot plate.

3.2 Gooch crucible or equivalent.

3.3 Volumetric flask, 500 ml.

3.4 Beaker, 400-ml.

3.5 Pipette, 100-ml.

4. MATERIALS.

4.1 Ammonium acetate, 40 percent solution.

4.2 Potassium bichromate, (sulfate free), 10 percent solution.

4.3 Wash solution Potassium bichromate.

4.4 Hydrochloric acid.

4.5 UREA.

5. PROCEDURE.

5.1 Leach or extract the specimen with suitable solvent to dissolve the barium salts as described in Method 301.4 or 301.3 retaining the filtrate.

5.2 Transfer the filtrate to a 500 ml. volumetric flask and dilute to the mark with distilled water.

5.3 Pipette a 100 ml. aliquot of the solution into a 400 ml. beaker and dilute to 250 ml. with distilled water.

Caution: The aliquot should not contain more than 0.4 gm. of barium. A smaller aliquot should be taken, if necessary, so as not to exceed this maximum.

5.4 Add 7 ml. of hydrochloric and stir to dissolve.

5.5 Heat to about 80°C. and add with stirring 10 ml. of ammonium acetate solution, 25 ml. of potassium bichromate solution, and 10 gm. of urea.

5.6 Cover with a watch glass, heat to boiling, boil moderately until a precipitate settles on the bottom of the beaker, and then continue boiling moderately for 60 to 65 minutes.

5.7 Midway during the 60 to 65 minute boiling period, wash down the cover lid with water and bring the volume to 225 to 250 ml. by adding hot water.

5.8 Filter through a tared sintered glass crucible of medium porosity, transfer the precipitate to the crucible with potassium bichromate wash solution.

5.9 Wash the crucible and contents four times with water.

5.10 Dry the barium chromate precipitate for one hour in an oven at 120° ± 5°C.

Downloaded from http://www.everyspec.com

5.11 Cool in a desiccator and weigh. Calculate the increase in weight to percent barium nitrate as follows:

$$\text{Percent barium compound} = \frac{100AB}{nCW}$$

where:

A = weight of barium chromate precipitate, gm.

B = molecular weight of the barium compound.

C = molecular weight of barium chromate.

W = weight of specimen.

n = number of barium atoms in compound.

Downloaded from http://www.everyspec.com

METHOD 405.1
BARIUM SALTS (SULFATE METHOD)

1. SCOPE.

1.1 This method is used to determine the percent of barium compound in an explosive in the absence of strontium, calcium, lead and silica.

2. SPECIMEN.

2.1 The specimen shall consist of approximately 5 gm. of the explosive, weighed to within 0.2 mg.

3. APPARATUS.

3.1 Gooch crucible or equivalent.

3.2 Hot plate.

3.3 Volumetric flask, 500 ml.

3.4 Beaker, 250-ml.

4. MATERIALS.

4.1 Hydrochloric acid solution, 10-percent solution.

4.2 Sulfuric acid, concentrated.

4.3 Hydrochloric acid, 38-percent solution.

5. PROCEDURE.

5.1 Transfer the specimen to a 260 ml. beaker.

5.2 Add sufficient diluted hydrochloric acid to dissolve the barium salt.

5.3 Filter the solution through No. 42 Whatman paper, and wash the residue with approximately 150 ml. of water.

5.4 Transfer the filtrate and the washings to a 500 ml. volumetric flask and dilute to the mark with distilled water.

5.5 Transfer a 50 ml. aliquot of the solution to a 250 ml. beaker.

Caution: The aliquot should contain not more than 0.15 gm of barium. A smaller aliquot should be taken, if necessary, so as not to exceed this maximum.

5.6 Add 5 ml. of concentrated sulfuric acid, and evaporate until fumes of sulfur trioxide are evolved.

5.7 Cool the liquid, dilute with 100 ml. of distilled water, add 2 ml. of concentrated hydrochloric acid, and heat to boiling.

5.8 Allow the hot solution to stand on a steam bath or hot plate until the precipitate of barium sulfate has settled, and filter through a previously ignited and tared Gooch crucible.

5.9 Wash the precipitate ten times with 25 ml. portions of hot water, dry in an oven at 100° ± 5°C., for 1 hour ignite and in a muffle furnace at approximately 750°C. for 30 minutes, cool in a desiccator and weigh.

5.10 Calculate the percentage of barium salt in the sample as follows:

$$\text{Percent barium compound} = \frac{100AB}{nCW}$$

where:

A = weight of precipitate, in gm.
B = molecular weight of the barium compound.
C = molecular weight of barium sulfate.
W = weight of the sample, gm.
n = number of barium atoms in the compound.

Downloaded from http://www.everyspec.com

Downloaded from http://www.everyspec.com

METHOD 406.1
INORGANIC CHLORIDES

1. SCOPE.

1.1 This method is used to determine the chloride content as an impurity in explosives by precipitating the water soluble chlorides as silver chloride. Sulfides, bromides, iodides, thiocyanates and thiosulfates interfere.

2. SPECIMEN.

2.1 The specimen shall consist of an accurately weighed portion of the explosive containing approximately from 0.0015 to 0.016 gm. of chloride.

127

3. APPARATUS.

3.1 Beaker, 400-ml., and watch glass cover.

3.2 Buchner funnel, 5 cm.

3.3 Watch glass.

3.4 Gooch crucible with asbestos mat or equivalent.

3.5 Oven.

3.6 Desiccator containing indicating desiccant.

4. MATERIALS.

4.1 Nitric acid, 70-percent.

4.2 Nitric acid, l-percent solution.

4.3 Silver nitrate, 5-percent solution.

4.4 Silver nitrate, 0.005-percent solution.

5. PROCEDURE.

5.1 Transfer the specimen to a 400 ml. beaker and add 300 ml. of distilled water.

5.2 While stirring mechanically, heat the mixture on a hot plate until the boiling point is reached.

5.3 Cool to room temperature and filter the solution through a Buchner funnel transferring any insoluble matter to the filter.

5.4 Wash the filter and residue with several 25 ml. portions of water (20° to 25 °C,).

5.5 Transfer the filtrate and washings to a 400 ml. beaker and add 5 ml. of concentrated nitric acid.

5.6 Add slowly, with constant stirring, sufficient 5-percent silver nitrate solution to completely precipitate the chlorides present.

5.7 Heat the solution to 60° ± 5°C., allow the precipitate to settle.

5.8 Add a few drops of silver nitrate solution. If additional precipitate appears, repeat the heating, settling, and addition of silver nitrate.

5.9 When precipitation is complete, cover the beaker and allow to stand in a dark place for a few hours or overnight.

5.10 Decant the supernatant solution through a tared Gooch crucible, and wash the precipitate by recantation with a solution containing 0.005-percent of silver nitrate.

5.11 Transfer the precipitate to the crucible and wash it with a 1-percent solution of nitric acid.

Downloaded from http://www.everyspec.com

5.12 Dry the crucible and contents first at 100° to 105°C. for 1 hour and then at 130° to 135°C., for 3 hours or until constant weight, cool in a desiccator, and weigh.

5.13 Calculate the increase in weight to percentage chloride in the sample as follows:

$$\text{Percent chloride} = \frac{24.7A}{W}$$

where:

A = wt. of silver chloride precipitate, gm.

W = weight of specimen, gm.

128

Downloaded from http://www.everyspec.com

METHOD 407.1
LEAD AZIDE (EUDIOMETER METHOD)

1. SCOPE.

1.1 This method is used to determine the lead azide content of primers or the percent purity by measuring the nitrogen gas evolved when the lead azide is treated with eerie ammonium nitrate.

2. SPECIMEN.

2.1 The specimen shall consist of an accurately weighed portion of the explosive containing 1.70 gm. of lead azide weighed to within 0.2 mg.

129

3. APPARATUS.

3.1 Apparatus (fig. 1) consisting of the following:

a. Reaction Flask. Erlenmeyer flask fitted with a 2 hole rubber stopper.

b. Buret, 25 or 50 ml. capacity. The tip is inserted through one hole of the rubber stopper.

c. U-tube. A drying tube containing ascarite which is used to absorb any evolved carbon dioxide. The U-tube is connected to the reaction flask through the second hold of the rubber stopper.

d. Stopcock, 3 way "T" type. This is inserted between the drying tube and the gas buret so that the reaction flask can be exposed to atmospheric pressure.

e. Gas Buret, calibrated from 450 ml. to 600 ml. This is connected to a water leveling bulb filled with water and saturated with the gas that is to be evolved. The buret is water jacketed to achieve accurate and rapid temperature control.

f. Circulating pump. A water pump that is used to circulate the water through the water jacket.

g. Reservoir. A pail of water in which the reaction flask is immersed in order to maintain it at the same temperature as the gas buret.

4. MATERIALS.

4.1 Ceric ammonium nitrate, 15-percent solution.

5. PROCEDURE.

5.1 Transfer the specimen to the reaction flask.

5.2 Add 100 to 200 ml. of distilled water saturated with the gas that is to be evolved.

5.3 Connect the reaction flask to the apparatus. Open the 3-way "T" stopcock so that the flask and the gas buret is exposed to atmospheric pressure. Adjust the level of the liquid in the gas burette so that the meniscus of the water is at the O ml. mark with the aid of the leveling bulb.

5.4 Turn the 3-way "T" stopcock to the position that will only allow gas to flow from the Erlenmeyer flask (Reaction Flask) to the gas buret.

5.5 Note and record the temperature and pressure.

5.6 Lower the leveling bulb and add 25 ml. of eerie ammonium nitrate solution from the buret.

5.7 Agitate the reaction flask occasionally until the reaction is completed. Consider the reaction complete when the volume of gen-

Downloaded from http://www.everyspec.com

erated gas remains within 1 ml. for a period of 15 minutes.

5.8 When the reaction is complete, adjust the level in the gas buret to that of the water leveling bulb and read the volume of gas in the gas buret.

5.9 If the evolved gas is less than is measurable by the gas buret add a known volume of water through the reactant buret until a readable volume is reached on the gas buret.

5.10 The determination must be started and finished at the same temperature (approximately 25°C.). Allow the temperature of the system to adjust itself to within 0.l°C. of its temperature at the beginning of the determination.

5.11 Calculation.

$$\text{Percent Lead Azide} = \frac{0.1558\ (A—B)\ (C—D)}{(273 + T)\ w}$$

where:

A = volume of gas in gas buret.

B = volume of reactant and water added from the reactant buret.

C = atmospheric pressure, mm. of mercury.

D = vapor pressure of water at temperature T, mm. of mercury.

W = weight of dry sample, gm.

T = temperature of the system at equilibrium, °C.

130

Downloaded from http://www.everyspec.com

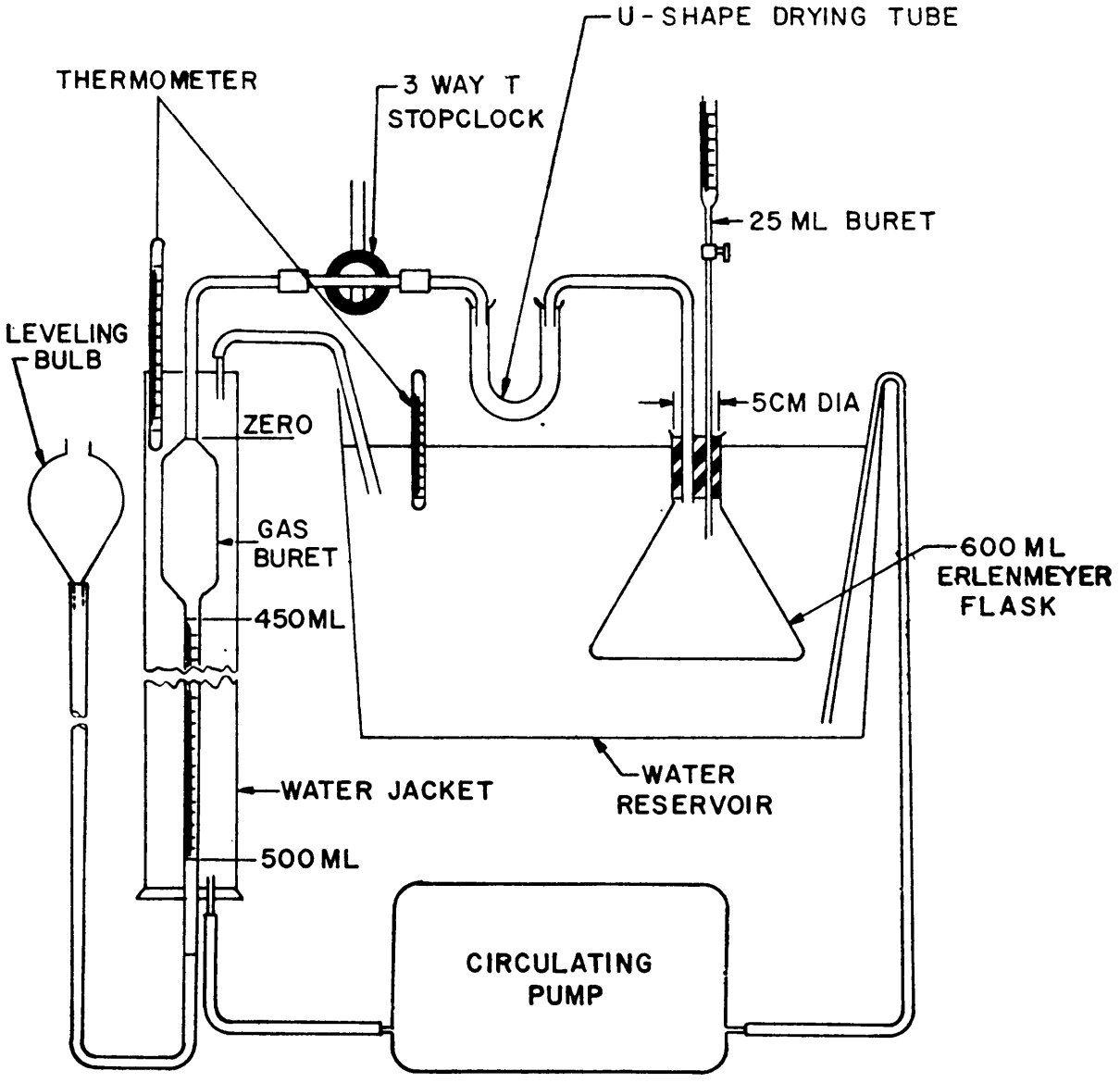

FIGURE 1. *Equipment assembly.*

Downloaded from http://www.everyspec.com

Downloaded from http://www.everyspec.com

METHOD 408.1
LEAD STYPHNATE, NORMAL
(SPECTROPHOTOMETRIC METHOD)

1. SCOPE.

1.1 This method is used to determine the lead styphnate, normal, content in explosive mixtures or percent purity.

2. SPECIMEN.

2.1 The specimen shall consist of an accurately weighed portion of the explosive, weighed to within 0.2 mg. containing 0.23 to 0.26 gm. of lead styphnate.

133/134

3. APPARATUS.

3.1 Spectrophotometer.

3.2 Beaker, 150-ml.

3.3 Volumetric flask, 250-ml.

3.4 Volumetric flask, 1000-ml.

3.5 Pipette, 25-ml.

3.6 Crucible, fine porosity.

4. MATERIALS.

4.1 Ammonium acetate, 20 percent solution.

5. PROCEDURE.

5.1 Extract the specimen with 50 ml. of 20 percent ammonium acetate solution and wash with distilled water until the filtrate is colorless, retaining the filtrate and washing as specified in Method 301.3.

5.2 Transfer the filtrate and washings to a 250 ml. volumetric flask and dilute to the mark with water and thoroughly mix.

5.3 Pipette a 25 ml. aliquot into a 1000 ml. volumetric flask, dilute to mark with water and thoroughly mix.

5.4 Transfer a portion of this solution to a corex glass cell having a width of approximately 1 cm. and determine its optical density at a wave length of 410 millimicrons by using a quartz ultra violet spectrophotometer. Use as reference a similar cell containing ammonium acetate solution of the same concentration as the sample solution.

5.5 Correct the optical density obtained for the difference between the reference cell and the sample cell as follows:

a. Fill both cells with ammonium acetate solution.

b. Measure the optical density of the sample cell at a wave length of 410 millimicrons.

5.6 Calculate the percentage lead styphnate as follows:

$$\text{Percent lead styphnate, normal} = \frac{29.41\ (A-B)}{WD}$$

where:

A = optical density of lead styphnate solution.

B = optical density of sample cell containing ammonium acetate solution.

W = weight of original sample, gm.

D = width of corex cell containing sample solution, cm.

Downloaded from http://www.everyspec.com

Downloaded from http://www.everyspec.com

METHOD 409.1
NITRO-NITROGEN CONTENT
(TITANOUS CHLORIDE METHOD)

1. SCOPE.

1.1 This method is used to determine the nitro-nitrogen content of explosive compounds.

2. SPECIMEN.

2.1 The specimen shall consist of an accurately weighed portion of the dried explosive containing approximately 0.15 gm. nitro-nitrogen weighed to within 0.2 mg.

3. APPARATUS.

3.1 Storage system (fig. 1) consisting essentially of:

a. Storage bottle, amber colored pyrex glass (or pyrex glass painted black), 18-liter.

b. Kipp generator.

c. Buret, 50-ml.

3.2 Titration flask (fig. 2).

3.3 Reflux condenser.

3.4 Hot plate, three heat control.

3.5 Volumetric flask, 250-ml.

4. MATERIALS.

4.1 Titanous chloride. 0.2N standard solution as specified in Method 605.1.

4.2 Ferric ammonium sulfate. 0.15N standard solution as specified in Method 603.1.

4.3 Ammonium thiocyanate. 20 percent solution (filter solution if it has a slight red color).

4.4 Hydrochloride acid. 15 percent solution.

4.5 Inert gas (carbon dioxide).

5. PROCEDURE.

5.1 Transfer the specimen to a 250 ml. volumetric flask. Add 100 ml. of glacial acid, and ‘heat on a steam bath to dissolve the specimen. Allow to cool to room temperature and add sufficient glacial acetic acid to bring the level of the solution in the flask to the mark.

5.2 Displace the air in the titration flask by passing in a current of carbon dioxide for 5 minutes. With the aid of a pipette, transfer 25 ml. of the acetic acid solution of the specimen to the titration flask.

5.3 Add approximately 25 ml. of 15 percent hydrochloric acid solution and an accurately measured portion of approximately 45-50 ml. of 0.2N titanous chloride solution to the titrating flask.

Note. At least a 25-percent excess of reagent is necessary to force the reduction to completion. Determine the amount of reagent required as follows:

$$X + \frac{S.W.}{M.W.} = \text{Volume of } TiCl_3 \text{ required}$$

$$\frac{\quad}{n \times 6000} \; N$$

where:

S.W. = sample weight, gm.

M.W. = molecular weight of material, gm.

n = number of NO_2 groups in sample material

Downloaded from http://www.everyspec.com

N = normality of $TiC1_3$ solution

X = a minimum 25-percent

5.4 Place a few glass beads in the titrating flask to prevent bumping. Connect the flask to a reflux condenser and boil gently for 20 to 30 minutes on a hot plate.

5.5 Increase the current of carbon dioxide, then cautiously immerse the flask in a cold water bath, keeping the index finger over the top of the condenser until the hot vapors are condensed.

5.6 After cooling the flask and contents to room temperature, disconnect the condenser and insert a one hole rubber stopper which contains a short piece of glass tubing.

5.7 Insert the top of the buret into the glass tubing, adding 5 ml. of 20 percent ammonium thiocyanate solution near the end point, and titrate the cooled solution with 0.15N ferric ammonium sulfate solution to the first permanent red color.

5.8 Run a blank determination in exactly the same manner using exactly the same quantity of titanous chloride solution.

5.9 Determine the percentage of nitro nitrogen as follows:

$$\text{Percent nitro-nitrogen} = \frac{0.233(V-AF)\ (N)}{W}$$

where:

V = volume of titanous chloride added.

N = normality of titanous chloride solution.

A = volume of ferric ammonium sulfate solution.

F = factor for converting the volume of ferric ammonium sulfate solution to an equivalent volume of titanous chloride solution.

W = weight of sample represented by aliquot taken.

5.10 Determine the percent purity as follows : 136

Substitute in the formula for determining the percent nitro-nitrogen (5.9) the equivalence factor of the material being tested for that of nitrogen, calculated as follows:

$$\text{Equivalence factor} = \frac{M.W.\ 100}{6n\ 1000}$$

where:

M.W. = molecular weight of material being tested, gm.

n = number of nitro groups.

Downloaded from http://www.everyspec.com

137
138

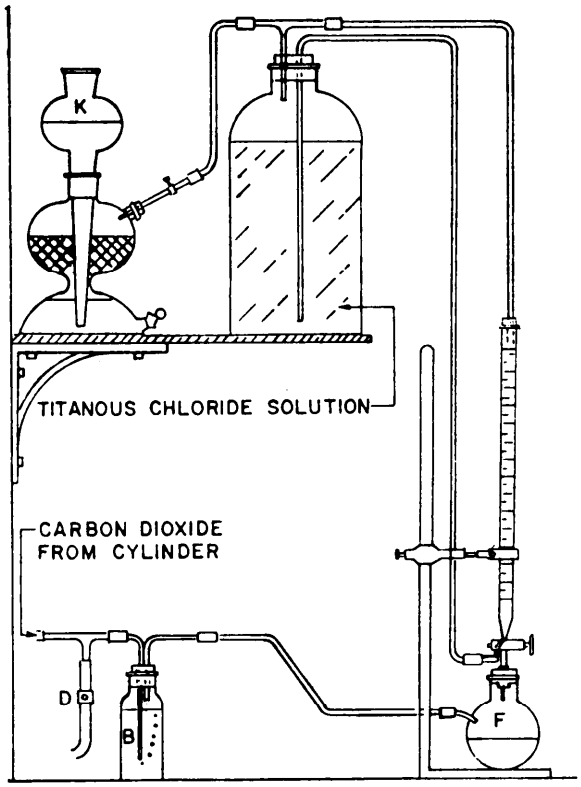

FIGURE 1. *Apparatus for storing and using titarous chloride solution.*

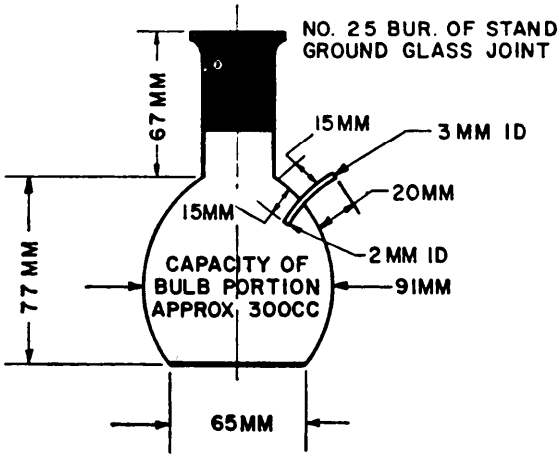

ALL DIMENSIONS ARE APPROXIMATE

FIGURE 2. *Special titration flask.*

Downloaded from http://www.everyspec.com

Downloaded from http://www.everyspec.com

METHOD 410.1
MERCURY FULMINATE

1. SCOPE.

1.1 This method is used to determine the mercury fulminate content in primers or the percent purity.

2. SPECIMEN.

2.1 The specimen shall consist of an accurately weighed portion of the sample containing, preferably, 0.3 gm. of mercury fulminate weighed to within 0.2 mg.

3. APPARATUS.

139/140

3.1 Beaker, 250 ml.

3.2 Timer.

4. MATERIALS.

4.1 Sodium thiosulfate solution, 20-percent solution freshly prepared.

4.2 Hydrochloric acid, 0.lN standard solution as specified in Method 601.1.

4.3 Methyl red indicator solution as specified in Method 702.1.

5. PROCEDURE.

5.1 Transfer a specimen to a 250 ml. beaker.

5.2 Add quickly 30 ml. of freshly prepared sodium thiosulfate solution.

5.3 Shake the mixture exactly 1 minute.

5.4 Titrate immediately with 0.lN hydrochloric acid solution using 3 drops of methyl red indicator. Add most of the hydrochloric acid solution required immediately and complete the titration in not more than 1 minute.

5.5 Run a blank determination using the same quantity of sodium thiosulfate solution.

5.6 Calculations.

$$\text{Percent mercury fulminate} = \frac{7.116\ (V-v)N}{W}$$

where:

V = hydrochloric acid required for titration, ml.

v = hydrochloric acid required for blank, ml.

N = Normality of hydrochloric acid.

Downloaded from http://www.everyspec.com

Downloaded from http://www.everyspec.com

METHOD 411.1
SULFATES

1. SCOPE.

1.1 This method is used to determine the sulfate content as an impurity in explosives.

2. SPECIMEN.

2.1 The specimen shall consist of approximately 5 gm. of the explosive weighed to within 0.2 mg.

3. APPARATUS.

141/142

3.1 Oven.

3.2 Muffle furnace.

3.3 Desiccator containing an indicating desiccant.

3.4 Gooch crucible, prepared with asbestos filtering mat and ignited at 900°C., or equivalent

3.5 Hot plate.

4. MATERIALS.

4.1 Hydrochloric acid, 38 percent.

4.2 Barium chloride solution, 10 percent solution.

5. PROCEDURE.

5.1 Dissolve the specimen in water as specified in Method 301.2 or dissolve and extract the specimen as specified in Method 301.1, filtering to remove any undissolved material.

5.2 Bring the solution to a boil on a hot plate or steam bath.

5.3 Add 1 ml. of hydrochloric acid and 1 ml. of 10 percent barium chloride solution.

5.4 Again bring the solution a boil and boil for 5 minutes.

5.5 Remove the beaker from the hot plate or steam bath and allow to stand for at least 10 hours. Test for complete precipitation by adding one more ml. of barium chloride solution.

5.6 After standing, again bring to boil and filter the hot solution, collecting the precipitate in a tared filtering crucible.

5.7 Dry the crucible and contents in an oven at 100° ± 2°C., and then place in a muffle furnace at a temperature of 600 °-800°C. for 1 hour. Cool in a desiccator and weigh.

5.8 Calculate the sulfate content to percentage using the following formulas as follows:

$$\text{Percent sulfates} = \frac{34.3A}{W}$$

Percent sulfates (as sulfuric acid),

$$\frac{42.018A}{W}$$

where:

A = weight of precipitate, gm.

W = weight of sample, gm.

Downloaded from http://www.everyspec.com

Downloaded from http://www.everyspec.com

METHOD 413.1
TRINITROTOLUENE

1. SCOPE.

1.1 This method is used for determining the trinitrotoluene content of explosives mixtures, such as composition B, composition A3 and A4

2. SPECIMEN.

2.1 The specimen shall consist of approximately 1-2 gm. of the explosive weighed to within 0.2 mg.

143/144

3. APPARATUS.

3.1 The apparatus used in this method is identical with that used in Method 409.1.

4. MATERIALS.

4.1 The materials used in this method are identical with those used in Method 409.1.

5. PROCEDURE.

5.1 Extract the specimen with a suitable solvent such as carbon tetrachloride or benzene as described in Method 301.3 retaining the filtrate. Evaporate the filtrate under a stream of dry air.

Note. The residue should contain no other nitro or nitroso compound other than TNT.

5.2 Dissolve the residue remaining from the evaporated filtrate in glacial acetic acid and transfer quantitatively to a 250 ml. volumetric flask. Dilute to mark with glacial acetic acid.

5.3 Follow the procedure described in Method 409.1 starting with paragraph 5.2, for the determination of nitro-nitrogen in the explosive.

5.4 Calculate the percentage of trinitrotoluene in the explosive as follows:

$$\text{Percent trinitrotoluene} = \frac{1.262\ (A - B)N}{W}$$

where:

A = ferric ammonium sulfate solution required for the blank, ml.

B = ferric ammonium sulfate solution required for the explosive extract solution, ml.

N = normality of ferric ammonium sulfate solution.

W = weight of the specimen represented by the aliquot taken, corrected for total volatiles, gm.

Downloaded from http://www.everyspec.com

Downloaded from http://www.everyspec.com

METHOD 413.2
TRINITROTOLUENE (IN TETRYTOL)

1. SCOPE.

1.1 This method is used to determine the trinitrotoluene content in tetrytol.

2. SPECIMEN.

2.1 The specimen shall consist of approximately 0.35 gm. of the explosive, weighed to within 0.2 mg.

3. APPARATUS.

3.1 Volumetric flask, 100 ml.

3.2 Ice bath.

3.3 Pipette, 100 ml.

3.4 Rubber tubing.

3.5 Cotton filter plug.

3.6 Erlenmeyer flask.

3.7 Oven.

4. MATERIALS.

4.1 Carbon tetrachloride (O-C-141).

5. PROCEDURE.

5.1 Transfer the specimen to a previously weighed 100 ml. volumetric flask having a short neck and ground glass stopper.

5.2 Add approximately 100 ml. of carbon tetrachloride to the flask and heat the mixture to boiling in order to insure the solution of all TNT present.

5.3 Stopper the flask, allow the flask and contents to cool to room temperature and weigh.

5.4 Immerse the bulb of the flask in an ice bath for not less than 4 hours, agitating the contents every 15 minutes or half hour.

5.5 At the end of this time take a sample of the supernatant liquid, which should be between 0.0° and 0.5°C. in the following manner:

a. Attach a 100 ml. pipette to a short piece of rubber tubing containing a cotton filter plug.

b. Insert the end of the tubing into the supernatant liquid, quickly draw up as large a portion of the liquid as possible into the assembly and immediately transfer this to a dried and weighed Erlenmeyer flask having a tight fitting stopper.

5.6 Allow the flask and contents to warm up to room temperature, weigh, evaporate the carbon tetrachloride by means of a current of dry air and dry the residue at 60°C. for two hours and weigh.

5.7 Calculate the TNT content of the sample as follows:

$$\text{Percentage of TNT} = \frac{Wa(100Wn - 0.0073Wc)}{Wc \times Wt.}$$

where:

Wa = total weight of carbon tetrachloride used.

Wc = weight of carbon tetrachloride in portion of supernatant liquid taken.

Wt = weight of the tetrytol sample taken for analysis.

Wn = weight of residue from portion of supernatant liquid taken.

Downloaded from http://www.everyspec.com

Downloaded from http://www.everyspec.com

METHOD 414.1
NITROGEN CONTENT (NITROMETER METHOD)

1. SCOPE.

1.1 This method is used to determine the nitrogen content of explosive nitrates (such as PETN) by measuring the nitric oxide Liberated when they are reacted with sulfuric acid in the presence of mercury.

2. SPECIMEN.

2.1 The specimen shall consist of an accurately weighed portion of the sample which shall contain approximately, but not more than 0.14 gm. of nitrogen, crushed to pass through a No. 100 U.S. Standard Sieve and dried by a suitable method.

147

3. APPARATUS.

3.1 An apparatus such as the duPont Nitrometer or equivalent is used. This apparatus is available complete with stand and connecting tubing at most laboratory supply houses. A diagram of the duPont Nitrometer, in which each part is designated by a number, is shown in figure 1.

3.2 Leveling glass. A piece of 10 mm. glass tubing bent in the shape of a square cornered U-tube, filled with alcohol coIored with methyl red indicator so that the upright arms are half full.

3.3 Set up the apparatus as follows:

a. Clean the glass parts of the nitrometer with potassium bichromate-sulfuric acid cleaning solution followed by thorough washing with distilled water. After allowing to drain, dry the parts of 2 to 3 hours by means of a stream of air which has been drawn through a sulfuric acid or caustic potash drying train.

b. Use new rubber tubing which does not contain talc in the bore. Roll the tubing under pressure between boards to loosen any particles of dirt which may cling to the interior surface. Fill the tubing with a 10-percent solution and pass water through the tubing for at least one hour. Drain off the water and remove traces by pouring through redistilled acetone or 95-percent ethyl alcohol. Dry the tubing thoroughly by passing through air which has been drawn through a sulfuric acid or caustic potash drying train.

c. Assemble the nitrometer as shown in figure 1 and fill the various parts with mercury with the exception of the reservoir bulbs. Place 25 ml. of the 94.5 ± 0.5-percent sulfuric acid in the cup of the reaction bulb, and draw the acid into the reaction bulb to nearly the level of the lower shoulder by lowering the mercury reservoir and opening both stopcocks. Close both stopcocks and shake the bulb frequently in the course of 12 hours in order to completely dry the air. Apply a small flame and draw out the tip of the compensating tube so that a constriction of about 2 mm. diameter is formed. Fill both the compensating and measuring tubes to overflowing with mercury by raising the leveling bulb.

d. Connect the reaction bulb to the capillary tip of the compensating tube by means of a short piece of clean, dry, rubber tubing provided with a screw clamp. Transfer sufficient dry air to fill the compensating tube to a level about 14 inches below the bulb. (Care should be exercised so that no acid gets into the compensating tube.) After the dry air is drawn into the compensating tube, adjust the columns of mercury in the compensating and measuring tubes to the same level, at about 14 inches below the bulb on the compensating tube, and under very slight pressure (not more than 2 or 3 mm.

Downloaded from http://www.everyspec.com

Hg.). Allow the screw clamp on the small rubber tube, still connected to the reaction bulb, and the stopcocks on the reaction bulb and measuring tube to remain open. With a small flame, seal off the capillary at the point where it was previously drawn out and then disconnect the reaction bulb and compensating tube.

4. MATERIALS.

4.1 Potassium nitrate—ACS grade, recrystallized three times from 95-percent alcohol and ground to pass through a No. 100 standard U. S. sieve. It should then be dried at 135 to 150°C. for 2 to 3 hours.

4.2 Sulfuric acid 99.5 ± 0.5 percent, nitrogen free.

4.3 Mercury, instrument grade.

5. PROCEDURE.

5.1 Standardization of the nitrometer as follows :

a. Weigh a portion of exactly 1 gram (gin.) of potassium nitrate into a small weighed bottle.

b. Transfer the contents of the weighing bottle into the cup of the reaction bulb.

Warning: At this point the operator should put on a face mask.

c. Rinse the weighing bottle with about 5 ml. of sulfuric acid previously cooled to 50°C. Transfer this washing to the cup of the reaction bulb.

d. Open the lower stopcock of the reaction bulb and lower the mercury reservoir until the level falls nearly to the lower shoulder of the reaction bulb. Open the upper stopcock and draw the contents of the cup into the bulb.

e. Repeat the rinsing of the weighing bottle and the cup with 4 to 5 additional portions of cooled acid until a total of 25 ml. is used. Draw each portion into the reaction bulb through the upper stopcock.

f. Force out any air drawn into the bulb by raising the mercury reservoir and opening the upper stopcock.

g. Again lower the reservoir until the mercury level in the reaction bulb falls to the lower shoulder.

h. Close the lower stopcock and shake the bulb vigorously for 3 minutes. Replace the bulb on the rack, open the lower stopcock, and allow the tube to stand for 5 minutes. Keep the mercury in the reaction bulb and reservoir, level with the lower shoulder of the former. Close the lower stopcock, and shake the reaction bulb for 3 additional minutes.

i. Adjust the height of the measuring tube on the rack so that its capillary exactly meets the top capillary of the reaction bulb. 148

j. Make an air tight connection between the two capillaries with a piece of rubber tubing. Transfer the gas to the measuring tube, close the stopcock and disconnect the reaction bulb.

k. Adjust the levels of the mercury in the measuring and compensating tubes to approximately the same height and allow the gas to stand for approximately 20 minutes to permit equalization of the temperature.

1. With a U-tube leveling device make careful adjustments so that the mercury in both tubes is at the same level, and the meniscus in the reading tube is at 13.865 (the percentage of nitrogen in potassium nitrate).

m. Make a mark on the compensating tube to show the volume occupied by the air equivalent to the volume of nitric oxide gas liberated from exactly 1 gm. of potassium nitrate. (This mark may be made on a strip of gummed paper attached to the compensating tube.)

Downloaded from http://www.everyspec.com

5.2 Determine the nitrogen content in the specimen as follows:

a. Transfer the specimen from the weighing bottle to the cup of the reaction bulb.

b. Measure into a small graduate, 25 ml. of sulfuric acid previously cooled to approximately 5°C. Use a 5 ml. portion of the acid to rinse first the weighing bottle and then the nitrometer cup.

c. Lower the mercury reservoir sufficiently to reduce the pressure in the reaction bulb. Put on a face mask, open the upper stopcock and then open the lower stopcock sufficiently to draw the acid into the reaction bulb.

d. Make successive 5 ml. rinsings with the rest of the sulfuric acid being careful not to allow any air to enter the reaction bulb. After the last rinsing close the upper stopcock, leaving the lower one open, and lower the mercury reservoir just enough to maintain a slightly reduced pressure in the reaction bulb.

149

e. Shake the bulb gently until most of the gas has been generated. Lower the mercury reservoir until the level of the mercury in the reaction bulb is at the lower shoulder, then close the lower stopcock and shake vigorously for 3 minutes.

f. Replace the bulb on the rack, open the lower stopcock, and adjust the mercury reservoir until the mercury in the reaction bulb is at approximately the same height as the mercury in the reservoir. This will bring the pressure inside the reaction bulb to approximately one atmosphere. Close the lower stopcock and shake the bulb vigorously for an additional 3 minutes.

g. By means of a short piece of rubber tubing connect the reaction bulb to the measuring tube and transfer the gas to the measuring tube by raising the mercury reservoir.

h. When the transfer is completed, close the stopcock on the measuring tube and disconnect it from the reaction bulb. Adjust the levels of the mercury in the compensating and measuring tubes to approximately the same height.

i. Allow 20 minutes to permit equalization of the temperature of the gas in the two tubes. Keep the mercury level in the compensating tube at the standard volume mark and equalize the level in the measuring tube with the aid of a U-tube leveling device.

j. Calculate the percent nitrogen as follows :

$$\text{Percent nitrogen} = \frac{R}{W}$$

where:

R = reading of measuring tube.

W = weight of sample, in gm.

Downloaded from http://www.everyspec.com

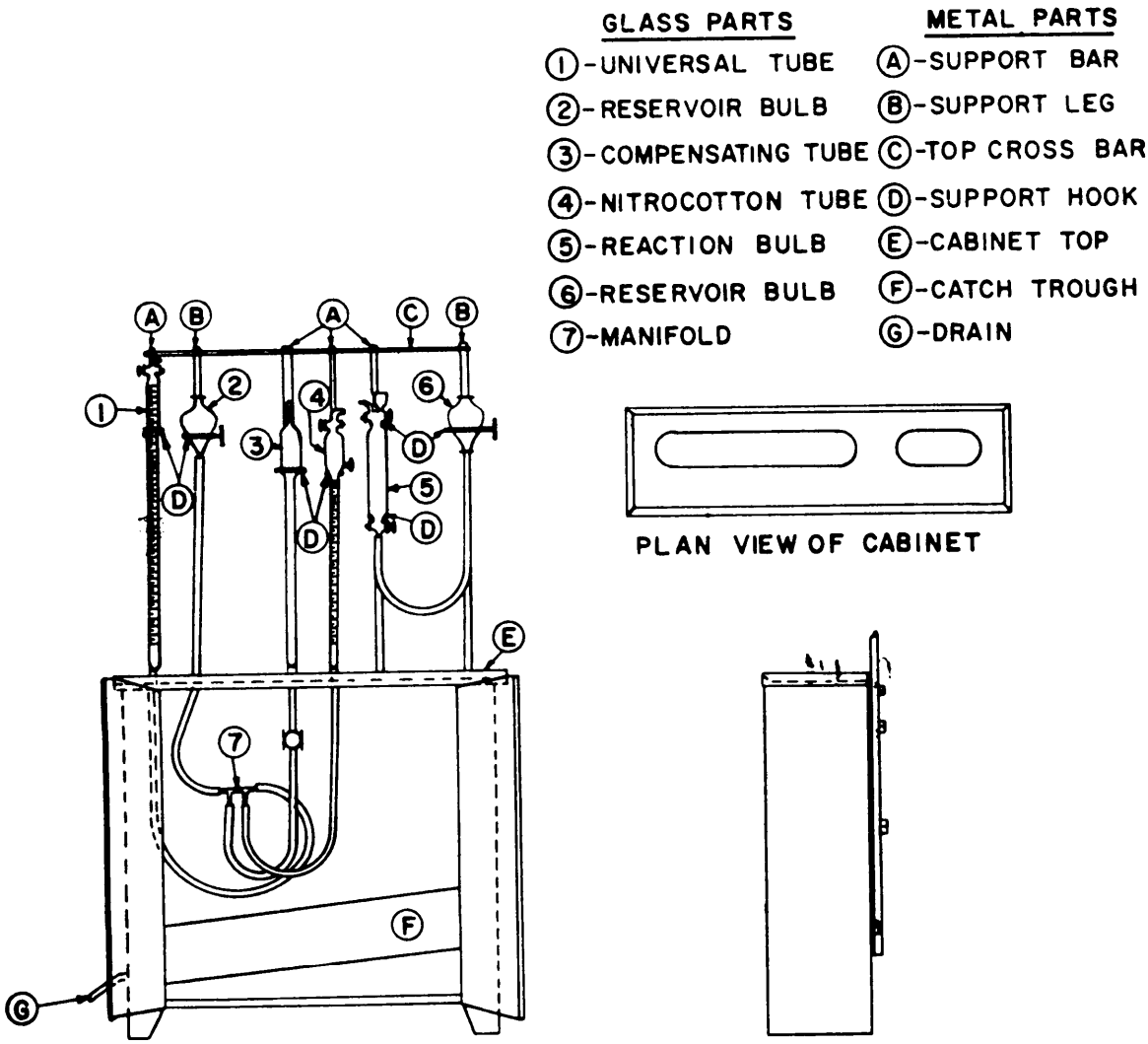

150

FIGURE 1. *Nitrometer with nitrocotton and universal tube.*

Downloaded from http://www.everyspec.com

METHOD 416.1
TETRACENE (POLAROGRAPHIC METHOD)

1. SCOPE.

1.1 This method is used to determine the tetracene content of explosives.

2. SPECIMEN.

2.1 The specimen shall consist of approximately 0.2 gm. of the explosive.

3. APPARATUS.

3.1 Volumetric flask, 100 ml.

151

3.2 Polarograph (Sargent Recording Polarograph, Model XXI, or equivalent).

3.3 Polarographic cell, dropping mercury electrode, held in constant temperature bath maintained within 0.5°C. of room (or any convenient) temperature.

Note. See Kolthoff, I. M. and Lingane, J. J. Polarography, Vol. 1, Second Edition, Page 353, Fig. XVII-1 (Interscience Publishers, Inc., N. Y., 1952).

4. MATERIALS.

4.1 Sulfuric acid solution, 50-percent (1:1).

4.2 Gelatin, 0.50-percent aqueous solution (freshly prepared).

4.3 Nitrogen (humidified by passing through water).

5. PROCEDURE.

5.1 Prepare a standard graph of wave height in millimeters against concentration of tetracene in milligrams per 100 ml. as follows:

a. Weigh out 0.1000 gm. of tetracene, and transfer it to a 100 ml. volumetric flask.

b. Dissolve the tetracene in 60 ml. of the sulfuric acid solution and dilute to mark with distilled water.

c. Transfer appropriate aliquots of the tetracene solution to four 100 ml. volumetric flasks and fill each flask to a 60 ml. mark with 50-percent sulfuric acid.

d. Add 2.0 ml. of 0.50-percent gelatin solution to each flask and dilute to 100 ml. mark with distilled water.

e. Transfer each solution to a polarographic cell, and obtain a polarogram for each as described in Paragraph 5.3.

f. On linear graph paper, plot the wave height in millimeters against the weight of tetracene in milligrams.

g. Draw the straight line which most nearly approximates the values obtained.

Note. This graph is valid only when the determination is made with the same capillary as that used in preparing the graph, and so long as the capillary characteristic of the dropping mercury electrode remains constant The capillary characteristic of the electrode should, therefore, be checked at the time the graph is made, and rechecked at the intervals of about a month. If the characteristic changes by more than 0.05 units from the original value, a new capillary should be selected and a new graph prepared.

5.2 Prepare the specimen for polarographing as follows:

a. Extract the specimen with suitable solvents as described in Method 301.3 retaining the residue.

b. To the residue retained in a filtering crucible add exactly 60 ml. of cold 1:1 sulfuric acid solution.

Downloaded from http://www.everyspec.com

c. Swirl for about 2-5 minutes or until the tetracene is dissolved.

d. Filter and wash the crucible several times with water.

e. Collect the filtrate and washings in a 100 ml. volumetric flask.

f. Add 2.0 ml. of 0.50-percent gelatin solution, dilute to mark with distilled water and mix.

g. Transfer a portion of this solution to the polarographic cell.

5.3 Obtain a polarogram of the solution as follows :

a. Place the cell in the constant temperature bath (par. 3.3).

b. Flush nitrogen through the solution for 7 to 10 minutes. Thereafter, allow the gas to flow over the solution.

c. Adjust the galvanometers of the polarograph to zero, and obtain a polarogram for the solution between 0 to -0.8 volt vs. (S.C.E.) .

d. Produce a second polarogram from the same solution, and find the average wave height for the two polarograms.

5.4 Using the average of the two polarograms obtained for the explosive, read the amount of tetracene present in the solution from the standard graph.

5.5 Calculate the percentage of tetracene in the explosive as follows:

$$\text{Percent tetracene} = \frac{100A}{W}$$

where:

A = weight of tetracene as obtained from graph.

W = weight of specimen represented by the aliquot taken.

152

Downloaded from http://www.everyspec.com

METHOD 417.1
SODIUM (MAGNESIUM URANYL ACETATE METHOD)

1. SCOPE.

1.1 This method is used to determine the sodium content as an impurity in explosives.

2. SPECIMEN.

2.1 The specimen shall consist of a portion of the sample, weighed to within 0.1 reg., containing 25 mg. of sodium or less.

3. APPARATUS.

3.1 Hot plate.

153

3.2 Water bath.

3.3 Gooch crucible or equivalent.

3.4 Suction filtering apparatus,

3.5 Oven.

4. MATERIALS.

4.1 Magnesium uranyl acetate (M.U.A.) reagent. Place 160 gm. of uranium acetate, 180 gm. of magnesium acetate, 45 gm. of glacial acetic acid and 750 ml. of distilled water in a Florence flask. Heat at 70°C. until all the salts are dissolved and allow to cool to 20°C. Transfer the solution to a 1000 ml. volumetric flask and make up to mark with distilled water at 20°C. The solution is stable for prolonged periods (8 months) if kept away from direct sunlight.

4.2 Alcohol wash solution-isopropanol alcohol, 96-percent.

5. PROCEDURE.

5.1 Prepare the specimen as specified in Method 301.8. Dissolve the ash in hot water and filter using a 40 Whatman or equivalent filtering paper, catching the filtrate in a 250 ml. beaker. Remove interfering substance from the resulting solution as specified in the applicable explosive specification, obtaining a neutral solution preferably in the form of chloride.

Note. If the prepared solution contains more than 25 mg. of sodium, dilute the solution to a definite volume with distilled water in a volumetric flask, and take an aliquot portion containing 25 mg. of sodium or less.

5.2 Evaporate the solution on a hot plate to a volume of approximately 1 ml.

5.3 Cool to room temperature and add rapidly 100 ml. of M.U.A. reagent.

5.4 Partially immerse the vessel containing the mixture in a water bath maintained at 25° ± 1°C. and stir vigorously for 30 minutes.

5.5 Filter through a tared Gooch crucible using gentle suction, transferring the precipitate to the crucible by means of the alcohol wash liquid.

5.6 Wash the precipitate with 10-five ml. portions of the alcohol wash liquid, allowing the crucible to be sucked dry after each washing.

5.7 Dry the crucible and contents in an oven at 105° to ll0°C. for 30 minutes, cool in a desiccator and weigh.

5.8 Calculate the percent sodium as follows:

$$\text{Percent sodium} = \frac{1.53 \times A}{W}$$

Downloaded from http://www.everyspec.com

where:

A = weight of the sodium magnesium uranyl acetate, gm.

W = weight of the original sample, gm.

154

Downloaded from http://www.everyspec.com

METHOD 501.1
75°C International Test Method

1. SCOPE

1.1 This method is used to determine volatility or decomposition in explosives by subjecting them to a temperature of 75°C. at atmospheric pressure.

2. SPECIMEN.

2.1 The specimen shall consist of approximately 10 gm. of the explosive weighed to within 0.5 mg.

3. APPARATUS.

3.1 Oven maintained at 75° ± 0.5°C.

3.2 Lipless beaker, 35 mm. in diameter and 50 mm. high with a watch glass cover.

3.3 Desiccator containing an indicating desiccant.

4. PROCEDURE.

4.1 Transfer the specimen to the beaker, (par. 3.2), cover with a watch glass and weigh.

4.2 Heat at 75°C. for 48 hours, cool in a desiccator, and weigh.

4.3 Calculate the loss in weight to percent of volatility of the sample.

4.4 Note if the material has undergone decomposition or is markedly volatile as indicated by:

a. Discoloration.

b. The appearance of colored fumes above the material.

c. The development of an odor indicating acidity.

d. A loss in weight distinctly greater than the moisture content determined by a method appropriate for the material.

Downloaded from http://www.everyspec.com

Downloaded from http://www.everyspec.com

METHOD 502.1
100°C Heat Test Method

1. SCOPE.

1.1 This method is used for determining the stability of explosives by subjecting them to 100°C. at atmospheric pressure.

2. SPECIMEN.

2.1 The specimen shall consist of approximately 0.6 gm. of the explosive as received.

3. APPARATUS.

157/158

3.1 Oven, maintained at 100° ± 1°C.

3.2 Test tubes (preferably pyrex glass) approximately 10 mm. in diameter and 75 mm. in length.

3.3 Perforated pipe bomb.

3.4 Desiccator containing an indicating desiccant.

4. PROCEDURE.

4.1 Determine the moisture content of the specimen by a method appropriate for the material. Calculate the percentage of moisture in the sample.

4.2 Transfer specimens to each of two tared test tubes (par. 3.2) and to each of two similar, but untared, test tubes. Enclose the four tubes in the perforated pipe bomb and place in an oven maintained at 100° ± 1°C.

4.3 At the end of 48 hours remove the two tared tubes, cool in a desiccator, and weigh. Replace the tubes in the oven for another 48 hours, cool in a desiccator and reweigh.

4.4 Calculate the percentage loss in weight during each 48-hour period of heating. Subtract the percentage of moisture (4.1) from the percentage loss in weight, calculated for the first 48-hour heating period.

4.5 AIIow the two untared tubes to remain in the oven for 100 hours of continuous heating and note if ignition or explosion occurs.

Downloaded from http://www.everyspec.com

Downloaded from http://www.everyspec.com

METHOD 503.1
100°C. and 120°C. Vacuum Stability Test

1. SCOPE.

1.1 This method is used for comparing the resistance to decomposition by heat of any explosive with that of another; to indicate the presence or absence of unstable impurities in an explosive which is stable at 100°C. or 120°C.

2. SPECIMEN.

2.1 The specimen shall consist of 5 gm. of the dried explosive (or 1 gm. of initiating explosives or explosives of similar sensitivity) weighed to within 10 mg.

157

3. APPARATUS.

3.1 Constant temperature bath.

Note. A bath consisting of a solution of glycerin and water (specific gravity 1.05 for a 100°C test and 1.21 for a 120° C. test has been found satisfactory. Check the temperature of the bath by inserting a thermometer to the bottom of the empty heating tube (fig. 1) immersed in the bath. Adjust the temperature of the bath by adding one or the other of the constituents of the solution.

3.2 Vacuum stability measuring apparatus (fig. 1), heating tube.

3.3 Vacuum pump.

4. PROCEDURE.

4.1 Standardize the vacuum stability measuring apparatus (flg. 1) as follows:

a. Determine the volume of the heating tube by filling it with mercury from a buret until the mercury reaches the level at which it will contact the ground glass joint of the capillary tube.

b. Determine the unit capacity of the capillary by placing exactly 10 gm. of mercury in its cup, and manipulating the tube so that all the mercury passes into the long (85-cm.) section of the capiIIary. Be sure that the mercury remains as a continuous column. Measure the length of the mercury column at three positions in the long section of the capillary, and average the three measurement. Calculate the unit capacity of the capillary, using the following formula:

$$B = \frac{W}{13.59L}$$

where:

B = unit capacity of capillary, ml. per mm.

W = weight of mercury, gm.

L = average length of mercury column, mm.

4.2 Place the dried specimen in the heating tube (fig. 1).

4.3 Coat the ground glass joint of the capillary tube with a light film of petroleum jelly, and make an airtight connection between the heating tube and the capillary by pressing the tube up against the capillary with a twisting motion.

4.4 Mount the apparatus on a rack so that the long section of the capillary is nearly vertical, and the cup at the bottom rests on a solid support.

4.5 Fill the cup with 7.0 ml. of mercury and connect a vacuum line to the mouth of the cup.

4.6 Evacuate the capillary to a pressure of approximately 5 mm. of mercury (absolute).

Downloaded from http://www.everyspec.com

Note. Evacuation will be facilitated by tilting the apparatus until the capillary opening in the bottom of the cup is free of mercury.

4.7 When the pressure has been reduced to 5 mm. of mercury, remove the vacuum line and allow the mercury to enter the capillary. Record the following data:

a. Length of capillary from heating tube joint to surface of mercury pool in cup (C_1).

b. Height of mercury column above the surface of the mercury pool (H_1).

c. Barometric pressure in millimeters of mercury (P,).

d. Temperature of room in degrees centigrade (t,).

4.8 Immerse the heating tube in the constant temperature bath being careful not to loosen the connection between the heating tube and the capillary. Heat tube for 40 hours.

4.9 Remove the tube from the constant temperature bath and allow to cool to room temperature.

4.10 Record the following data:

a. Length of capillary from heating tube joint to the surface of the mercury pool in the cup (C).

b. Height of mercury column above the surface of the mercury pool (H).

c. Barometric pressure in millimeters of mercury (P).

d. Temperature of the room in degrees centigrade (t).

4.11 Calculate the volume of gas (at standard temperature and pressure) liberated during test, as follows:

$$\text{Volume of gas, ml.} = \left\{A + C\,B\right\}\left\{\frac{273 - H}{760\,(273 - t)}\right\} - \left\{-A + C_1 B\right\}\left\{\frac{273P_1 - H_1}{760\,(273 + t_1)}\right\}$$

160

where:

A = volume of heating tube (less 5 ml. allowance for specimen).

B = unit capacity of capillary ml. per mm. (par. 4.1).

C = length of capillary from heating tube joint to top of mercury column at END of test, mm. (par. 4.10).

C_1 = length of capillary from heating tube joint to top of mercury column at BEGINNING of test, mm. (par. 4.7).

H = height of mercury column above surface of mercury pool at END of test, mm. (par. 4.10).

H_1 = height of mercury column above surface of mercury pool at BEGINNING of test, mm. (par. 4.7).

P = atmospheric pressure at END of test, mm. (par. 4.10).

P_1 = atmospheric pressure at BEGINNING of test, mm. (par. 4.7).

t = temperature of room at END of test, °C. (par. 4.10),

t_1 = temperature of room at BEGINNING of test, °C. (par. 4.7).

Downloaded from http://www.everyspec.com

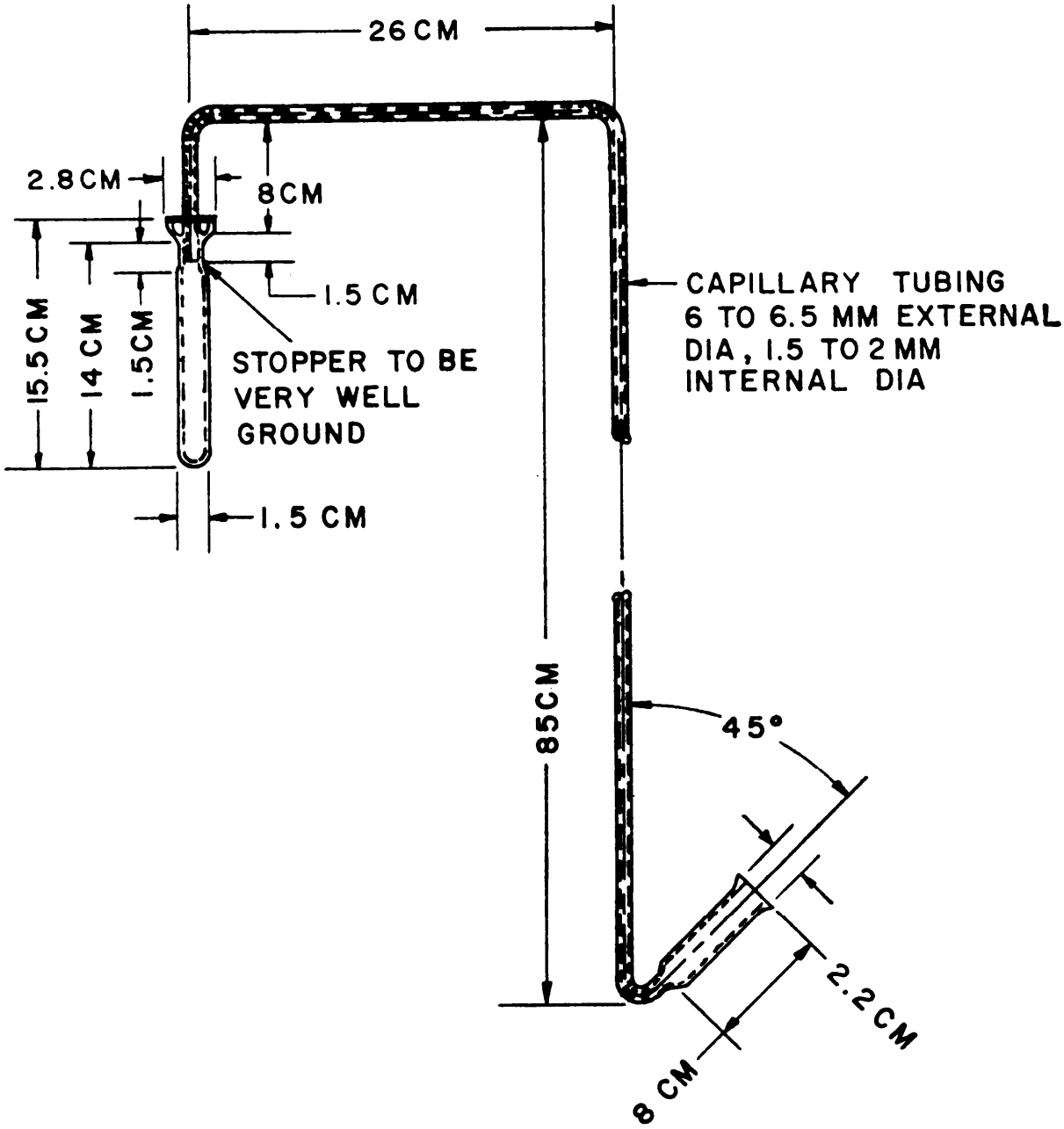

FIGURE 1. *Apparatus for vacuum stability test.*

Downloaded from http://www.everyspec.com

Downloaded from http://www.everyspec.com

METHOD 504.1
REACTIVITY TEST

1. SCOPE.

1.1 This method is used for determining the reactivity of an explosive with contact material.

2. SPECIMEN.

2.1 The specimen shall consist of 5 grams of the explosive and 5 gm. of the contact material. A 2.5 gm. portion of each of the materials is tested as received except in the case of solvent containing contact materials (paints, adhesives, etc.) which would in normal usage be in the dry state. In this case the materials are air dried on glass plates and removed in the form of films for testing. The remaining portion of the explosive and contact material are reduced to a practicable fineness for intimacy of contact. Explosives are pulverized under gentle pressure in an agate mortar; metals are tested as fine milled chips or fillings; films, cloth and paper are cut into 1\8 inch squares; propellants are rasped or milled to a fineness of approximately 12 mesh.

163/164

3. APPARATUS.

3.1 The apparatus used in this method is identical with that used in Method 503.1.

4. MATERIALS.

4.1 Contact materials as specified in the applicable method or specification.

5. PROCEDURE.

5.1 Standardize the vacuum stability measuring apparatus as described in Method 503.1, Paragraph 4.1.

5.2 Place 2.5 gm. of explosive in one heating tube and 2.5 gm. of contact material in" a second heating tube.

5.3 In a third tube place a mixture of 2.6 gm. of the explosive and 2.5 gm. of contact material.

5.4 Determine the volume of gas evolved as specified in Method 503.1, Paragraph 4.3 to 4.12.

5.5 Determine from the amount of gas produced by the mixture of contact material and the explosive in excess of the amount of gas evolved by the materials themselves, as follows :

Gas due to reactivity, ml = A — (B + C).

Downloaded from http://www.everyspec.com

Downloaded from http://www.everyspec.com

METHOD 505.1
IMPACT SENSITIVITY TEST
(U.S. BUREAU of MINES APPARATUS)

1. SCOPE.

1.1 This method is used for determ the sensitivity to impact of explosives when not under confinement.

2. SPECIMEN.

2.1 The specimen shall consist of approximately 0.020 gm. of the 50/100 mesh explosive (0.007 ± 0.002 gram for a liquid explosive).

3. APPARATUS.

3.1 The apparatus for this test (figs. 1 and 2) consists essentially of an impact block, a plunger, and a weight which can be dropped from any desired height between 1 and 100 cm. The details of the base block and plunger tip are given in Picatinny Arsenal Drawing No. PB-45147.

165

3.2 The impact block has an easily replaceable insert of hardened steel having a Rockwell hardness of C–63 ± 2, and is supported by a steel base imbedded in a large block of reinforced concrete. The hardened steel insert has a very uniform, smooth, mirror-like surface.

3.3 The plunger is located directly over the impact block and is supported by a heavy frame work which is imbedded in the same base as the impact block. The plunger is equipped with a replaceable hard steel tip 1 cm. in diameter having a Rockwell hardness of C–63 ± 2. The plunger is held in position by a metal sleeve which fits snugly, and the apparatus is so constructed that the plunger can be raised about 2.5 cm. above the block and locked in this position by means of a rod which extends horizontally from the plunger.

3.4 Weights of 500, 1000, and 2000 gm. are used with the apparatus. Only one of these weights is used at one time. The weight to be used is inserted between two guide bars extending from the plunger frame to the frame at the top of the apparatus. The weight is raised to the desired height by means of an encased magnetic coil held in place by sleeves attached to the two guide bars. A contact point which breaks the electromagnetic circuit and allows the weight to fall when touched by the contact point can be set at any desired height by means of the screw lift, which is equipped with a dial indicating the height of fall of the weight in centimeters. (The zero point should be checked before using the machine.) The magnetic coil assembly is raised by a motor-driven chain hoist which is supported by two sprockets located at the top and bottom of the guide bars. The chain engages the magnetic assembly by means of a pin extending from each side of the chain. After the contact point on the magnetic assembly touches the upper contact point and allows the weight to fall, a rod with a cone-shaped tip extending down from the frame supporting the upper contact point releases the magnetic assembly from the chain hoist pin by spreading apart the spring-held supports extending from the assembly, allowing the assembly to fall slowly down to the weight.

3.5 The impact block insert and plunger tip should be examined frequently to insure that the plunger tip rests evenly on the impact bIock insert so that the force of impact is distributed uniformly over the entire area between the plunger tip and impact block

Downloaded from http://www.everyspec.com

insert. This can easily be determined as follows: Place apiece of new carbon paper on a piece of plain white paper and place the two sheets on the impact block so that the plain paper is on the bottom. Bring the plunger tip down to rest on the carbon paper and then drop the weight from a convenient height seas to make a visible imprint on the plain paper. The carbon imprint on the plain paper should be uniform in color density. If the impact block is found to be unsatisfactory, place small pieces of thin sheet metal under the low area until a satisfactory position is obtained.

3.6 When the apparatus is assembled it should be checked by determining impact test values for standard explosives, such as lead styphnate, tetryl and TNT, having a wide range of drop test values. The test values of standard lead styphnate, tetryl and TNT are 17cm., 26 cm. and 100 + cm., respectively, when a 2 kg. weight is used.

4. PROCEDURE.

4.1 Lock the plunger in the raised position and insert the weight between the guide bars.

4.2 Close the magnetic circuit and bring the weight into contact with the magnetic lifter.

4.3 Set the upper contact point so that the weight will be released from such a height that the resulting impact may be expected to cause explosion.

4.4 Place the specimen in the center of the impact block.

4.5 Center the specimen as follows:

a. Solid Explosives. Lower the plunger to the impact block, place a centering device around the plunger, hold firmly and raise the plunger to the lock position. Weigh the explosive and place it in the centering de vice, distributing it evenly with a very small brush. Lower the plunger gently upon the explosive and remove the centering device. If the sample is not visible around the entire edge of the tip, raise the plunger, lock it into place and recenter the sample.

b. Liquid Explosives. Place a disc of dried filter paper, Whatman No. 1 or equivalent, 9.5 mm. in diameter in the center of the anvil. (The paper should be dried for an hour at 95-100°C. and stored in a small desiccator containing anhydrous calcium chloride.) Transfer the explosive to the filter paper disc. Lower the plunger onto the disc, making sure that the disc is centered under the plunger tip.

4.6 Start tie motor which operates the chain hoist, and as soon as the weight falls, shut off the motor switch.

4.7 If no explosion occurs, as indicated by absence of fire, smoke, or noise, remove the sample from the impact block and plunger tip and repeat the test. 166

4.8 Drop the weight from increasing heights on new portions of the sample until explosion occurs.

4.9 Record as the test value the minimum height in centimeters from which the falling weight, by impact, causes explosion of the sample in at least one of ten tests and from one centimeter below which the falling weight by impact, causes no explosions in ten tests.

Note. After each explosion, carefully clean the block and plunger tip with fine abrasive paper (a Carborundum or emery abrasive paper of grit No. 0 has been found satisfactory). When cleaning the tip, place the abrasive paper on the block and allow the tip and plunger to rest on the paper. Then move the paper horizontally between the block and plunger tip so that the surface of the tip does not become rounded at the edges. If either the impact block or plunger tip is dented, cracked, **or** deformed in any way, replace it before making further tests.

Downloaded from http://www.everyspec.com

167

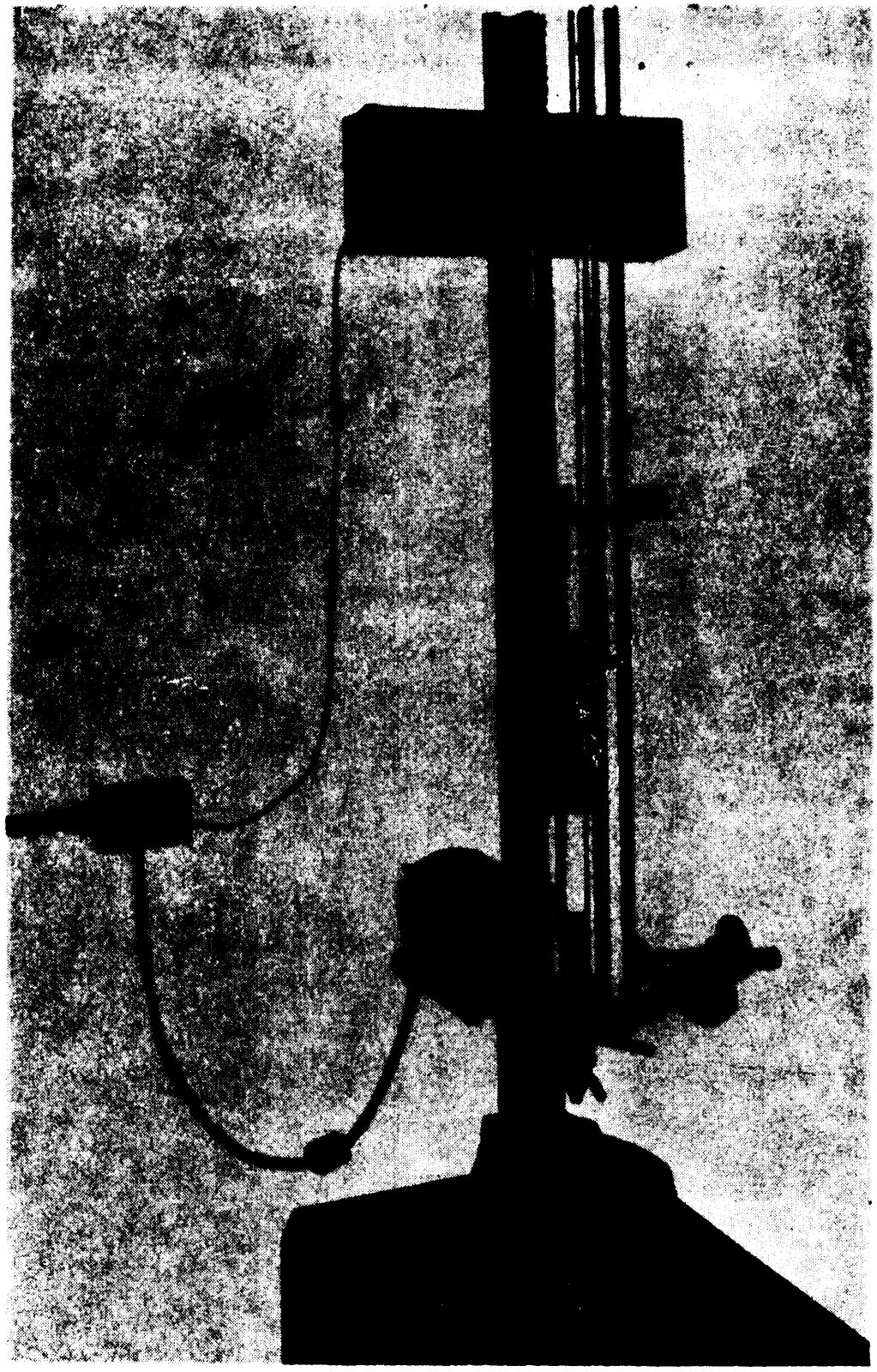

FIGURE 1. *Impact test, Bureau of Mines apparatus.*

Downloaded from http://www.everyspec.com

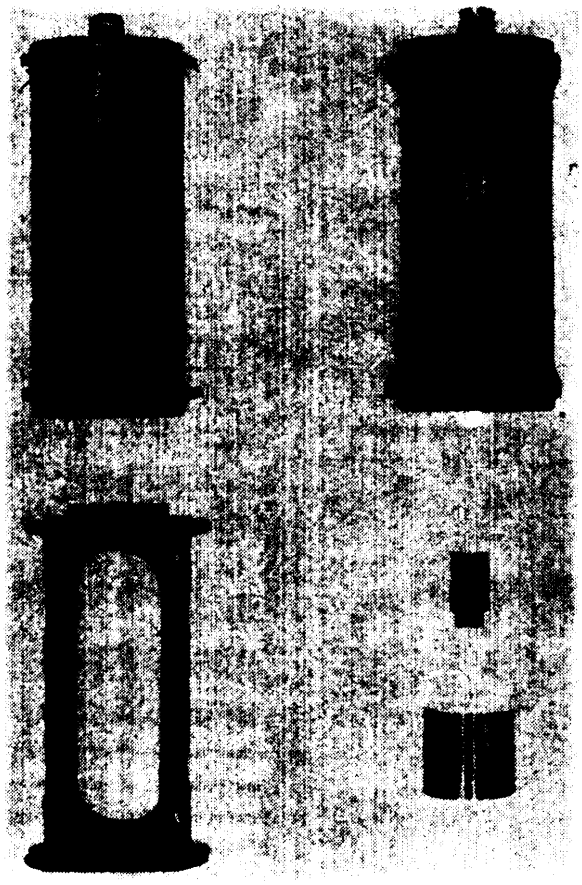

168

FIGURE 2. *Weights, plunger tip, and base block for impact test, Bureau of Mines apparatus.*

Downloaded from http://www.everyspec.com

METHOD 506.1
EXPLOSION TEMPERATURE TEST

1. SCOPE.

1.1 This method is used for determining the minimum temperature at which an explosive will ignite or explode.

2. SPECIMEN.

2.1 The specimen shall consist of approximately 0.02 gram (0.01 gram of initiating explosives) of the explosive that passes through a No. 50 U.S. Standard Sieve.

3. APPARATUS.

169

3.1 The explosion temperature test apparatus (fig. 1) consists of a multiple unit electric furnace (A) equipped with a rheostat (B) to control the temperature. An iron crucible having a capacity of approximately 100 cc. is placed in the electric furnace. This iron crucible contains approximately 75 cc. of Wood's metal, an alloy composed of 50-percent bismuth, 25-percent lead, 12.5-percent tin and 12.5-percent cadmium, which melts at about 65.5°C. A calibrated thermocouple is immersed in the molten metal bath and connected to an indicating thermoelectric pyrometer (D) with a temperature range from 0° to 1400°C., graduated at 10° intervals.. The apparatus is equipped with a clamp (F) which can be lowered into the bath by lifting a counter weight (H). The arm holding the clamp is provided with a stop so that a fixed depth of immersion of the test caps is insured. Place a shatter-proof glass barricade (E), firmly supported (G), in front of the apparatus.

4. PROCEDURE.

4.1 Load 75 to 80 No. 8 commercial blasting caps by placing a specimen in each and then tapping the cap sufficiently to compact the explosive.

4.2 By means of the clamp and lowering device immerse each loaded cap in succession in the metal bath, and determine the bath temperature and the time of immersion required to cause each to flash or explode.

4.3 Vary the temperature of the metal bath between determinations so to have the 10 flashes or explosions occur over a time-interval range of approximately 2 to 10 seconds.

4.4 Plot a time-temperature curve and select from this curve the temperature necessary to cause the explosive to flash or explode after immersion in the metal bath for 5 seconds. Record this temperature as the ignition temperature of the explosive under test.

4.5 With certain difficult ignitable explosives, it is necessary to plot the average of from 2 to 5 explosions at each of 10 intervals over the range from 2 to 10 seconds in order to obtain a valid time-temperature curve.

Downloaded from http://www.everyspec.com

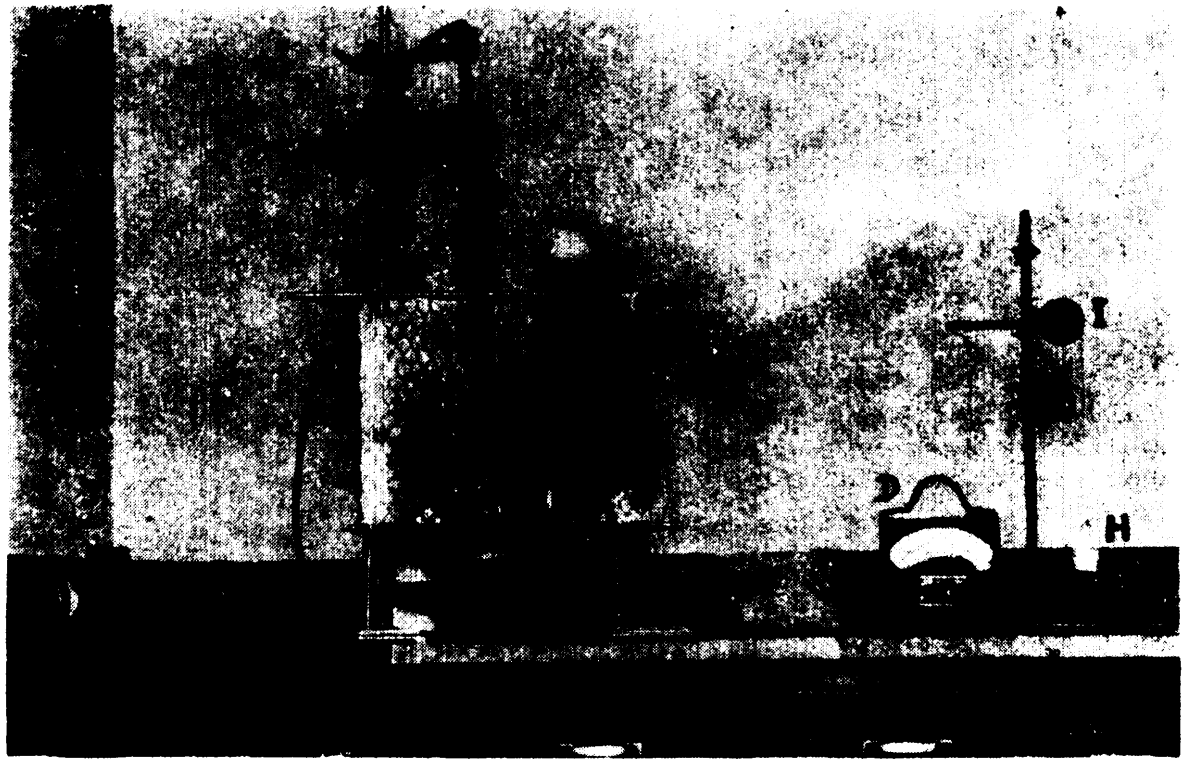

170

FIGURE 1. *Explosion temperature test apparatus.*

Downloaded from http://www.everyspec.com

METHOD 507.1
SENSITIVITY TO INITIATION (SAND TEST METHOD)

1. SCOPE.

1.1 This method is used to determine the sensitivity of an explosive to the initiating action of primary explosives (detonators) by ascertaining the minimum amount of detonating material which will initiate an explosive with certainty.

2. SPECIMEN.

2.1 The specimen shall consist of 0.400 gm. of the explosive that passes through a No. 100 U.S. Standard Sieve.

171

3. APPARATUS. (See figs. 1 and 2.)

3.1 No. 6 or No. 8 commercial blasting caps composed of copper, gilding metal or aluminum, having an internal diameter of 0.222 ± 0.002".

3.2 Aluminum caps having the following dimension!: Length 2.00 ± 0.05", internal diameter 0.238 ± 0.005", wall thickness 0.025 ± 0.001".

3.3 Reinforcing caps (fig. 2).

3.4 U.S. Standard Sieves — Nos. 20, 30 and 100.

3.5 Loading block with base fixture.

3.6 Plunger 0.219 ± 0.001" in diameter.

3.7 Press capable of exerting a pressure of 3000 lbs/sq. in. Refer to Picatinny Arsenal Drawings CP-15481, CP-23923 and SK-3857.

3.8 Crimper.

3.9 Test bomb.

3.10 Mallet.

3.11 Rotap machine.

3.12 Glazed paper.

4. MATERIALS.

4.1 Ottawa sand ASTM Standard which passes through No. 20 U.S. Standard Sieve and is retained on No. 30 U.S. Standard Sieve.

4.2 Miner's black powder fuzes.

4.3 Tetryl that passes through a No. 100 U.S. Standard Sieve.

4.4 Lead azide.

5. PROCEDURE.

5.1 Transfer a specimen to each of five blasting caps. Insert in each a reinforcing cap so that the end with the greater diameter contacts the explosive. Place the cap in a loading block assembled to base fixture (fig. 1), insert a plunger 0.219 ± 0.001" in diameter, and press the explosive charge at 3000 lbs/sq. in. (111 lbs. actual load) for three minutes, using a press (3.7) that is suitably barricaded.

5.2 With a pin, prick the powder train in one end of a piece of miner's black powder fuze 8 or 9 inches long. Crimp to the pricked end one of the caps loaded as directed above, taking care that the end of the fuze is held firmly against the charge in the cap. Crimp near the mouth of the cap so as to avoid squeezing the charge.

5.3 Pour 80.0 ± 0.1 gm. of Ottawa sand (4.1) into the cavity of the sand test bomb (fig. 1) and level it by striking the bomb vigorously with a mallet at least 5 times while rotating the bomb on its axis.

Downloaded from http://www.everyspec.com

5.4 Lower the fuze andcap into the bomb cavity so that the cap is centered at the axis of the bomb and just touches the sand. Hold the cap and fuze in this position and carefully pour 120.0 ± 0.1 grams more of the sand into the bomb, being careful not to disturb the position of the cap.

Note. To avoid possible error caused by the explosion blowing crushed sand through the hole in the cover, slip a piece of rubber tubing, about 1/8 inch long that fits the fuze snugly, over the fuze and adjust at a point on the fuze so that the tubing will be against the inner side of the bomb cover, with the loaded cap in position as described above.

5.5 Carefully insert the fuze through the hole in the bomb cover and lower the cover into position and fasten securely. Then strike the bomb vigorously with a mallet five times while rotating the bomb on its axis.

5.6 Light the fuze and after the explosion has taken place, empty the bomb onto a sheet of smooth (glazed) paper, taking care to remove any sand which may adhere to the interior of the bomb and the bomb cover, and the pieces of the detonator cap and burnt fuze.

5.7 Transfer all the sand to a No. 30 U.S. Standard Sieve fitted with a bottom pan and a cover. Shake the assembly to separate, quantitatively, the sand which has been crushed finely enough to pass the No. 30 U.S. Standard Sieve. (Shaking for 3 minutes on a mechanical shaker which moves back and forth horizontally 225 times per minute with a 3“ stroke has been found to be satisfactory) .

5.8 Weigh the sand which passes through the sieve. Record the average of the five values obtained in this manner.

5.9 Transfer specimens to each of five additional caps. Press the charge at 3000 lbs/sq. in. for three minutes. Add a weighed charge of 0.300 gram of lead azide, insert a reinforcing cap, and press the charge at 3000 lbs/sq. in. for three minutes. Determine the weight of sand crushed by each charge as directed above, and correct this by subtracting the weight of sand found to be crushed by 0.300 gm of lead azide alone. Record the average of the five corrected values obtained in this manner.

5.10 Report the Sensitivity to Initiation as follows :

a. If the corrected values obtained with an initiating charge of lead azide do not vary by more than 3.0 gin., and the average corrected value does not exceed by more than 2.0 grams the average value obtained without an initiating charge, report the explosive under test to be sensitive to initiation by flame alone.

b. If the average corrected value obtained with lead azide initiator exceeds, by more than 2.0 grams, the average value obtained without lead azide, transfer specimens to each of five additional caps. Place each cap in a loading block, attach the base fixture and press the charge at 3000 lbs/sq. in. for three minutes. Add a weighed charge of 0.100 gram of tetryl and press at 3000 lbs/sq. in. for three minutes. Add a weighed charge of 0.200 gram of lead azide, insert a reinforcing cap, and press at 3000 lbs/sq. in. for three minutes. Determine the weight of sand crushed by each charge as directed above, correct this by subtracting the weight of sand found to be crushed by a charge of 0.100 gram of tetryl and 0.200 gram of lead azide. Record the average of the corrected values obtained in this manner.

c. If the average corrected value obtained with tetryl and lead azide present does not exceed by more than 2.0 gm. the average corrected value obtained with lead azide alone, repeat the tests with successively smaller weights of lead azide alone. Consider as the minimum detonating charge the minimum weight of lead azide which in five tests yields corrected values which do not vary by more than 3.0 grams and the average corrected

Downloaded from http://www.everyspec.com

value for which is not more than 2.0 grams less than the average corrected value obtained with tetryl and lead azide as the initiating charge.

d. If the average corrected value obtained with tetryl and lead azide as the initiating charge exceeds by more than 2.0 gm. the average corrected value obtained with 0.300 gm. lead azide as the initiating charge, determine the minimum detonating charge of tetryl required to cause detonation of the explosive at its maximum rate. Repeat the test with successively larger or smaller weights of tetryl and 0.200 gm. charges of lead azide. Consider as the minimum detonating charge the minimum weight of tetryl which in five test yields corrected values which do not vary by more than 3.0 grams, and the average corrected value for which is not more than 2.0 gm less than the maximum average corrected value obtained with tetryl and lead azide as the initiating charge.

173

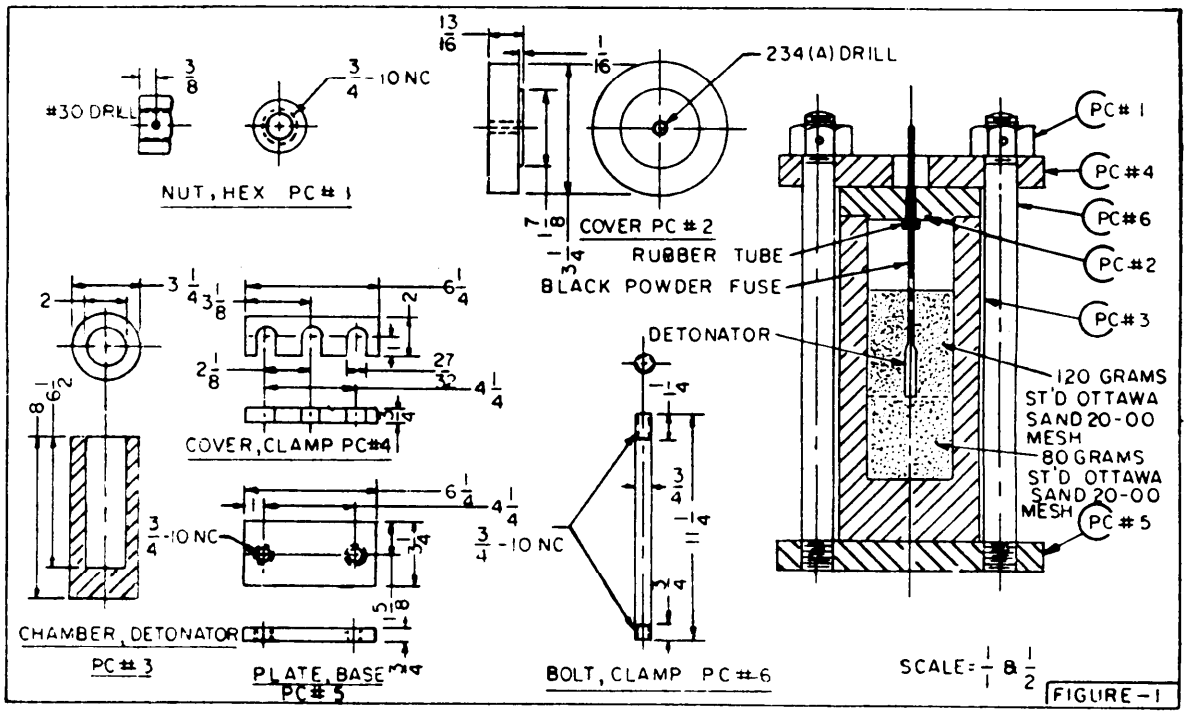

FIGURE 1. *Sand test bomb.*

Downloaded from http://www.everyspec.com

174

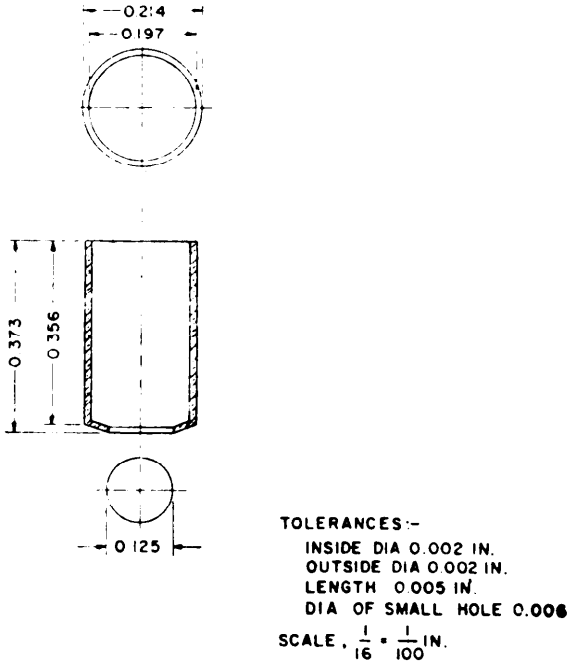

FIGURE 2. *Reinforcing cap, gilding metal.*

Downloaded from http://www.everyspec.com

METHOD 508.1
BRISANCE

1. SCOPE.

1.1 This method is used to determine the brisance of an explosive by measuring its ability to shatter sand in a confined vessel.

2. SPECIMEN.

2.1 The specimen used in this method is identical with that used in Method 507.1.

3. APPARATUS.

175/176

3.1 The apparatus used in this method is identical with that used in Method 507.1.

4. MATERIALS.

4.1 The materials used in this method are identical with that used in Method 507.1.

5. PROCEDURE.

5.l Determine the brisance of a solid explosive as follows:

a. Follow the procedure described in Method 507.1 for the determination of the sensitivity to initiation, initiating the specimen by means of the following:

1. Flame from a fuze.
2. 0.300 gm. of lead azide.
3. 0.100 gm. of tetryl and 0.200 gm. of lead azide.
4. 0.250 gm. of tetryl and 0.200 gm. of lead azide.

b. Consider as the brisance the maximum average corrected value obtained. If the explosive is sensitive to initiation by flame, record also the average value obtained with' such initiation.

5.2 Determine the brisance of a liquid explosive as follows:

a. Cut the closed end from five No. 6 commercial blasting caps, and load one end of the resulting cylinder with first 0.25 gram of tetryl and on top of this 0.20 gram of lead azide, using a pressure of 3000 psi, and a 3 minute dwell to consolidate each charge. (See the loading block and base fixture shown in figure 1, Method 507.1.)

b. With a pin, prick the powder train in one end of a piece of miner's black powder fuze 8 or 9 inches long.

c. Crimp the loaded cylinder to the pricked end, taking care that the end of the fuze is held firmly against the charge in the cap. Crimp near the mouth of the cap to avoid squeezing the charge_.

d. Transfer a specimen of the liquid sample to be tested to each of five aluminum caps.

e. Insert the cylinder containing the fuze and booster into the aluminum cap until the tetryl just contacts the liquid sample and secure by crimping the aluminum cap to the No. 6 cap. (It has been found necessary when testing certain low viscosity liquids to place a Scotch tape disc over the exposed tetryl to prevent its penetration and consequent desensitization by the liquid.)

f. The five assemblies are then fired in the sand test bomb in the manner described under Method 507.1 entitled "Sensitivity to Initiation (Sand Test)" and the brisance is taken as the average corrected value obtained.

Downloaded from http://www.everyspec.com

Downloaded from http://www.everyspec.com

METHOD 509.1
INITIATING EFFICIENCY (SAND TEST METHOD)

1. SCOPE.

1.1 This method is used to determine the initiating efficiency of primary explosives by determining the minimum quantity of the particular detonator (such as tetryl) which will completely initiate a fixed quantity of explosive.

2. SPECIMEN.

2.1 The specimen used in this method is identical with that used in Method 507.1.

177/178

3. APPARATUS.

3.1 The apparatus used in this method is identical with that used in Method 507.1.

4. MATERIALS.

4.1 The materials used in this method are identical with that used in Method 507.1.

5. PROCEDURE.

5.1 Using 0.400 gram charges of tetryl and 0.400 gm. charges of the specimen, conduct the sand test as directed in Method 507.1.

5.2 Correct each value by subtracting the weight of sand crushed by the specimen alone. If the corrected values for tetryl do not vary by more than 3.0 grams, and the average of these is within 2.0 gm of the average value for tetryl obtained with 0.300 gram of lead azide, repeat the test using progressively smaller weights of the specimen.

5.3 Consider as the minimum detonating charge of the initiating explosive the minimum weight of this which in five tests yields corrected values for tetryl which do not vary more than 3.0 gm. and the average of which is within 2.0 grams of the average corrected value for tetryl obtained with 0.300 gm. of lead azide.

Downloaded from http://www.everyspec.com

Downloaded from http://www.everyspec.com

METHOD 601.1
HYDROCHLORIC ACID (0.1N STANDARD SOLUTION)

1. SCOPE.

1.1 This method is used for the preparation of a 0.lN standard solution of hydrochloric acid.

2. APPARATUS.

2.1 Storage bottle, clear pyrex glass, 18 liter.

2.2 Drying tube, 150 mm., calcium chloride filled,

2.3 Beaker, 400 ml.

179

2.4 Cylinder, graduated, 50 ml.

2.5 Watch glass.

2.6 Crucible, medium porosity, fritted glass.

2.7 Rubber policeman.

2.8 Wash bottle.

2.9 Oven, 140 - 150°C.

3. MATERIALS.

3.1 Hydrochloric acid, 38-percent.

3.2 Calcium chloride, reagent grade.

3.3 Silver nitrate solution: Dissolve 24 gm. silver nitrate in water. Add 90 ml. of 70-percent nitric acid and dilute to one litir. Store in dark bottle.

3.4 Silver nitrate wash solution: 0.050 gm. of silver nitrate per liter.

8.5 Sodium chloride solution, l-percent.

3.6 Nitric acid wash solution, 0.01N. Dilute 7 ml. of 70-percent nitric acid to one liter to form an approximately 0.lN solution. Dilute 100 ml. of this solution to one liter to form 0.01N solution as needed.

4. PROCEDURE.

4.1 Prepare the solution as follows:

a. For each liter of solution, add 8.5 ml. of hydrochloric acid to 800 ml. of distilled water and dilute to one liter with distilled" water.

Note. Normally 18 liters of the solution are prepared at one time.

b. Shake intermittently for at least one hour and store.

c. Store this solution in a pyrex bottle protected from atmospheric contamination by means of a 150 mm. drying tube filled with calcium chloride.

4.2 Standardize the solution as follows:

a. Accurately measure 35 to 40 ml. of the hydrochloric acid solution into a 400 ml. beaker.

b. Add 100 to 150 ml. of distilled water.

c. By means of a graduate, add slowly, during the course of 2 – 3 minutes, 45 to 50 ml. of silver nitrate solution, with moderate stirring. The precipitation must be conducted at room temperature in diffuse light, and in the absence of halogen or halogen acid vapors.

d. Cover the beaker with a watch glass and place in a dark area.

e. Allow the precipitate to settle over night at room temperature.

f. Test for completeness of precipitation

Downloaded from http://www.everyspec.com

by adding a few drops of the silver nitrate solution to the supenatant liquid in the beaker.

g. Decant the supernatant liquid slowly through a tared fritted glass crucible and wash the precipitate with five 25 to 30 ml. portions of silver nitrate wash solution.

h. Transfer the precipitate quantitatively to the crucible, using a rubber policeman and a wash bottle containing 0.01N nitric acid.

i. Wash the precipitate with the 0.01N nitric acid solution until the filtrate, when tested with l-percent sodium chloride solution, shows no turbidity.

j. Dry the crucible and contents at 140-150°C. for 2 hours, cool in desiccator for one hour, then weigh.

k. Calculate the normality of the hydrochloric acid as follows:

$$\text{Normality of the hydrochloric acid} = \frac{6.9766A}{B}$$

where:

A = the weight of precipitate, gm.
B = the volume of hydrochloric acid solution used, ml.

Note. If a freshly standardized sodium hydroxide solution is available, hydrochloric acid may be standardized by cross titration as follows:

Measure accurately 30 to 40 ml. of the standard acid into a 250 ml. Erlenmeyer flask or 400 ml. beaker, dilute with 50 to 100 ml. of recently boiled and cooled distilled water and add the proper indicator. Titrate with the standard sodium hydroxide solution until the indicator changes color. Calculate the normality of the hydrochloric acid as follows:

$$\text{Normality of hydrochloric} = \frac{AN}{B}$$

where:

A = volume of sodium hydroxide, ml.
B = volume of hydrochloric acid, ml.
N = normality of sodium hydroxide.

180

Downloaded from http://www.everyspec.com

METHOD 602.1
SODIUM HYDROXIDE (0.lN STANDARD SOLUTION)

1. SCOPE.

1.1 This method is used for the preparation of 0.lN standard solution of sodium hydroxide.

2. APPARATUS.

2.1 Beaker, 2 liter.

2.2 Watch glass.

2.3 Storage bottle, clear pyrex glass, 18 liters.

181/182

2.4 Storage bottle, clear pyrex glass, rubber stoppered, 2 liters.

2.5 Tube, drying, 150 mm., containing Ascarite. (The solution must be protected against CO_2 from air.)

2.6 Beaker, 400 ml.

2.7 Titration apparatus.

3. MATERIALS.

3.1 Sodium hydroxide, C.P., pellet form

3.2 Hydrochloric acid, standard 0.lN solution as specified in Method 601.1.

4. PROCEDURE.

4.1 Prepare a supply of 50-percent sodium hydroxide as follows:

a. To 1300 ml. of water in a 2 liter beaker, add slowly, with stirring, approximately 1350 gm. of sodium hydroxide pellets.

b. Stir intermittently until solution is complete. Cover with a watch glass and let cool to room temperature.

c. Decant into a bottle, close with a rubber stopper and let stand 2 weeks, or preferably longer, until the solution is perfectly clear.

Note. One ml. of this solution contains approximately 0.75 gm of sodium hydroxide.

4.2 Prepare the 0.lN standard solution of sodium hydroxide as follows:

a. For each liter of solution, add 6 ml. of the 50-percent sodium hydroxide to a pyrex bottle containing one liter of CO_2= free water.

Note. Normally 18 liters of the solution are prepared.

b. Mix the solution thoroughly by shaking at hourly intervals during the day, let stand overnight, then shake again.

c. Store this solution in a pyrex bottle protected from atmospheric conditions by a drying tube containing Ascarite.

4.3 Standardize the solution as follows:

a. Measure accurately 30 to 40 ml. of standard 0.1N hydrochloric acid into a 400 ml. beaker and dilute to 100 ml. with freshly boiled and cooled distilled water.

b. Add the proper indicator.

Note. The choice of an indicator to be used in the standardization will depend upon the character of the subsequent titrations. In general, the same indicator should be used for the standardization as for the titration of a sample.

c. Titrate to the end point.

d. Calculate the normality of the standard sodium hydroxide solution as follows:

$$\text{Normality of sodium hydroxide} = \frac{AN}{B}$$

where:

A = volume of hydrochloric acid, ml.

B = volume of sodium hydroxide, ml.

N= normality of hydrochloric acid.

Downloaded from http://www.everyspec.com

Downloaded from http://www.everyspec.com

METHOD 603.1
FERRIC AMMONIUM SULFATE (0.15N STANDARD SOLUTION)

1. SCOPE.

1.1 This method is used for the preparation of a 0.15N standard solution of ferric ammonium sulfate. (The normality of this solution remains constant indefinitely.)

2. APPARATUS.

2.1 Beaker, 600 ml.

2.2 Graduate, 1000 ml.

2.3 Filter paper, Whatman No. 1 or equivalent.

183

2.4 Titration flask (fig. 1).

2.5 Buret.

2.6 Storage bottle, pyrex glass, 18 liter.

3. MATERIALS.

3.1 Hydrated ferric ammonium sulfate, $Fe(SO_4)_3(NH_4)_2SO_4 \cdot 24H_2O$, reagent grade. grade.

3.2 Sulfuric acid, concentrated.

3.3 Hydrochloric acid, 15-percent

3.4 Ammonium thiocyanate, 20-percent solution as specified in Method 707.1.

3.5 Titanous chloride, standard 0.2N solution as specified in Method 605.1 freshly standardized.

3.6 Inert gas (carbon dioxide or nitrogen), hlghest purity, oxygen-free.

4. PROCEDURE.

4.1 Prepare the solution as follows:

a. Pour 400 ml. of distilled water into a 600 ml. beaker, and add 75 gm. of hydrated ferric ammonium sulfate and 25 ml. of concentrated sulfuric solution.

b. Transfer the solution to a 1000 ml. graduate, and dilute to capacity with distilled water. Mix thoroughly by passing a current of air through the solution.

c. Filter the solution through the Whatman No. 1 filter paper.

4.2 Standardize the solution as follows:

a. Attach a source of inert gas to the titration flask, and allow the gas to flow gently for five minutes to displace the air in the flask. Continue the flow of gas through the flask throughout the titration.

b. Transfer an accurately measured portion of 40 to 45 ml. of the ferric ammonium sulfate solution to the titration flask.

c. Add 15 ml. of the 15-percent hydrochloric acid solution.

d. Titrate with newly standardized 0.2N titanous chloride solution until near the end point.

e. Add 5 ml. of the ammonium thiocyanate solution, and continue the titration until the red color just disappears.

4.3 Apply temperature and buret corrections to the observed readings, and calculate the normality of the ferric ammonium sulfate solution, using the following equation:

$$\text{Normality of ferric ammonium sulfate} = \frac{AN}{B}$$

Downloaded from http://www.everyspec.com

where:

A = titanous chloride solution, ml.

B = ferric ammonium sulfate solution, ml.

N = normality of titanous chloride solution.

184

Downloaded from http://www.everyspec.com

185/186

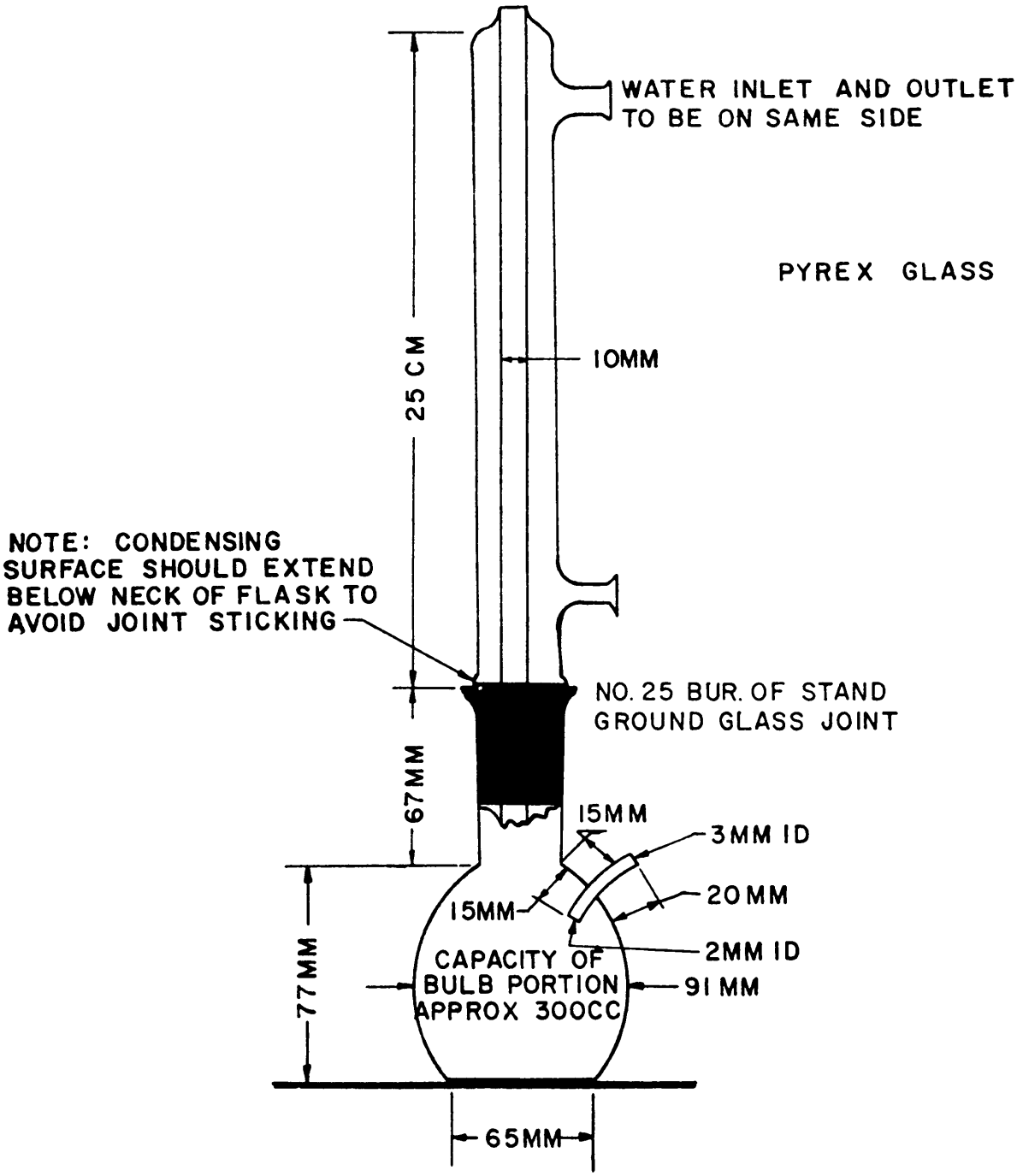

ALL DIMENSIONS ARE APPROXIMATE

FIGURE 1. *All dimensions are approximate.*

Downloaded from http://www.everyspec.com

Downloaded from http://www.everyspec.com

METHOD 605.1
TITANOUS CHLORIDE (0.2N STANDARD SOLUTION)

1. SCOPE.

1.1 This method is used for the preparation of titanous chloride, 0.2N, standard solution.

2. APPARATUS.

2.1 Storage system (fig. 1), consisting essentially of:

a. Storage bottle, amber colored pyrex glass (or clear pyrex glass painted black), 18 liter.

b. Kipp generator for maintaining a protective atmosphere of carbon dioxide.

c. Buret, 50 ml.

2.2 Titration flask (fig. 2).

2.3 Filter paper, Whatman No. 41, fluted.

2.4 Hot plate in a well ventilated hood.

3. MATERIALS.

3.1 Sulfuric acid solution, 10-percent.

3.2 Hydrochloric acid, 38-percent, C.P grade.

3.3 Titanous chloride solution, 20-percent or titanium hydride, reagent grade.

3.4 Barium diphenylamine sulfonate indicator solution as specified in Method 705.1.

3.5 Potassium dichromatic, National Bureau of Standards Sample No. 136, dried for 2 hours at 100°C.

3.6 Ammonium thiocyanate solution, 20-percent.

3.7 Inert gas (carbon dioxide or nitrogen), highest purity, oxygen free.

4. PROCEDURE.

4.1 Prepare the 0.2N solution from a 20 percent titanous chloride solution as follows:

Note. The proportions given in the following procedure will yield one liter of solution. Normally 18 liters are prepared at one time.

a. Mix 150-ml. of 20-percent titanium trichloride solution with 100 ml. hydrochloric acid and dilute the resultant solution to 1 liter with distilled water.

b. Mix the solution thoroughly by passing a current of inert gas through it.

c. Filter the solution through a Whatman No. 41 filter paper until the filtrate is completely clear.

d. Agitate the reagent solution thoroughly with the inert gas for a few minutes and store the solution in the amber storage bottle. Maintain the inert atmosphere during storage, using the apparatus shown in fig. 1.

4.2 Prepare the 0.2N solution from titanium hydride as follows:

a. For each liter of solution required, warm 100 ml. of hydrochloric acid to 70° to 80°C on a hot plate in a well ventilated hood.

b. Add in small portions, 12 gm. of titanium hydride and cover with a watch glass. Remove the watch glass only to add to the solution.

c. Warm the solution on a hot plate until the evolution of hydrogen has nearly ceased.

d. Remove from the hot plate and cool to room temperature.

Downloaded from http://www.everyspec.com

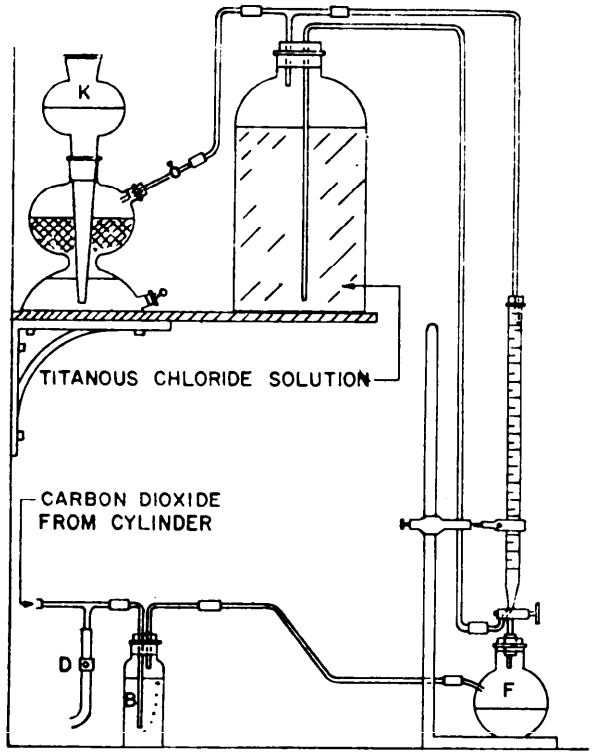

188

FIGURE 1. *Apparatus for storing and using titanous chloride solution.*

Downloaded from http://www.everyspec.com

e. Add approximately 250 ml. of oxygen-free distilled water and thoroughly mix the solution by passing oxygen-free inert gas through it for 5 to 10 minutes.

f. Filter the solution through a filter paper until the filtrate is completely clear.

g. Add 100 ml. of 38-percent hydrochloric acid, dilute the solution to one liter with oxygen-free distilled water.

h. Agitate the solution with the inert gas a few minutes and then store as described in paragraph 4.1.

4.3 Standardize the solution as follows:

a. Attach the source of inert gas to the titration flask, and allow the gas to flow for five minutes to displace the air in the flask. Continue the flow of gas through the flask throughout the entire titration procedure.

189

b. Transfer an accurately weighed portion of 0.3 gm. to 0.4 gm. of potassium bichromate (weighed to within 0.2 reg.) to the titration flask and dissolve in 100 ml. of distilled water.

c. Add 50 ml. of 10-percent sulfuric acid solution.

d. Titrate the solution with the 0.2N titanous chloride solution, until near the end point, as shown by the change in color to green.

Note. The change in color is from brownish purple, to purple, and to a distinct green.

e. Add five drops of barium diphenylamine sulfonate indicator solution, and continue the titration until the end point is reached as shown by the appearance of a light green color that does not change to a light blue color in less than 30 seconds.

Note. The light green color will change to light blue upon standing.' Alternately a 0.5 percent aqueous solution of sodium diphenylbenzidine sulfonate may be used as indicator. The color of the solution at the end point is essentially the same as in the case of barium diphenylamine sulfonate. In case of dispute, however, barium diphenylamine sulfonate shall be used as indicator.

4.4 Make a blank determination to correct for the presence of iron as follows:

a. Add 5 ml. of the 20-percent ammonium thiocyanate indicator solution to the flask. If iron is present, a ferric thiocyanate complex will form and the solution will change from light blue to deep red.

b. Back-titrate the ferric thiocyanate complex with the 0.2N titanous chloride until the light blue color reappears.

4.5 Determine the milliliters of titanous chloride solution required to complete both the titration and the back titration. Add the two values and apply buret and temperature corrections.

4.6 Calculate the normality of the titanous chloride solution using the following equation:

$$\text{Normality of titanous chloride} = \frac{A}{0.04904B}$$

where:

A = potassium bichromate, gm.

B = titanous chloride (including iron blank, temperature and buret corrections), ml.

Downloaded from http://www.everyspec.com

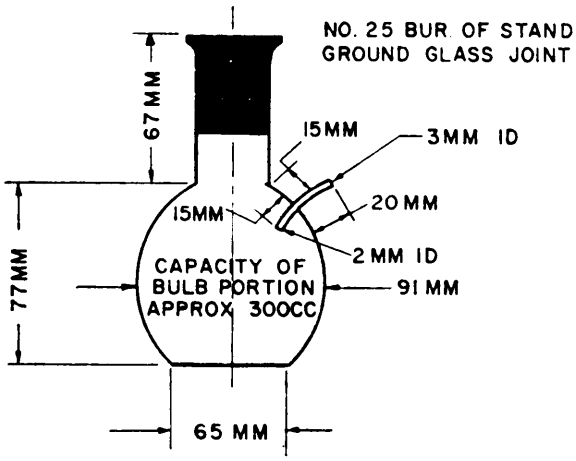

190

ALL DIMENSIONS ARE APPROXIMATE

FIGURE 2. *Titration flask pyrex glass.*

Downloaded from http://www.everyspec.com

METHOD 610.1
POTASSIUM BROMATE (0.05N STANDARD SOLUTION)

1. SCOPE.

1.1 This method is used for the preparation of 0.05N standard solution of potassium bromate.

2. APPARATUS.

2.1 Flask, glass stoppered, 25 ml.

3. MATERIALS.

3.1 Potassium iodide, reagent grade.

3.2 Hydrochloric acid, 38-percent.

3.3 Starch indicator solution as specified in Method 701.1.

3.4 Potassium bromate, reagent grade.

191/192

3.5 Sodium thiosulfate, 0.1N standard solution as specified in Method 613.1.

4. PROCEDURE.

4.1 Prepare the solution as follows:

For each liter of solution dissolve 2.8 gins. of potassium bromate in sufficient water to make 1000 ml. of solution.

4.2 Standardize the solutions follows:

a. Transfer an accurately measured volume of about 40 ml. of the solution to a glass stoppered flask.

b. Add 3 ml. of hydrochloric acid.

c. AI1ow to stand for 5 minutes.

d. Titrate the liberated iodine with 0.lN sodium thiosulfate, adding starch solution toward the end point.

e. Correct for a blank run on the same quantities of the same reagents.

f. Calculate the normality as follows:

$$\text{Normality of potassium bromate} = \frac{NA}{B}$$

where:

N = normality of sodium thiosulfate.

A = sodium thiosulfate used in the titnation, ml.

B = potassium bromate used in the titration, ml.

Downloaded from http://www.everyspec.com

Downloaded from http://www.everyspec.com

METHOD 612.1
SULFURIC ACID (0.lN STANDARD SOLUTION)

1. SCOPE.

1.1 This method is used for the preparation of 0.1N standard solution of sulfuric acid.

2. APPARATUS.

2.1 Beaker, 500 ml.

3. MATERIALS.

3.1 Sulfuric acid, concentrated, C.P. grade, 95-percent.

3.2 Sodium carbonate, anhydrous, reagent grade.

3.3 Methyl orange indicator solution as specified in Method 704.1.

4. PROCEDURE.

193
194

4.1 Prepare the solution as follows:

Add slowly, with stirring, 30 ml. of sulfuric acid to about 1020 ml. of water and allow to cool.

4.2 Standardize the solution as follows:

a. Accurately weigh 1.5 gm. of sodium carbonate which has been heated at a temperature of about 270°C. for 1 hour.

b. Dissolve it in 100 ml. of water.

c. Add 2 drops of methyl orange indicator solution.

d. Titrate by adding the acid slowly from a buret with constant stirring until the color is changed from yellow to pale pink.

e. Calculate the normality of the acid as follows :

$$\text{Normality of sulfuric acid} = \frac{W}{0.053A}$$

where:

W = weight of sodium carbonate, gm.

A = volume of acid used in the titration, ml.

Downloaded from http://www.everyspec.com

Downloaded from http://www.everyspec.com

METHOD 613.1
SODIUM THIOSULFATE (0.1N STANDARD SOLUTION)

1. SCOPE.

1.1 This method is used for the preparation of 0.1N standard solution of sodium thiosulfate.

2. APPARATUS.

2.1 Iodine titration flasks, 250 ml.

2.2 Storage bottle, amber-colored pyrex glass (or clear pyrex glms (or clear pyrex glass painted black).

2.3 Buret, 50 ml.

3. MATERIALS.

3.1 Sodium thiosulfate pentahydrate, reagent grade.

195/196

3.2 Hydrochloric acid, IN solution.

3.3 Sodium carbonate.

3.4. Potassium iodide, 10-percent solution (iodate-free).

3.5 Potassium bichromate, National Bureau of Standards Sample No. 136, dried for 2 hours at 100°C.

3.6 Starch indicator solution as specified in Method 701.1.

4. PROCEDURE.

4.1 Prepare the 0.1N solution of sodium thiosulfate as follows:

a. For each liter of solution desired dissolve 26 gm. of sodium sulfate pentahydrate and 0.1 gm. of sodium carbonate in sufficient freshly boiled and cooled distilIed water to make one liter.

b. A11ow the solution to stand for at least 24 hours before standardization and use.

4.2 Standardize the solution as follows:

Note. This procedure is essentially the method described in the Official Methods of Analysis of the Association of Official Agricultural Chemists (Seventh Edition), 1950, Method No. 39.36.

a. Dissolve 0.20 to 0.23 gm. of the potassium bichromate (weighed to within 0.2 reg.) in 60 ml. of distilled water.

b. Add 15 ml. of potassium iodide and 20 ml. of the 1N hydrochloric acid solution.

c. Stopper the flask, swirl the contents for a few seconds, and allow the flask to stand in the dark for 10 minutes.

d. Titrate the contents of the flask with the sodium thiosulfate solution (swirling continuously) until a light greenish-brown color appears.

e. Add 5 ml. of the starch indicator solution, and continue the titration until the deep blue starch-iodide color changes to a pale bluish green.

4.3 Apply buret and temperature corrections, and calculate the normality of the sodium thiosulfate solution, using the following equation:

$$\text{Normality of sodium thiosulfate solution} = \frac{A}{0.04904B}$$

where:

A = potassium bichromate, gm.

B = sodium thiosulfate, ml.

Downloaded from http://www.everyspec.com

Downloaded from http://www.everyspec.com

METHOD 701.1
STARCH INDICATOR SOLUTION

1. MATERIALS.

1.1 Mercuric iodide, C.P. grade.

1.2 Soluble starch (suitable for iodometry): 2 gm.

1.3 Water, freshly distilled.

2. PROCEDURE.

2.1 Mix 2 gm. of the starch and several milligrams of the mercuric iodide (as a preservative) with a little distilled water. Add the mixture slowly to 500 ml. of boiling distilled water. Allow the liquid to boil for five minutes, then cool to room temperature.

Note. This solution should be stable for several weeks.

197/198

Downloaded from http://www.everyspec.com

Downloaded from http://www.everyspec.com

METHOD 702.1
METHYL RED INDICATOR SOLUTION

1. MATERIALS.

1.1 Methyl red, reagent grade: 0.1 gm.

1.2 Ethyl alcohol, 95-percent (MIL-E-463, Grade 1): 100 ml.

2. PROCEDURE.

2.1 Dissolve the methyl red in the ethyl alcohol, while stirring.

Note. This solution is quite stable and should be effective for several months. For the average titration involving 200 to 400 ml. of solution, 3 to 4 drops of this indicator are used

199/200

Downloaded from http://www.everyspec.com

Downloaded from http://www.everyspec.com

METHOD 703.1
PHENOLPHTHALEIN INDICATOR SOLUTION

1. MATERIALS.

1.1 Phenolphthalein, reagent grade, 0.1 gm.

1.2 Ethyl alcohol, 95-percent (MIL-E-463, grade 1): 100 ml.

1.3 Sodium hydroxide, 0.5N solution.

1.4 Hydrochloric acid, 0.5N solution.

2. PROCEDURE.

2.1 Dissolve the phenolphthalein in the ethyl alcohol.

2.2 Neutralize the acidity of the alcohol by adding 0.5N solution of sodium hydroxide, drop by drop, until a faint pink color develops, then adding 0.5N hydrochloric acid solution until the color is just discharged.

Note. If protected from contact with carbon dioxide, this solution will keep indefinitely.

201/202

Downloaded from http://www.everyspec.com

Downloaded from http://www.everyspec.com

METHOD 704.1
METHYL ORANGE INDICATOR SOLUTION

1. MATERIALS.

1.1 Methyl orange, reagent grade: 0.1 gm.

1.2 Water, freshly distilled: 100 ml.

2. PROCEDURE.

2.1 Dissolve the methyl orange in the distilled water.

Note. This solution should be stable for several months.

203/204

Downloaded from http://www.everyspec.com

Downloaded from http://www.everyspec.com

METHOD 705.1
BARIUM DIPHENYLAMINE SULFONATE INDICATOR SOLUTION

1. MATERIALS.

1.1 Barium diphenylamine sulfonate, reagent grade: 0.32 gm.

1.2 Water, freshly distilled: 100 ml.

2. PROCEDURE.

2.1 Dissolve the barium diphenylamine sulfonate in the distilled water.

205/206

Downloaded from http://www.everyspec.com

Downloaded from http://www.everyspec.com

METHOD 706.1
SODIUM DIPHENYLBENZIDINE SULFONATE INDICATOR SOLUTION

1. MATERIALS.

1.1 Sodium diphenylbenzidine sulfonate reagent grade: 0.50 gm.

1.2 Water, freshly distilled: 100 ml.

2. PROCEDURE.

2.1 Dissolve the sodium diphenylbenzidine sulfonate in the distilled water.

Downloaded from http://www.everyspec.com

Downloaded from http://www.everyspec.com

METHOD 707.1
AMMONIUM THIOCYANATE INDICATOR SOLUTION (20-PERCENT)

1. MATERIALS.

1.1 Ammonium thiocyanate, reagent grade: 20 gm.

1.2 Water, freshly distilled: 100 ml.

2. PROCEDURE.

2.1 Dissolve the ammonium thiocyanate in the distilled water.

Caution: **This solution must be colorless for use as an indicator.**

"Copies of specifications, standards, drawings, and publications required by contractors in connection with specific procurement functions may be obtained from the procuring agency or as directed by the contracting officer.

Copies of this standard for military use may be obtained as indicated in the forward to the Department of Defense Index of specifications and standards.

Copies of this standard for other than official use by individuals, firms, and contractors may be obtained from the Superintendent of Documents, U.S. Government Printing Office, Washington 25, D. C.

Both the title and the identifying symbol number should be stipulated when requesting copies of Military Standard.

Notice. When Government drawings, specifications, or other data are used for any purpose other than in connection with a definitely related Government procurement operation, the United States Government thereby incurs no responsibility nor any obligation whatsoever; and the fact that the Government may have formulated, furnished, or in any way supplied the said drawings, specifications, or other data is not to be regarded by implication or otherwise as in any manner licensing the holder or any other person or corporation or conveying any rights or permission to manufacture, use, or sell any patented invention that may in ally way be related thereto.

Other custodians:
Army—ORD
Army—WEP
Air Force-ASD

Preparing activity:
Army-ORD

209/210

Downloaded from http://www.everyspec.com