Downloaded from http://www.everyspec.com

MIL-STD-461A
1 August 1968
SUPERSEDING
(SEE FORWARD)

MILITARY STANDARD

ELECTROMAGNETIC INTERFERENCE CHARACTERISTICS REQUIREMENTS FOR EQUIPMENT

1

A-1

111-00-385

THIS DOCUMENT CONTAINS 80 PAGES.

2404

Downloaded from http://www.everyspec.com

DEPARTMENT OF DEFENSE

WASHINGTON, D. C. 20360

Electromagnetic Interference
Characteristics Requirements for Equipment

MIL-STD-461

1. This standard is mandatory for use by all Departments and Agencies of the Department of Defense.

2. Recommended corrections, additions, or deletions should be addressed to Commander, Naval Electronic Systems Command, Department of the Navy, Washington, D.C. 20360, with carbon copies to the departmental custodians.

Downloaded from http://www.everyspec.com

FOREWORD

In the past, the Army, Navy, and Air Force have used a number of general-purpose interference specifications and standards for equipments and subsystems used with shipboard, submarine, aerospace, and ground systems. In general, these specifications were similar but many of the individual requirements and test methods were stated differently and had minor variations. Contractors had the problem of analyzing each of these differences to determine whether requirements were, in fact, the same or different. Since thousands of manufacturers did this every time a specification was changed, it became very costly and time consuming.

The purpose of this standard is to provide military interference control requirements in a coordinated document.

The standards and specifications superseded by this document are MIL-STD-461 and as follows:

Coordinated Documents

MIL-I-6181
MIL-S-10379
MIL-S-12348
MIL-I-43121

Single Service Documents

Army	Navy	Air Force
MIL-E-55301(E)	MIL-I-16910	MIL-STD-826
	MIL-I-17623	MIL-I-26600
	NFEC-SPEC-50Y	

Downloaded from http://www.everyspec.com

CONTENTS

			Page
Paragraph	1	SCOPE	1
	1.1	Scope	1
	1.2	Units	1
	2	REFERENCED DOCUMENTS	1
	3	DEFINITIONS	2
	4	GENERAL REQUIREMENTS	2
	4.1	Application of Standard	2
	4.1.1	Equipment	2
	4.1.2	Government Furnished Equipment	2
	4.1.3	Commercial Off-the-shelf Equipment	2
	4.1.4	Reprocurements of equipments designed to superseded documents	2
	4.1.5	Other EMI Requirements	2
	4.1.6	Short-Duration Interference	3
	4.2	Interference Control Plan	3
	4.2.1	Contents	3
	4.2.1.1	Management Controls	6
	4.2.1.2	Frequency Management	6
	4.2.1.3	EMI Mechanical Design	6
	4.2.1.4	Electrical/Electronic Wiring Design	6
	4.2.1.5	Electrical/Electronic Circuit Design	6
	4.2.1.6	Analysis	7
	4.2.1.7	R&D Testing	7
	4.3	EMI/EMC Test Plan	7
	4.4	Test Report Format	7
	4.4.1	Format	7
	4.4.1.1	Cover Page	7
	4.4.1.2	Appendices	7
	4.4.2	Content	8
	4.4.3	Interservice Data Exchange Program	8
	5	MEASURING EQUIPMENT	8
	5.1	Electromagnetic Interference Instruments	8
	5.2	Test Antennas	8
	5.2.1	30 Hz to 30 kHz	8
	5.2.2	14 kHz to 25 MHz	9
	5.2.3	20 to 200 MHz	9
	5.2.4	200 to 1000 MHz	10
	5.2.5	One to 10 GHz	10
	5.2.6	200 MHz to 40 GHz	10
	5.2.7	Determination of antenna factors	10
	5.2.7.1	Setup	10
	5.2.7.2	Measurement	10
	5.2.7.3	Equations for computing antenna factor (AF)	11
	5.3	Current Probes	11
	5.4	Impulse Generators	11
	5.5	Signal Sources	12
	5.5.1	Susceptibility Signals	12
	5.6	Ten Microfarad Capacitors	12
	5.7	Calibration	12
	5.8	Accuracy of Measurements	13
	6	LIMITS	13
	6.1	Limits for CE01, CE02, and CE05	13
	6.2	Limits for CE03, CE04 and CE05	13
	6.3	Limits for CE06	13
	6.3.1	Receivers	13
	6.3.2	Transmitters (Key-up mode)	13
	6.4	Limit for CS01	13

Downloaded from http://www.everyspec.com

CONTENTS

			Page
Paragraph	6.5	Limit for CS02	13
	6.6	Limits for CS03	13
	6.7	Limits for CS04 and CS08	14
	6.8	Limit for CS05	14
	6.9	Limit for CS06	14
	6.10.1	Test 1	14
	6.10.2	Test 2	14
	6.11	Limit for RE01	14
	6.12	Limits for RE02	14
	6.13	Limit for RE03	14
	6.14	Limit for (T) RE04	14
	6.15	Limit for RE05	14
	6.16	Limit for RE06	14
	6.17	Limit for RS01	14
	6.18	Limit for RS02	15
	6.19	Limit for RS03 and (T) RS04	15
	7	NOTES	15
	7.1	Intrrnational Standardization Agreements	15

FIGURES

Figure 1A	Loop Used for Radiating Magnetic Fields	16
Figure 1B	Magnetic Field Emission Loop Conversion Factor	17
Figure 2A	Antenna Factor for Biconical Antenna	18
Figure 2B	Antenna Assembly (Drawing ES-F-201286, Sheet 1)	19
Figure 2B-1	Brass Nipple	20
Figure 2B-2	Phenolic Mount	21
Figure 2C	Outrigger assembly	22
Figure 2C-1	Cap	23
Figure 2C-2	Base	24
Figure 2C-3	Elbow	25
Figure 2C-4	Arm	26
Figure 2C-5	Arm	27
Figure 2C-6	Arm	28
Figure 3	Antenna Factor for Lag Spiral Antenna	29
Figure 4	Antenna Factor for Lag Spiral Antenna	30
Figure 5	Antenna Factor for Cavity Backed Flat Spiral Antenna (200 to 1000 MHz)	31
Figure 6	Axial Ratio, Cavity Backed Spiral Antenna (1 to 12 GHz)	32
Figure 7	VSWR, Cavity Backed Spiral Antenna (1 to 12 GHz)	33
Figure 8	Effective Area and Gain Cavity Backed Spiral Antenna (1 to 12 GHz)	34
Figure 9	Antenna Factor for Cavity Backed Flat Spiral Antenna (1 to 12 GHz)	35
Figure 10	VSWR, Cavity Backed Flat Spiral Antenna Mounted in a 3 Foot Dish (1 to 12 GHz)	36
Figure 11	3 dB Beamwidth, Cavity Backed Spiral Antenna Mounted in a 3 Foot Dish (1 to 12 GHz)	37
Digure 12	Limits for CE01, CE02 and CE05 Broadband Emissions	38
Figure 13	Limit for CE01, CE02, and CE05 Narrowband Emissions	39
Figure 14	Limits for CE03, CE04 and CE05, Broadband Emissions	40
Figure 15	Limits for CE03, CE04 and CE05, Narrowband Emissions	41
Figure 16	Harmonic-Spurious Emission Limits for CE06 and RE03	42
Figure 17	Limits for CS01	43
Figure 18	Limits for CS04 and CS08	44
Figure 19	Limit for CS06	45
Figure 20	Limits for RE01 and RS01	46
Figure 21	Limit for RE02 Narrowband Emissions	47
Figure 22	Limit for RE02 and RE05 Broadband Emissions	48
Figure 23	Limit for (T) RE04	49
Figure 24	Limits for RE06	50

2408

Downloaded from http://www.everyspec.com

TABLES

		Page
Table I	Classes of Equipment	4
Table II	Test Requirements Applicable to Equipment Classes	4
Table III	Approved Measuring Equipment (to be issued in a future revision)	9
Table IV	Calculated Beamwidth and Gain, Cavity Backed Spiral Antenna Mounted in a 3 Foot Dish (1 to 12 GHz(	12

APPENDIX

Paragraph 10	GENERAL	51
20	TEST REQUIREMENTS	51
30	LIMITS	51
	Limits Figures A-1 through A-4	
40	TABLE OF REQUIREMENTS APPLICABLE TO SUPERSEDED DOCUMENTS	51
	TABLE AI - MIL-E-55301	52
	TALBE A-II - MIL-I-11748	53
	TABLE A-III - MIL-S-10379	55
	TABLE A-IV - MIL-I-16910C	56
	TABLE A-V - MIL-I-17623A and MIL-I-43121A	57
	TABLE A-VI - MIL-I-6181 (future amendment)	58
	TABLE A-VII - MIL-STD-826 (future amendment)	59
	Notes to Tables	60
50	ADDITIONAL TEST METHODS	67
	Method A-CE1 - Conducted Interference, Powerline - .150 to 65 MHz, LISN Method	68
	Method A-CE2 - Conducted Emission, Power Source Leads - 1.50 to 65 MHz, Coupling Block Method	72
	Method A-CS1 - Conducted Susceptibility, Powerline - .150 to 65 MHz, LISN Method	74

Downloaded from http://www.everyspec.com

ELECTROMAGNETIC INTERFERENCE CHARACTERISTICS

REQUIREMENTS FOR EQUIPMENT

1. SCOPE

1.1 Scope. - This standard covers the requirements and test limits for the measurement and determination of the electromagnetic interference characteristics (emission and susceptibility) of electronic, electrical and electromechanical equipment. The requirements shall be applied for general or multi-Service procurements and single service procurements, as specified in the individual equipment specification, or the contract or order.

1.1.1 The requirements specified in this standard are established to:

(a) Insure that interference control is considered and incorporated into the design of equipment.
(b) Enable compatible operation of the equipment in a complex electromagnetic environment.

1.1.2 This standard shall be used in conjunction with MIL-STD-463 and MIL-STD-462.

1.2 Units. - This standard requires use of the International System of Units as specified in MIL-STD-463.

2. REFERENCED DOCUMENTS

2.1 The following documents of the issue in effect on date of invitation for bids or request for proposal, form a part of this standard to the extent specified herein:

SPECIFICATIONS

MILITARY
MIL-C-45662 - Calibration of Standards.

STANDARDS

MILITARY
MIL-STD-462 - Electromagnetic Interference Characteristics, Measurement of
MIL-STD-463 - Definitions and Systems of Units, Electromagnetic Interference Technology.
MIL-STD-633 - Mobile Electric Power Engine Generator Set Family.
MIL-STD-831 - Test Reports, Preparation of

DRAWINGS

MILITARY
62J4040 - Antenna, Conical Logarithmic Spiral, 200 to 1000 MHz
62J4041 - Antenna, Conical Logarithmic Spiral, 1 to 10 GHz
ES-DL-201090 and Drawings thereto - Antenna, Microwave, 12 to 40 GHz, Detail Assembly.

Copies of these drawings may be obtained from the contracting officer or from the following activities:

62J4040 and 62J4041:
Hq. USAF Logistics Command
Engineering Data Center (SGLDL)
Wright Patterson Air Force Base, Ohio 45433

ES-DL-201090:
Commanding General
USAECOM
Attn: AMSEL-TD-TE-C
Fort Monmouth, N.J. 07703

Downloaded from http://www.everyspec.com

2.2 Other Publications. - The documents referenced below form a part of this standard to the extent specified herein. Unless otherwise specified in the individual equipment specification, the issues of these documents in effect on date-of-invitation for bids or requests for proposals shall apply.

SOCIETY OF AUTOMOTIVE ENGINEERS, INC. (SAE)
SAE-ARP-936-Ten microfarad Capacitor
SAE-ARP-958-Measurement of Antenna Factors
SAE-J551-Measurement of Vehicle Radio Interference (30 to 400 MC)

(Copies may be obtained from the Society of Automotive Engineers, Inc., 485 Lexington Avenue, New York, New York 10017).

3. DEFINITIONS The terms used in this standard are defined in MIL-STD-463.

4. GENERAL REQUIREMENTS

4.1 Application of Standard. - The requirements of this standard shall be applied to electronic, electrical and electromechanical equipment as indicated hereinafter:

4.1.1 Equipment. - The requirements of this standard shall be applied to units or equipments that are intended to operate as individual items. Individual equipment classes are defined in Table I. Application of each test requirement for the particular equipment class is shown in Table II.

4.1.2 Government Furnished Equipment. - Equipment furnished by the Government to a contractor may, unless the test data is furnished by the Government, require testing by the contractor for conformance to the equipment item class and limit requirements. Application of suppression measures to meet the requirements shall be detailed in the control plan.

4.1.3 Commercial Off-the-Shelf Equipment. -

4.1.3.1 When commercial off-the-shelf equipment is selected by the contractor all applicable tests required by this standard shall be performed and the test data submitted to the procuring activity to determine the EMI/EMC suitability in the end-item configuration. The EMI/EMC suitability shall be covered in the control plan (see 4.2).

4.1.3.2 When C-E equipment certified to FAA Technical Standard Orders (Part 5.1.4 (a) and (b) are used with, or become part of any military equipment configuration, the requirements in 4.1.3.1 apply.

4.1.3.3 Electrical and electromechanical equipment, not intended for use in tactical or critical military areas, are exempt for meeting the requirements of this standard unless specifically required by the procuring activity. When this equipment is procured for use in an unknown installation or for use in both tactical and nontactical installations the requirements stated in 4.1.3.1 shall apply.

4.1.4 Reprocurements of equipments designed to superseded documents. - Production type equipments (all classes) designed prior to the effective date of this standard and certified to superseded specifications or standards shall meet the appropriate requirements specified in Appendix A of this standard.

4.1.5 Other EMI Requirements. -

4.1.5.1 If an equipment has met other emission and susceptibility requirements the test procedures and report may be submitted for evaluation by the procuring activity as evidence of meeting equivalent portions of this standard.

4.1.5.2 All equipments, other than Class I equipment, produced by a manufacturer, which are identical to those previously produced by the same manufacturer, tested in accordance with this standard and found satisfactory shall require minimal testing, as indicated in the approved test plan, to ascertain conformance with this standard. A copy of the previous test report shall be forwarded with the new test report for comparison and evaluation.

Downloaded from http://www.everyspec.com

4.1.6 Short-Duration Interference. - Short duration interference is not exempt from the requirements of this standard, unless specifically indicated in the individual equipment specification. The short-duration interference requirements given in Appendix A shall be used for reprocurements of equipments designed to superseded documents.

4.2 Interference Control Plan. - The interference control plan shall be a detailed plan outlining the interference control or reduction program, the engineering design procedures and proposed techniques that will be used to determine conformance with the requirements of this standard and that will enable the equipment to perform its operational function without interference from its parts and subassemblies. Approval of the control plan and compliance thereto does not relieve the contractor of the responsibility of meeting the applicable requirements of this standard. Technically justifiable deviations which are being, or are to be formally processed through contractual channels may be included in the control plan.

4.2.1 Contents. - The control plan shall contain but not be limited to the following major categories:

Table I - Classes of Equipment

Class No.	Description
I	Communication-Electronic (C-E) Equipment Any item, including subassemblies and parts, serving functionally in electromagnetically generating, transmitting, conveying, acquiring, receiving, storing, processing or utilizing information in the broadest sense. Sub classes are:
IA	Receivers Using Antennas
IB	Transmitters Using Antennas
IC	Non-Antenna C-E Equipment (such as counters, oscilloscopes, signal generators, rf and audio test equipment, computers, power supplies, digital equipment, electrically operated cameras and projectors, wire terminal image interpretation facilities, photographic processing equipment and other electronic devices working in conjunction with classes IA and IB).
ID	Electrical and electronic equipment and instruments which would affect mission success or safety if degraded or malfunctioned by internally generated interference or susceptibility to external fields and voltages such as auto-pilots, infrared devices, flight instruments, auto-compasses and electronic engine control devices).
II	Non-Communication Equipment, Specific subclasses are:
IIA	Non Communication-Electronic Equipment - Equipment in which rf energy is intentionally generated for other than information or control purposes. Examples are ultrasonic equipment, medical diathermy equipment, induction heaters, rf stabilized arcwelders rf power supplies and uninterruptible power units (both rotary and solid state).
IIB	Electrical Equipment - Some examples are electric motors, handtools, office and kitchen equipment, laundry and repair shop equipment, and lithographic processing equipment.
IIC	Accessories for Vehicles and Engines - Electrically and mechanically driven and engine electrical accessories such as gauges, fuel pumps, regulators, windshield wipers, turret motors, magnetos and generators, when tested off of the vehicle or engine. Applicable only to accessories for use on items of classes IIIA and IIIB.
III	Vehicles, Engine-Driven Equipment

2612

Downloaded from http://www.everyspec.com

Table I - Classes of Equipment —Continued

Class No.	Description
IIIA	Tactical Vehicles. - Included are: armored and tracked vehicles, off-the-road cargo and personnel carriers, assault and landing craft, amphibious vehicles, patrol boats, mobile railway and maintenance-of-way equipment, and all other vehicles intended for installation of tactical C-E equipment.
IIIB	Engine Generators. - Those supplying power to, or closely associated with C-E-equipment.
IIIC	Special Purpose Vehicles and Engine-Driven Equipment - Those intended for use in critical communication areas such as air-fields, missile sites, ships forward areas, or in support of tactical operations. Examples are fire engines, aircraft service vehicles, pumps, blowers, and bulldozers and other construction equipment, harbor tugs, floating repair shops, self-propelled barges, and fork-lift trucks.
IIID	Administrative Vehicles. - Those of basically civilian character, not intended for use in tactical areas or in critical areas covered by class IIIC, and not intended for installation of communication equipment. Examples are sedans, and other material handling equipment, whether engine-driven or electrically driven.
IV	Overhead Power Lines

Table II - Test Requirements Applicable to Equipment Classes (Note 1)

	Equipment Class												Description of Test Method	Notes
	IA	IB	IC	ID	IIA (8)	IIB	IIC	IIIA	IIIB	IIIC	IIID (13)	IV		
CE01	Y	Y	Y	Y	Y	N	N	N	N	N	N	N	30 Hz to 20 kHz, Power Leads	(9)
CE02	Y	Y	Y	Y	Y	N	N	N	N	N	N	N	0.03 to 20 kHz, Control and Signal Leads	
CE03	Y	Y	Y	Y	Y	Y	Y	Y	Y	N	N	N	0.02 to 50 MHz, Power Leads	(2, 6, 11)
CE04	Y	Y	Y	Y	Y	N	N	N	N	N	N	N	0.02 to 50 MHz, Control and Signal Leads	
CE05	Y	Y	Y	Y	Y	Y	N	N	N	N	N	N	30 Hz to 50 MHz, Inverse Filter Method	(4)
CE06	Y	Y	N	N	N	N	N	N	N	N	N	N	10 kHz to 12.4 GHz, Antenna Terminal	
CS01	Y	Y	Y	Y	N	N	N	N	N	N	N	N	0.03 to 50 kHz, Power Leads	
CS02	Y	Y	Y	Y	N	N	N	N	N	N	N	N	0.05 to 400 MHz, Power Leads	
CS03	Y	N	Y	N	N	N	N	N	N	N	N	N	30 Hz to 10 GHz, Intermodulation	
CS04	Y	N	Y	N	N	N	N	N	N	N	N	N	30 Hz to 10 GHz, Rej. of Undes, Sig. (2-Sig Gen Method)	(7)
CS05	Y	N	Y	N	N	N	N	N	N	N	N	N	30 Hz to 10 GHz, Cross-Modulation	
CS06	Y	Y	Y	Y	N	N	N	N	N	N	N	N	Spike, Power Leads	
(T) CS07	Y	N	Y	N	N	N	N	N	N	N	N	N	Squelch Circuits	
CS08	Y	N	Y	N	N	N	N	N	N	N	N	N	30 Hz to 10 GHz, Rej. of Undes Sig. (1-Sig Gen Method)	(7)
RE01	Y	Y	Y	N	Y	N	N	N	N	N	N	N	0.03 to 30 kHz, Magnetic Field	(5)
RE02	Y	Y	Y	Y	Y	Y	Y	N	N	N	N	N	14 kHz to 10 GHz, Electric Field	(12)
RE03	N	Y	N	N	N	N	N	N	N	N	N	N	10 kHz to 40 GHz, Spurious and Harmonics, Radiated Technique	(3)
(T) RE04	Y	Y	Y	N	Y	N	N	N	N	N	N	N	0.02 to 50 kHz, Magnetic Field	(5)
RE05	N	N	N	N	N	N	N	Y	Y	Y	N	N	150 kHz to 1 GHz Vehicles and Engine Driven Equipment	(10, 4)
RE06	N	N	N	N	N	N	N	N	N	N	N	Y	Overhead Power Line Test	

2413

Downloaded from http://www.everyspec.com

Table II - Test Requirements Applicable to Equipment Classes (Note 1)—Continued

	Equipment Class												Description of Test Method	Notes
	IA	IB	IC	ID	IIA (8)	IIB	IIC	IIIA	IIIB	IIIC	IID (13)	IV		
RS01	Y	Y	Y	Y	N	N	N	N	N	N	N	N	0.03 to 30 kHz, Magnetic Field	(5)
RS02	Y	Y	Y	Y	N	N	N	N	N	N	N	N	Magnetic Induction Field	
RS03	Y	Y	Y	Y	N	N	N	N	N	N	N	N	14 kHz to 10 GHz, Electric Field	
(T) RS04	Y	Y	Y	Y	N	N	N	N	N	N	N	N	14 kHz to 30 MHz	

Y = Test shall be performed as described in MIL-STD-462 or the approved test plan.
N = Test does not have to be performed, unless required by the test plan or procuring activity.

Notes for Table II:

(1) The test methods in MIL-STD-462 are designated by a series of numbers as shown hereinafter:

C = Conducted
R = Radiated
E = Emission
S = Susceptibility
"--" = Numerical order of test from 01 to 99.
T = New or Modified Test Procedure included for Trial use, or as required by the procuring activity.

(2) For Class IIIB items exceeding 600 volts AC or DC this test is not mandatory unless required by the procuring activity.

(3) RE03 shall be performed when the operating frequency of the test sample is greater than 1.24 GHz, when the average power of the test sample is greater than 5 kW, or when the test sample's antenna is an integral part of the transmitter and cannot be replaced by a suitable dummy load.

(4) Test method (CE05) may be submitted to the command or agency concerned for approval in the test plan, in lieu of CE01, CE02, CE03, or CE04 when the signal to be measured is generated by a single shot event or at repetition rates of less than 5 pps.

(5) These tests (RE01),(T) RE04 and RS01) shall be performed on equipment operating at frequencies up to 30 MHz. Equipment operating at higher frequencies are exempt from testing.

(6) For classes IIB, IIC, IIIA and IIIB perform the test over the frequency range of 150 kHz to 50 MHz. For class IIIB only, remove the 10 microfarad feed-through capacitor.

(7) Perform either CS04 or CS08, as approved in the test plan.

(8) Shall conform to F.C.C. Regulations, Part 15 or Part 18 as applicable. In addition, the applicable requirements of this standard shall be met for ultrasonic equipment, rf power supplies and uninterruptible power units (both rotary and solid state).

(9) Class IIA shall be tested from 14 kHz to 20 kHz with this test procedure (CE01). However, when required by the individual equipment specification, the test shall be performed from 1 kHz to 20 kHz.

(10) For class IIIC items, this test is not required above 400 MHz.

(11) Electric hand tools (which fall under class IIB) shall be tested from 150 kHz to 30 MHz.

2414

Downloaded from http://www.everyspec.com

(12) Class IIB items, except electric hand tools, shall be tested from 150 kHz to 400 MHz. Electric hand tools shall be tested from 150 kHz to 30 MHz. Class IIC items shall be tested from 150 kHz to 1000 MHz.

(13) Class IIID items shall comply with the requirements of SAE J551.

(14) For class IIIB items meeting the requirements of MIL-STD-633 and having power outputs exceeding 300 kVa, this test is not mandatory unless required by the procuring activity or project manager. For other class IIIB items exceeding 240 kVa, this test is not mandatory unless required by the procuring activity or project manager.

4.2.1.1 Management Controls. - Specific organizational responsibilities, lines of authority and control, and the implementation plan, including milestones to be used by the contractor shall be included in the interference control plan. The section shall also include a definition of responsibility for associate contractor equipments, government furnished equipments and sub-contractor vendor items as required by 4.1.2 and 4.1.3.

4.2.1.2 Frequency Management. - Frequency management shall be employed and shall consist of minimizing emission spectrum and receiver bandwidths and controlling oscillator frequencies, pulse rise times, harmonics, sidebands and the duty cycle.

4.2.1.3 EMI Mechanical Design. - The materials and construction methods selected for design shall provide an inherent attenuation to electromagnetic emanations and susceptibilities which will enable the equipment to meet the requirements of this standard without compomising other mechanical requirements of the individual equipment specification. The control plan shall describe the material and construction used and criteria for this selection. Specific data to be included are as follows:

(a) Type of metals, casting, finishes and hardware employed in the design.
(b) Type of construction, such as compartmentizing, filter mounting and isolation of other parts, dimensions of access ports, windows and ventilation ports, type and characteristics of filtering used on openings including such items as ventilation ports, access hatches, windows, meter faces and control shafts, and type and attenuation characteristics of rf gaskets used on all internal and external mating surfaces.

4.2.1.4 Electrical/Electronic Wiring Design. - The control plan shall include a description of the proposed electrical/electronic wiring designs. Cables shall be separated and routed to minimize electromagnectic interference and susceptibility.

4.2.1.5 Electrical/Electronic Circuit Design. - This section shall fully describe the EMI suppression techniques which will be applied to all parts and circuitry whether capable of generating undesirable emanations or suspected of being susceptible to the fields and voltage levels specified in this standard. The specifically required design data shall include but not be limited to the following:

(a) Choice of parts and circuitry, the criteria for use of standard parts and circuitry, and bonding and grounding techniques.
(b) Justification of selected filter characteristics including type and attenuation, technical reasons for selecting types of filters (for example, absorptive vs. non-absorptive filters) and specific circuit applications.
(c) Part location and separation based on orientation of EM fields for reduction of emissions, susceptibility or both.
(d) Discussion indicating valid technical reasons for selection of pulse shape. The pulse shapes to be considered shall include, but are not limited to the following:

(1) Binomial
(2) Raised Cosine
(3) Triangular
(4) Rectangular

2415

Downloaded from http://www.everyspec.com

4.2.1.6 Analysis. - Prediction or analysis techniques employed to determine adequacy of contractor's conclusions shall be included. Specific aspects of the mechanical, electrical and electronic design to be included are as follows:

(a) Adequacy of mechanical construction, and an analysis of the shielding afforded by the proposed designs over the specified frequency range and energy level.
(b) Complete frequency matrix of all frequencies associated with receivers and transmitters, expected spurious responses of receivers at input signal levels and frequency range(s) specified in this standard, and expected spurious outputs of items such as transmitters, local oscillators and frequency synthesizers.
(c) Worst case analysis (Fourier) of multivibrators, switching (single and repetitive) and logic circuits, clock signals and strobe signals.
(d) Analysis of circuitry, subassemblies and total equipment, including cabling and loads for:

(1) The prediction of susceptibility to internally and externally generated fields and voltages, whether below or above the limits imposed by this standard.
(2) The prediction of emissions, whether below or above the limits imposed by this standard.

4.2.1.7 R&D Testing. - Discussions of proposed testing program during develpment construction stages is required. Listing of instrumentation facilities and responsible EMI/EMC design engineering personnel shall be included in the control plan.

4.3. EMI/EMC Test Plan. - The test plan shall detail the means of implementation and application of the test procedures to be performed to verify compliance with the applicable EMI/EMC, requirements of this standard. Approval of the test plan shall precede the start of formal testing. The test plan shall include but need not be limited to the following:

(a) Nomenclature, serial numbers and general characteristics of test equipment(for example, transfer impedance of current probes and effective length of antennas).
(b) Methods and dates of last calibration of interference measuring equipment and calculations to show expected accuracy of each.
(c) Dummy loads, filters, dummy antennas, signal samplers, and similar items to be used an their description (for example, VSWR, isolation and loss) in the frequency range of interest. In addition, a tabular or graphical plot of the complex impedance at selected test frequencies of all reactive loads used shall be included.
(d) Readout and detector functions to be used in measuring equipment, where applicable.
(e) Nomenclature, description and modes of operation of the test sample.
(f) Control settings, monitored points and sequence of operation of test sample during the tests.
(g) Description and rf ambient profile of test site (open space or shielded enclosure).
(h) Detailed step-by-step test procedures and test setups, with maximum use of photographs, drawings and diagrams.
(i) Test frequencies based on the frequency matrix developed in the control plan, and modulations, and computations to indicate frequencies at which extraneous outputs, susceptibilities and intermodulation products may be expected.
(j) Expected overall accuracy of measurements.
(k) Personnel required, both designated Government representatives and the contractor.
(l) Considerations and regulations regarding the operation of test sample and measuring equipment in open areas (for example, FFC or FAA regulation).

4.4. Test Report Format

4.4.1 Format. - The format of the test report shall be as specified in MIL-STD-831 with the modifications given hereinafter:

4.4.1.1 Cover Page. - A cover page is required.

4.4.1.2 Appendices. - A separate appendiz shall be utilized for each test required by this standard. Each appendix shall include the applicable test procedure, data sheets, graphs, illustrations and photographs. The log sheets shall be included in a separate appendix which will be last. Definitions of specialized terms or word usage shall be included in another appendix.

2416

Downloaded from http://www.everyspec.com

4.4.2 Content. - The test report shall contain the factual data given hereinafter in accordance with the formal requirements of this standard and MIL-STD-831. If technical support data required for the interference test report is published in other documents required by the contract or order, it may be included in the interference report by reference. The report shall include the data required hereinafter. However, if these data are contained in the approved test plan, the test plan shall be included as an appendix.

(a) Nomenclatures of interference measuring equipment.
(b) Serial numbers of interference measuring equipment.
(c) Date of last calibration of interference measuring equipment.
(d) Scanning speed used to drive interference measuring equipment.
(e) Descriptions of procedures used (methods of loading and triggering and operation and control settings for test sample).
(f) Measured line voltages to test sample.
(g) Frequencies and methods of selection of frequencies if different from test plan.
(h) Type of emission or susceptibility measured and its source.
(i) Measured level of emission or susceptibility at each frequency and accuracy of measured values.
(j) Applicable limit at each frequency.
(k) Graphs showing items (i) and (j).
(l) Photographs or diagrams of the test setup and test sample with identification.
(m) Sample calculations showing how equivalent meter reading was calculated.
(n) Graphs showing x-y recording of equivalent meter reading.
(o) Description and size of shielded enclosure.
(p) Ground plane used, if test is not performed in shielded enclosures.
(q) Description of open space area, if used.
(r) Ambient rf profile of test site and ambient levels with each detector function energized and at each test frequency.
(s) Methods and criteria for monitoring for degradation of performance.
(t) Explanation of special terms and abbreviations used in the report.
(u) Settings of test samples control functions during the tests.
(v) Ground plane d.c. bonding resistance.
(w) Identification of suppression devices using schematics, performance data and drawings, except where these data are in other documents required of the contractor.
(x) Transfer impedance of current probes.

4.4.3 Interservice Data Exchange Program. - Reports submitted for the Interservice Data Exchange Program (IDEP) may conform to any applicable special requirement.

5. MEASURING EQUIPMENT. - This section describes the test equipment used in the test methods contained in MIL-STD-462. Apparatus used primarily for a particular test will be described under that test.

5.1 Electromagnetic Interference Instruments.

5.1.1 Table III will list measuring instruments characteristics for use with this standard. The approval criteria will be forthcoming in a future revision.

5.1.2 In the interim, those EMI instruments which are capable of measuring the parameters of this standard may be used, when approved by the procuring activity for the specific procurement in question.

5.2 Test Antennas. - The following antennas shall be used for performing radiated emission and susceptibility measurements. The antenna factors for each antenna shall be included in the test plan.

5.2.1 30 Hz to 30 kHz

(a) For magnetic field emission measurements a loop having the following specifications shall be used:
(1) Diameter = 13.3 cm.
(2) Number of turns = 36.
(3) Wire: 7-41 Litz.
(4) Loope shall be electrostatically shielded. The effective height of this loop is shown on Figure IA.

Downloaded from http://www.everyspec.com

(b) For radiating magnetic fields during susceptibility measurements, the loope shown on Figure 1B shall be used.

5.2.2 14 kHz to 25 MHz

(a) For emission measurements, a 41-inch rod antenna (electrical length = 0.5 meter) and an appropriate matching network, as required, with a square counterpoise whose side measure 60 cm shall be used. For measurements on electric hand tools this atenna shall be used up to 30 MHz.

(b) For radiating fields up to 1 Volt/meter, the 41-inch rod antenna and appropriate matching networks may be used. When fields greater than 1 Volt/meter are required, the antenna and general procedure shall be described in the test plan.

5.2.3 20 to 200 MHz

(a) Emission measurements in the frequency range of 25 to 200 MHz shall be performed using the biconical antenna constructed in accordance with Figures 2 B through 2 C-6. The maximum antenna factors for this biconical antenna and shown on figure 2 A. The measurement procedure for determining these antenna factors is specified in 5.2.7. The antenna factors shall be determined by the antenna manufacturer for each antenna and furnished with the atenna. These factors shall be used for calculating field strengths.

Table III - Measuring Equipment Characteristics

(The criteria will be forthcoming in a future revision).

2418
2845

Downloaded from http://www.everyspec.com

(b) Fields for susceptibility measurements shall be radiated from 20 to 200 MHz using the biconical antenna referenced in 5.2.3.a.

5.2.4 200 to 1000 MHz. - Emission and susceptibility measurements (except for harmonic and spurious outputs in the open field) shall be performed using the conical logarithmic spiral antenna constructed in accordance with Drawing 62J4040. The maximum values of the antenna factors for this antenna are shown on figure 3. The measurement procedure for determining these antenna factors is specified in 5.2.7. The antenna factors shall be determined by the antenna manufacturer for each antenna and furnished with the antenna. These factors shall be used for calculating field strengths.

5.2.5 1 to 10 GHz. - Emission and susceptibility measurements (except for harmonics and spurious outputs in the open field) shall be performed using the conical logarithmic spiral antenna constructed in accordance with Drawing 62J4041. The maximum values of the antenna factors for this antenna are shown on figure 4. The measurement procedure for determining these antenna factors is specified in 5.2.7. The antenna factors shall be determined by the antenna manufacturer for each antenna and furnished with the antenna. These factors shall be used for calculating field strengths.

5.2.6 200 MHz to 40 GHz. - Harmonic and spurious output measurements shall be performed with the following antennas:

(a) 200 to 1000 MHz - Cavity-Backed spiral antenna, AEL Model ASN-1232 or equal.
(b) 1 to 12 GHz —
  (1) Cavity-backed spiral antenna, AEL Model ASN-116 or equal.
  (2) AEL Model ASN-1242 or equal (cavity-backed spiral antenna mounted in a 3-foot dish).
(c) 12 to 40 GHz -- (Drawing ES-DL-201090)
  (1) 12 to 18 GHz — Horn antenna feeding an 18 inch diameter dish.
  (2) 18 to 26 GHz — Horn antenna feeding a 12 inch diameter dish.
  (3) 26 to 40 GHz — Horn antenna feeding a 12-inch diameter dish.

5.2.6.1 Characteristics and construction data for the above antennas are shown on Figures 5 through 11 and table IV, and Drawing ES-DL-201090, respectively. The antenna factors shown on Figures 8 and 9 are maximum factors for the antennas. The measurement procedure for determining these antenna factors is specified in 5.2.7. The antenna factors shall be determined by the antenna manufacturer for each antenna and furnished with the antenna. These factors shall be used for calculating field strengths.

5.2.7 Determination of Antenna Factors. - The antenna factors for the above antennas shall be determined utilizing the "Two Identical Antenna Gain" technique described herein. This technique is based upon the procedure contained in the SAE ARP-958 except that in the technique specified herein the antenna factor is determined for circularly polarized waves whereas in the SAE- ARP-958, it is determined for linearly polarized waves. (The antenna factor curves and antenna characteristics in the SAE ARP-958 for the conical logarithmic spiral antennas shall not be used when describing the characteristics of these antenna in the test plan.)

5.2.7.1 Setup. Equipment should be arranged as shown herein. The area in which the setup is situated should be clear of obstructions in order to achieve free-space conditions.

5.2.7.2 Measurement. At each frequency, using the receiver as reference device, the following operations, shall be performed.

(a) Adjust the signal generator output to obtain a receiver indication, being sure that the receiver is tuned for maximum response to the signal.
(b) Make fine adjustments of the antenna alignment for maximum indication and record the signal generator setting.
(c) Disconnect the receiver and signal generator cables from their respective antennas and connect the signal generator and the receiver to each other using the same cables and isolation pads with the addition of a 50 ohm coupling adapter.
(d) Reduce the signal generator output to obtain the same receiver output meter indication as obtained in step b. Record the signal generator setting.

Downloaded from http://www.everyspec.com

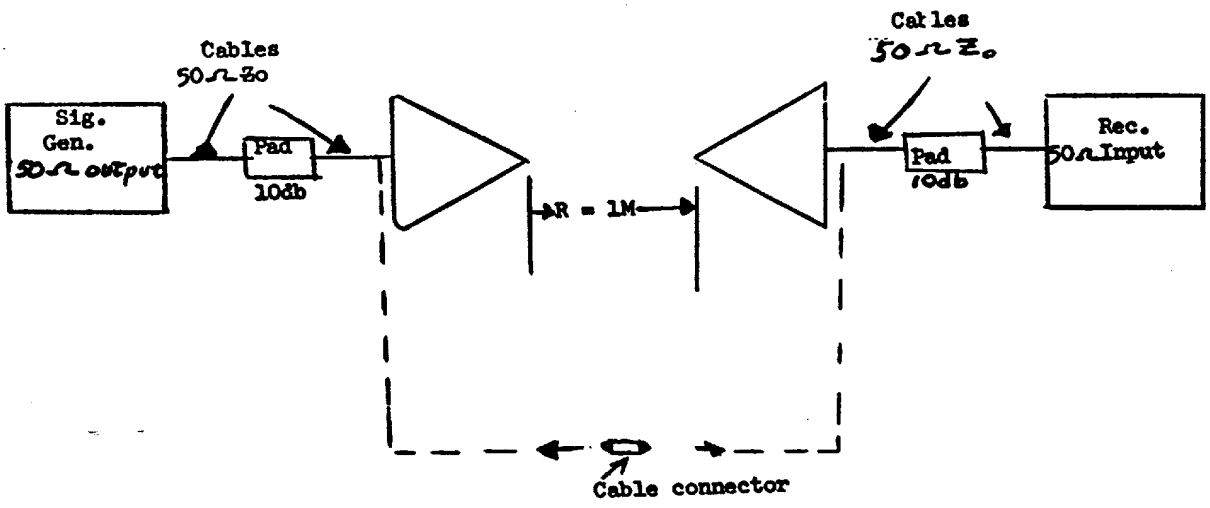

(e) Solve for gain utilizing the gain equation specified herein in which V_R and V_T are the signal generator readings recorded in step d and b respectively.

(f) Measurements shall be repeated at every 10 MHz from 20 MHz to 200 MHz and every 100 MHz from 200 MHz to 1 GHz. Above 1 GHz measurements shall be made every 1 GHz.

5.2.7.3 Equations for computing antenna factor (AF). - The antenna factor (AF) shall be calculated using the following equation:

$$AF = 20 \log \frac{9.76}{\lambda\sqrt{G}} \text{ dB}$$

$$G = \text{Gain} = \frac{4\pi R/\lambda}{V_T/V_R},$$

$$\lambda = \text{wavelength} = \frac{3 \times 10^6}{f} \text{ meters, and}$$

R = 1 meter (and 4 meters for the cavity backed spiral antenna).

5.3 Current Probes. - Any current probe capable of measuring to the limits specified herein may be used. The transfer impedance of the probe shall be included in the test plan and the test report.

5.4 Impulse Generators. - Impulse generators used shall conform to the following requirements:

(a) Calibrated in terms of output to a 50 -ohm load.
(b) Spectrum shall be flat ± 2 dB over its frequency range.
(c) Amplitude accuracy shall be ± 2 dB.

2420

Downloaded from http://www.everyspec.com

5.5 Signal Sources. - Any commercially available signal source, power amplifier and general purpose amplifier capable of supplying the necessary modulated and unmodulated power required to develop the susceptibility levels specified herein may be used, provided the following requirements are met:

(a) Frequency Accuracy. - Frequency accuracy shall be within ± 2 percent.
(b) Harmonic Content. - Harmonics and spurious outputs shall be not more than -30 DB as related to the fundamental power.

5.5.1 Susceptibility Signals. - Susceptibility signals shall have characteristics (for example, amplitude, type, degree, and frequency and waveform of modulation) which will have the maximum effect on the test sample.

5.6 Ten Microfarad Capacitors. - The 10 uf capacitors shall conform to the requirements of SAE-ARP 936. An insertion-loss or impedance curve shall be included in the test report.

5.7 Calibration

5.7.1 Measuring instruments and accessories used in determining compliance with the requirements of this standard shall be calibrated under an approved program in accordance with MIL-C-45662.

5.7.2 Calibration of measurement equipment and accessories, impulse generators, and other equipment shall be verified (spot checked) at any time upon request of witnessing officials or authorized representatives of the procuring activity.

Table IV-Calculated Beamwidth and Gain
Cavity Backed Spiral Antenna Mounted in a 3 Foot Dish (1 to 12 GHz)

Frequency GHz	Calculated Beamwidth (degrees)	Gain (dB)
1.0	23.0	11.0
1.5	15.2	14.5
2.0	11.4	17.0
2.5	9.2	19.0
3.0	7.6	20.5
3.5	6.5	22.0
4.0	5.8	23.0
4.5	5.0	24.0
5.0	4.6	25.0
5.5	4.2	26.0
6.0	3.8	26.5
6.5	3.5	27.2
7.0	3.3	28.0
7.5	3.0	28.5
8.0	2.8	29.0
8.5	2.7	29.8
9.0	2.6	30.0
9.5	2.4	30.5
10.0	2.3	31.0
10.5	2.2	31.5
11.0	2.1	32.0
11.5	2.0	32.5
12.0	2.0	33.0

Downloaded from http://www.everyspec.com

5.8 Accuracy of Measurements.- All measurements made in accordance with this standard shall have the following accuracies, unless otherwise specified in a particular test:

5.8.1 Frequency accuracy shall be ± 2 percent.

5.8.2 Amplitude accuracy shall be ± 2 dB.

6. LIMITS.- This section contains the limits applicable to the tests required by Section 4 of this standard. An equipment emitting both broadband and narrowband signals at the same frequency shall meet both requirements.

6.1 Limits for CE01, CE02 and CE05.- Electromagnetic emissions in the frequency range of 30 Hz to 20 kHz shall not appear on power leads, control leads, signal leads and interconnecting cables between parts, sources and loads of an equipment in excess of the values shown on Figures 12 and 13. Intentional transmissions of electrical energy by conduction on their intended leads, at their specified power levels, and within their necessary information bandwidths are exempt from the requirements of this standard.

6.2 Limits of CE03, CE04 and CE05.- Electromagnetic emissions in the frequency range of 20 kHz to 50 MHz shall not appear on power leads, control leads, signal leads and interconnecting cables between parts, sources and loads of an equipment, except hand tools, in excess of the values shown on Figures 14 and 15. Intentional transmissions of electrical energy by conduction on their intended leads, at their specified power levels, and within their necessary information bandwidths are exempt from the requirements of this standard. The limit for electric hand tools shall be as specifically indicated on Figure 14 (for Electric Hand Tools).

6.3 Limits for CE06.- No conducted emissions in the frequency range under test shall appear at the test sample's antenna terminals in excess of the following:

6.3.1 Receivers.-

(a) 34 dB V into a matched load for narrowband emissions.
(b) 40 dB V/MHz for broadband emissions.

6.3.2 Transmitters (Key-up-mode.).-

(a) 34 dB V for narrowband emissions.
(b) 40 dB V/MHz for broadband emissions.

6.3.3 Harmonic and all other spurious emissions shall have absolute peak powers not exceeding those shown on Figure 16. This limit does not apply within either the test sample's designed emission bandwidth or ± 5 percent of f_o, as defined on the test plan.

6.4 Limit for CS01.- The performance characteristics of class I equipment shall not be degraded beyond the tolerances given in the individual equipment specification or approved test plan, in the frequency range of 30 Hz to 50 kHz, when subjected to electromagnetic energy injected on its power leads equal to or less than the values shown on Figure 17.

6.4.1 The requirements for this test are also met if the required test voltages cannot be generated by 50-watts dissipated in a 0.5 ohm load.

6.5 Limit for CS02.- The performance characteristics of class I equipment shall not be degraded beyond the tolerances given in the individual equipment specification or approved test plan, in the frequency range of 50 kHz to 400 MHz, when subjected to 1 volt from a 50-ohm source applied to the equipment power input terminals (excluding power cable).

6.5.1 When a one watt source of 50-ohm impedance cannot develop the required voltage at the test sample power input terminals (excluding power cable) and the test sample is not susceptible to the output of this signal source, then the equipment may be considered non-susceptible.

6.6 Limits for CS03.- Intermodulation products from two signals shall not be present in the frequency range of 30 Hz to 10 GHz when:

(a) Signal generator one is set 66 dB above the level obtained to produce the standard reference output as specified in method CS03 of MIL-STD-462.
(b) Signal generator two is set 66 dB above the level obtained to produce the standard reference output as specified in method CS03 of MIL-STD-462.

2432

Downloaded from http://www.everyspec.com

6.7 Limits for CS04 and CS08. - The test sample shall not exhibit any undesired responses when subjected to the test signal shown on Figure 18.

6.8 Limit for CS05. - The test sample shall not exhibit, due to cross-modulation, any malfunction, degradation of performance or deviation from specified indication beyond the tolerances given in the individual equipment specification or approved test plan when subjected to the following level:

(a) Signal generator 2: 66 dB above the level required to obtain the standard reference output.

6.9 Limit for CS06. - The test sample shall not exhibit any malfunction, degradation of performance or deviation from specified indication beyond the tolerances given in the test sample's individual equipment specification or approved test plan when the spike shown on Figure 19 is applied to the a.c. or d.c. power input lines of the test sample.

6.10 Limits for (T) CS07. -

6.10.1 Test 1. - Squelch circuits shall not open when the output of a 50-ohm impedance impulse generator, set at 90 dBμV/MHz, is applied and matched to the input terminals of the test sample.

6.10.2 Test 2. - The squelch circuit shall not open when two signals are applied at the input of the test sample. One signal shall be an unmodulated rf signal at f_o whose amplitude is 2/3 of the rf voltage used to adjust the squelch threshold. The second signal is an impulse signal of 50 dB μV/MHz.

6.11 Limit for RE01. - Magnetic field emissions in the frequency range of 30 Hz to 30 kHz shall not be generated and radiated in excess of the values shown in the "Acceptable Radiation" portion as shown on Figure 20.

6.12 Limits for RE02. -

6.12.1 Narrowband E-field emissions in the frequency range of 14 kHz to 10 GHz shall not be generated and radiated in excess of the values shown in Figure 21.

6.12.2 Broadband E-field emissions except from electric hand tools in the required frequency range shall not be generated and radiated in excess of the values shown on Figure 22. The limit for electric hand tools shall be as specifically indicated on Figure 22.

6.12.3 In the frequency range of 25 to 200 MHz, the limit shall be met for both horizontally and vertically polarized waves, except for electric hand tools. For these tools the limits apply only to vertically polarized waves.

6.13 Limit for RE03. - Harmonics and all other spurious emissions requiring measurement by the radiated technique shall have absolute peak power not exceeding those shown on Figure 16. The limit does not apply within either the test sample's designed emission bandwidth or $\pm$ 5 percent of f_o, as defined in the test plan.

6.14 Limit for (T) RE04. - Magnetic field emissions in the frequency range of 20 Hz to 50 kHz shall not be generated and radiated in excess of the values shown on Figure 23.

6.15 Limit for RE05. - Broadband emissions in the frequency range of 0.15 to 1000 MHz shall not be generated and radiated in excess of the values shown on Figure 22 for classes IIIA and IIIB items. The limit for class IIIC items (except electrical fork-lift trucks used in critical areas) in the applicable frequency range of 0.15 to 400 MHz shall be relaxed by 20 dB.

6.16 Limit for RE06. - Radiated electromagnetic emissions from overhead power lines shall not exceed the values shown on Figure 24 for the applicable weather condition.

6.17 Limit for RS01. - The test sample shall not exhibit any malfunction, degradation of performance or deviation from specified indications beyond the tolerances specified in the individual equipment specification, in the frequency range of 30 Hz to 30 kHz, when subjected to the magnetic fields less than those shown in the " Acceptable Susceptibility " portion of Figure 20.

Downloaded from http://www.everyspec.com

6.18 Limit for RS02. - The test sample shall not exhibit any malfunction, degradation of performance, or deviation from specified indication beyond tolerances given in the individual equipment specification or approved test plan when subjected to the following fields:

(a) Power Frequency Test. - Twenty (20) amperes applied to the test wire at the power frequency (ies).
(b) Spike Test. - The same spike shape shown in Figure 19 where E = 100 volts across 5 ohms applied to the test wire.

6.19 Limit for RS03 and (T) RS04. - No malfunction, degradation of performance or deviation from specified indication beyond tolerances given in the individual equipment specification or approved test plan shall occur in the frequency range from 14 kHz to 10 GHz when the test sample is subjected to a radiated field of 1 Volt/ meter.

7. NOTES

7.1 International Standardization Agreements. -

Certain provisions of this standard are subject to international standardization agreements STANAG 3456 and STANAG 3516. When amendment, revision or cancellation of this standard is proposed which will affect or violate the international agreement concerned, the preparing activity will take appropriate reconciliation action through international standardization channels, including departmental offices, if required.

Custodians:
Army - EL
Navy - EC
Air Force - 11

Preparing Activity
Navy - EC
(Project EMCP-0003)

Review Activities:
Army - EL, MI, AV
Navy - SH, OS, AS, YD
Air Force - 11, 13, 14, 15, 17, 19, 67, 68, 69, 70, 71, 79, 80, 82, 83, 84

User Activities:
Army - AT, ME, WC, GL, CE, MD
Navy - MC

2434

Downloaded from http://www.everyspec.com

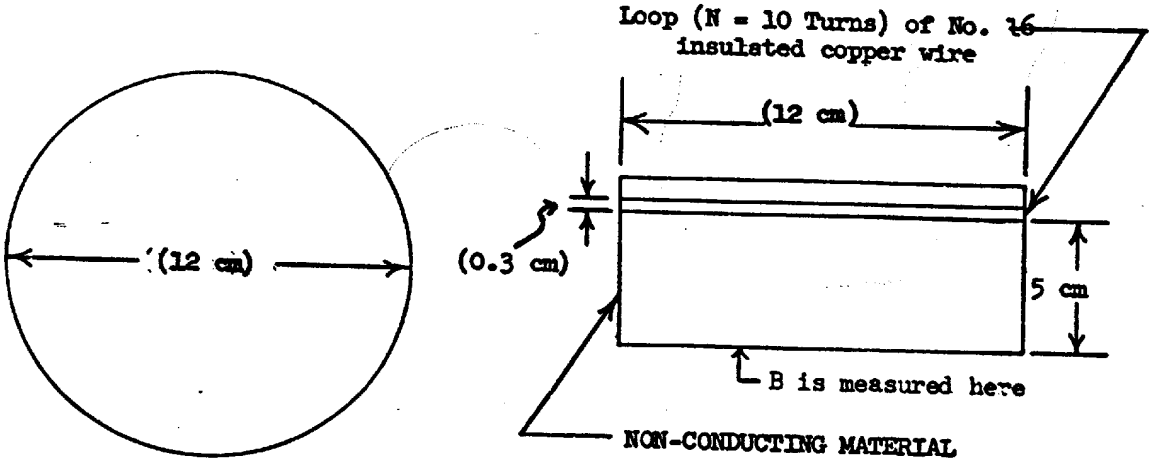

NOTE 1: $B = 5 \times 10^{-5} \frac{\text{Tesla}}{\text{Amp}}$ at 5 cm from wire turns.

NOTE 2: LOOP SELF RESONANT FREQUENCY SHALL BE GREATER THAN 100 kHz.

Figure 1A. Loop used for radiating magnetic fields.

2425

Downloaded from http://www.everyspec.com

FIGURE 1B - Magnetic field emission loop conversion factor.

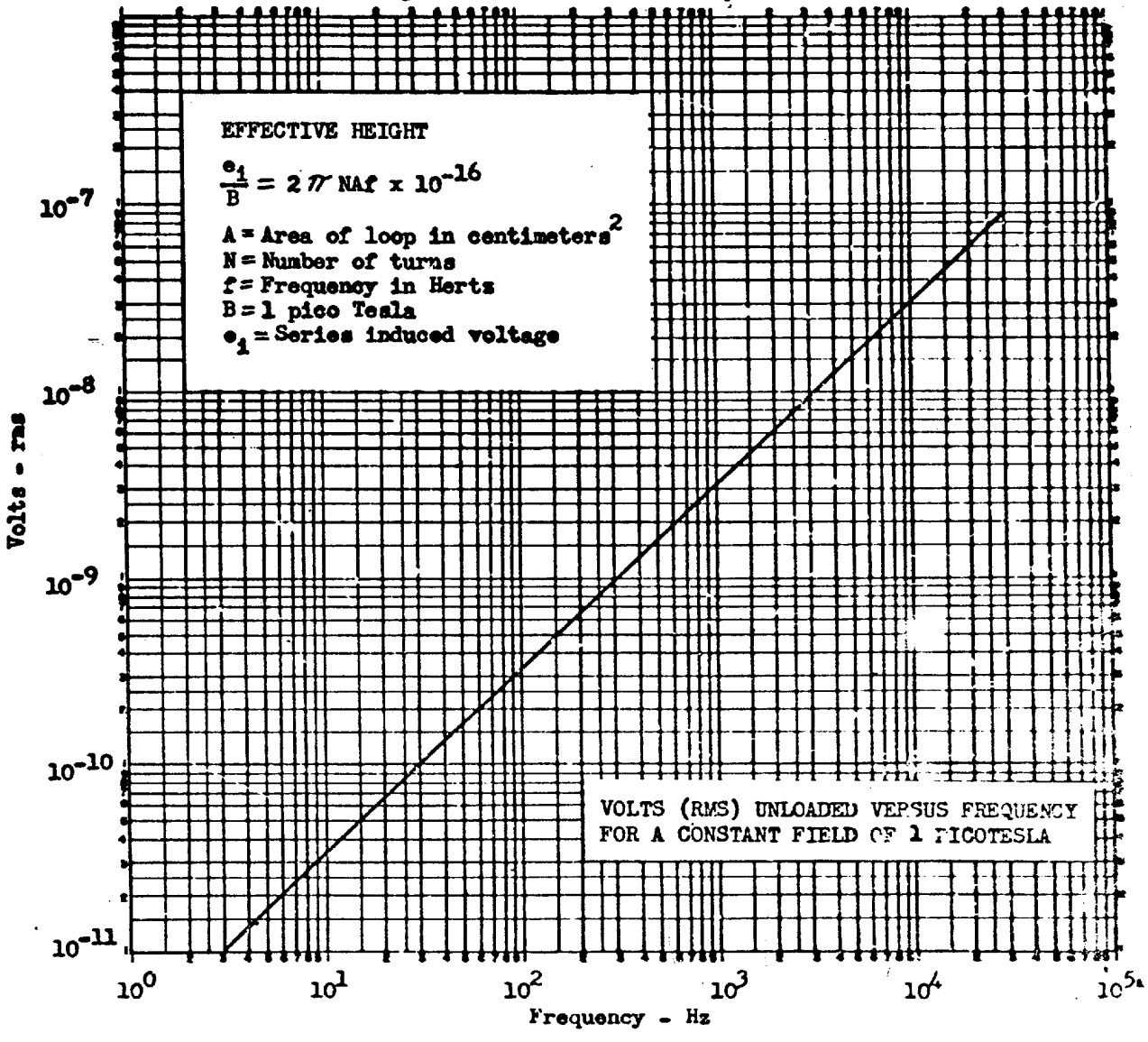

2426

Downloaded from http://www.everyspec.com

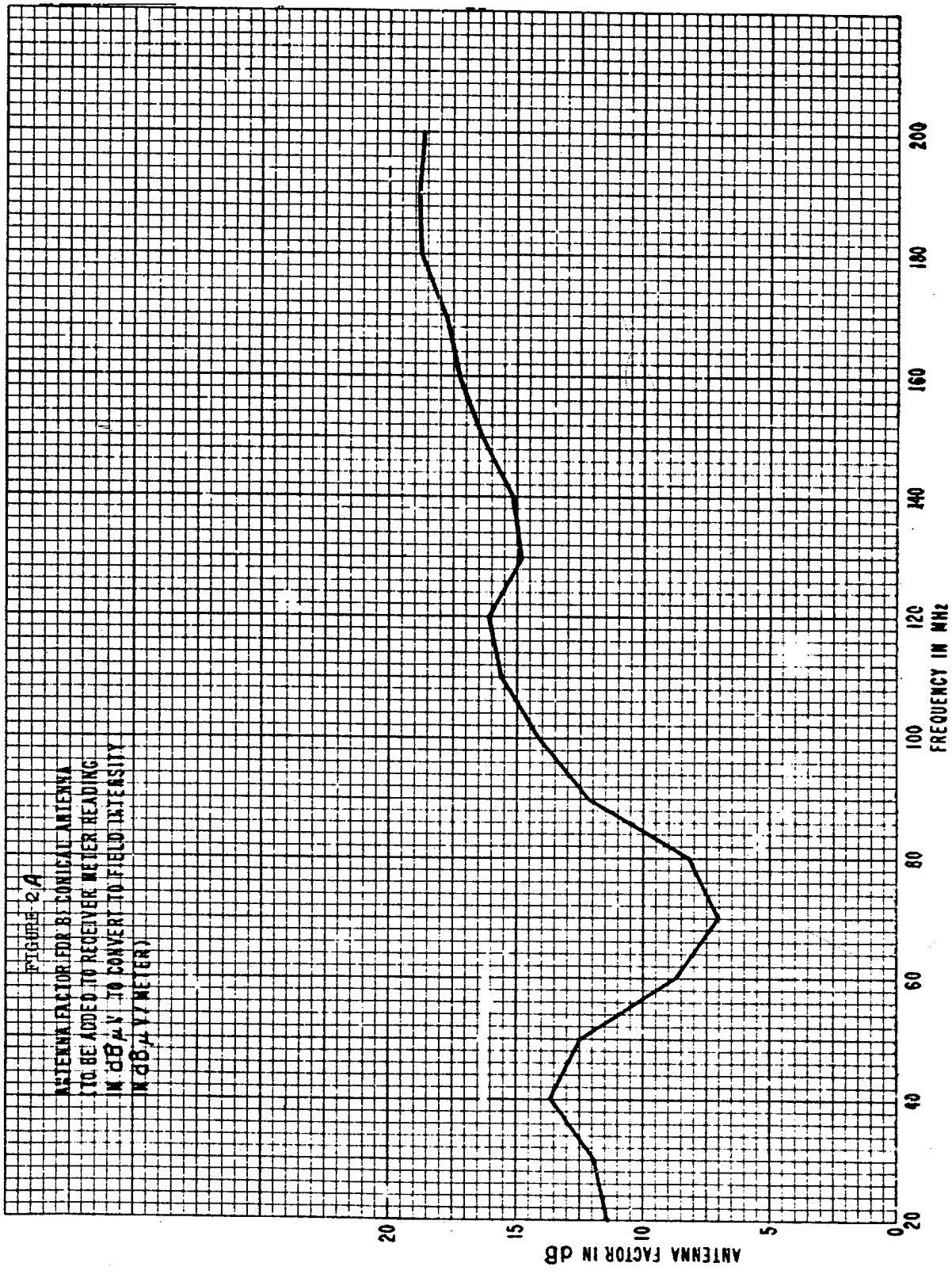

FIGURE 2A
ANTENNA FACTOR FOR BICONICAL ANTENNA
(TO BE ADDED TO RECEIVER METER READING
IN dBμV TO CONVERT TO FIELD INTENSITY
IN dBμV/METER)

2427

Downloaded from http://www.everyspec.com

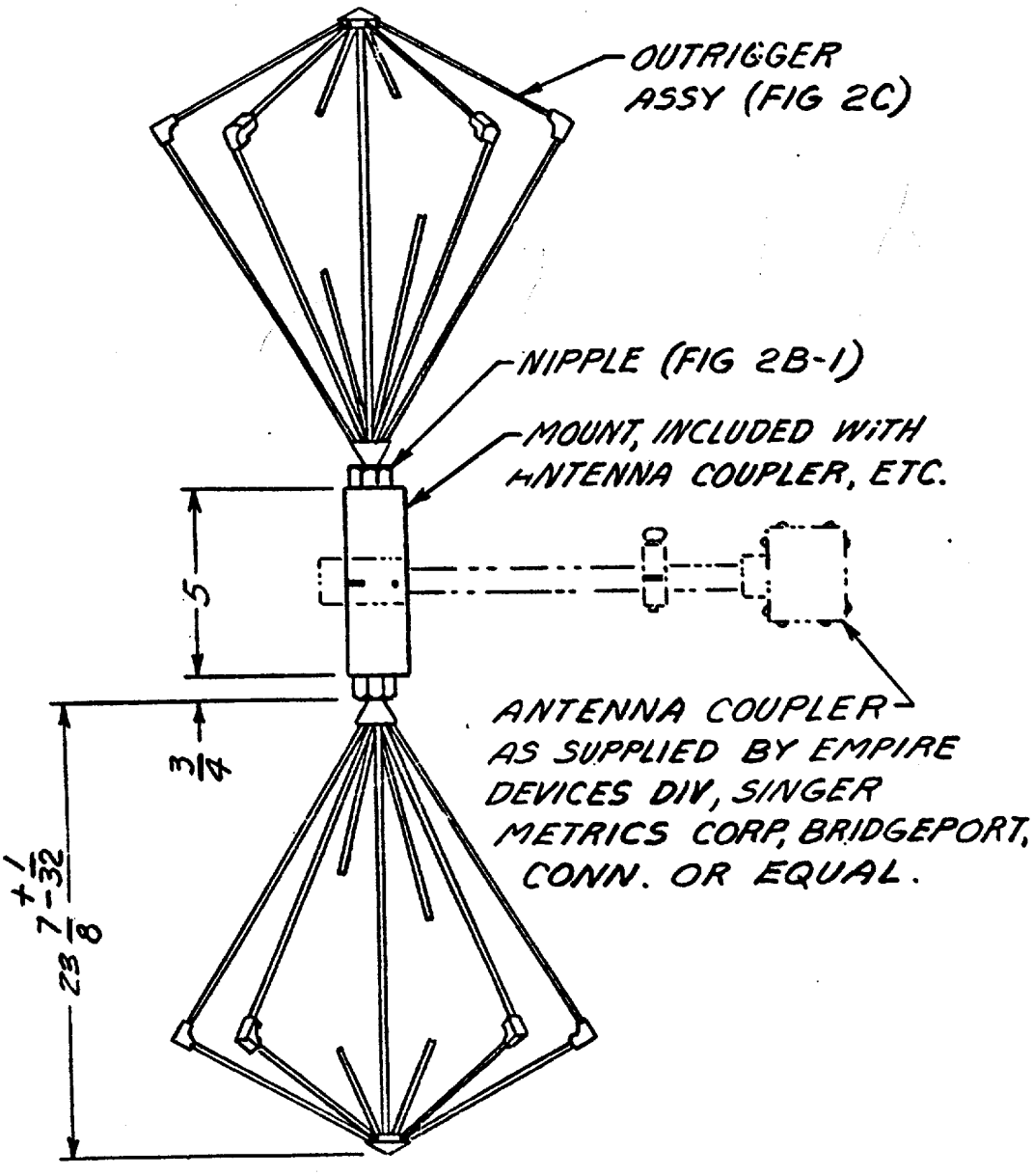

NOTE: DISCARD MOUNT SUPPLIED WITH ANT. COUPLER CU-893/URM-85, REPLACE WITH FIG. 2B-2. MOUNT INCLUDED WITH ANT. COUPLERS DM-105-T1 & DM-205-T1.

FIG 2B ANTENNA ASSEMBLY
(DRAWING ES-F-201286 SHEET 1)

2628

Downloaded from http://www.everyspec.com

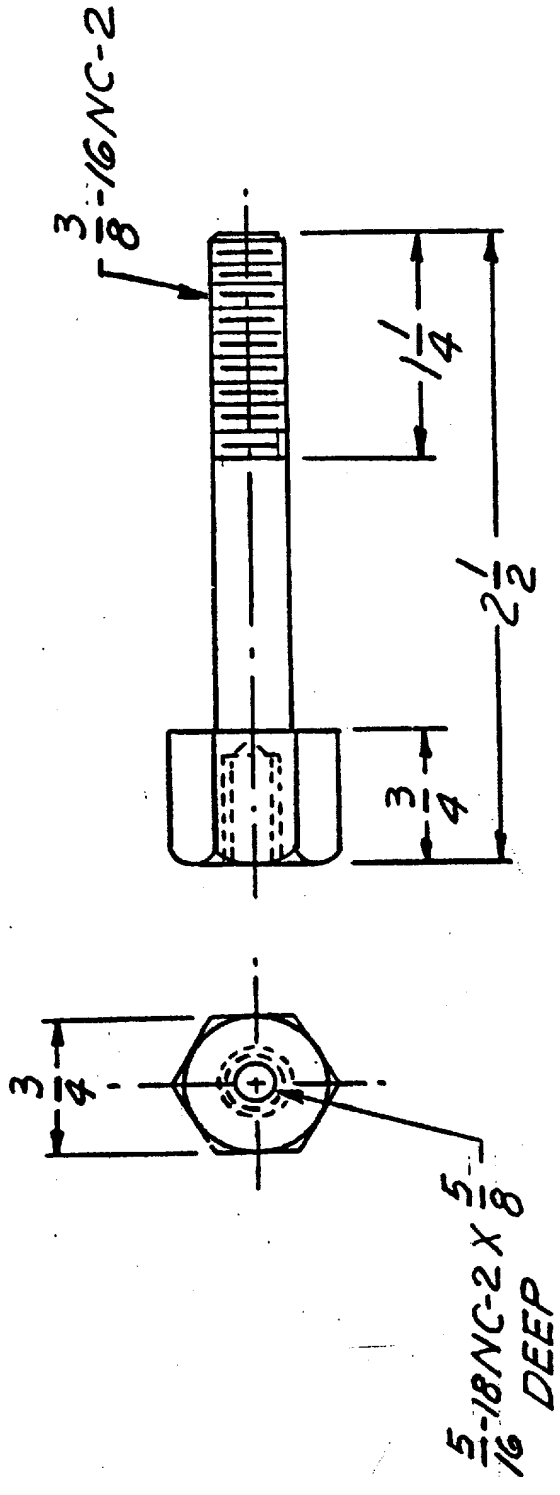

FIG 2B-1 BRASS NIPPLE

2429

Downloaded from http://www.everyspec.com

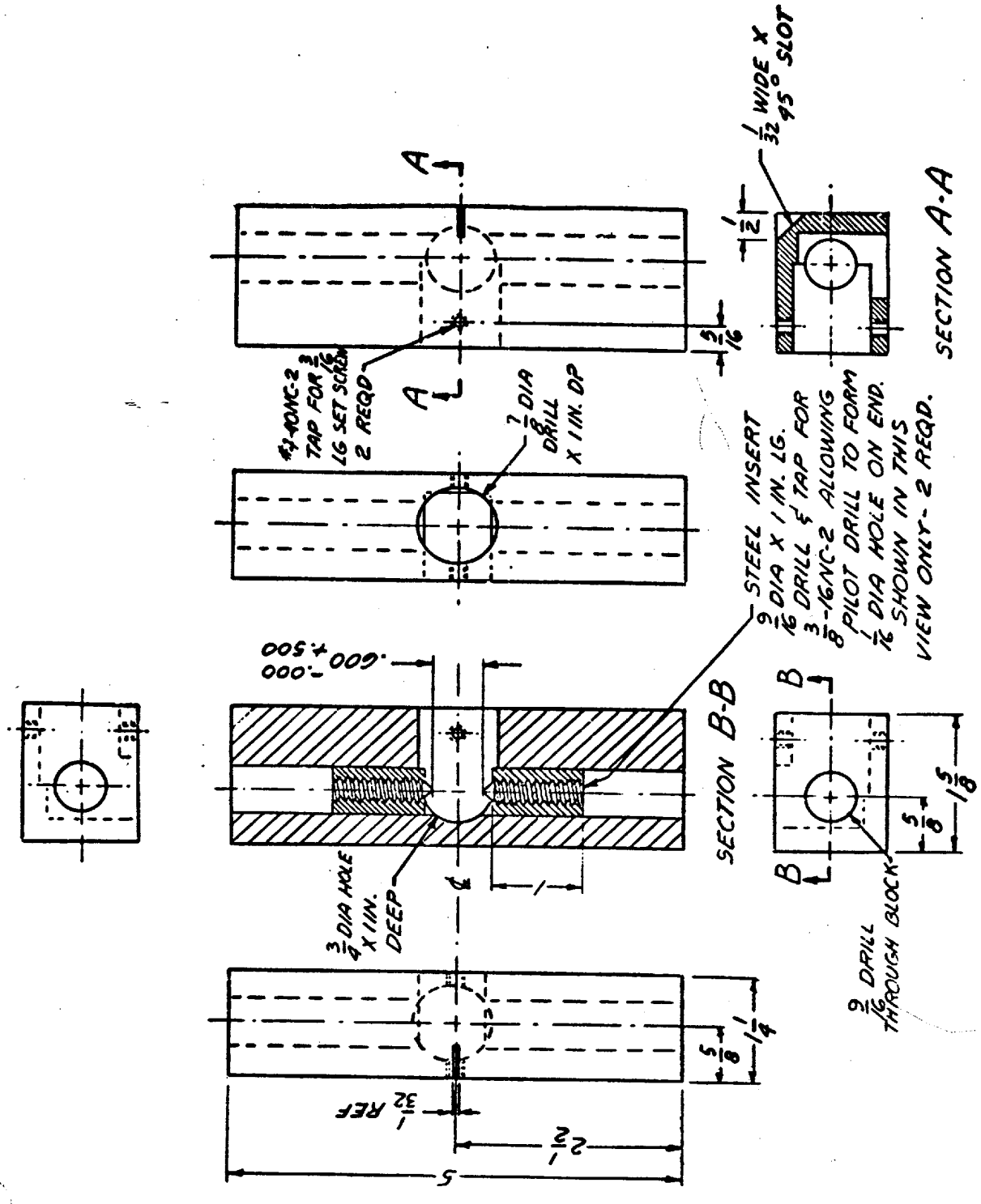

FIG 2B-2 PHENOLIC MOUNT

Downloaded from http://www.everyspec.com

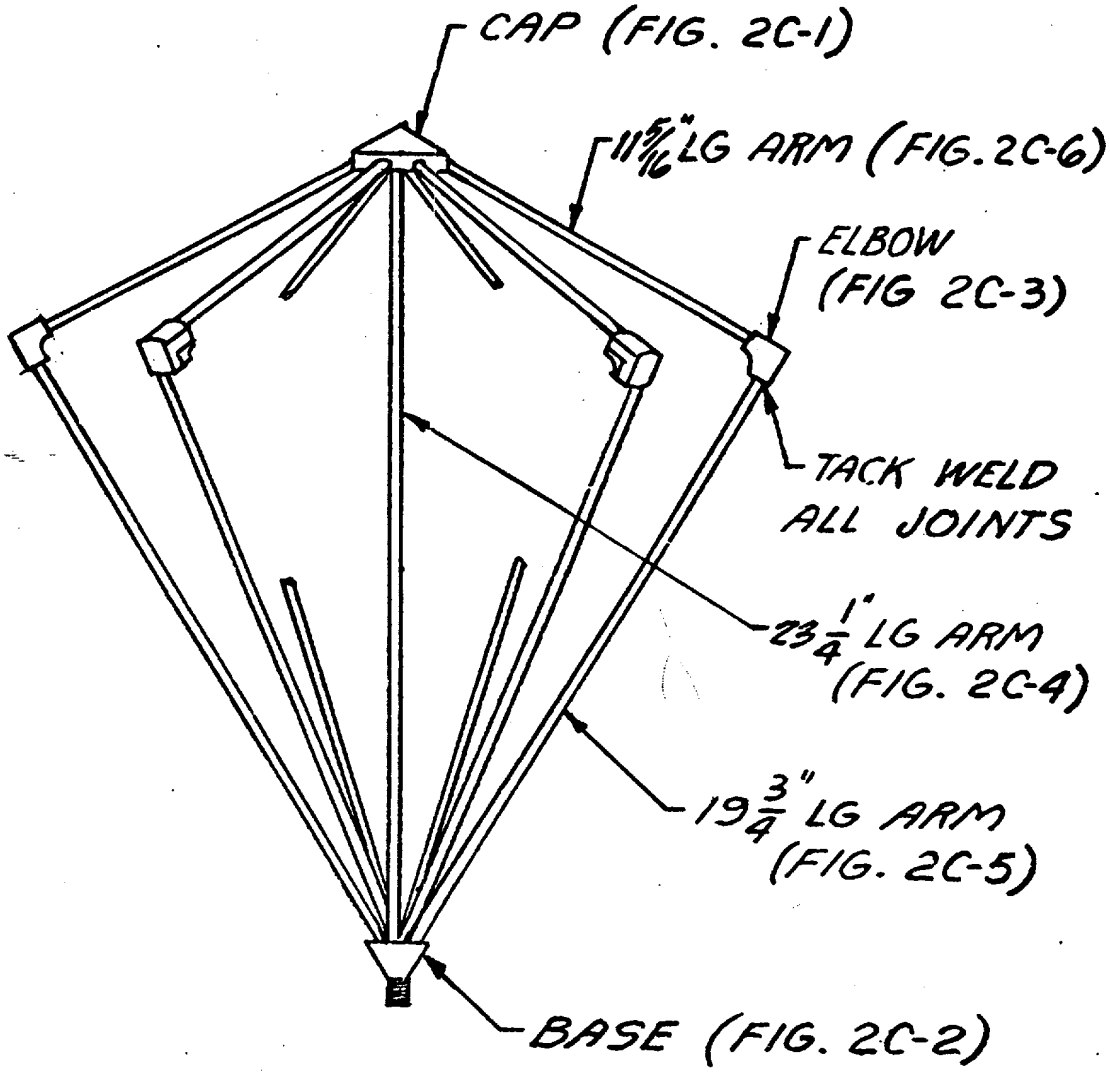

FIG 2C OUTRIGGER ASSEMBLY

2 REQD

(DRAWING ES-F-201286 SHEET 2)

Downloaded from http://www.everyspec.com

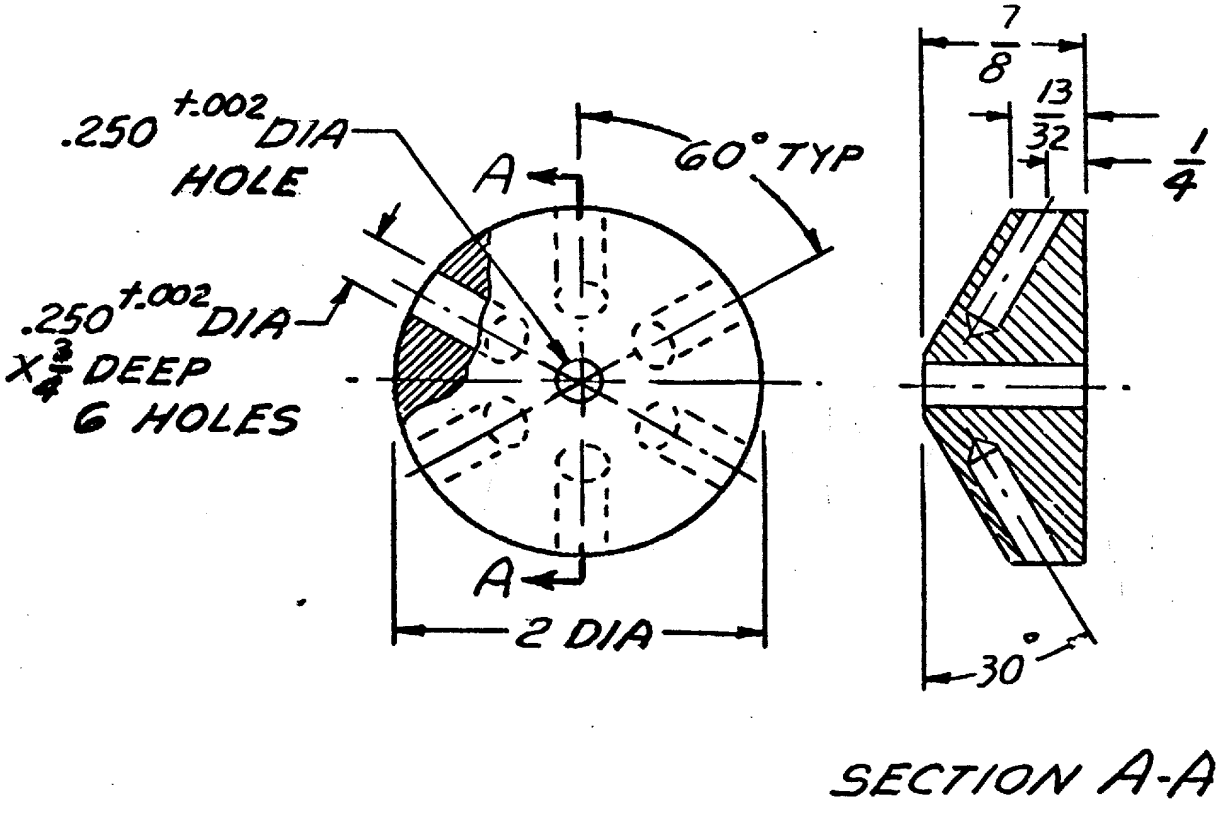

ALUMINUM ALLOY
1 REQD

FIG 2C-1 CAP

2432

Downloaded from http://www.everyspec.com

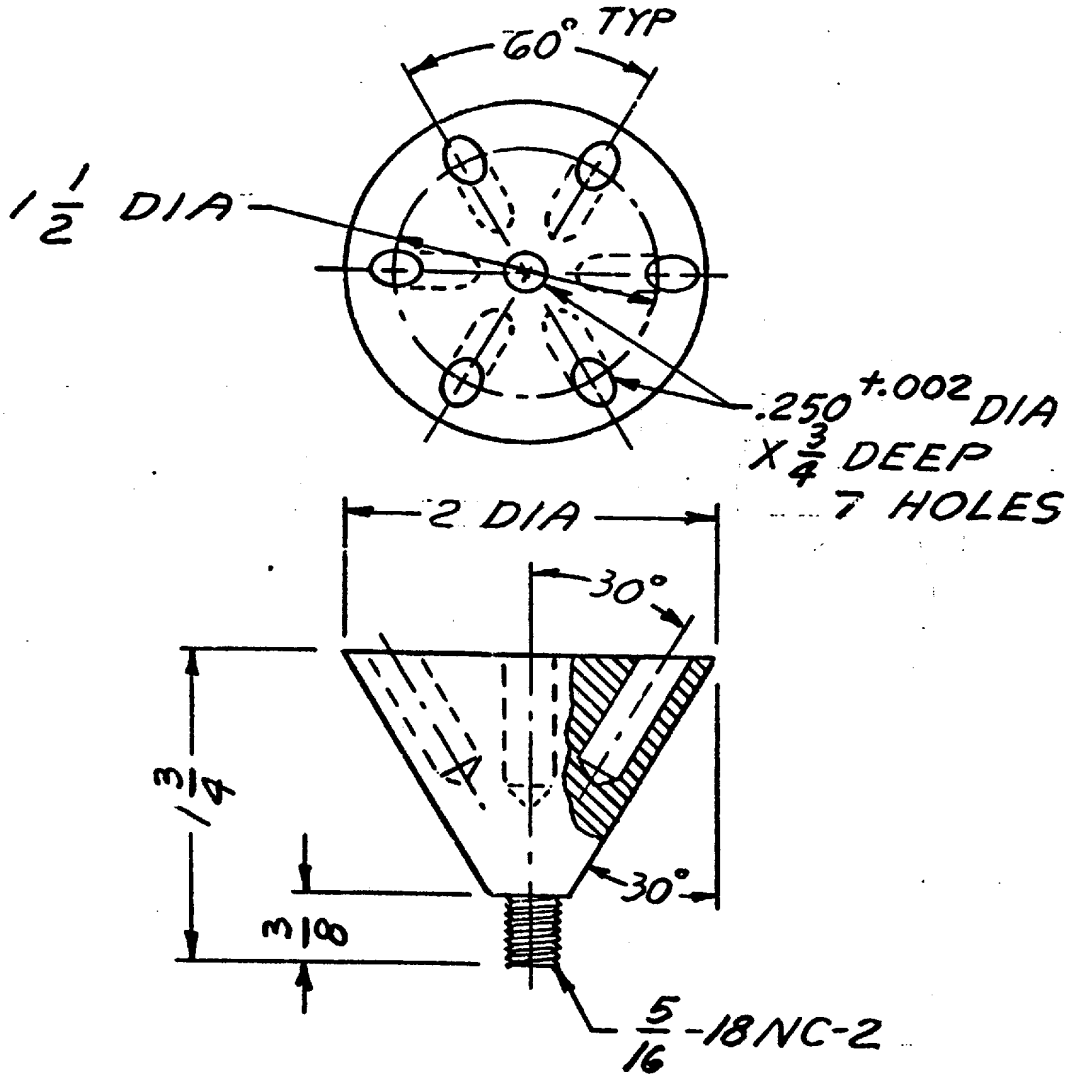

ALUMINUM ALLOY
1 REQD

FIG 2C-2 BASE

Downloaded from http://www.everyspec.com

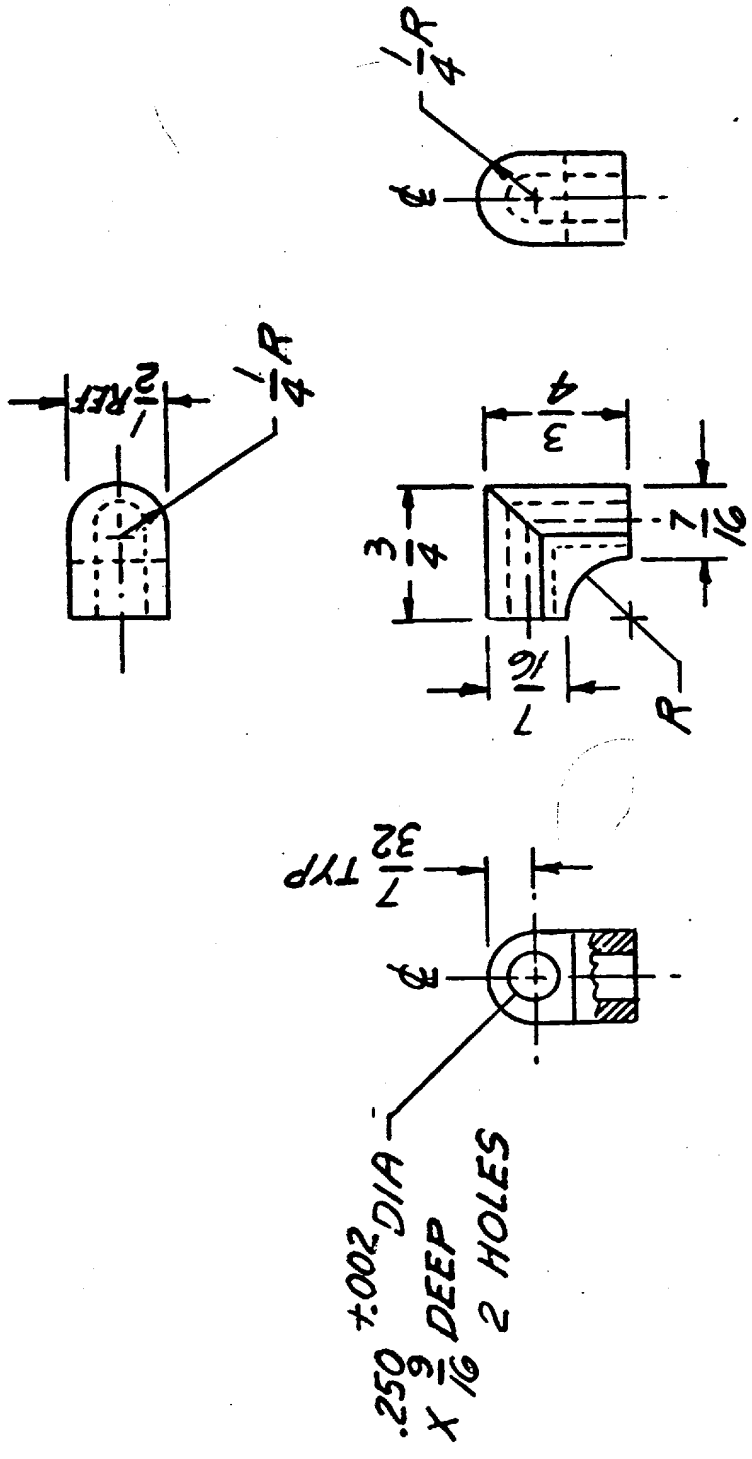

ALUMINUM ALLOY
6 REQD

FIG 2C-3 ELBOW

2436

Downloaded from http://www.everyspec.com

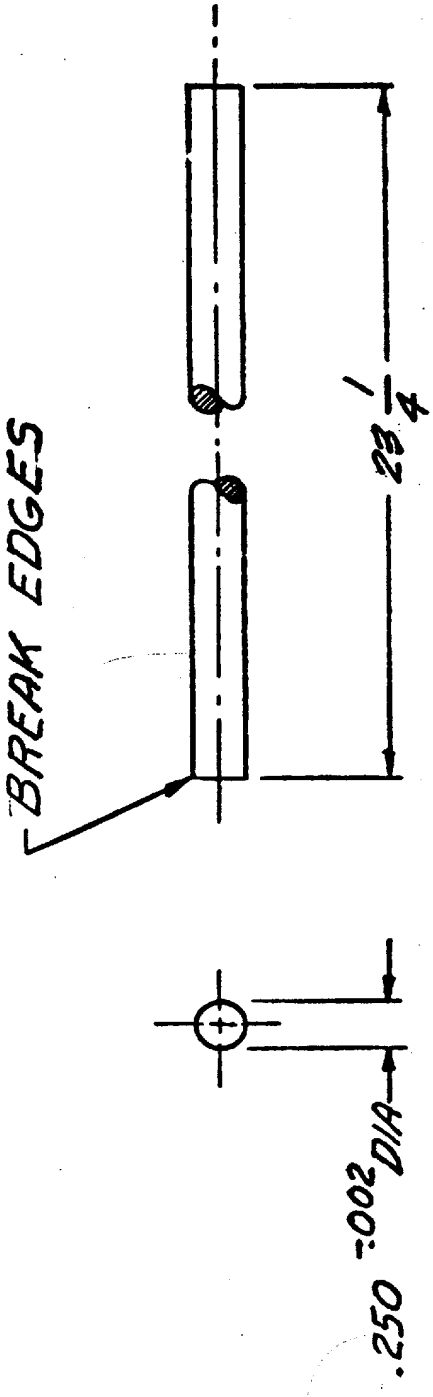

ALUMINUM ALLOY
1 REQD

FIG 2C-4 ARM

2435

Downloaded from http://www.everyspec.com

2

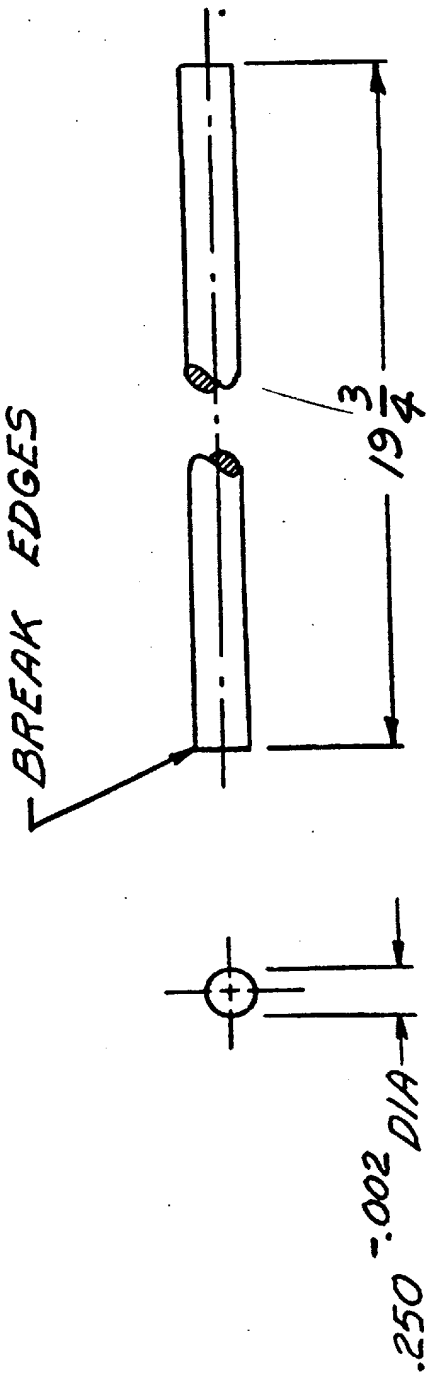

ALUMINUM ALLOY
6 REQD

FIG 2C-5 ARM

2436
2863

Downloaded from http://www.everyspec.com

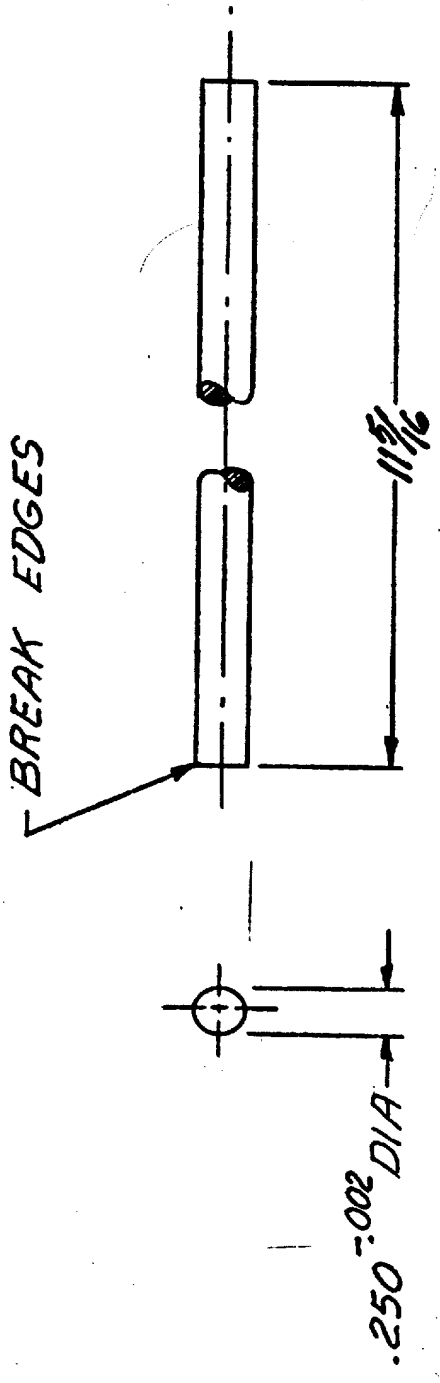

ALUMINUM ALLOY
6 REQD

FIG 2C-6 ARM

Downloaded from http://www.everyspec.com

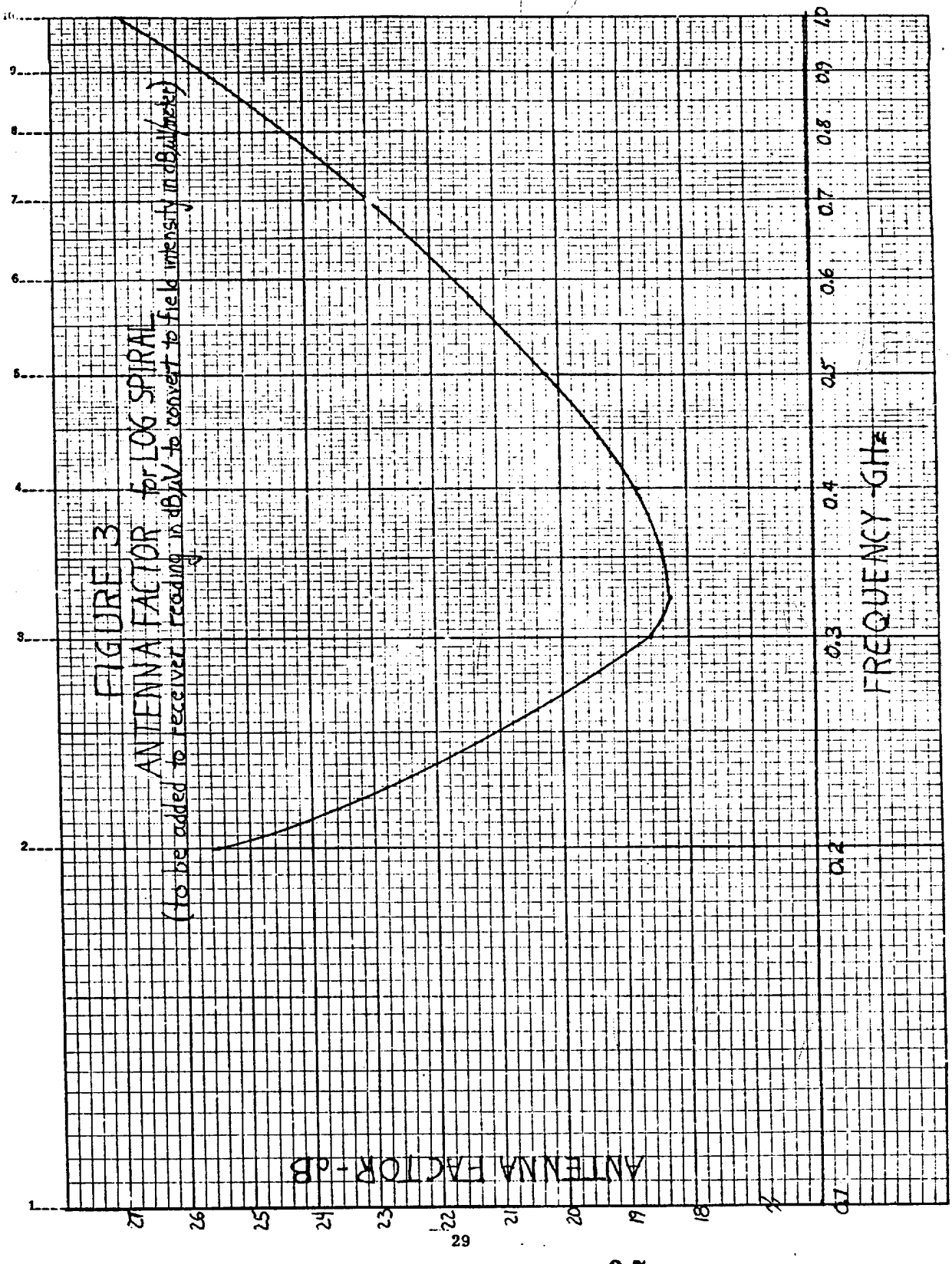

3438

Downloaded from http://www.everyspec.com

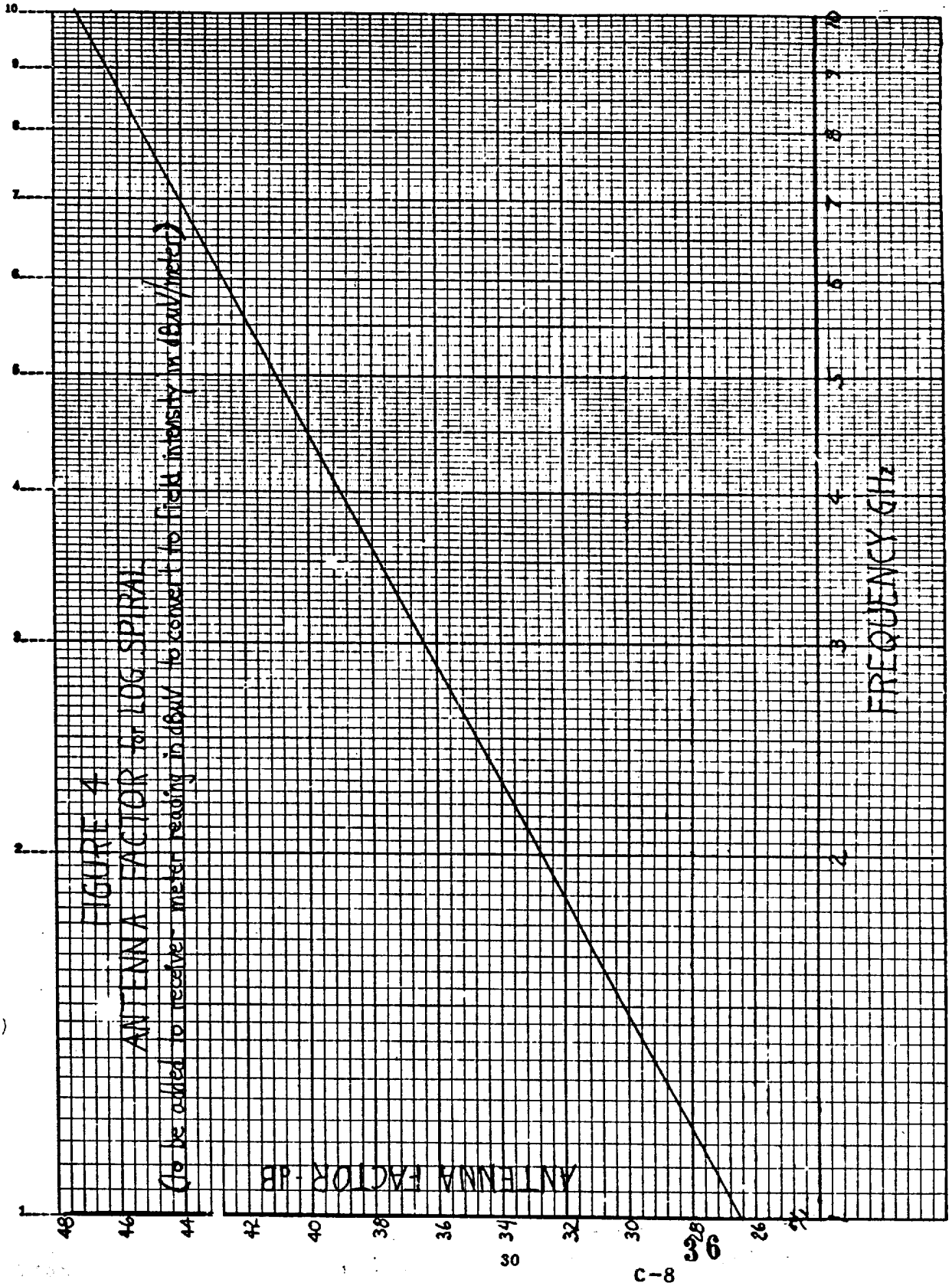

FIGURE 4
ANTENNA FACTOR for LOG SPIRAL
(To be added to receiver meter reading in dBuV to convert to field intensity in dBuV/meter)

2439

Downloaded from http://www.everyspec.com

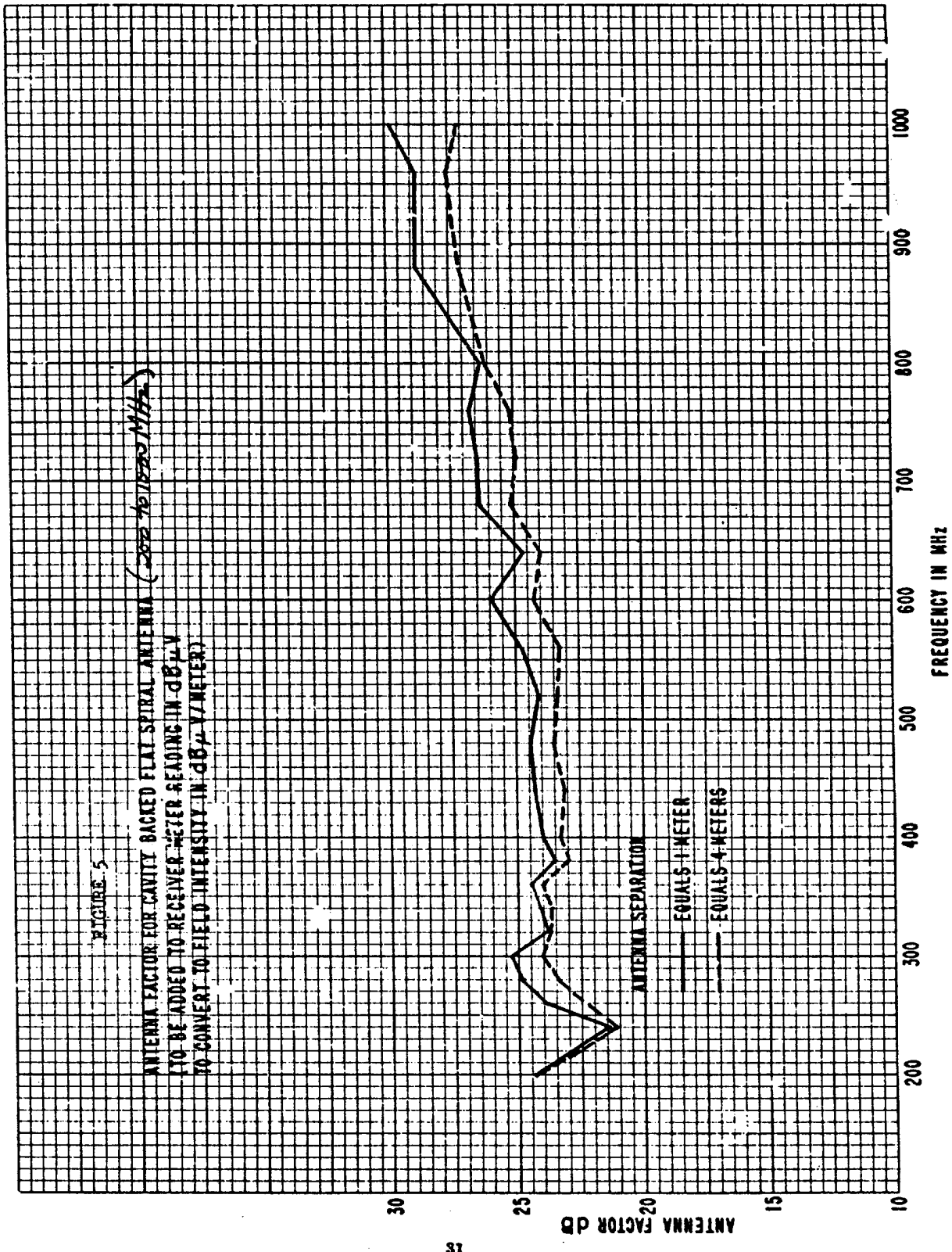

FIGURE 5

ANTENNA FACTOR FOR CAVITY BACKED FLAT SPIRAL ANTENNA (200 to 1000 MHz)
(TO BE ADDED TO RECEIVER METER READING IN dBμV
TO CONVERT TO FIELD INTENSITY IN dBμ V/METER)

2440

Downloaded from http://www.everyspec.com

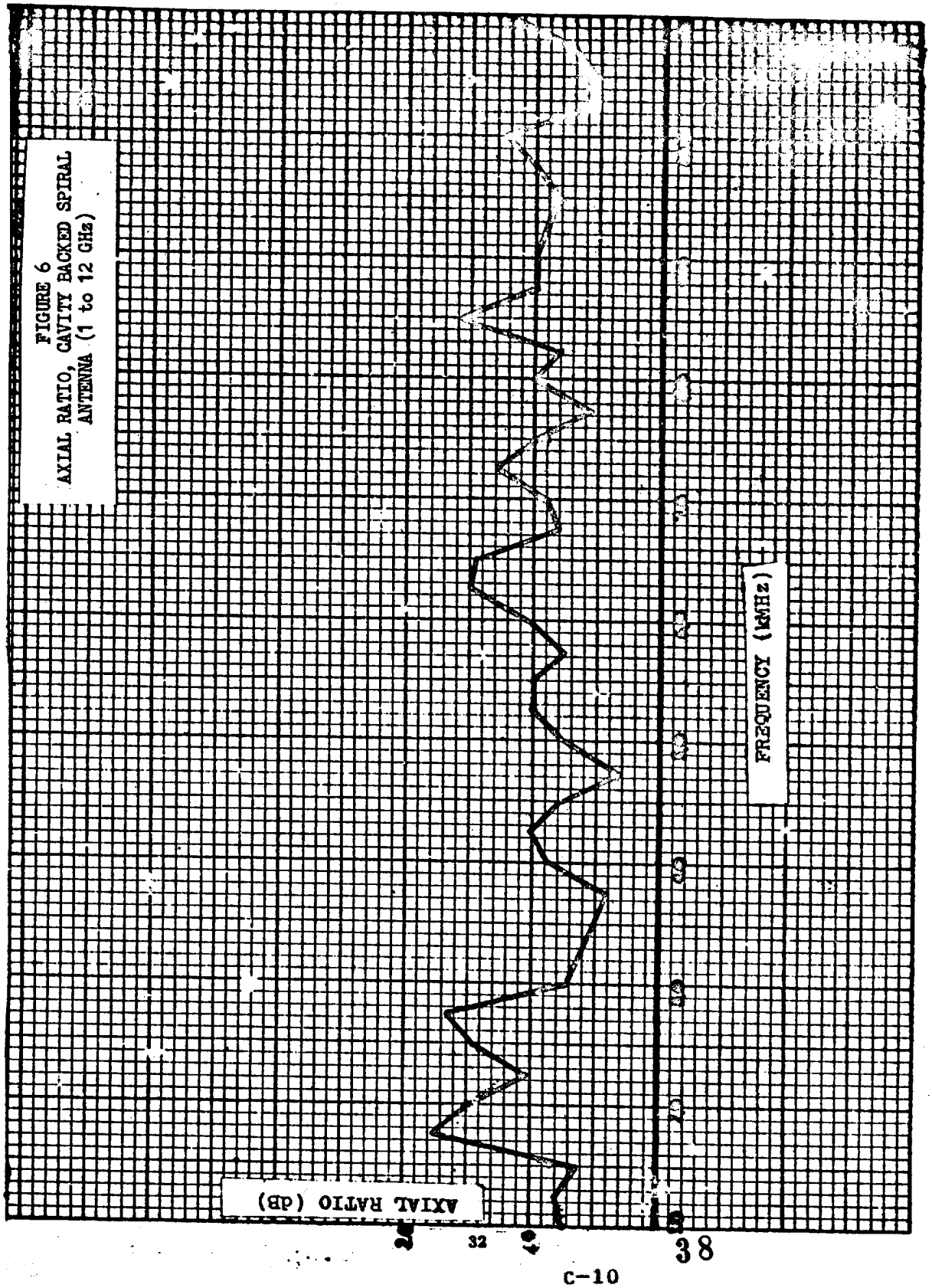

FIGURE 6
AXIAL RATIO, CAVITY BACKED SPIRAL ANTENNA (1 to 12 GHz)

Downloaded from http://www.everyspec.com

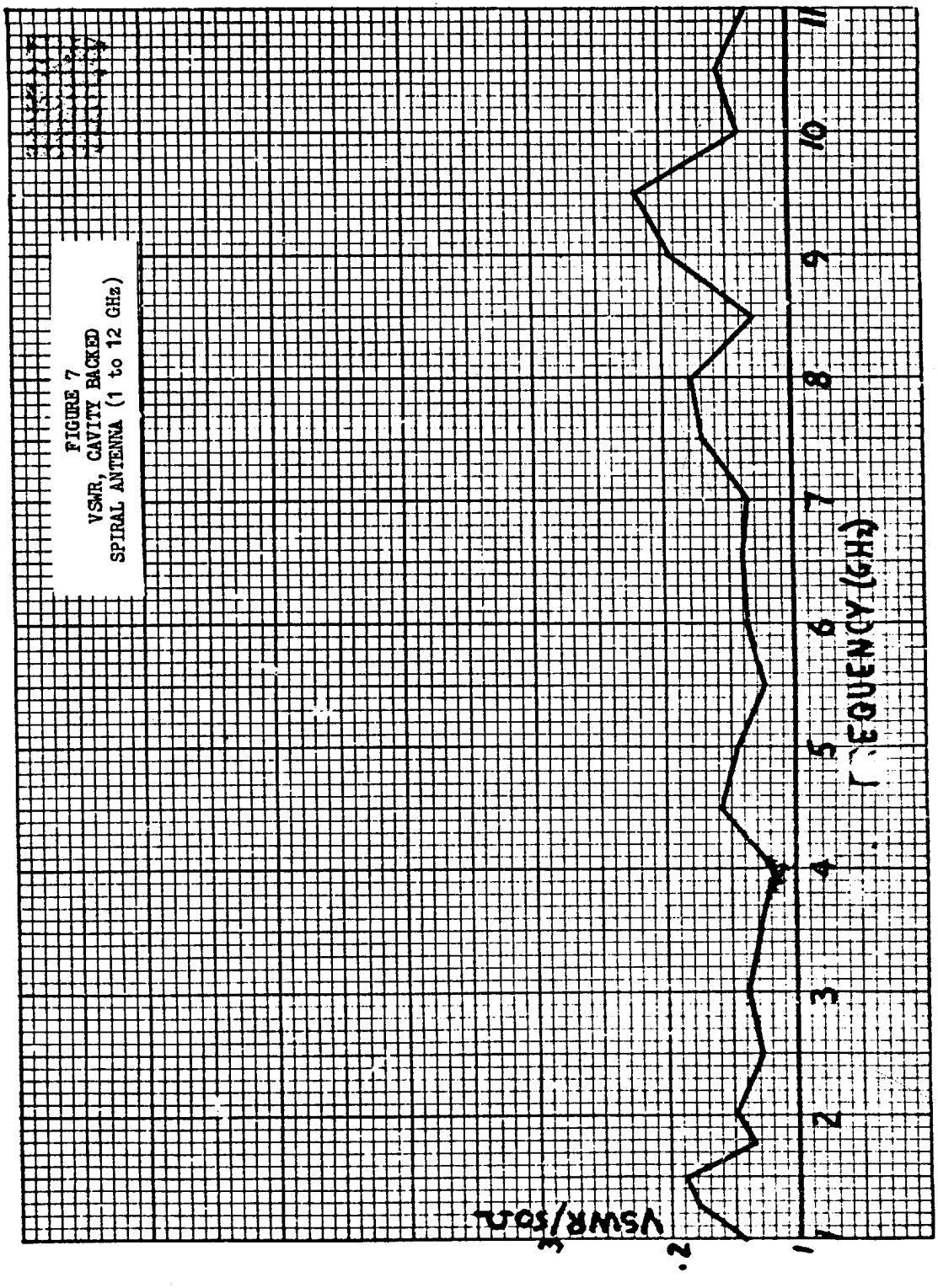

FIGURE 7
VSWR, CAVITY BACKED
SPIRAL ANTENNA (1 to 12 GHz)

2442

Downloaded from http://www.everyspec.com

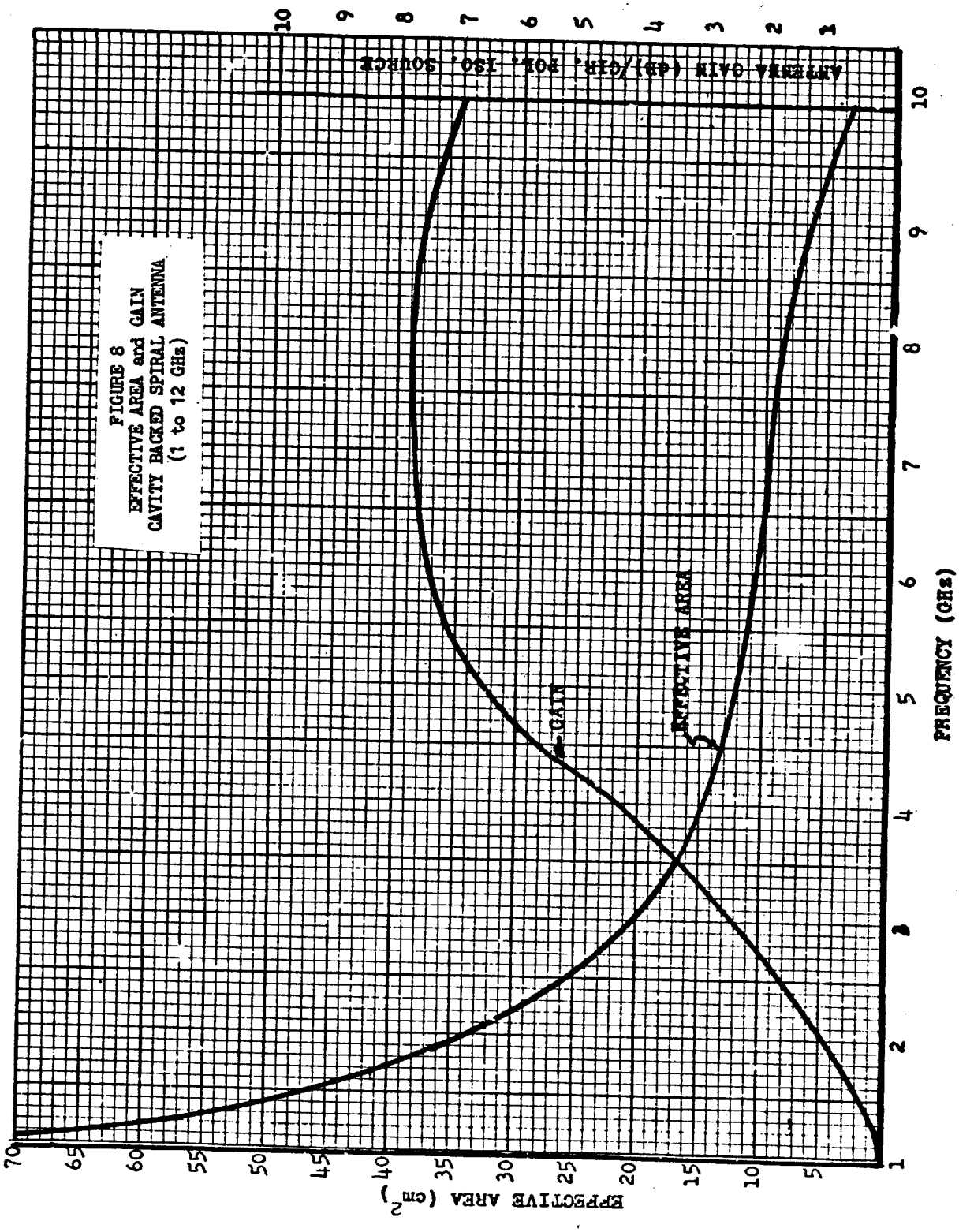

FIGURE 8
EFFECTIVE AREA and GAIN
CAVITY BACKED SPIRAL ANTENNA
(1 to 12 GHz)

Downloaded from http://www.everyspec.com

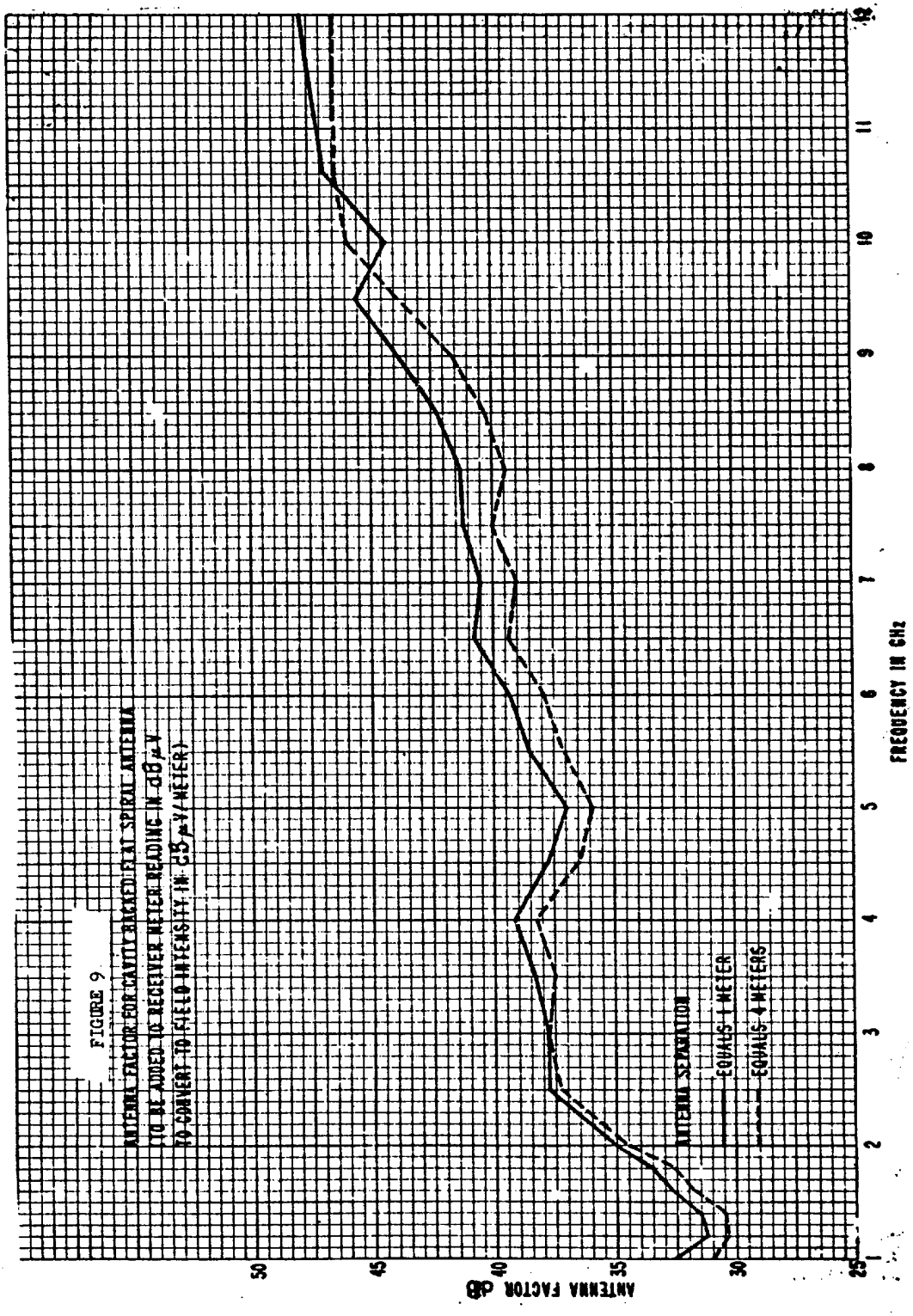

FIGURE 9
ANTENNA FACTOR FOR CALIBRATED FLAT SPIRAL ANTENNA
(TO BE ADDED TO RECEIVER METER READING IN dB μV
TO CONVERT TO FIELD INTENSITY IN dB μV/METER)

2444

Downloaded from http://www.everyspec.com

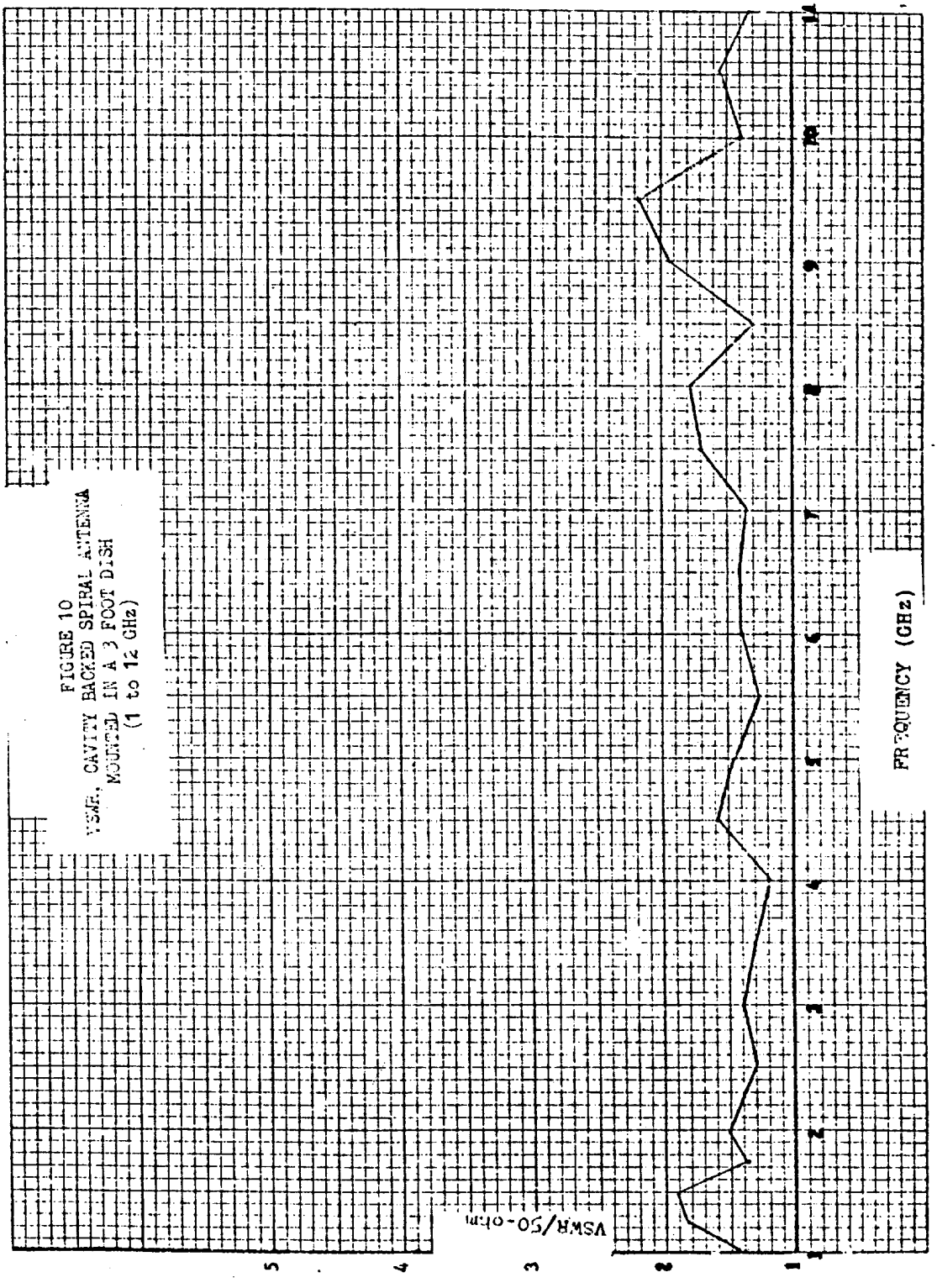

FIGURE 10
VSWR, CAVITY BACKED SPIRAL ANTENNA
MOUNTED IN A 3 FOOT DISH
(1 to 12 GHz)

2445

Downloaded from http://www.everyspec.com

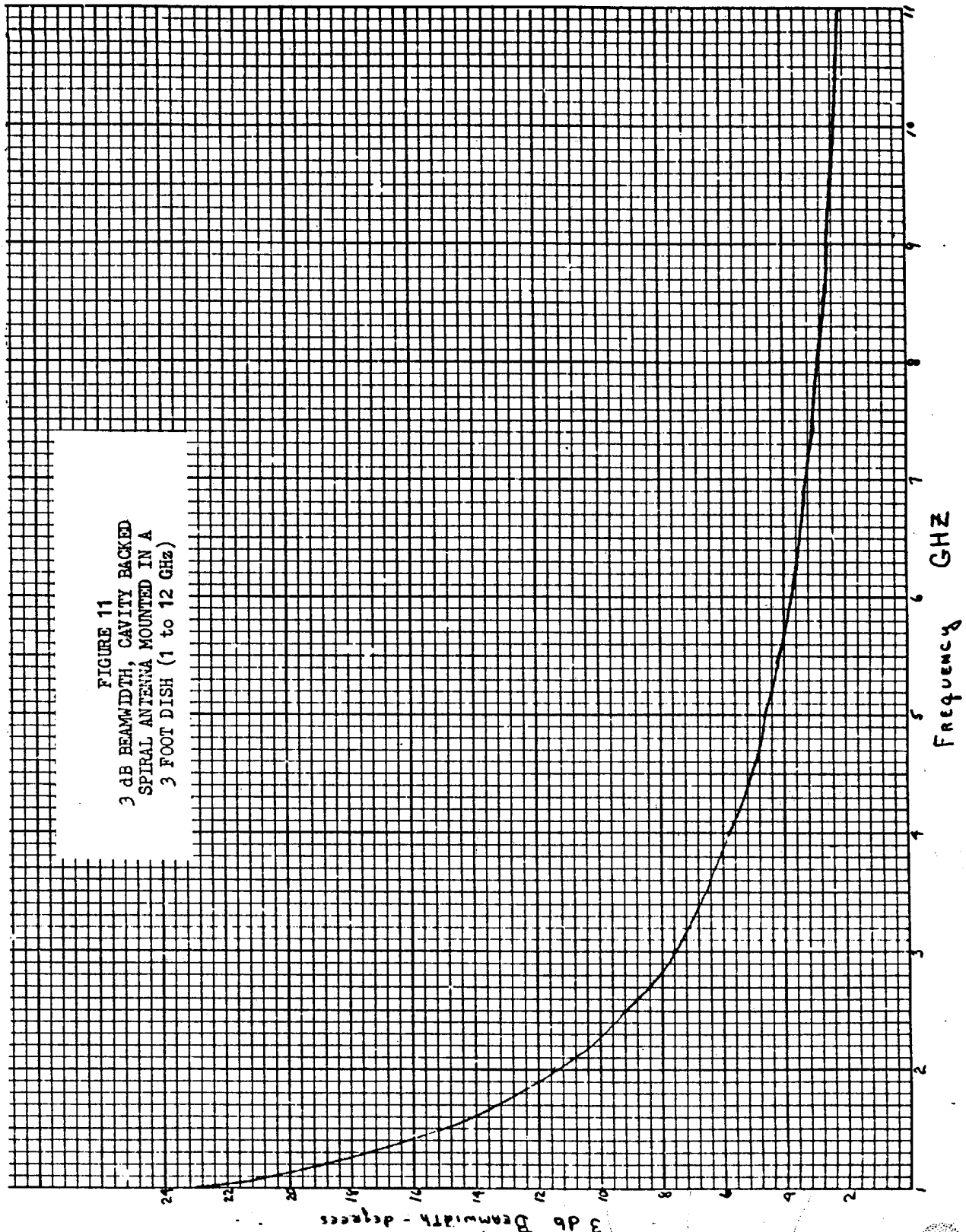

FIGURE 11
3 dB BEAMWIDTH, CAVITY BACKED
SPIRAL ANTENNA MOUNTED IN A
3 FOOT DISH (1 to 12 GHz)

2666

Downloaded from http://www.everyspec.com

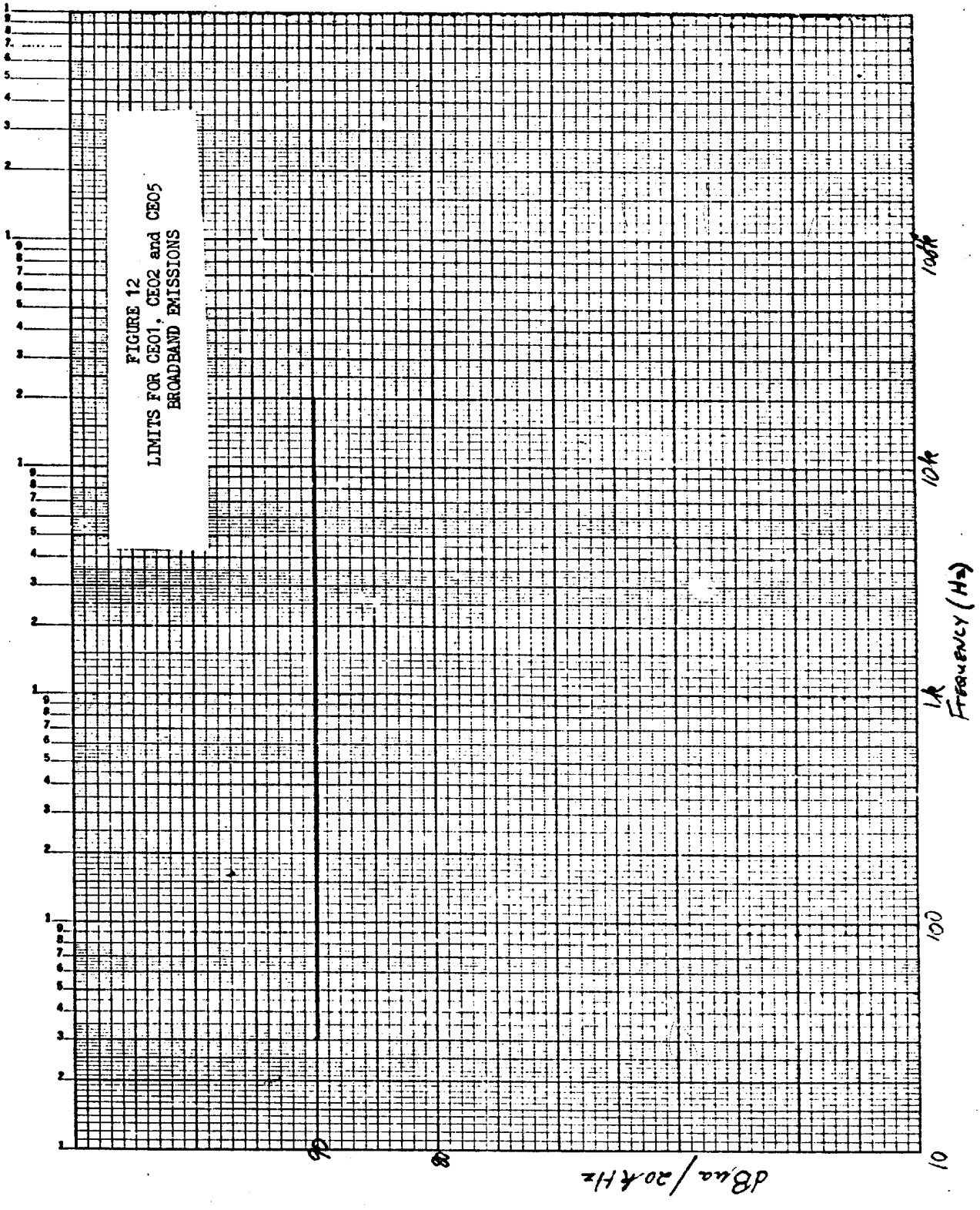

2447

Downloaded from http://www.everyspec.com

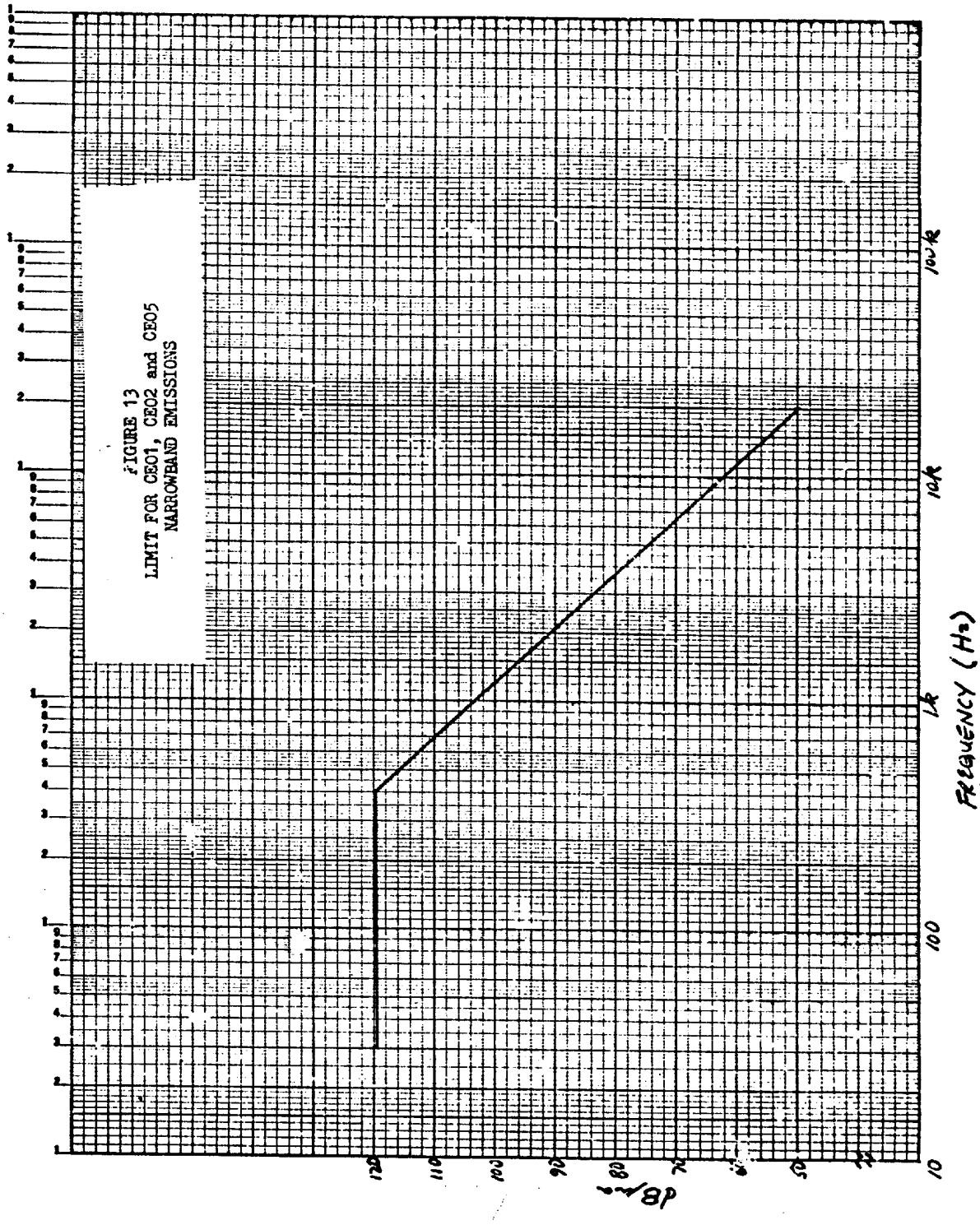

2448

Downloaded from http://www.everyspec.com

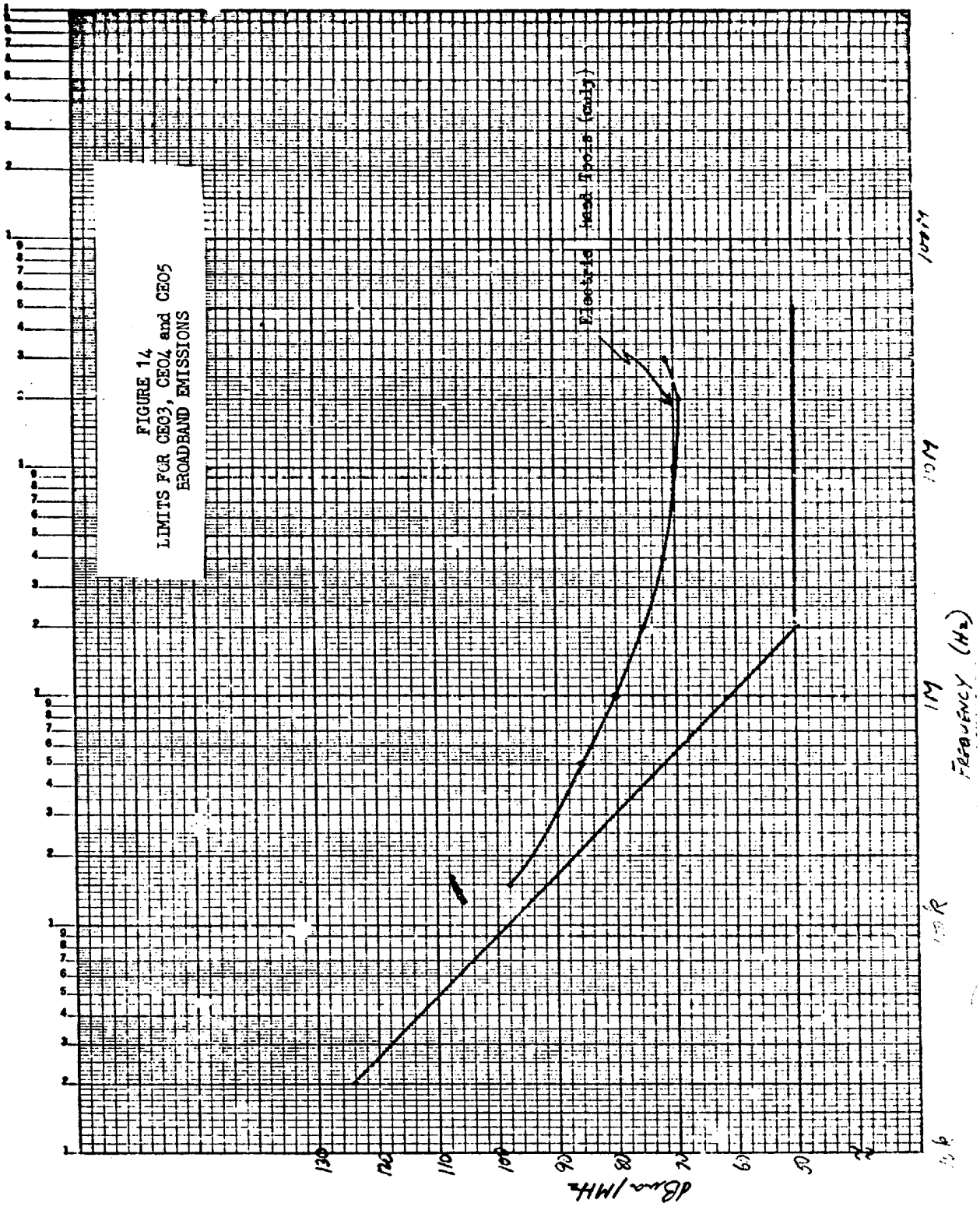

FIGURE 14
LIMITS FOR CE03, CE04 and CE05
BROADBAND EMISSIONS

2649

Downloaded from http://www.everyspec.com

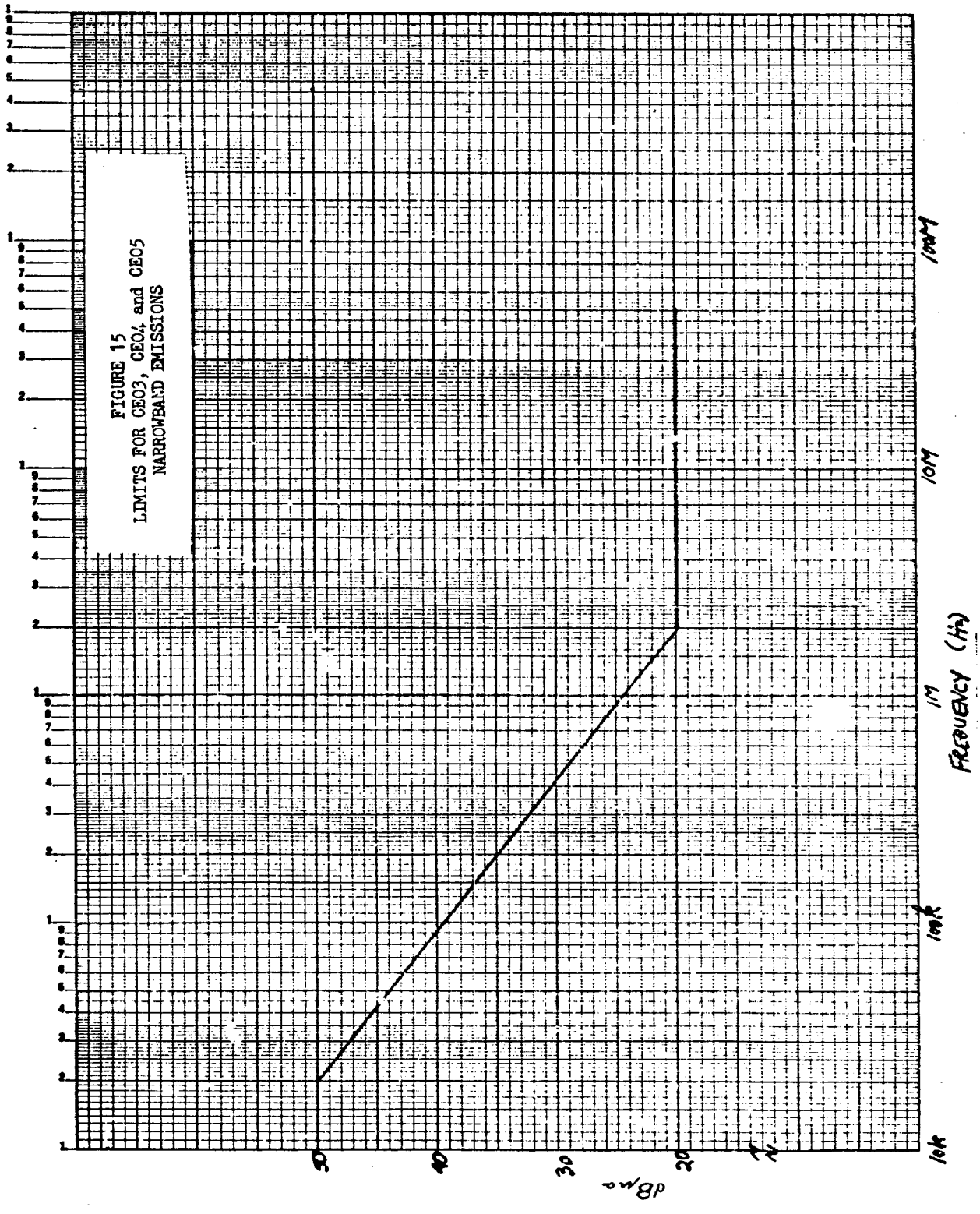

2450

Downloaded from http://www.everyspec.com

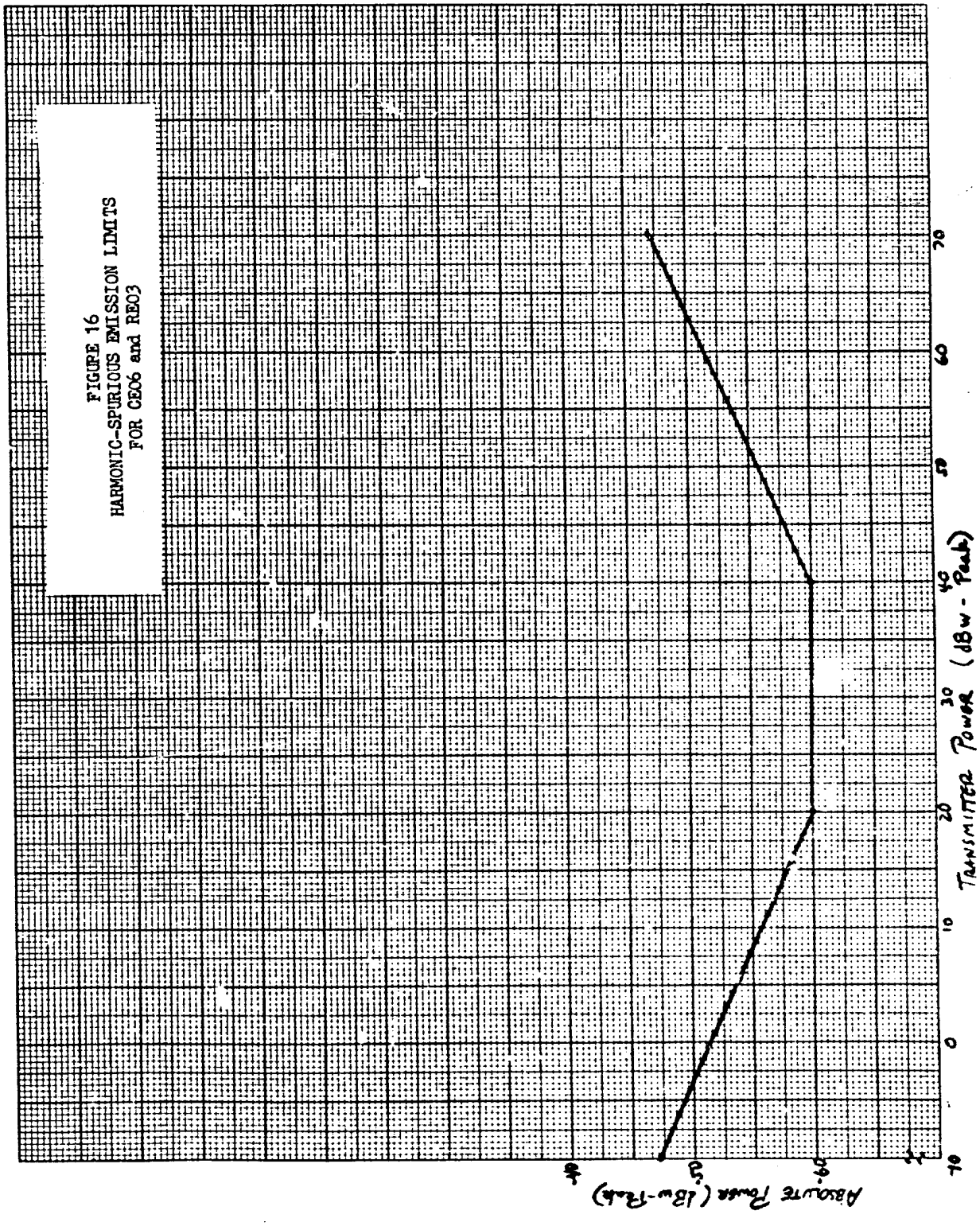

FIGURE 16
HARMONIC-SPURIOUS EMISSION LIMITS
FOR CE06 and RE03

2651

Downloaded from http://www.everyspec.com

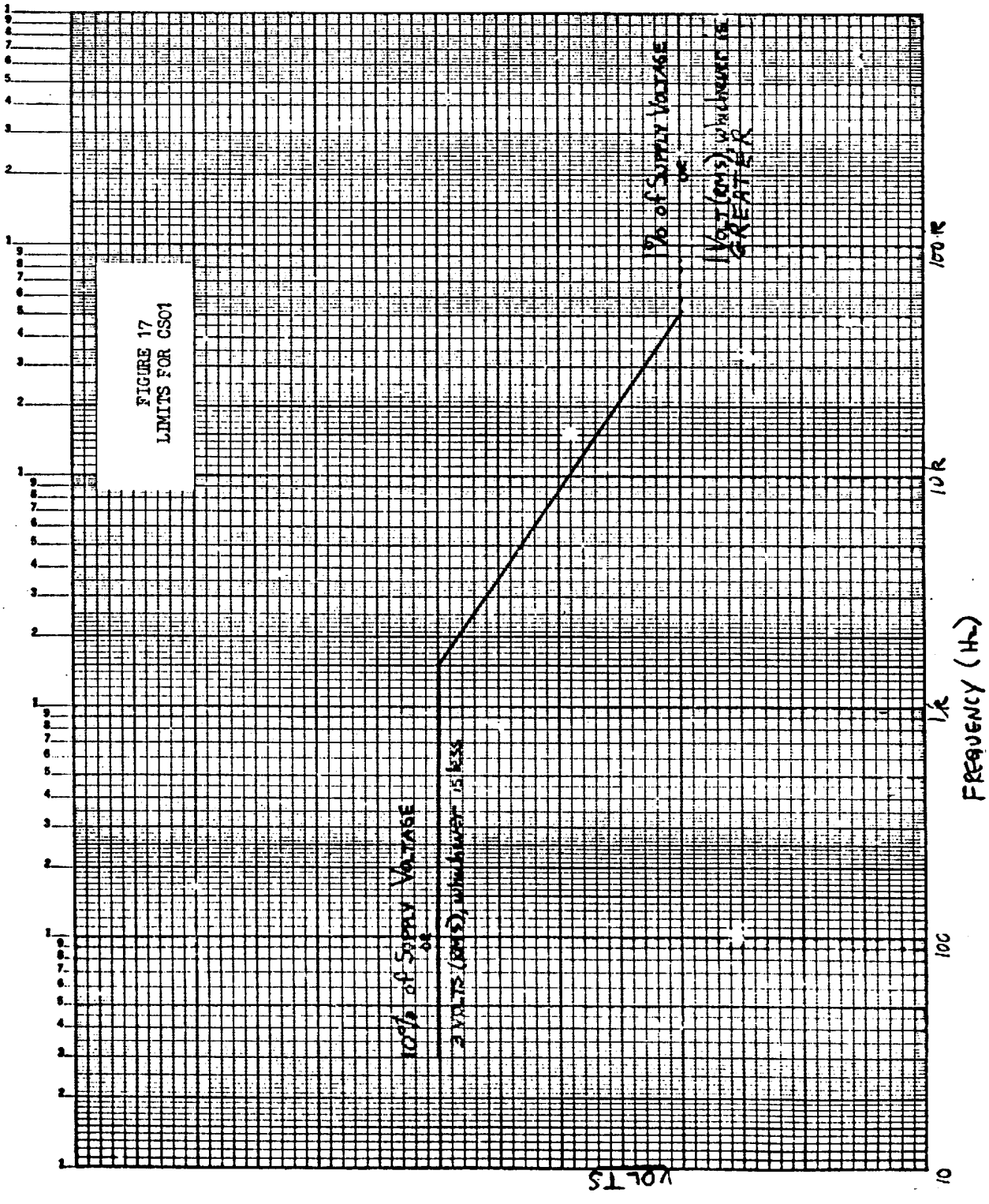

2452

Downloaded from http://www.everyspec.com

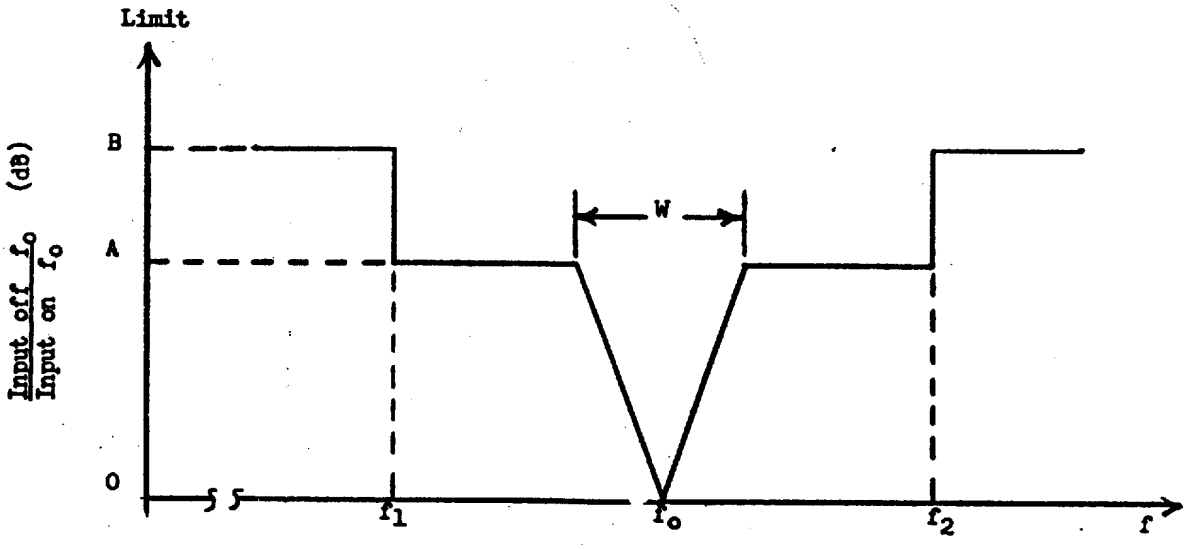

f_o = Receiver tuned frequency or band center for amplifiers.
f_1 = Lowest tunable frequency of receiver band in use or the lowest frequency of amplifier passband.
f_2 = Highest tunable frequency of receiver band in use or the highest frequency of amplifier passband.
W = Bandwidth between the 80 dB points of the receiver selectivity curve as defined in the test sample's technical requirements or the control plan.

Limits:

1. The limit at A is 80 dB above the input level required to produce the standard reference output. (This limit shall not be used for amplifiers)

2. The limit at B shall be set as follows:

a. Receivers: 0 dBmw applied directly to the receiver input terminals.

b. Amplifiers: The limit shall be as specified in the test sample's technical requirement or control plan. If no limit is defined in the above documents, the 0 dBmw value shall be used.

Figure 18 - Limits for CS04 and CS06

Downloaded from http://www.everyspec.com

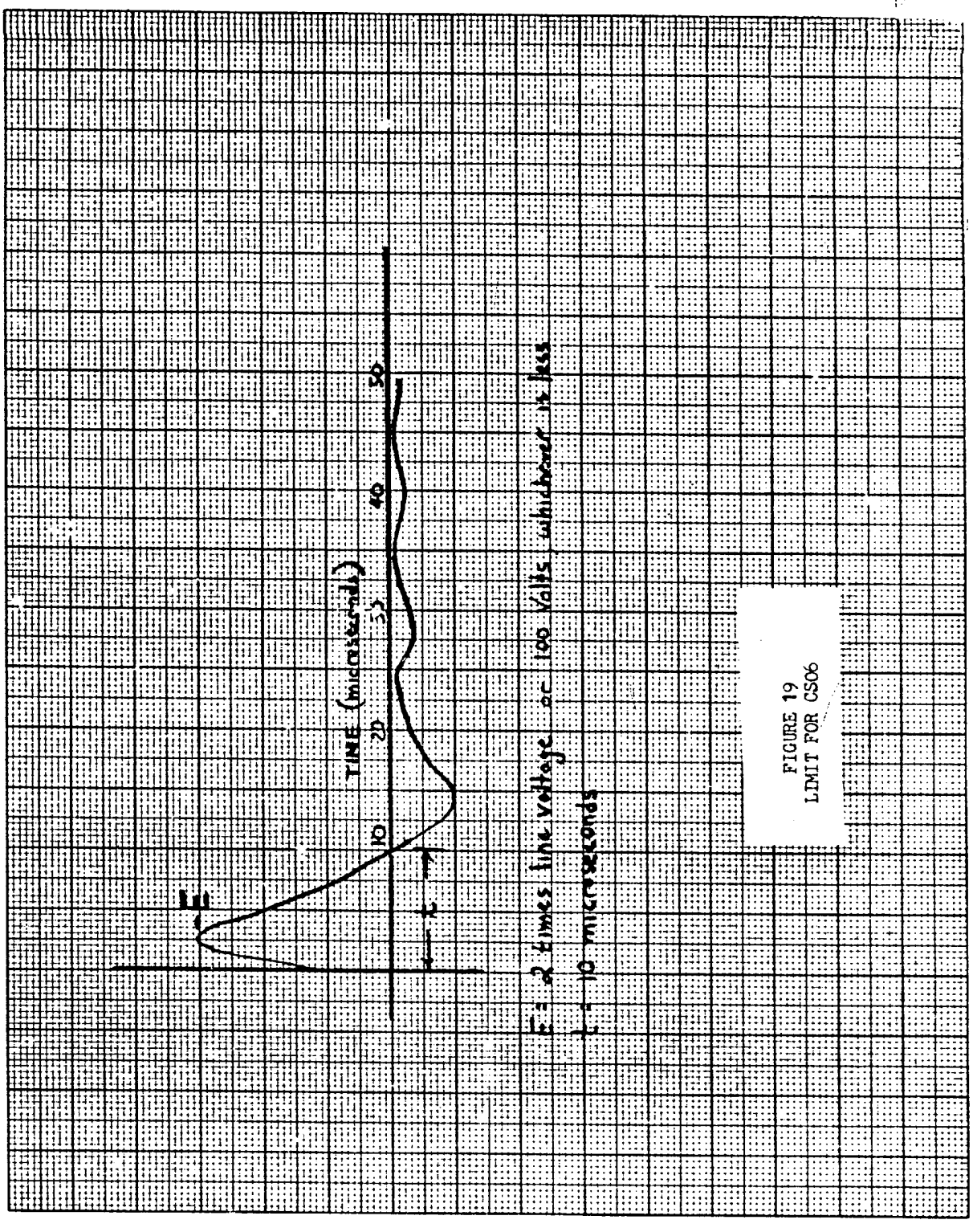

FIGURE 19
LIMIT FOR CS06

2454

Downloaded from http://www.everyspec.com

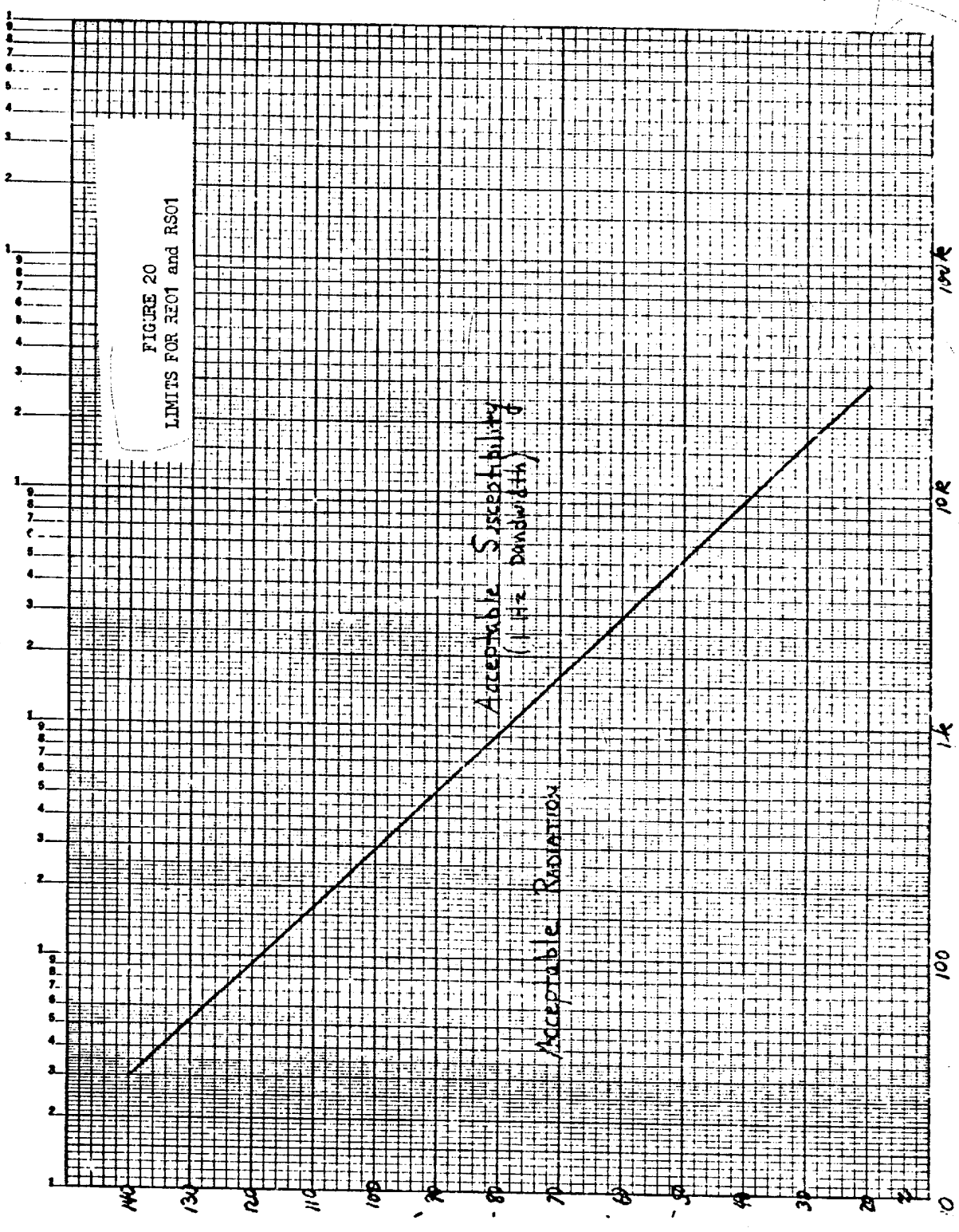

FIGURE 20
LIMITS FOR RE01 and RS01

2455-

Downloaded from http://www.everyspec.com

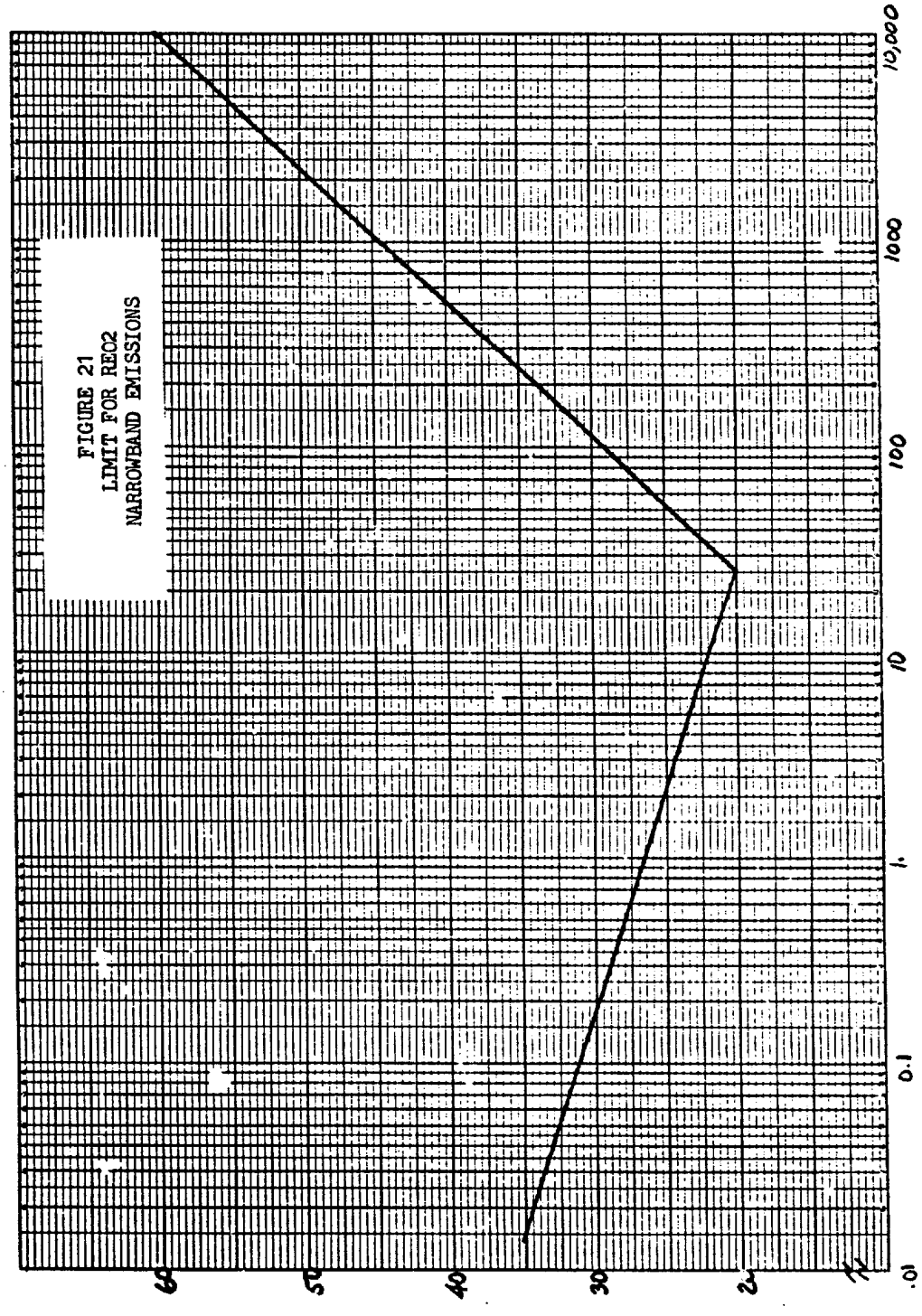

FIGURE 21
LIMIT FOR REO2
NARROWBAND EMISSIONS

2456

Downloaded from http://www.everyspec.com

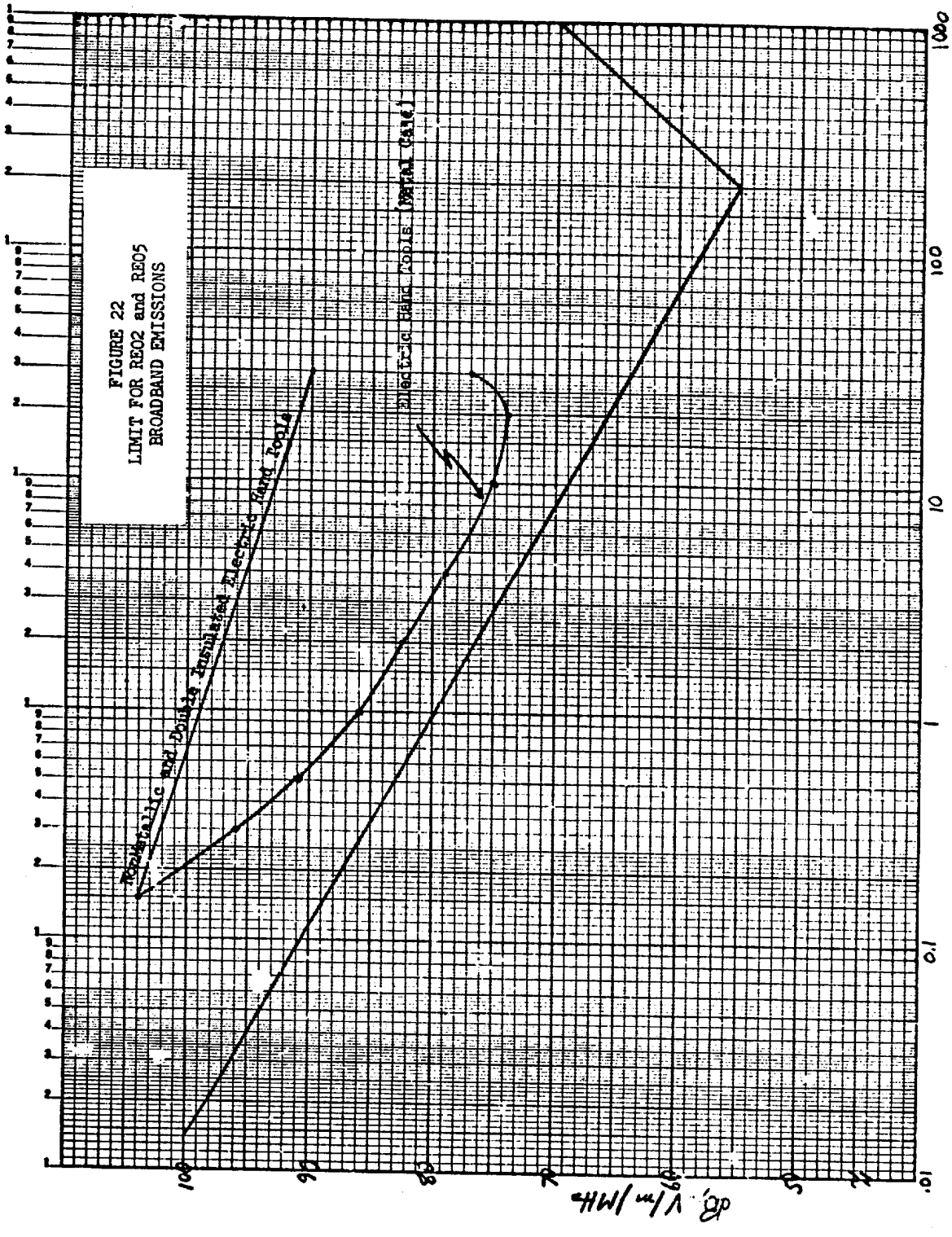

FIGURE 22
LIMIT FOR RE02 and RE05
BROADBAND EMISSIONS

2457

Downloaded from http://www.everyspec.com

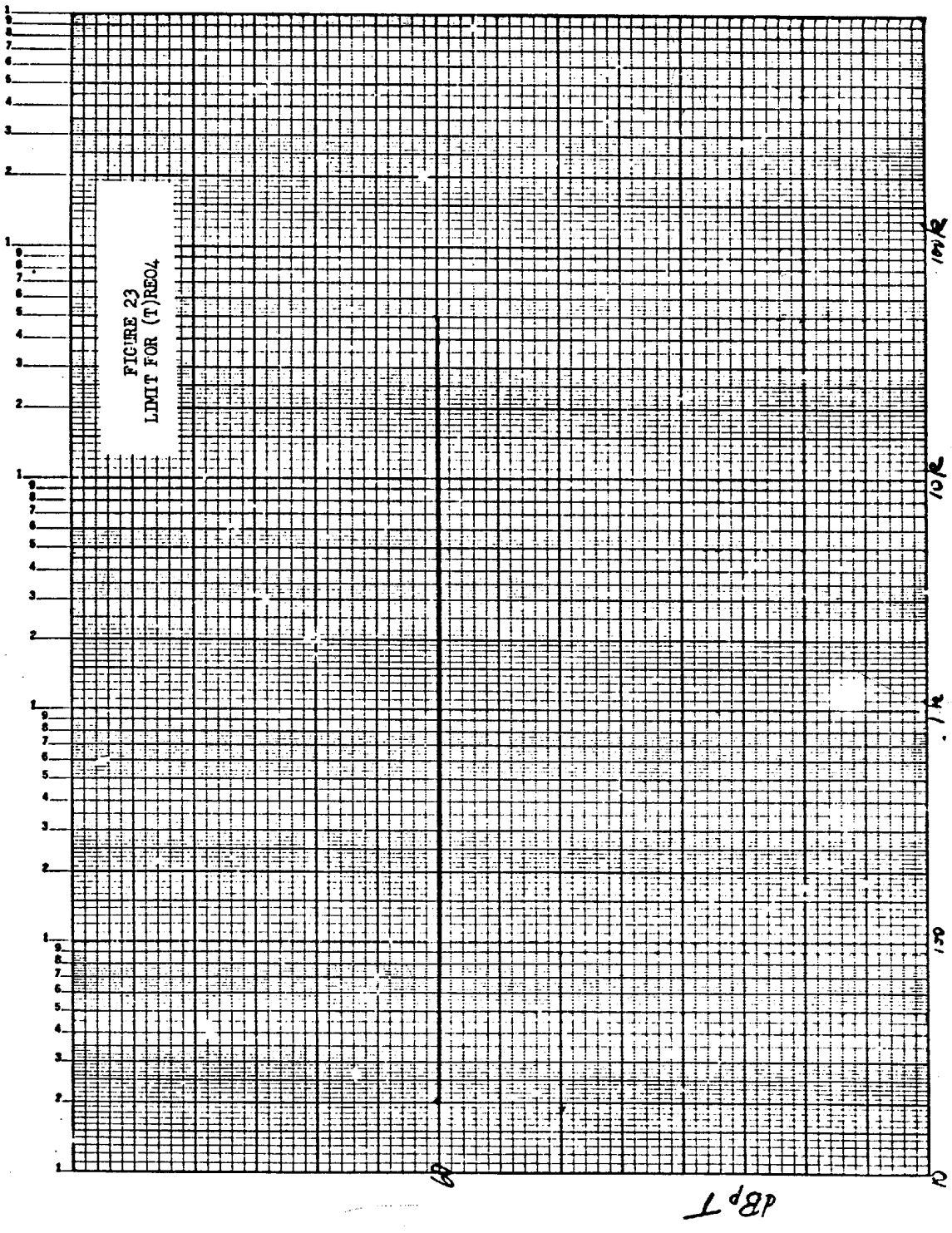

2458

Downloaded from http://www.everyspec.com

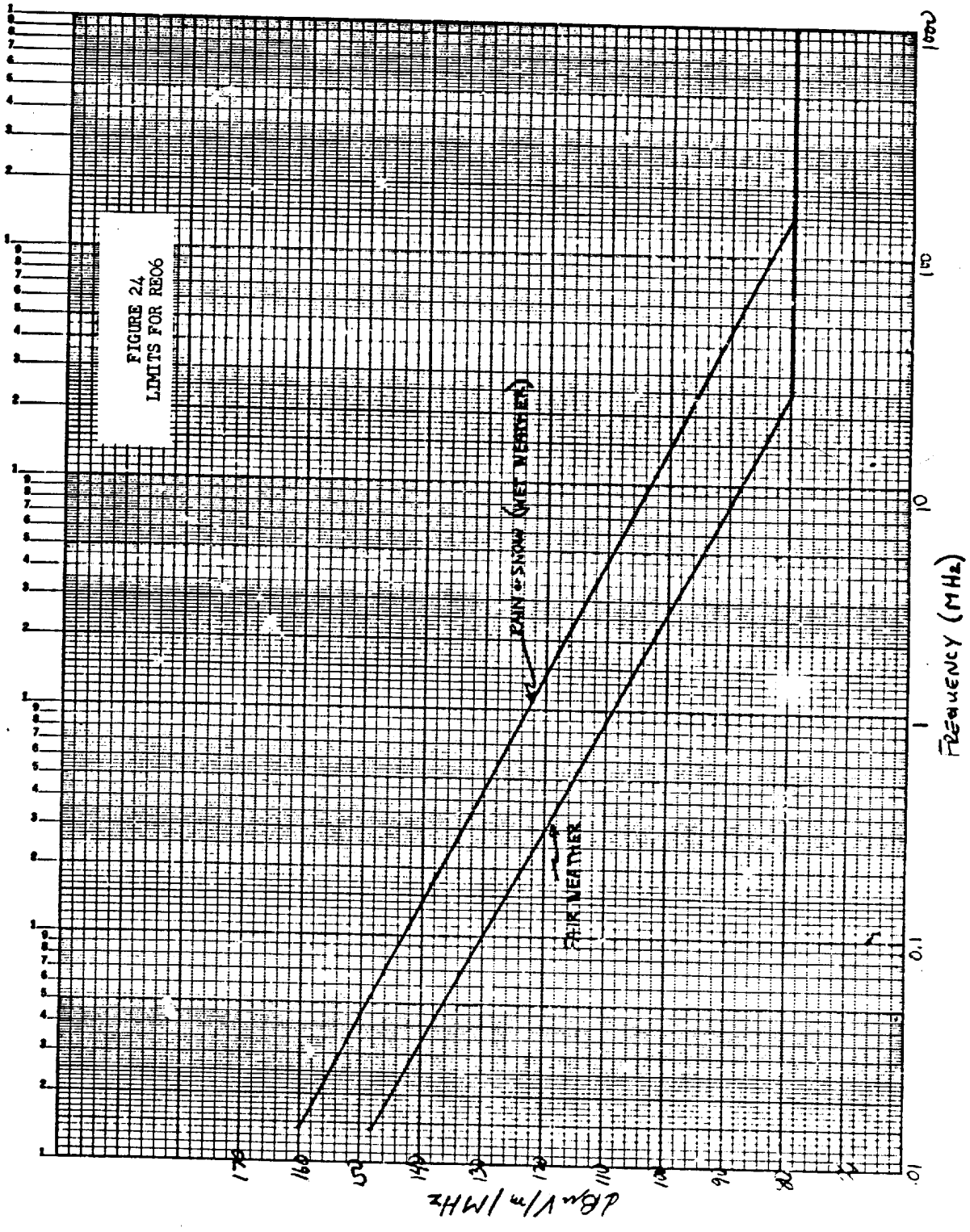

2459

Downloaded from http://www.everyspec.com

APPENDIX

REPROCUREMENTS OF EQUIPMENTS DESIGNED TO SUPERSEDED DOCUMENTS

10. GENERAL

10.1 This appendix shall be used to determine those requirements which shall be applied to reprocurements of production type equipment (all classes) which were originally procured prior to the effective date of MIL-STD-461 and MIL-STD-462 (31 July 1967) and which were certified to specifications or standards superseded by MIL-STD-461. Electromagnetic interference requirements based on superseded documents, can be selected by use of the tables contained in this appendix to determine equivalency with MIL-STD-461 requirements. Proper use of these tables will not impose additional requirements or constraints on a contractor.

20. TEST REQUIREMENTS

20.1 The tests which are applicable to reprocurements of production type equipment shall be determined by use of Tables A-I through A-V. After verification that a previously procured equipment had been certified to any of the superseded documents referenced herein, use of the appropriate table will indicate the equivalent requirements under MIL-STD-461. In those instances where it is not known which superseded document was used as the previous requirement, any of the tables having an equivalent equipment class may be used to determine the requirements applicable to the reprocurement.

20.2 Most of the tests applicable to reprocurements of production type equipment will be the same as the test procedures given in MIL-STD-462 and are indicated as such in the applicable table of this appendix. In those cases where the test procedure is not included in MIL-STD-462 the test method is included in this appendix. For this purpose the following test methods are included herein:

Method A-CE1 - Conducted Interference, Powerline - .150 to 65 MHz, LISN Method.

Method A-CE2 - Conducted Emission, Power Source Leads - 1.50 to 65 MHz, Coupling Block Method.

Method A-CS1 - Conducted Susceptibility, Powerline - .150 to 65 MHz, LISN Method.

30. LIMITS

30.1 The limits applicable to reprocurements of production type equipment are the same or less stringent than those in the original procurement, unless otherwise specified by the procuring activity. The notes to the tables included in this appendix indicate the appropriate limits.

40. TABLE OF REQUIREMENTS APPLICABLE TO SUPERSEDED DOCUMENTS

40.1 This section contains the tables for determining equivalency requirements to superseded documents.

TABLE A-I - MIL-E-55301

MIL-STD-461 Requirements Applicable to Reprocurements under MIL-E-55301

Test Method	Equipment Class				Description of Test	Notes
	CE	Tactical Non-CE	TS	AD		
CE01	N	N	N	N		
CE02	N	N	N	N		
CE03	N	N	N	N		
CE04	N	N	N	N		
CE05	N	N	N	N		
CE06	Y	N	N	N	Antenna terminal Conducted Interference	(1, 2, 3)
CS01	Y	N	N	N	Powerline Conducted Susceptibility	(1, 4)
CS02	N	N	N	N		
CS03	N	N	N	N		
CS04	N	N	N	N		
CS05	N	N	N	N		
CS06	Y	N	N	N	Transient Susceptibility	(1)
CS07	N	N	N	N		
CS08	Y	N	N	N	Narrowband rejection	(1, 6, 20)
RE01	N	N	N	N		
RE02	Y	Y	Y	Y	Case & Cable radiation leakage	(7, 8, 9, 17, 12)
RE03	Y	N	N	N	Spurious, Emissions 10Khz to 40 GHZ	(3)
RE04	N	N	N	N		
RE05	N	N	Y	Y	Radiated interference	(7, 9, 10, 11, 12, 17)
RE06	N	N	N	N		
RS01	N	N	N	N		
RS02	N	N	N	N		
RS03	Y	N	N	N	Case & Cable leakage susceptibility	(1)
RS04	N	N	N	N		
A-CE1	Y	N	N	N	Conducted interf, powerline LISN meth.	(13, 17)
A-CE2	N	Y	N	N	Conducted Emission, Coupling Block Meth.	(14, 17)
A-CS1	Y	N	N	N	Conducted suscept, powerline, LISN	(15)

Y = Test shall be performed as described in MIL-STD-462 and this Appendix
N = Test does not have to be performed, unless required by the equipment specification.
CE= Communication-Electronic Equipment
Non-CE = Non-Communication-Electronic Equipment
TS= Tactical support (Non-CE)
AD= Administrative Equipment

2461
250

Downloaded from http://www.everyspec.com

TABLE A-II - MIL-I-11748

MIL-STD-461 Requirements Applicable to Reprocurements under MIL-I-11748

Test Method	Equipment Class									Description of Tests	Notes
	I			II		III					
	a	b	c	a	b	a	b	c	d		
CE01	N	N	N	N	N	N	N	N	N		
CE02	N	N	N	N	N	N	N	N	N		
CE03	N	N	N	N	N	N	N	N	N		
CE04	N	N	N	N	N	N	N	N	N		
CE05	N	N	N	N	N	N	N	N	N		
CE06	Y	Y	N	N	N	N	N	N	N	Ant. Terminal Conducted interference	(1, 21, 23)
CS01	N	N	N	N	N	N	N	N	N		
CS02	N	N	N	N	N	N	N	N	N		
CS03	N	N	N	N	N	N	N	N	N		
CS04	N	N	N	N	N	N	N	N	N		
CS05	N	N	N	N	N	N	N	N	N		
CS06	N	N	N	N	N	N	N	N	N		
CS07	N	N	N	N	N	N	N	N	N		
CS08	Y	N	N	N	N	N	N	N	N	Ant. Term Suscep (front-end rej)	(16)
RE01	N	N	N	N	N	N	N	N	N		
RE02	Y	Y	Y	N	Y	Y	Y	Y	Y	Case & Cable radiation	(7, 8, 19, 24, 25, 26)
RE03	N	Y	N	N	N	N	N	N	N	Spurious Emissions 10 KHz to 40 GHZ	(21)
RE04	N	N	N	N	N	N	N	N	N		
RE05	N	N	N	N	N	N	N	N	N		
RE06	N	N	N	N	N	N	N	N	N		
RS01	N	N	N	N	N	N	N	N	N		
RS02	N	N	N	N	N	N	N	N	N		
RS03	Y	Y	Y	N	N	N	N	N	N	Radiated (case leakage)	(1, 5)
RS04	N	N	N	N	N	N	N	N	N		
A-CE1	Y	Y	Y	Y	Y	Y	Y	N	N	Conducted interf, powerline, LISN meth.	(13, 19)
A-CE2	N	N	N	N	N	N	N	N	N		
A-CS1	Y	Y	Y	N	N	N	N	N	N	Conducted suscep, powerline, LISN meth.	(15)

Y - Test shall be performed as described in MIL-STD-462 and this appendix
N - Test does not have to be performed unless required by the equipment specification

Definition of Equipment Classes continued on next page

Downloaded from http://www.everyspec.com

Downloaded from http://www.everyspec.com

Definition of Equipment Classes

TABLE A-II (Continued)

Class I

Equipment for generating, amplifying, transmitting, receiving or utilizing radio frequency electrical energy, within the frequency range covered by this document, for purposes of comunication in any form by wire or radio methods, or for test or maintenance of such communication equipment.

a. All types of radio frequency receiving equipment, including nevigation, telemetering, transpoders, radar, fire-con trol, guidance, and so forth.

b. All types of radio frequency transmitting equipment for communication and communication test purposes, including transmitters proper and any elements thereof such as R-F power amplifiers, exciters, pulse generators, modulators and so forth, which could generate, amplify, transfer, or emit interference generated within itself or in another element of a transmitter.

c. Test equipment for communication equipment, generating or utilizing radio frequency energy, but not intended to radiate.

Class II

Equipment for generating, amplifying, controlling or utilizing radio frequency energy for purposes other than those covered by Class I, and of which any of the fundamental or other output falls within the frequency range covered by this document. This includes medical diathermy and electrosurgical equipment, R-F induction and dielectric heating equipment, R-F stabilized arc welders, and so forth.

a. Equipment of this class which meets all requirements of the FCC at the time of request for bids, regarding frequency and bandwidth of the output fundamental for unlicensed operation of industrial, scientific, and medical equipment.

b. Equipment of this class which does not meet the FCC requirement referred to in a above.

Class III

Equipment capable of unintentionally generating radio frequency energy while utilizing mechanical or non-radio frequency electric power in the performance of its intended function.

a. Equipment of this class which is a component of, supplied power to, or is used in close association with, equipment of Classes I-a, b and c, such as: generators, dynamotors, rectifiers, blowers: also lighting, heating, air conditioning, and ventilation equipment used in communication shelters, and so forth.

b. Tactical support (field) equipment, such as: photographic, mapping, and reproduction equipment; Medical Corps equipment for field use (except that falling in Class II) including dental drills, suction pumps, and so forth.

c. Electrically driven tools, maintenance and material handling equipment such as electric drills, compressors, mobile machine shop equipment, electric for-lift trucks and winches, and so forth.

d. Kitchen equipment for field use such as refrigerators, electric appliances, and so forth and office machinery such as calculating machines, electric typewriters, duplicating equipment, and so forth.

24630

TABLE A-III MIL-S-10379

MIL-STD-461 Requirements Applicable to Reprocurements under MIL-S-10379A

Test Method	Perform	Description of Test	Notes
CE01	N		
CE02	N		
CE03	N		
CE04	N		
CE05	N		
CE06	N		
CS01	N		
CS02	N		
CS03	N		
CS04	N		
CS05	N		
CS06	N		
CS07	N		
CS08	N		
RE01	N		
RE02	N		
RE03	N		
RE04	N		
RE05	Y	Radiated interference	(1)
RE06	N		
RS01	N		
RS02	N		
RS03	N		
RS04	N		
A-CE1	N		
A-CE2	Y	Conducted emission, coupling block method	(14, 17)
A-CS1	N		

Y - Test shall be performed as described in MIL-STD-462 and this Appendix
N - Test does not have to be performed unless required by the equipment specification

2464
61
E-5

Downloaded from http://www.everyspec.com

TABLE A-IV MIL-I-16910C

MIL-STD-461 Requirements Applicable to Reprocurements under MIL-I-16910C

Test Method	Equipment Class				Description of Test	Notes
	SB-1	SS-1	SB-2	SS-2		
CE01	N	N	N	N		
CE02	N	N	N	N		
CE03	N	N	N	N		
CE04	N	N	N	N		
CE05	N	N	N	N		
CE06	Y	Y	N	N	Transmitter key-up & rec'v'r. osc. interf.	(27)
CS01	N	N	N	N		
CS02	N	N	N	N		
CS03	N	N	N	N		
CS04	N	N	N	N		
CS05	N	N	N	N		
CS06	N	N	N	N		
CS07	N	N	N	N		
CS08	Y	Y	N	N	Spurious responses	(28, 29)
RE01	Y	Y	Y	Y	Magnetic field emission	(1, 17, 18, 30, 31, 32)
RE02	Y	Y	Y	Y	Electric field emission	(7, 17, 18, 33, 34, 35)
RE03	N	N	N	N		
RE04	N	N	N	N		
RE05	N	N	N	N		
RE06	N	N	N	N		
RS01	Y	N	N	N	Magnetic field susceptibility	(1)
RS02	N	N	N	N		
RS03	Y	Y	N	N	Electric field susceptibility	(36)
RS04	N	N	N	N		
A-CE1	Y	Y	Y	Y	Conducted emission	(13, 17, 37)
A-CE2	N	N	N	N		
A-CS1	N	N	N	N		

Y = Test shall be performed as described in MIL-STD-462 or approved test plan.
N = Test does not have to be performed unless required by the equipment specification.
SB-1 = Electronic equipment for submarines.
SS-1 = Electronic equipment for all surface ships and shore sites.
SB-2 = Electrical equipment for submarines.
SS-2 = Electrical equipment for all surface ships and shore sites.

Downloaded from http://www.everyspec.com

TABLE A-V - MIL-I-17623A and MIL-I-43121A

MIL-STD-461 Requirements Applicable to Reprocurements under MIL-I-17623A and MIL-I-43121A

Test Method	MIL-I-17623A	MIL-I-43121A	Description of Test	Notes MIL-I-17623A	Notes MIL-I-43121A
CE01	N	N			
CE02	N	N			
CE03	N	N			
CE04	N	N			
CE05	N	N			
CE06	N	N			
CS01	N	N			
CS02	N	N			
CS03	N	N			
CS04	N	N			
CS05	N	N			
CS06	N	N			
CS07	N	N			
CS08	N	N			
RE01	Y	N	Magnetic field emission	(1, 17, 18, 32, 38)	
RE02	Y	Y	Electric field emission	(7, 17, 18, 22, 33, 37)	(1, 37)
RE03	N	N			
RE04	N	N			
RE05	N	N			
RE06	N	N			
RS01	N	N			
RS02	N	N			
RS03	N	N			
RS04	N	N			
A-CE1	Y	Y	Conducted emission	(13, 17, 37)	(13, 37)
A-CE2	N	N			
A-CS1	N	N			

Y - Test shall be performed as described in MIL-STD-462 or approved test plan.
N - Test does not have to be performed unless required by the equipment specification.

Downloaded from http://www.everyspec.com

Downloaded from http://www.everyspec.com

TABLE A-IV – MIL-I-6181

(This table will be included in a future revision.)

2497

Downloaded from http://www.everyspec.com

Table A-VII - MIL-STD-826

(This table will be included in a future revision.)

2668

Downloaded from http://www.everyspec.com

Notes for Tables A-I through A-VII:

(1) Use limits of MIL-STD-461.
(2) Increase the limit of MIL-STD-461 by 6 dB for narrowband emissions on transmitters in standby and receiver local oscillator radiations.
(3) The following limits shall be applied for transmitters in key-down or transmit condition.

(a) The second and third harmonics of the output fundamental shall be down at least 60 dB from the fundamental output power
(b) All spurious outputs and harmonics above the third shall be down at least 80 dB from the fundamental output power
(c) Transmitters whose fundamental power output is less than 1 watt are exempt from this requirement
(d) Test shall be performed from 0.014 MHz to 0.9 f_0 and from 1.1 f_0 to 10 f_0 or 1000 MHz, whichever is higher for transmitters. Receivers shall be tested from 0.014 MHz to the twentieth harmonic or 1000 MHz whichever is higher. Use Method RE03 for transmitters operating above 12.4 GHz.

(4) Perform over the frequency range of 50 to 15,000 Hz.
(5) Decrease the limit of MIL-STD-461 by 20 dB.
(6) Perform from 0.1 f_0 or the IF in use, whichever frequency is lower, up to 10 f_0, but not over 12,000 MHz.
(7) Use RE02 limits of MIL-STD-461 as adjusted by the applicable curve of Figure A-1.
(8) Radiated emissions in the frequency range of 25 to 200 MHz shall be measured with the biconical antenna in vertical polarization only.
(9) The test distance for tactical support equipment shall be increased to twenty (20) feet.
(10) Applied to engine generators not exceeding 60 KVA, or 500 volts a.c. or d.c., and supplying power to, or closely associated with C-E equipment.
(11) Administrative vehicles shall comply with the requirements of SAE-J551.
(12) The test distance for administrative equipment shall be increased to fifty (50) feet.
(13) Use test method and limits of A-CE1.
(14) Use test method and limits of A-CE2.
(15) Use test method and limits of A-CS1.
(16) The limit for rejection of spurious responses shall be 60 dB outside the 80 dB down points on the receiver selectivity curve. Perform from .1 f_0 to 10 f_0, but not less than .014 MHz or higher than 36,000 MHz.
(17) Emissions having a duration not exceeding 1 second and a recurrence rate not exceeding once in 3 minutes are exempt.
(18) One of the following short duration exemptions for emissions from "sub-marines and wooden-hull ships and shore and above deck" non-portable equipments shall be applied:

(a) For impulsive interference with a repetition rate of not more than 10 p.p.s., the limits shall be raised by 2 times or 6 dB.
(b) For interference of less than one second duration occuring not more than once every 30 seconds, the limits shall be raised by 10 times or 20 dB.

(19) For non-C-E equipments, deviations permitted as follows:

Maximum duration	Maximum recurrence	Deviation permitted
One (1) second	Once in three (3) minutes	20 dB
three (3) seconds.	Twice per normal operational period	No limitation

(Approval shall be obtained from the procuring activity before using these deviations)

(20) The limit for rejection of spurious responses outside the receiver selectivity curve shall be 60 dB.
(21) The following limits shall apply for transmitters in key down mode.

(a) The second and third harmonics of the output fundamental shall be down at least 60 dB from the fundamental output power.

2669

Downloaded from http://www.everyspec.com

Notes for Tables A-I through A-VII (cont'd.)

(b) All spurious outputs and harmonics above the third shall be down at least 80 dB from the fundamental output power.
(c) Tests shall be performed from 0.014 MHz to 0.8 f_o and from 1.2 f_o to 10 f_o or 36 GHZ whichever is less. Use method RE03 for transmitters operating above 12.4 GHz.

(22) Test is optional in the frequency range of 30 to 1000 MHz.
(23) Narrowband emissions shall be limited to -64 dBMW at the antenna terminals of receivers or transmitters in the key-up mode.
(24) For Class IIb (MIL-I-11748) equipment the minimum test distance shall be one hundred (100) feet.
(25) For Class IIIb and IIIc (MIL-I-11748) equipments the minimum test distance shall be twenty (20) feet.
(26) For Class IIId (MIL-I-11748) equipments the minimum test distance shall be fifty (50) feet.
(27) This test is applicable to transmitters in the "key-up" mode and to receivers. Transmitters in the "key-up" mode shall not exhibit any interference in excess of 400 uuW at the antenna terminals. Receivers shall not exhibit any oscillator interference in excess of 400 uuW at the antenna terminals.
(28) This test is applicable only over the frequency range of 14 kHz to 1000 MHz.
(29) Spurious response limit: no change in indication, malfunction or degradation of performance shall be produced in any receiver when a signal of 100,000 uV is applied to the antenna terminals. The selectivity band about the tuned receiver frequency is exempt from this requirement.

(30) For Class SB-1 and SB-2 equipments: (a) this test is mandatory up to a frequency of 30 kHz; (b) in the frequency range of 30 to 150 kHz this test is optional (use 30 inch loop antenna for this range).
(31) For Class SS-1 and SS-2 equipments: (a) this test is not applicable from .03 to 30 kHz; (b) in the frequency range of 14 to 150 kHz this test is optional (use 30 inch loop antenna for this range).
(32) The limits above 30 kHz are obtained by extending the limit curve of MIL-STD-461 using the same slope to 150 kHz.
(33) Above 30 MHz use biconical antenna in horizontal polarization only.
(34) For SB-1 and SS-1 equipments: (a) this test is mandatory below 1000 MHz; (b) this test is optional from 1000 to 10,000 MHz.
(35) For SB-2 and SS-2 equipments this test is applicable only up to 30 MHz.
(36) Limits are as determined by Figure A-2.
(37) Test shall be performed only in the frequency range of .15 to 30 MHz.
(38) Not required below 14 kHz. Test is optional between 14 and 150 kHz (above 30 kHz use 30 inch loop antenna).

Downloaded from http://www.everyspec.com

FIGURE A-1a: MIL-E-55301 and MIL-I-11748

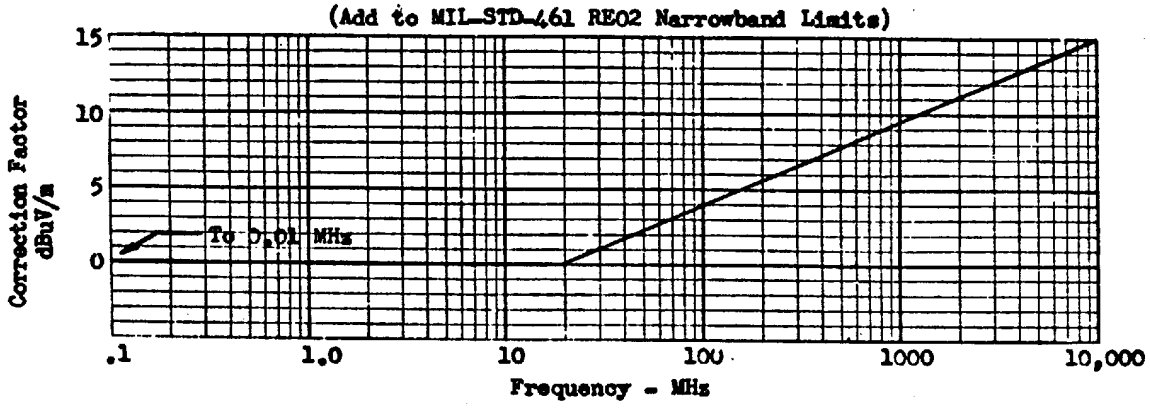

FIGURE A-1b: MIL-E-55301 and MIL-I-11748

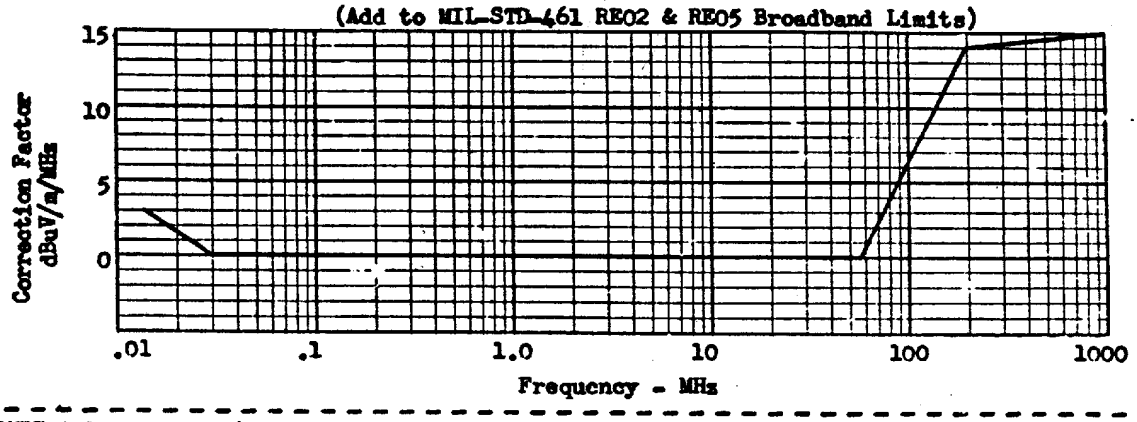

FIGURE A-1c: MIL-I-16910C and MIL-I-17623A

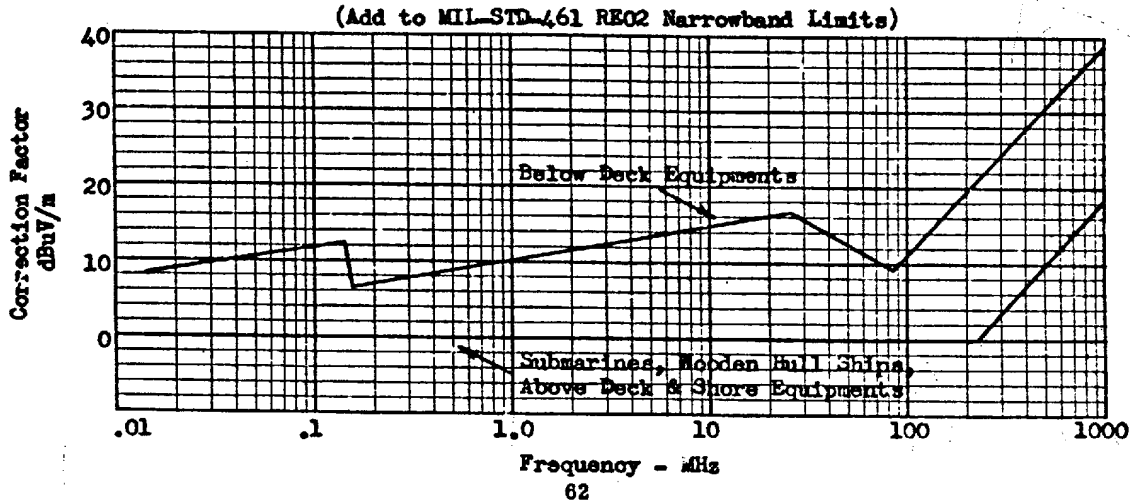

Downloaded from http://www.everyspec.com

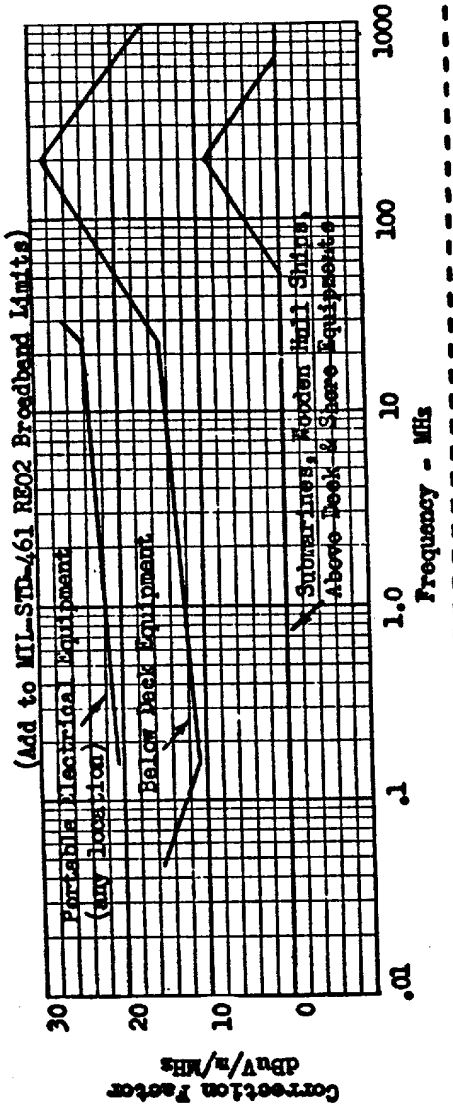

FIGURE A-1d: MIL-I-16910C and MIL-I-17623A

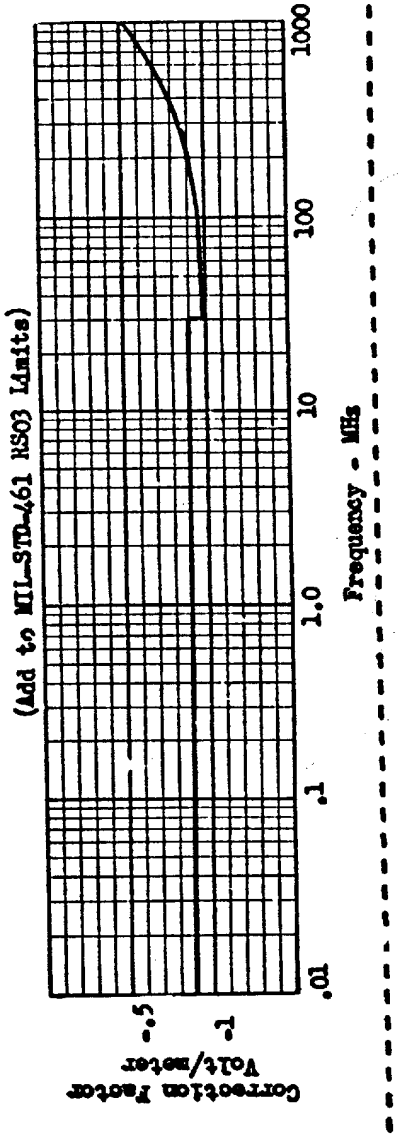

FIGURE A-2: MIL-I-16910C

Downloaded from http://www.everyspec.com

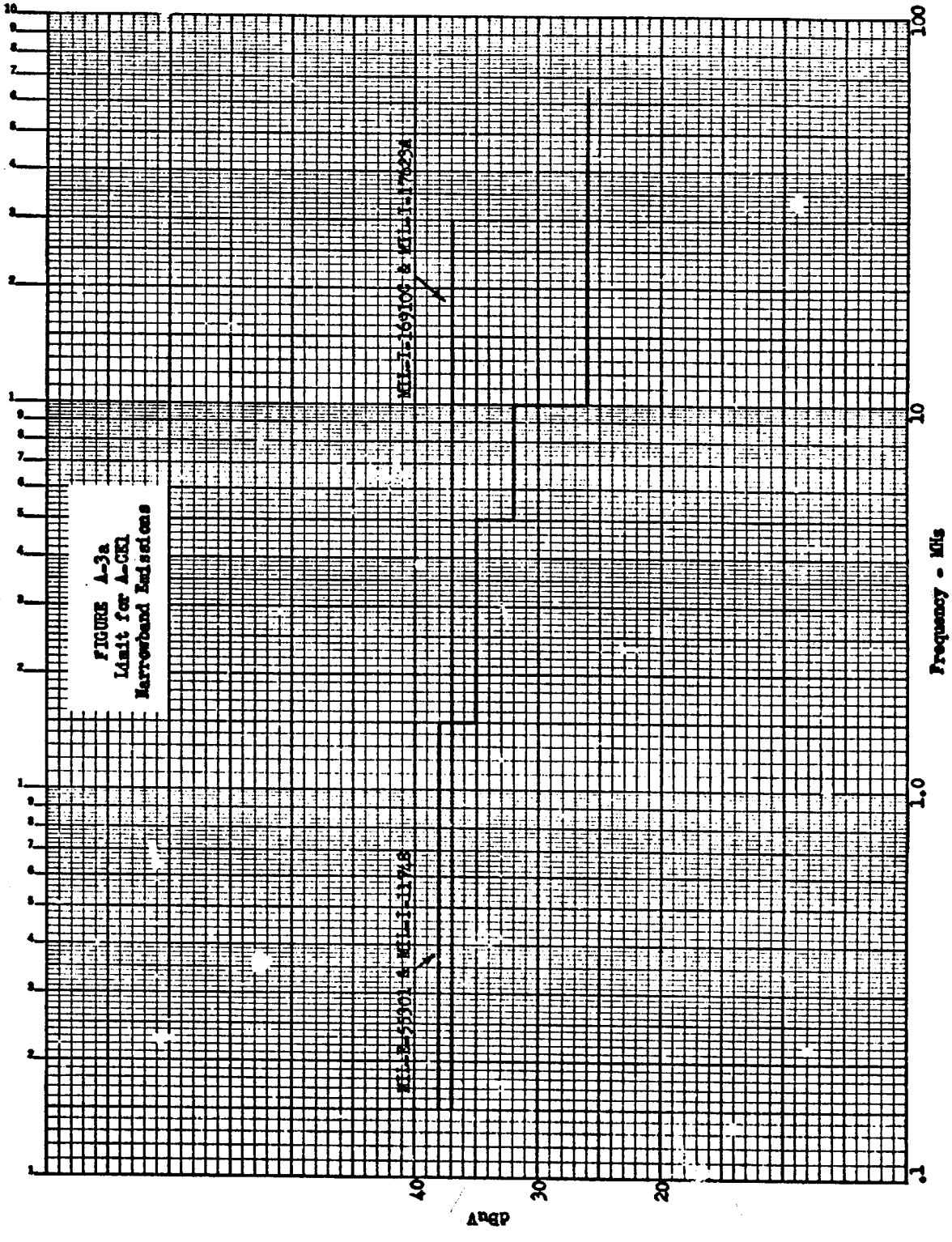

2473

Downloaded from http://www.everyspec.com

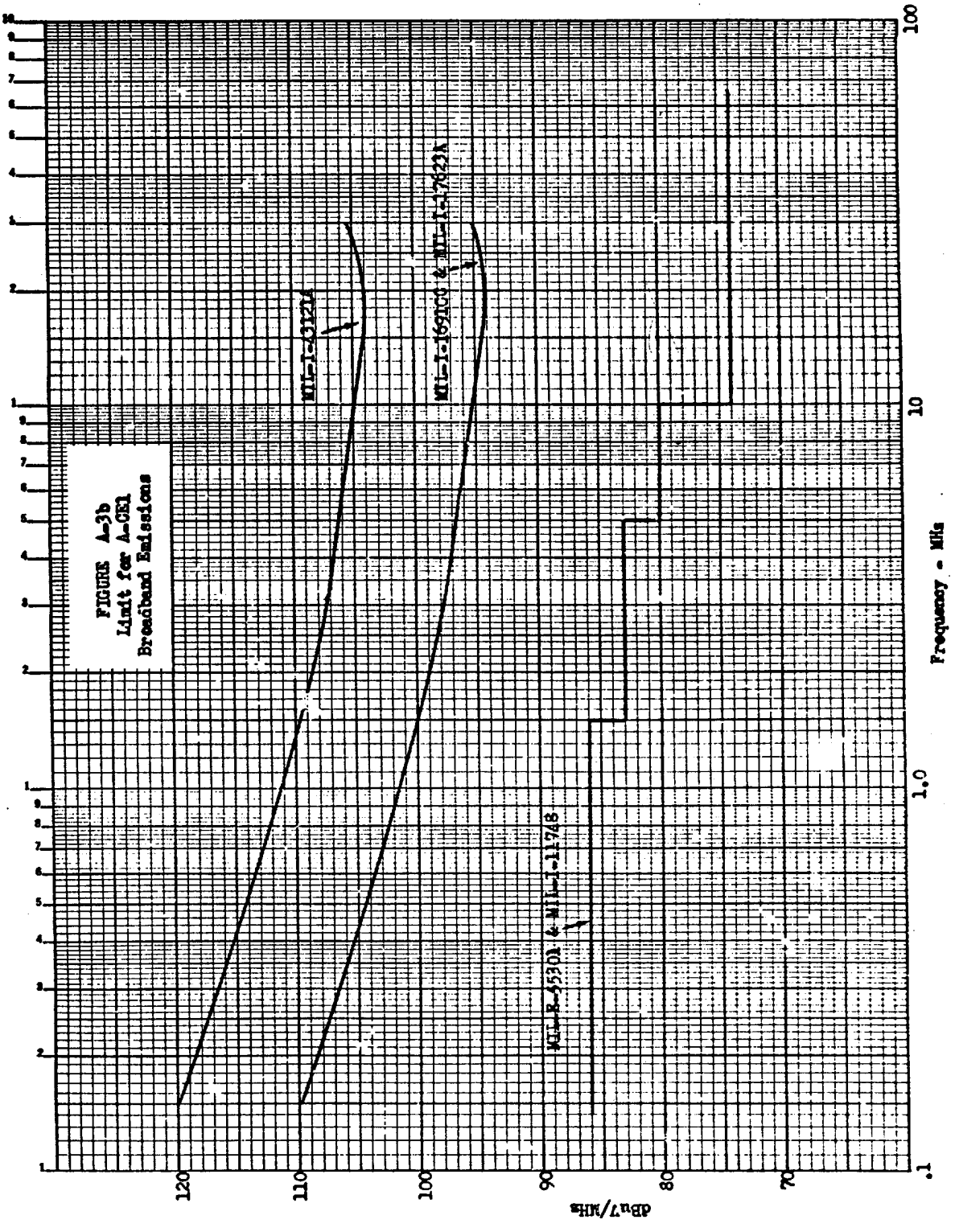

2474

Downloaded from http://www.everyspec.com

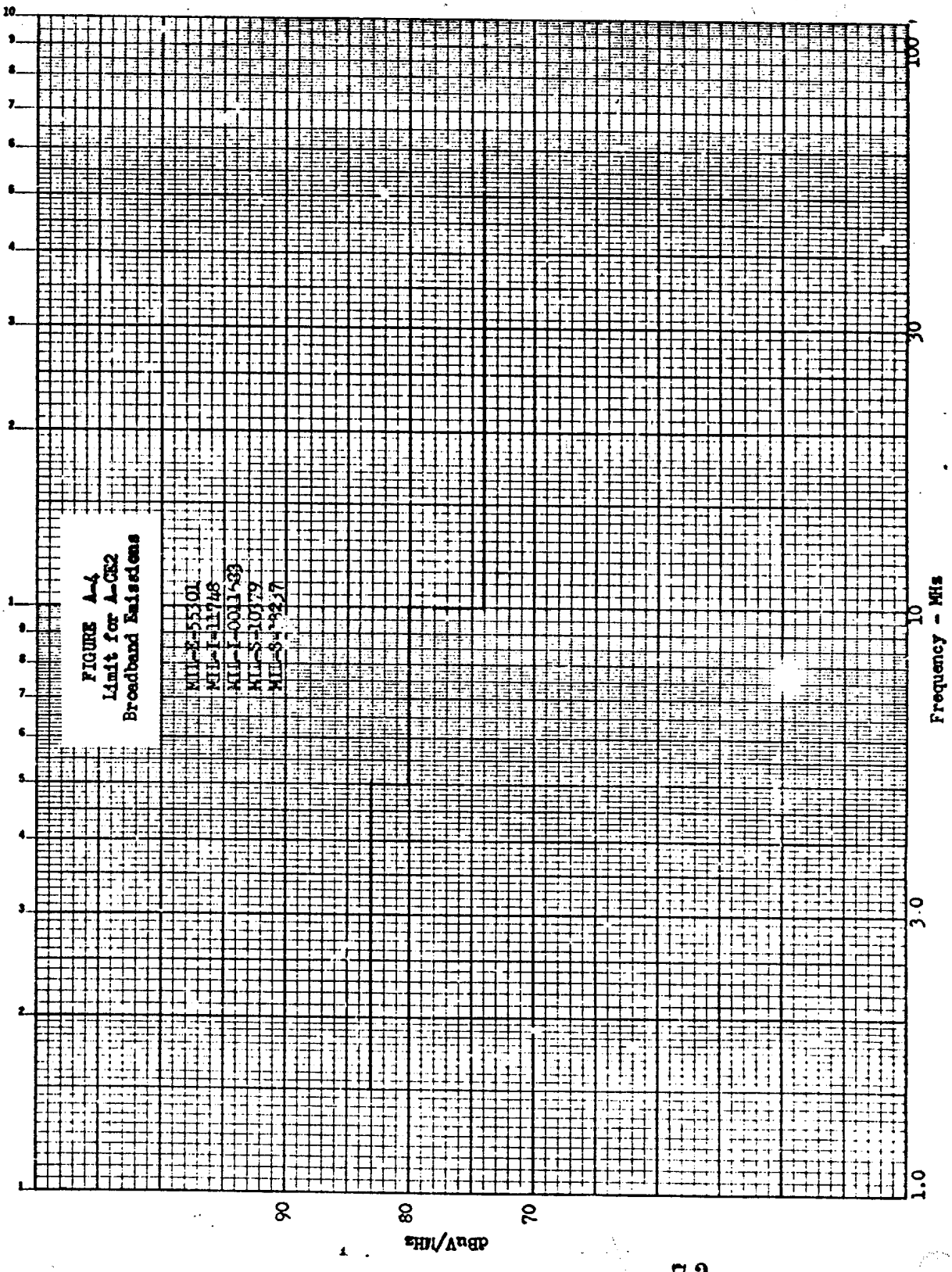

2475

Downloaded from http://www.everyspec.com

50. ADDITIONAL TEST METHODS

50.1 This section contains those test procedures used in the superseded documents that are not included in MIL-STD-461/462. Tests contained herein are prefixed with an "A".

Downloaded from http://www.everyspec.com

Method A-CE1

Conducted Interference, Powerline -.150 to 65 MHz, LISN Method

1. Purpose. - This method is used for measuring conducted emissions on all power leads.
2. Applicability. - This test method is applicable for measuring conducted emissions in the frequency range of .150 to 65 MHz on A.C. and D.C. power leads for all electronic and electro-mechanical equipment except engine generators and vehicles.
3. Apparatus. - The test apparatus shall include the following:

   a. Line impedance stabilization networks (impedance characteristics per Figure A-CE1-2).
   b. 50 ohm resistive terminations (VSWR not greater than 1.3 at frequencies of concern).
   c. Isolation transformer

4. Test Procedure. - The test setup shall be as shown in Figure ACE1-1. Conducted emissions, both narrowband and broadband, shall be measured on all A.C. and D.C. power input and output leads, including neutrals which are grounded externally to the equipment. Bonding straps do not have to be measured. The limits of Figures A-3a and b shall apply.

Downloaded from http://www.everyspec.com

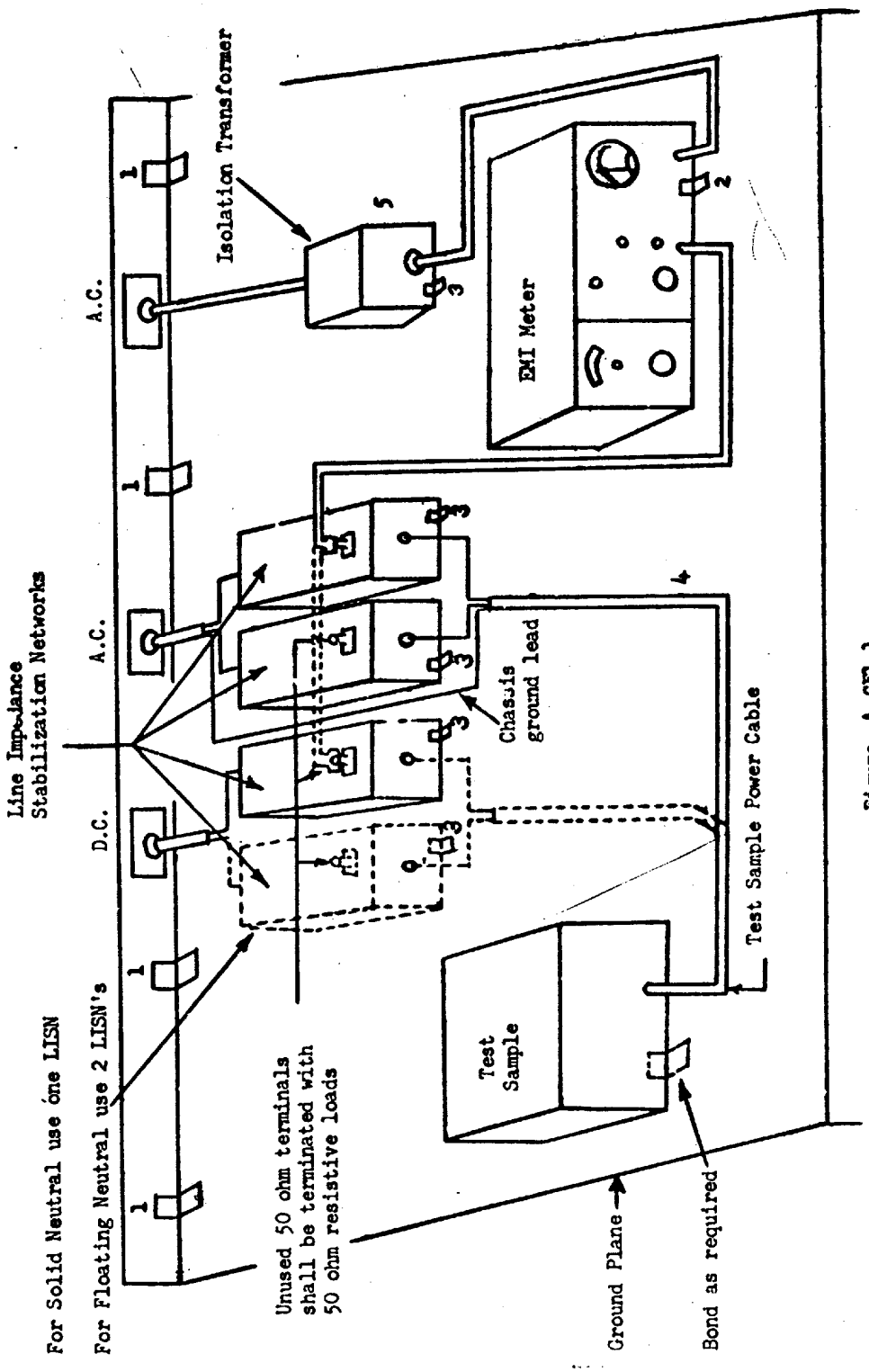

Figure A-CE1-1

Typical Test Setup for Measurement of Conducted Interference on Powerlines, LISN Method

2478

Downloaded from http://www.everyspec.com

Notes - Figure ACE1-1

1. The D.C. bond impedance between the ground plane and enclosure shall not exceed 2.5. milliohms.
2. The EMI meter shall be bonded to the ground plane at one point only. The chassis ground lead shall be broken.
3. Line impedance stabilization networks and isolation transformer shall be bonded to the ground plane.
4. The minimum separation between cables, leads and ground plane shall be 5 CM.
5. When possible, the test sample and EMI measuring instrumentation shall derive their power from two separate phases of the A.C. power source. The purpose of this is to provide additional isolation between the test sample and measuring instrumentation through the enclosure's power line filters.

CAUTION: Be sure all test instrumentation is properly bonded to the ground plane before applying power to prevent a potential shock hazard to personnel.

2479

Downloaded from http://www.everyspec.com

Figure A-CE1-2

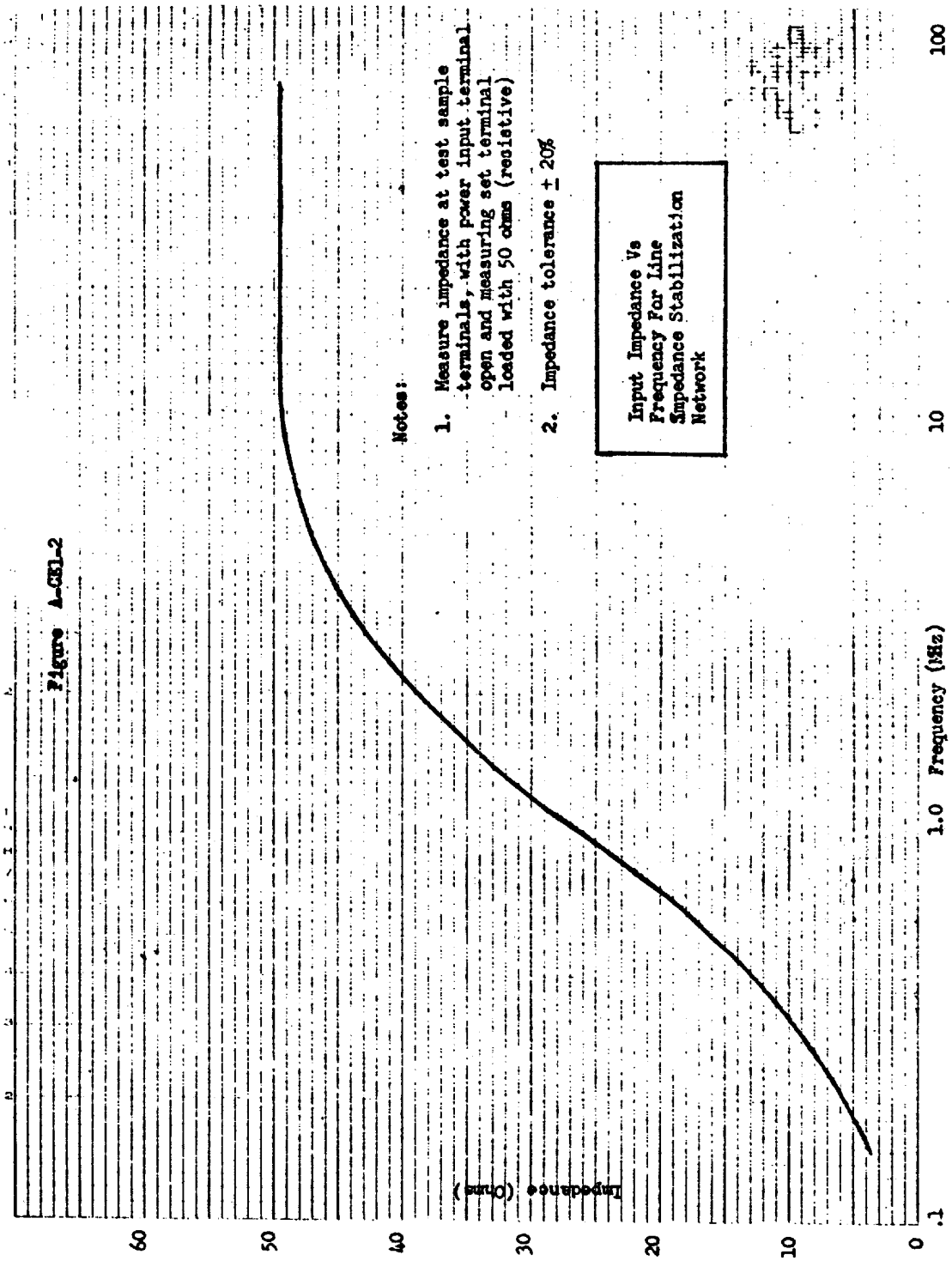

Notes:

1. Measure impedance at test sample terminals, with power input terminal open and measuring set terminal loaded with 50 ohms (resistive)
2. Impedance tolerance ± 20%

Input Impedance Vs Frequency For Line Impedance Stabilization Network

2680

Downloaded from http://www.everyspec.com

METHOD A-CE2

Conducted Emission, Power Source Leads -1.50-65 MH_z, Coupling Block Method

1. Purpose. - This method is used for the purpose of measuring interference voltages conducted on power source lines and terminals under normal test sample operating and load conditions.

2. Applicability. - This method is applicable to measuring interference voltage on electric power input and output terminals of engine generators, vehicular electric terminal boxes, and other power generations, and conversion equipment where the nominal line voltage does not exceed 440 volts r. m. s. AC or 500 volts DC. The interference voltage to be measured is from each line to ground on grounded systems and from each line to neutral on ungrounded systems.

3. Apparatus. - The measuring equipment required is as follows.

(a) Interference measuring set having 50-ohm resistive input impedance over the frequency range required for the test, and the capability of measuring broadband interference.
(b) One each Coupler, Radio Frequency Interference, CU-891/URM-85.
(c) One each Coupler, Radio Frequency Interference, CU-896/URM-85.

4. Test Procedure. - The test setup shall be as indicated in Figure A-CE2-1. Measurements shall be made at normal operating load or simulated normal operating conditions, and, if applicable, at no load. The equipment shall be loaded electrically or mechanically, or both, as applicable. Engine generators shall be loaded at the output end of the load cable.

5. Caution. - Care shall be exercised that:

(a) The "ground" binding post terminal of the coupler is connected to the ground or neutral line of the power line or terminal box under test.
(b) The nominal voltage of the line under test does not exceed the ratings quoted above under "Applicability".
(c) The leads from the coupler binding post terminals to the line or terminal box are as short as possible, and insulated as necessary for safety. The higher the test frequency, the shorter is the permissible lead length.

6. Notes. -

6.1 Couplers CU-891/URM-85 and CU-UKM-85, when used with a 50-ohm measuring set, load the line to be measured with a 50-ohm rf impedance.

6.2 The CU-891 has a usable frequency range of 0.150 to 30 MH_z, and the CU-896, 20 to 1000 MH_z.

6.3 Couplers CU-892/URM-85 and CU-897/URM-85 are also available providing approximately 500-ohms rf load on the source. The former covers 0.150 to 30 MH_z, and the latter 20 to 1000 MH_z. They are used in the same manner and with the same precautions as the 50-ohm couplers. An approximation can be made of the magnitude of the rf impedance of the source being measured, by comparison of the readings made with a 500-ohm coupler against those made with the 50-ohm coupler of the same rated frequency range. This may be an aid in designing or choosing line filters for the particular application. The 500-ohm couplers have a 20-dB loss, which must be added to the instrument reading for a proper comparison against the reading taken with the 50-ohm coupler.

Downloaded from http://www.everyspec.com

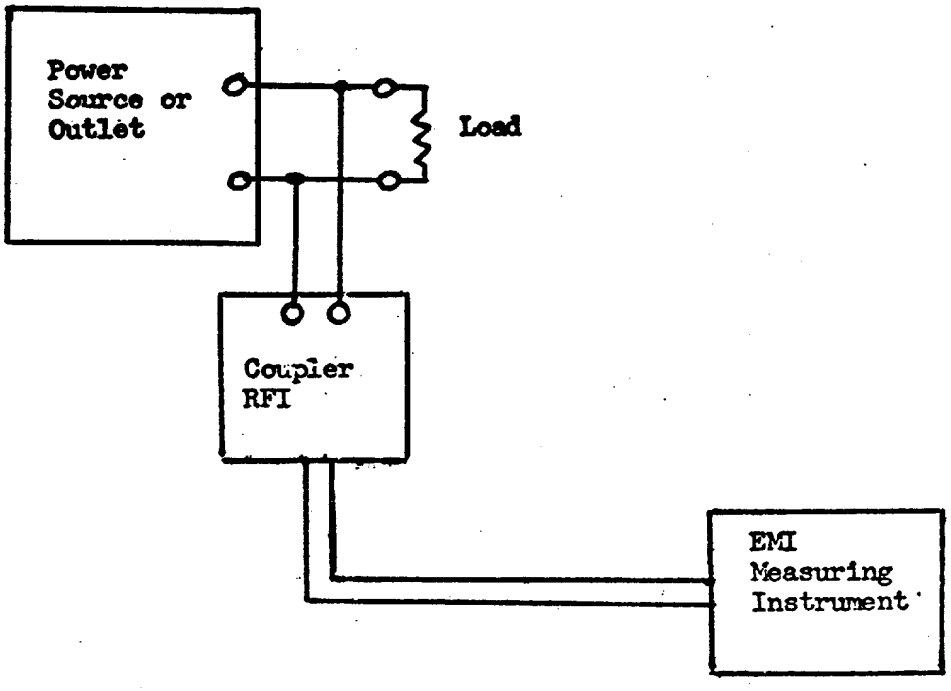

Figure A-CE2-1

Conducted Emission, Voltage Measurement

Coulping Block Method

2482

Downloaded from http://www.everyspec.com

METHOD A-CS1

Conducted Susceptibility, Powerline -.150 to 65 MHz, LISN Method

1. Purpose. - This method is used to determine whether communications-electronic (C-E) equipment is susceptible to electromagnetic energy injected on its power leads.

2. Applicability. - This test method is applicable for all communication electronic (C-E) equipment.

3. Apparatus. - The test apparatus shall include the following:

   a. Line impedance stabilization networks (impedance characteristics as per Figure A-CE1-2).
   b. 50 ohm rf resistive terminations (VSWR not greater than 1.3 at frequencies of concern).
   c. Signal source (nominal source impedance of 50 ohms).
   d. Impulse generator (frequency range of .150 to 1000 MHz - output of 100 dBuV/MHz).
   e. 50 ohm 6 db symmetrical pad.

4. Test Setup and Procedures. - The test setup for powerline conducted rf susceptibility shall be as shown on Figure ACE1-1 except that the signal source is substituted for the EMI measuring set at the coaxial connector of the appropirate LISN. When subjected to the following tests, no malfunction or degradation of CE equipment shall occur.

4.1 Narrowband Susceptibility. - The 50 ohm loaded output voltage of the CW generator shall be 0.1 volt. The frequency range of .150 to 65 MHz shall be scanned. Particular attention shall be given to the specific frequencies indicated by the test plan as being likely to exhibit susceptibility.

4.2 Broadband Susceptibility. - The impulse generator shall be terminated by a 50 ohm 6 dB resistive pad at the coaxial sampling terminal of the LISN. The output of the impulse generator with its specified termination shall be 90 dBuV/MHz.

*U.S. GOVERNMENT PRINTING OFFICE: 1968-343-222/632