NOTICE OF CHANGE

INCH-POUND

MIL-STD-348A
NOTICE 1
12 January 1990

MILITARY STANDARD

RADIO FREQUENCY CONNECTOR INTERFACES FOR

MIL-C-3643, MIL-C-3650, MIL-C-3655, MIL-C-25516, MIL-C-26637, MIL-C-39012, MIL-C-49142, MIL-A-55339, AND MIL-C-83517

TO ALL HOLDERS OF MIL-STD-348A:

1. THE FOLLOWING PAGES OF MIL-STD-348A ARE NEW OR HAVE BEEN REVISED AND SUPERSEDE THE PAGES LISTED:

NEW PAGE	DATE	SUPERSEDED PAGE	DATE
iii	12 January 1990	iii	20 April 1988
iv	12 January 1990	iv	20 April 1988
v	12 January 1990		
5	12 January 1990	5	20 April 1988
6	12 January 1990	6	20 April 1988
101.1	12 January 1990	101.1	20 April 1988
101.2	12 January 1990	101.2	20 April 1988
102.1	12 January 1990	102.1	20 April 1988
102.2	20 April 1988	102.2	REPRINTED WITHOUT CHANGE
201.1	12 January 1990	201.1	20 April 1988
201.2	12 January 1990	201.2	20 April 1988
201.3	12 January 1990	201.3	20 April 1988
202.1	12 January 1990	202.1	20 April 1988
202.2	20 April 1988	202.2	REPRINTED WITHOUT CHANGE
202.3	12 January 1990	202.3	20 April 1988
SECTION 300	12 January 1990	SECTION 300	20 April 1988
301.1	20 April 1988	301.1	REPRINTED WITHOUT CHANGE
309.2	20 April 1988	309.2	REPRINTED WITHOUT CHANGE
310.1	12 January 1990	310.1	20 April 1988
310.2	12 January 1990	310.2	20 April 1988
310.3	20 April 1988	310.3	REPRINTED WITHOUT CHANGE
313.3	12 January 1990		
313.4	12 January 1990		
317.1	12 January 1990	317.1	20 April 1988
317.2	12 January 1990	317.2	20 April 1988
319.1	12 January 1990	319.1	20 April 1988
319.2	12 January 1990	319.2	20 April 1988
320.1	12 January 1990		
320.2	12 January 1990		

321.1	12 January 1990		
321.2	12 January 1990		
321.3	12 January 1990		
322.1	12 January 1990		
322.2	12 January 1990		
404.3	20 April 1988	404.3	REPRINTED WITHOUT CHANGE
405.1	19 January 1990	405.1	20 April 1988

2. RETAIN THIS NOTICE AND INSERT BEFORE TABLE OF CONTENTS.

3. Holders of MIL-STD-348A will verify that page changes and additions indicated above have been entered. This notice page will be retained as a check sheet. This issuance, together with appended pages, is a separate publication. Each notice is to be retained by stocking points until the military standard is completely revised or canceled.

CONCLUDING MATERIAL

Custodian:
Army - CR
Navy - EC
Air Force - 85

Review activities:
Army - AT, AV, MI
Navy - AS, SH
Air Force - 10, 11, 17, 99
DLA - ES

User activities:
Navy - CG, MC
Air Force - 11

Preparing activity:
Army - CR

Agent:
DLA - ES

(Project 5935-3705)

CONTENTS

FIGURES

CONTENTS - Continued

CONTENTS - Continued

5. DETAILED REQUIREMENTS

5.1 Gauge tests. Applicable gauge tests shall be as specified in the associated connector specification sheet.

5.2 Marking. Not applicable.

5.3 Drawing notes. Unless otherwise specified, the following information is applicable to all figures of this military standard.

a. Dimensions are in inches.

b. Metric equivalents are given for general information only.

c. All undimensioned, pictorial configurations are for reference purposes only.

d. Applicable to section 400 only. The construction, material, and finish of the standard socket connector shall result in satisfactory electrical and mechanical performance and provide the following minimum life cycles when mated with the same series pin standard test connector.

Series	Life cycles
C, N, SC, TNC	10,000
BNC	5,000
SMA, SMB, SMC	2,000

e. Applicable to section 400 only. Dimensions shown are for the standard test connector only.

5.4 Change effectivity. Unless otherwise specified in the interface figure, all changes from the preceding issue of MIL-STD-348 will become effective 12 months from the date of this standard notice.

5.5 Disposition of stock. Unless otherwise specified in the interface figure, qualified manufacturers and their selling agents or distributors may ship from stock connectors which were manufactured in accordance with the preceding issue of MIL-STD-348 for a period of 30 months from this date of this standard notice.

6. NOTES

(This section contains information of a general or explanatory nature which may be helpful, but is not mandatory.)

6.1 Intended use. This standard is intended for use by all manufacturers of connectors and components utilizing connector interfaces. The interfaces detailed within this document have been coordinated and accepted by all military services and are deemed United States standards for radio frequency connector interfaces.

6.2 Patent notice. The Government has a royalty-free license under the following listed patents for the benefit of manufacturers of the item either for the Government or for use in equipment to be delivered to the Government. U.S. patent number 4,426,127 applies to series BMA interfaces. U.S. patent number 4,358,174 applies to series BMB interfaces.

U.S. patent number 4,426,127

U.S. patent number 4,358,174

6.3 Subject term (key word) listing.

Connector interfaces
Connector, radio frequency
Interfaces, radio frequency connector

6.4 Changes from previous issue. Asterisks are not used in this revision to identify changes with respect to the previous issue due to the extensiveness of the changes.

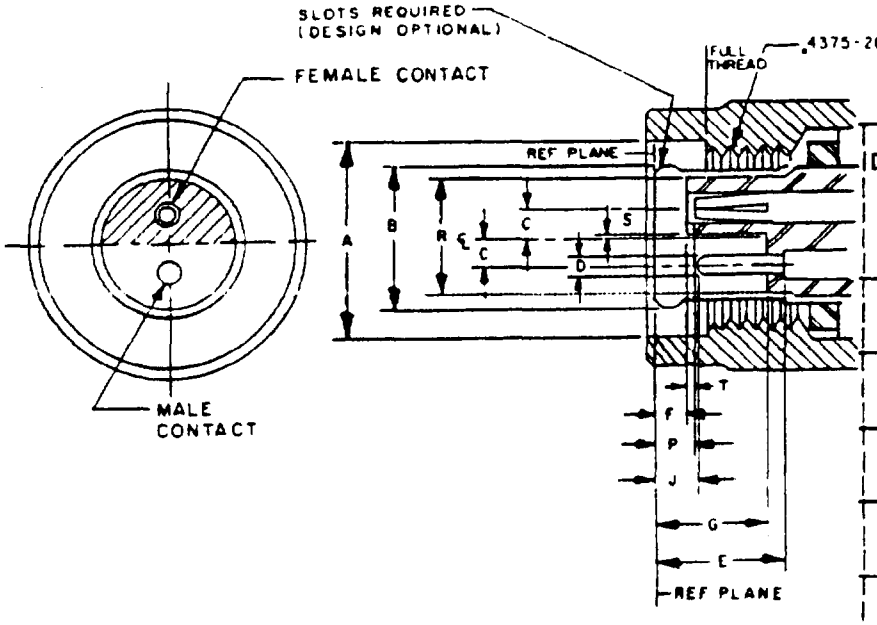

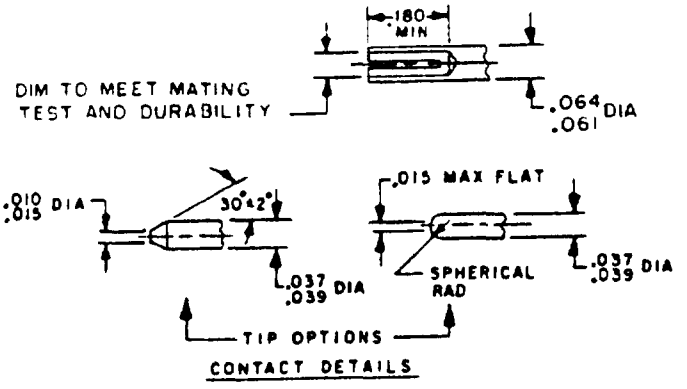

CONTACT DETAILS

Inches	mm
.010	0.25
.015	0.38
.037	0.94
.039	0.99
.061	1.55
.064	1.63
.180	4.57
.4375	11.112

Dimension	Inches		Millimeters	
	Min	Max	Min	Max
A	.440	--	11.18	--
B	Mating test			
C	.062	.064	1.57	1.63
D	.037	.039	0.94	0.99
E	.228	.260	5.79	6.60
F	.028	.042	0.71	1.07
G	.206	.228	5.23	5.79
J	.035	.065	0.89	1.65
P	.032	.062	0.81	1.57
R	.264	--	6.71	--
S	.001	.004	0.03	0.10
T	.000	--	.000	

NOTES:
1. Three holes equally spaced, .027 (0.69 mm) minimum diameter for safety wiring. Location on coupling nut optional.
2. This interface shall meet the gauge requirements as specified in MIL-C-3655/14.

FIGURE 101-1. Interface, series TWTNC, coupling nut.

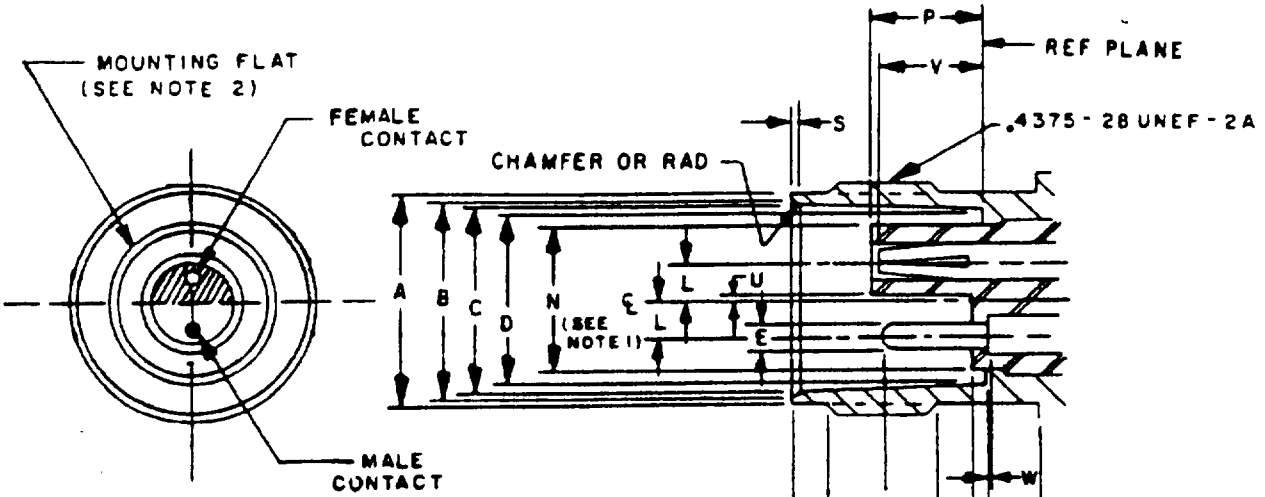

Dim Ltr	Inches		Millimeters	
	Min	Max	Min	Max
A	.378	.381	9.60	9.68
B	.345	.356	8.76	9.04
C	.327	.336	8.31	8.53
D	.319	.321	8.10	8.15
E	.037	.039	0.94	0.99
F	.068	.088	1.73	2.24
G	.329	.333	8.36	8.46
H	.187	-	4.75	-
J	.171	.200	4.34	5.08
L	.062	.064	1.57	1.63
N	-	.262	-	6.65
P	.188	.206	4.78	5.23
R	.415	-	10.54	-
S	.015	.030	0.38	0.76
T	.0	.028	0.0	0.71
U	.001	.004	0.03	0.10
V	.170	.200	4.32	5.08
W	.0	.040	0.0	1.02

Inches	mm
.010	0.25
.015	0.38
.037	0.94
.039	0.99
.061	1.55
.064	1.63
.180	4.57
.4375	11.112

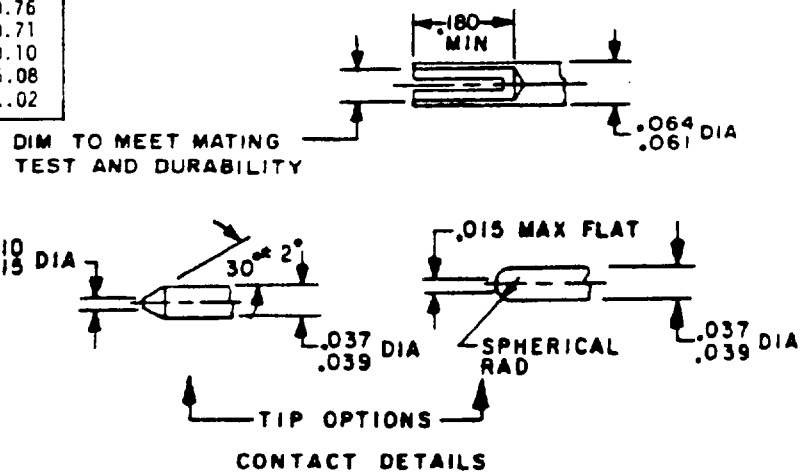

CONTACT DETAILS

NOTES:
1. N dimension applies to portion of dielectric protruding beyond reference plane.
2. Contacts, insulator, and mounting flat shall be oriented within ±3° of orientation shown.
3. This interface shall meet the guage requirements as specified in MIL-C-3655/13.
4. Clearance for mating connector coupling nut.

FIGURE 101-2. Interface, series TWTNC, no coupling nut.

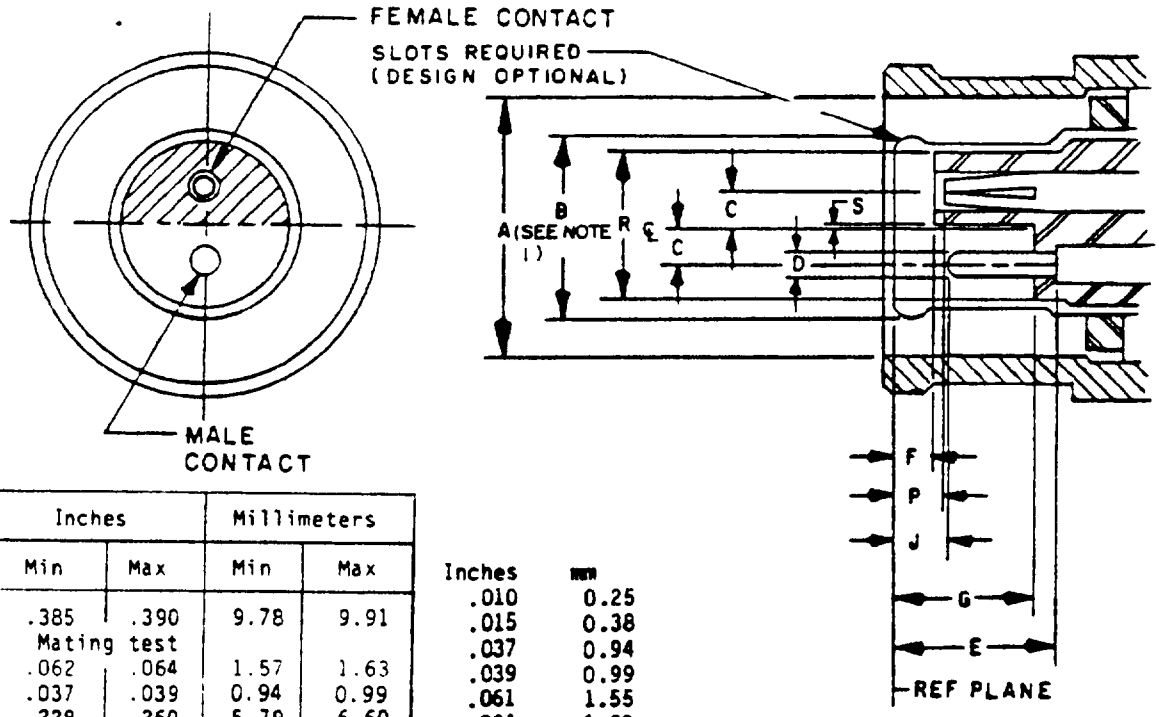

Dim Ltr	Inches Min	Inches Max	Millimeters Min	Millimeters Max
A	.385	.390	9.78	9.91
B	Mating test			
C	.062	.064	1.57	1.63
D	.037	.039	0.94	0.99
E	.228	.260	5.79	6.60
F	.028	.042	0.71	1.07
G	.206	.228	5.23	5.79
J	.035	.065	0.89	1.65
P	.032	.062	0.81	1.57
R	.264	-	6.71	-
S	.001	.004	0.03	0.10

Inches	mm
.010	0.25
.015	0.38
.037	0.94
.039	0.99
.061	1.55
.064	1.63
.180	4.57

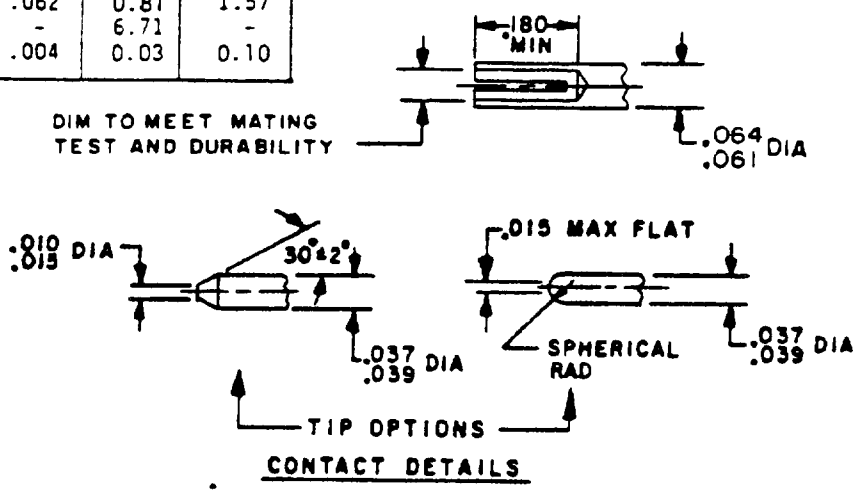

NOTES:
1. Flare to meet gauge test.
2. This interface shall meet the gauge requirements as specified in MIL-C-3655/15.

FIGURE 102-1. Interface, series TWBNC, with coupling nut.

Supersedes page 102.1 of MIL-STD-348A

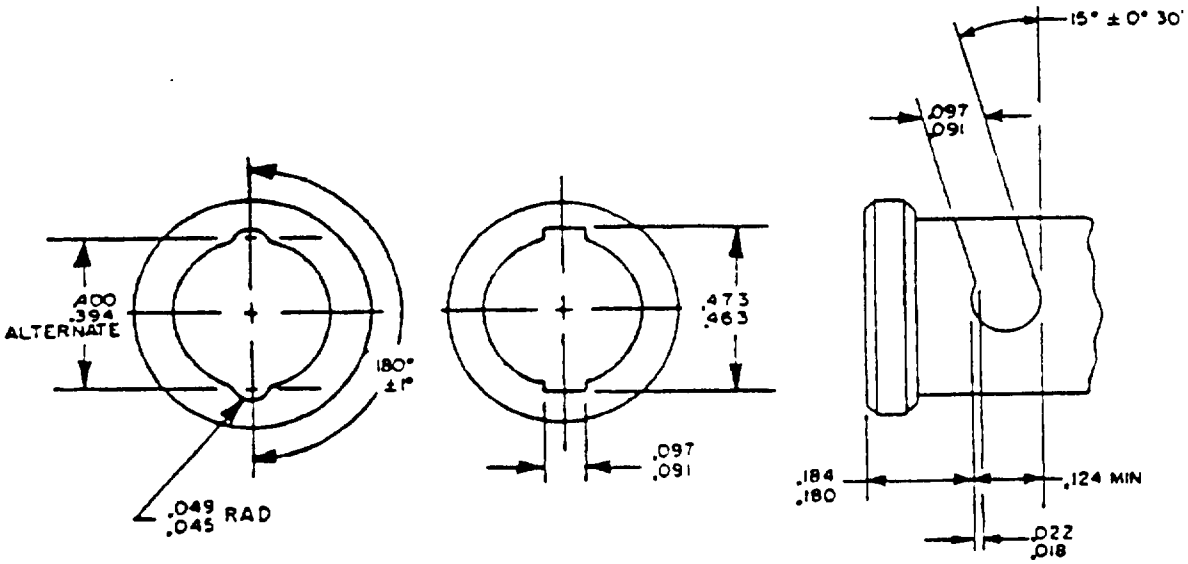

Inches	mm		Inches	mm
.018	0.46	||	.180	4.57
.022	0.56	||	.184	4.67
.045	1.14	||	.394	10.01
.049	1.24	||	.400	10.16
.091	2.31	||	.463	11.76
.097	2.46	||	.473	12.01
.124	3.15			

FIGURE 102-2. Interface, series TWBNC, coupling nut.

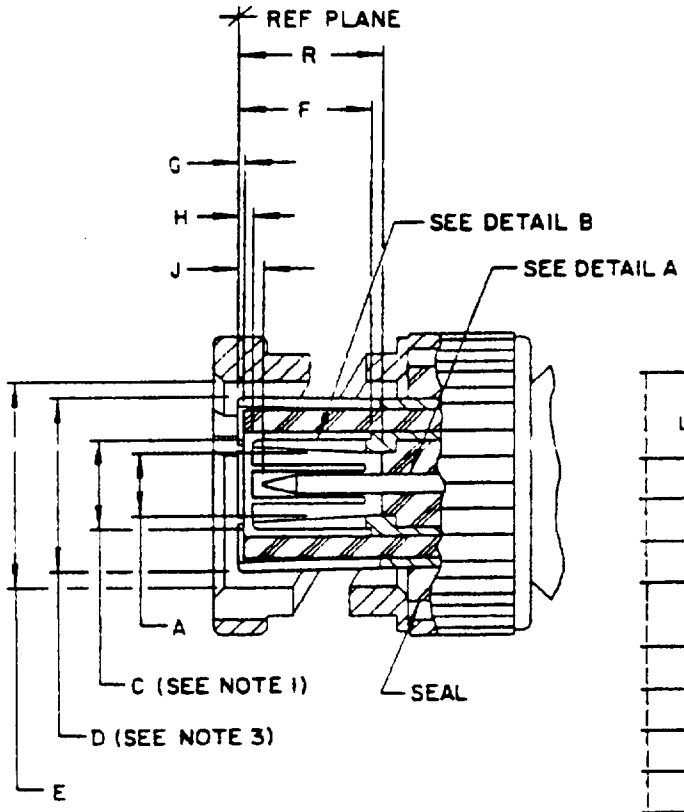

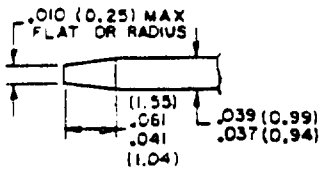

CENTER CONTACT
DETAIL A

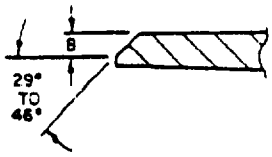

INTERMEDIATE CONDUCTOR
DETAIL B

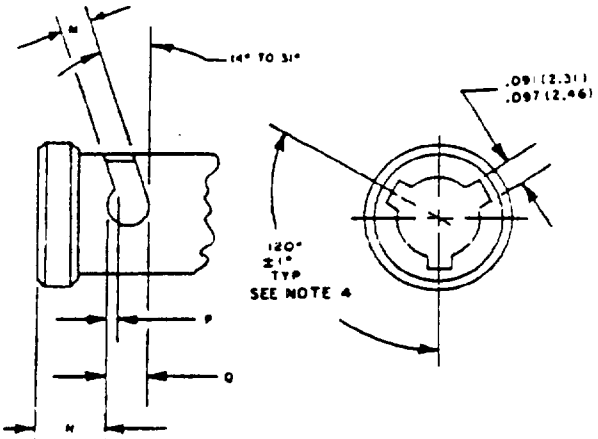

Ltr	Inches		Millimeters	
	Min	Max	Min	Max
A	.123	---	3.12	---
B	.005	.010	0.13	0.25
C	See note 1			
D				
E	.385	.390	9.78	9.91
F	.213	.242	5.41	6.15
G	.001	---	0.03	---
H	.007	.033	0.18	0.84
J	.008	.042	0.20	1.07
M	.091	.097	2.31	2.46
N	.180	.184	4.57	4.67
P	.018	.022	0.46	0.56
Q	.124	---	3.15	---
R	.213	---	5.41	---

NOTES:
1. Flared to meet mating characteristic test.
2. Metric equivalents are in parentheses or tabulated.
3. This interface shall meet the gauge requirements of MIL-C-49142.
4. Standard polarization, see MIL-C-49142 for other options.

FIGURE 201-1. Interface, series, TRB, pin contact.

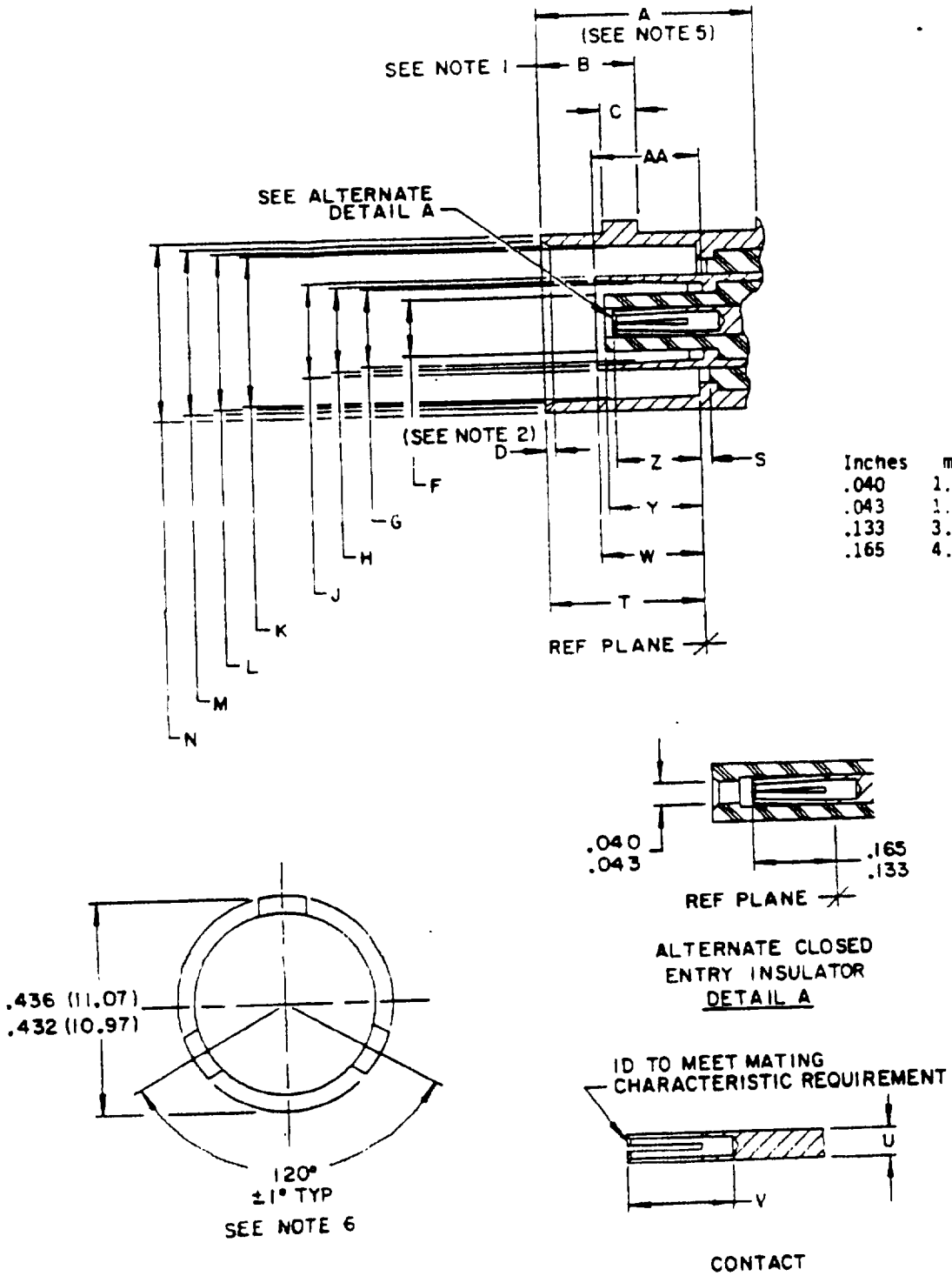

Inches	mm
.040	1.00
.043	1.10
.133	3.38
.165	4.20

FIGURE 201-2. Interface, series TRB, socket contact.

Ltr	Inches		Millimeters	
	Min	Max	Min	Max
A	.414	---	10.52	---
AA	.206	.213	5.23	5.41
B	.204	.208	5.18	5.28
C	.075	.081	1.90	2.06
D	.015	.030	0.38	0.76
F	.117	.122	2.97	3.10
G	.169	.171	4.29	4.34
H	.178	.182	4.52	4.62
J	.195	.199	4.95	5.05
K	.319	.321	8.10	8.15
L	.327	.333	8.31	8.46
M	.346	.356	8.79	9.04
N	.378	.382	9.60	9.70
S	.001	---	0.03	---
T	.327	.335	8.31	8.51
U	.062	.064	1.57	1.63
V	.200	---	5.08	---
W	.187	.213	4.75	5.41
Y	---	.213	---	5.41
Z	.165	.203	4.19	5.16

NOTES:
1. .005 (0.13 mm) flat permissible to meet dimension B.
2. Chamfer or radius.
3. Metric equivalents are in parentheses or tabulated.
4. This interface shall meet the gauge requirements of MIL-C-49142.
5. Clearance for mating connector coupling nut.
6. Standard polarization, see MIL-C-49142 for other options.

FIGURE 201-2. Interface, series TRB, socket contact - Continued.

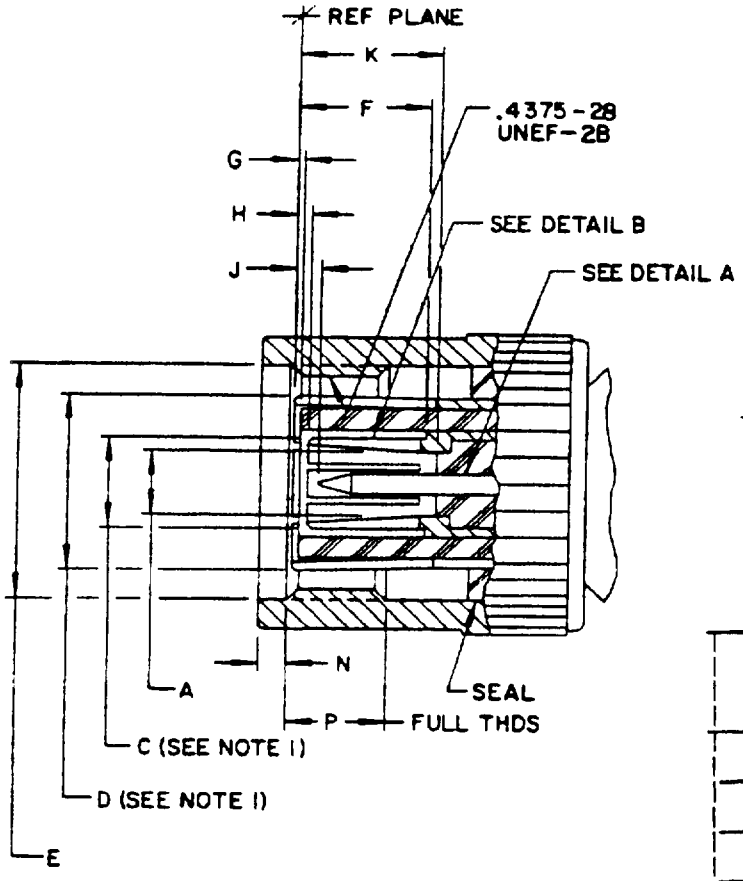

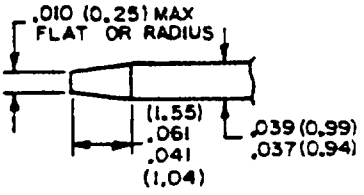

CENTER CONDUCTOR
DETAIL A

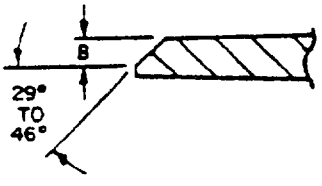

INTERMEDIATE CONDUCTOR
DETAIL B

Ltr	Inches		Millimeters	
	Min	Max	Min	Max
A	.123	---	3.12	---
B	.005	.010	0.13	0.25
C	See note 1			
D				
E	.440	---	11.18	---
F	.213	.242	5.41	6.15
G	.001	---	0.03	---
H	.007	.033	0.18	0.84
J	.008	.042	0.20	1.07
K	.213	---	5.41	---
N	.063	---	1.60	---
P	.156	---	3.96	---

NOTES:
1. Flared to meet mating characteristic test.
2. Metric equivalents are in parentheses or tabulated.
3. This interface shall meet the gauge requirements of MIL-C-49142.

FIGURE 202-1. Interface, series TRT, pin contact.

Supersedes page 202.1 of MIL-STD-348A

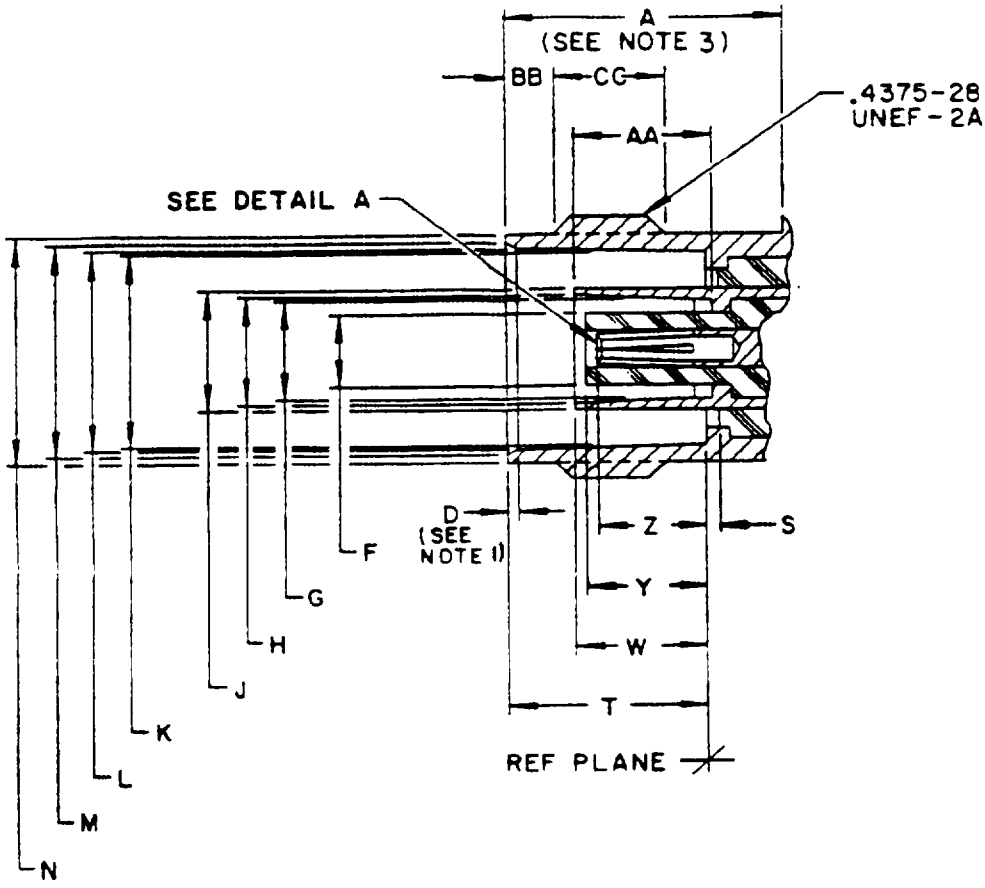

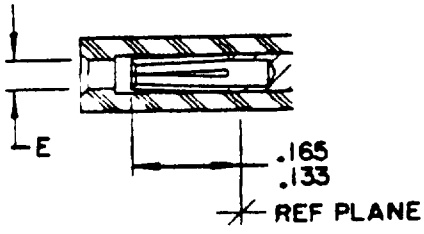

ALTERNATE CLOSED
ENTRY INSULATOR
DETAIL A

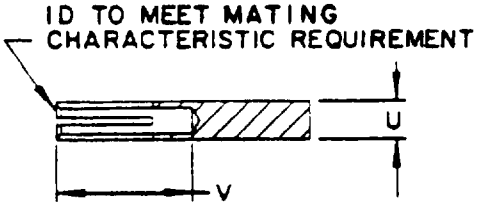

CONTACT

FIGURE 202-2. Interface, series TRT, socket contact.

Ltr	Inches		Millimeters	
	Min	Max	Min	Max
A	.414	---	10.52	---
D	.015	.030	0.38	0.76
E	.040	.043	1.02	1.09
F	.117	.122	2.97	3.10
G	.169	.171	4.29	4.34
H	.178	.182	4.52	4.62
J	.195	.199	4.95	5.05
K	.319	.321	8.10	8.15
L	.327	.333	8.31	8.46
M	.346	.356	8.79	9.04
N	.378	.382	9.60	9.70

Ltr	Inches		Millimeters	
	Min	Max	Min	Max
S	.001	---	0.03	---
T	.327	.335	8.31	8.51
U	.062	.064	1.57	1.63
V	.200	---	5.08	---
W	.187	.213	4.75	5.41
Y	---	.213	---	5.41
Z	.165	.203	4.19	5.15
AA	.206	.213	5.23	5.41
BB	.068	.088	1.73	2.24
CC	.187	---	4.75	--

NOTES:
1. Chamfer or radius.
2. This interface shall meet the gauge requirements of MIL-C-49142.
3. Clearance for mating connector coupling nut.

FIGURE 202-2. Interface, series TRT, socket contact - Continued.

SECTION 300

Interface Dimensions for MIL-C-3643, MIL-C-3650, MIL-C-26637, MIL-C-39012, MIL-A-55339, and MIL-C-83517

Section 301	Series BNC
Section 302	Series C
Section 303	Series MHV
Section 304	Series N
Section 305	Series QL
Section 306	Series QM
Section 307	Series QNC
Section 308	Series QSC
Section 309	Series SC
Section 310	Series SMA
Section 311	Series SMB
Section 312	Series SMC
Section 313	Series TNC
Section 314	Series SHV
Section 315	Series LC
Section 316	Environment resistant
Section 317	Series HN
Section 318	Series LT
Section 319	Series SSMA
Section 320	Series SSMB
Section 321	Series BMA
Section 322	Series BMB

Supersedes section 300 of MIL-STD-348A

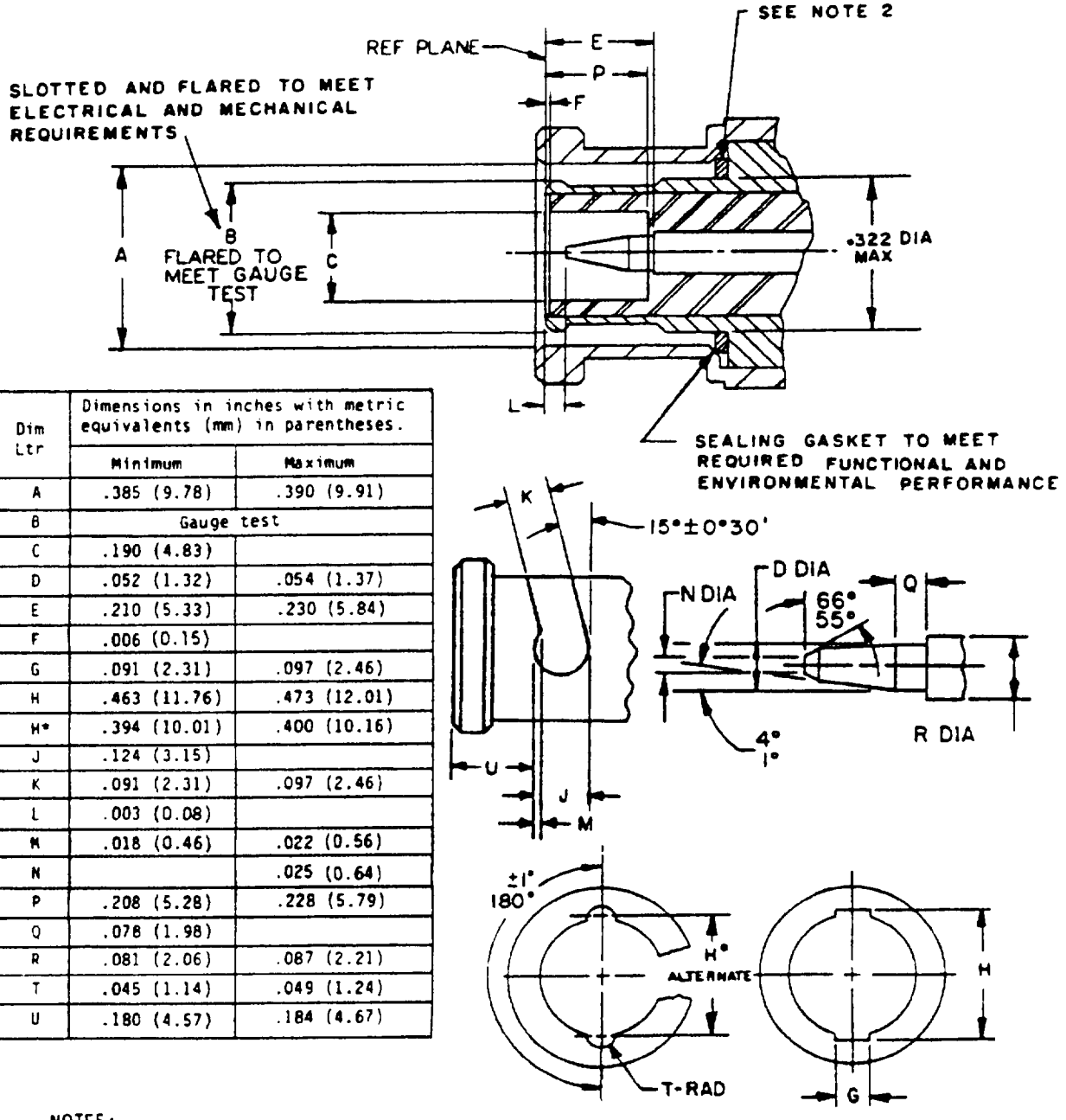

Dim Ltr	Dimensions in inches with metric equivalents (mm) in parentheses.	
	Minimum	Maximum
A	.385 (9.78)	.390 (9.91)
B	Gauge test	
C	.190 (4.83)	
D	.052 (1.32)	.054 (1.37)
E	.210 (5.33)	.230 (5.84)
F	.006 (0.15)	
G	.091 (2.31)	.097 (2.46)
H	.463 (11.76)	.473 (12.01)
H*	.394 (10.01)	.400 (10.16)
J	.124 (3.15)	
K	.091 (2.31)	.097 (2.46)
L	.003 (0.08)	
M	.018 (0.46)	.022 (0.56)
N		.025 (0.64)
P	.208 (5.28)	.228 (5.79)
Q	.078 (1.98)	
R	.081 (2.06)	.087 (2.21)
T	.045 (1.14)	.049 (1.24)
U	.180 (4.57)	.184 (4.67)

NOTES:
1. In the mated condition, the longitudinal force of the spring of the coupling mechanism shall exceed the pressure exerted by the sealing gasket by an amount necessary to insure butting of the outer contacts at the reference plane.
2. This interface shall meet the gauge requirements as specified in MIL-C-39012/16.

FIGURE 301-1. Interface, series BNC, pin contact.

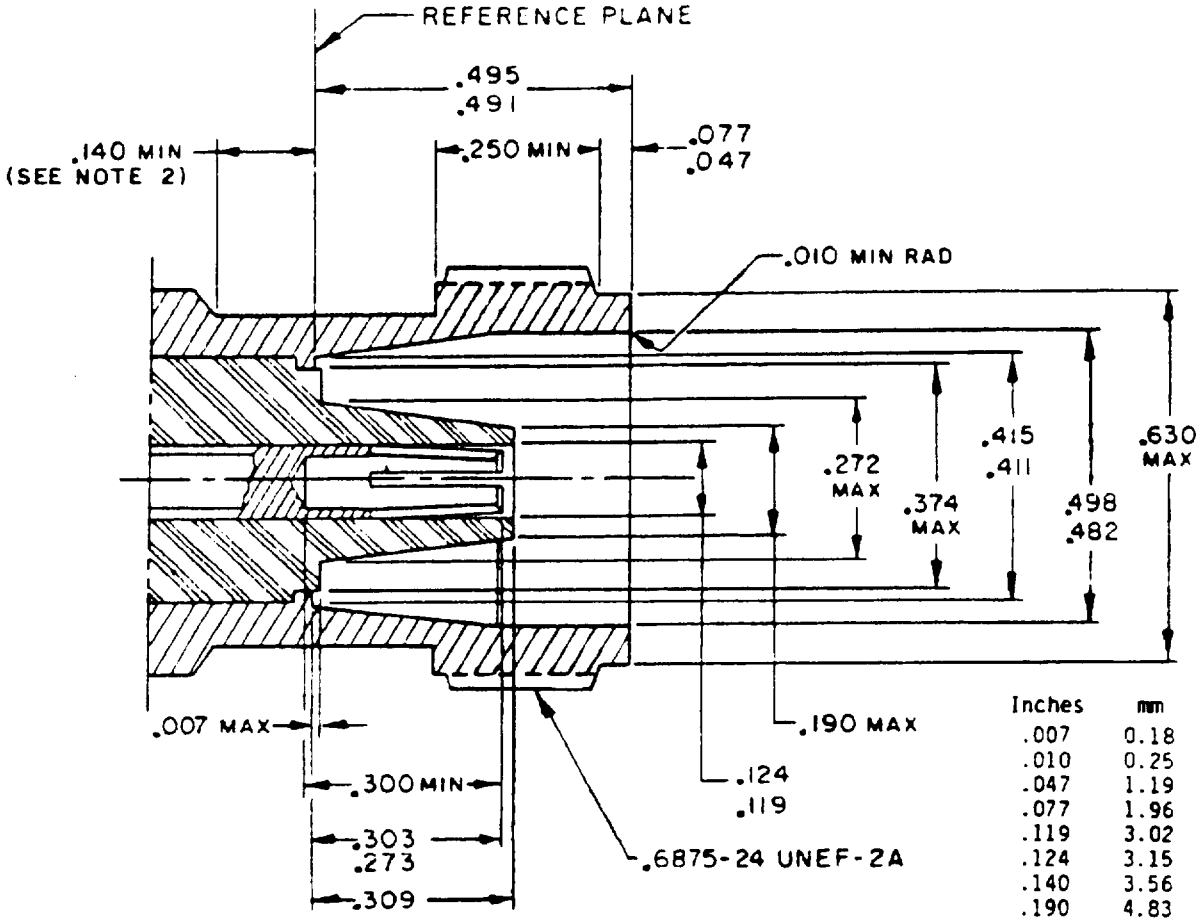

Inches	mm
.007	0.18
.010	0.25
.047	1.19
.077	1.96
.119	3.02
.124	3.15
.140	3.56
.190	4.83
.250	6.35
.272	6.91
.273	6.93
.300	7.62
.303	7.70
.309	7.85
.374	9.50
.411	10.44
.415	10.54
.482	12.24
.491	12.47
.495	12.57
.498	12.65
.630	16.00
.6875	17.460

NOTES:
1. This interface shall meet the gauge requirements as specified in MIL-C-39012/40.
2. Clearance for mating connector coupling nut.

FIGURE 309-2. Interface, series SC, socket contact.

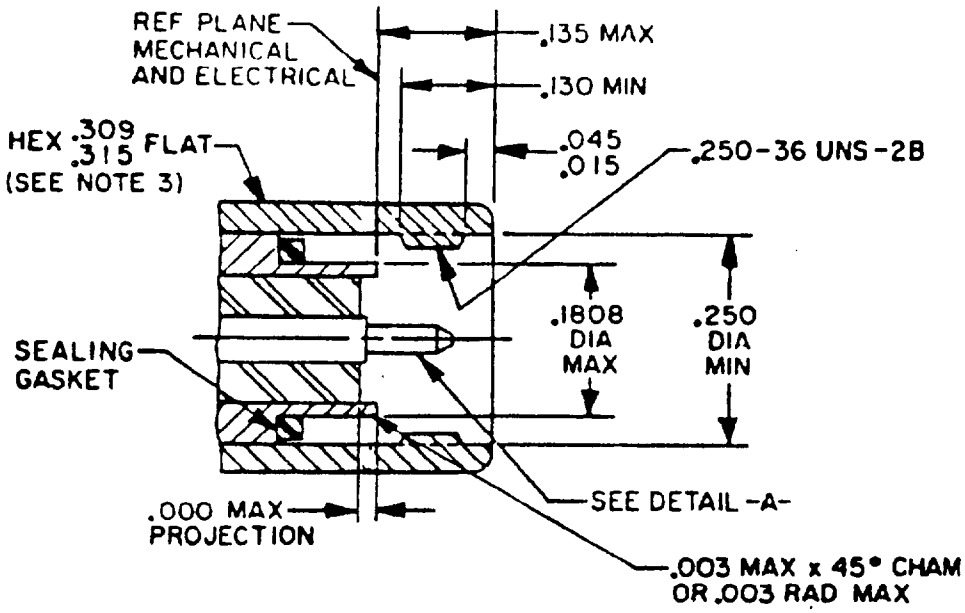

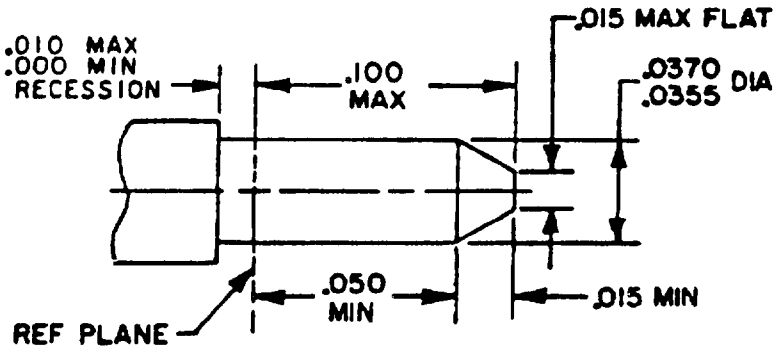

DETAIL-A-

Inches	mm
.003	0.08
.010	0.25
.015	0.38
.0355	0.900
.0370	0.940
.045	1.14
.050	1.27
.100	2.54
.130	3.30
.135	3.43
.1808	4.590
.250	6.35
.309	7.85
.315	8.00

NOTES:
1. This interface shall meet the guage requirements as specified in MIL-C-39012/79.
2. Connector interfaces (after connector mating) shall be kept free from dust and moisture.
3. May extend throughout the full length of the coupling nut.

FIGURE 310-1. Interface, series SMA, pin contact.

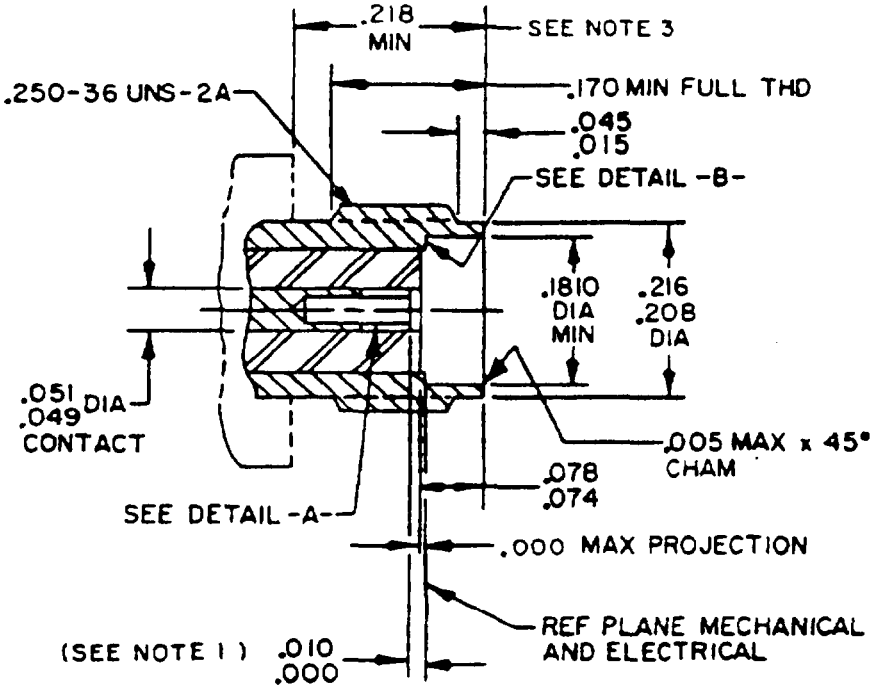

Inches	mm
.005	0.13
.010	0.25
.015	0.38
.0355	0.90
.0370	0.94
.045	1.14
.049	1.24
.051	1.29
.074	1.88
.078	1.98
.115	2.92
.168	4.27
.170	4.32
.1810	4.597
.208	5.28
.216	5.49
.218	5.54
.250	6.35

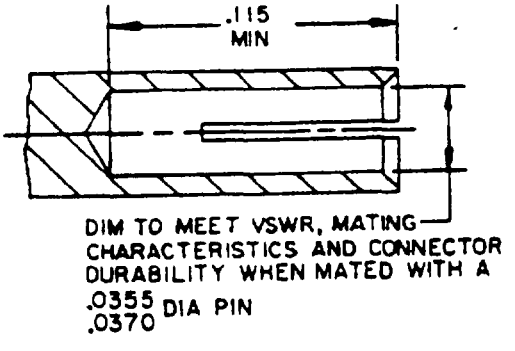

DETAIL -A-

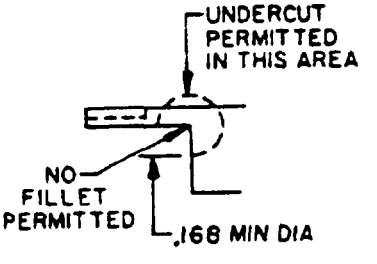

DETAIL -B-

NOTES:

1. Previously qualified parts utilizing a .030 inch maximum contact recession shall be acceptable for Government procurement up to 18 months from the date of this specification for existing designs only. Caution should be exercised to determine whether a thick wall (.030 inch recession) design is being used during maintenance and part replacement.
2. This interface shall meet the guage requirements as specified in MIL-C-39012/83.
3. Clearance for mating connector coupling nut.

FIGURE 310-2. Interface, series SMA, socket contact.

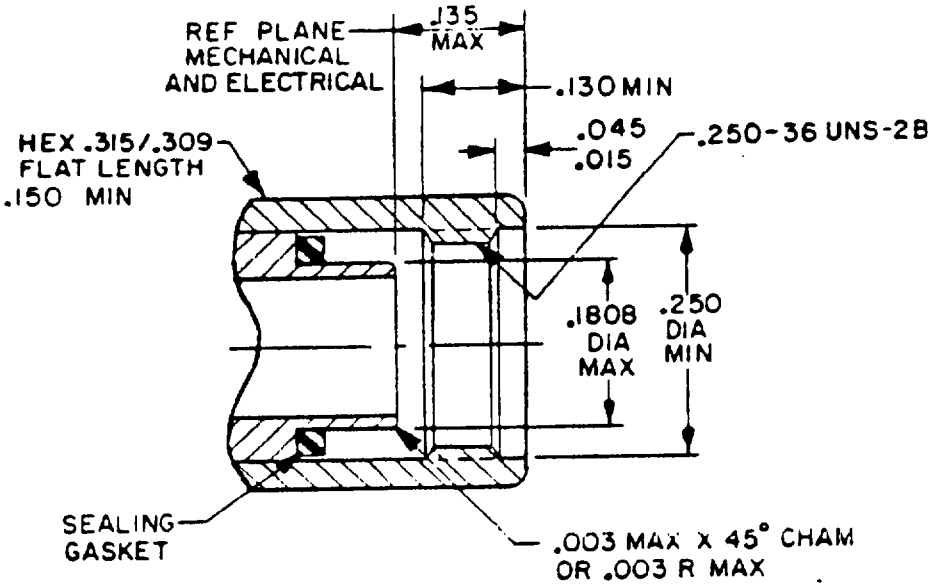

Inches	mm
.003	0.08
.015	0.38
.045	1.14
.130	3.30
.135	3.43
.150	3.81
.1808	4.59
.250	6.35
.309	7.85
.315	8.00

NOTES:
1. This interface shall meet the gauge requirements as specified in MIL-C-39012/92.
2. Reference MIL-C-39012/92 for cable stripping dimensions.

FIGURE 310-3. Interface, series SMA, no contact

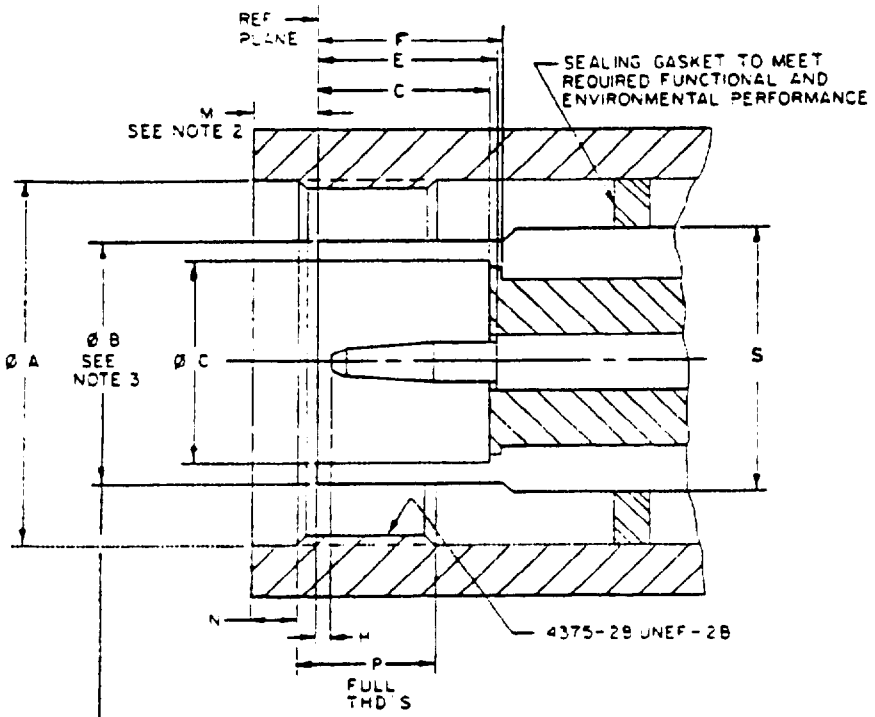

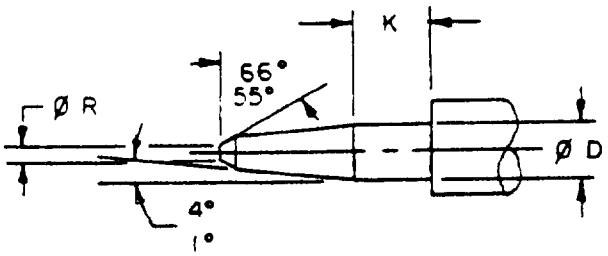

Ltr	Inches		Millimeters	
	Min	Max	Min	Max
A	.440		11.18	---
B	.314	.318	7.98	8.08
C	.238	.242	6.05	6.15
D	.052	.054	1.32	1.37
E	.208	---	5.28	
F	.212	---	5.38	
G	.208	---	5.28	
H	.003	.040	0.08	1.02
K	.078	---	1.98	
M		.078		1.98
N	.063		1.60	
P	.156		3.96	
R		.025		0.64
S		.322		8.18

NOTES:
1. Three holes .027 inch minimum diameter equally spaced for safety wiring when required. Location on coupling nut is optional.
2. Dimension with nut bias fully forward.
3. For unslotted version. Slotted designs must meet gauge test, B dimension will not apply.

FIGURE 313-3. Interface, series TNCA, pin contact, air interface.

NEW PAGE

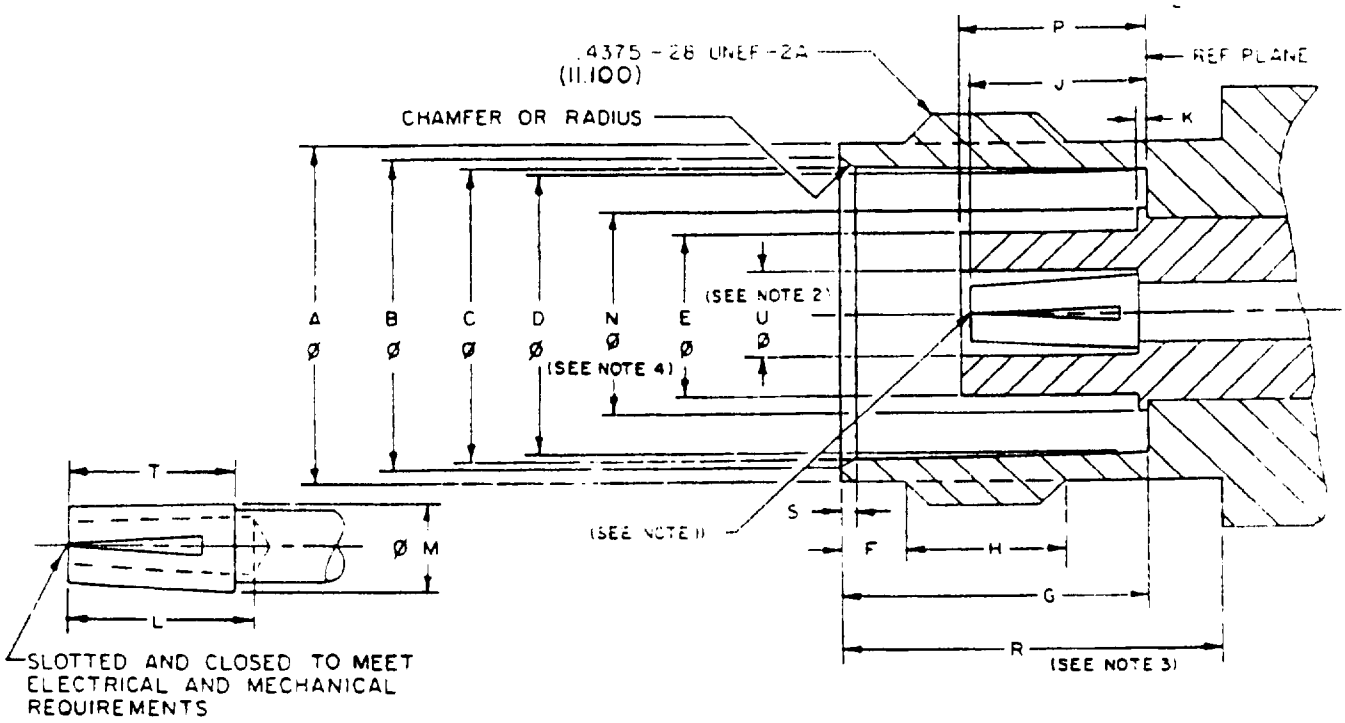

Ltr	Inches		Millimeters	
	Min	Max	Min	Max
A	.378	.381	9.60	9.68
B	.346	.356	8.79	9.04
C	.327	.333	8.31	8.46
D	.319	.321	8.10	8.15
E	.182	.186	4.62	4.72
F	.068	.088	1.73	2.24
G	.327	.335	8.31	8.51
H	.187	---	4.75	--
J	.198	.208	.208	5.28

Ltr	Inches		Millimeters	
	Min	Max	Min	Max
K	---	.006	---	0.15
L	.195	---	4.95	--
M	.084	.087	2.13	2.21
N	---	.230		5.84
P	.198	.208	5.03	5.28
R	.414		10.52	--
S	.015	.030	.030	0.76
T	.180	.196	.196	4.98
U	---	.092	---	2.34

NOTES:
1. I.D. to meet VSWR when mated with .052 (1.32 mm) -.054 (1.37 mm) diameter pin.
2. Diameter is I.D. of dielectric.
3. Clearance for mating connector coupling nut.
4. Applies to portion of dielectric which protrudes beyond metal shoulder (reference plane).

FIGURE 313-4. Interface, series TNCA, socket contact, air interface.

NEW PAGE

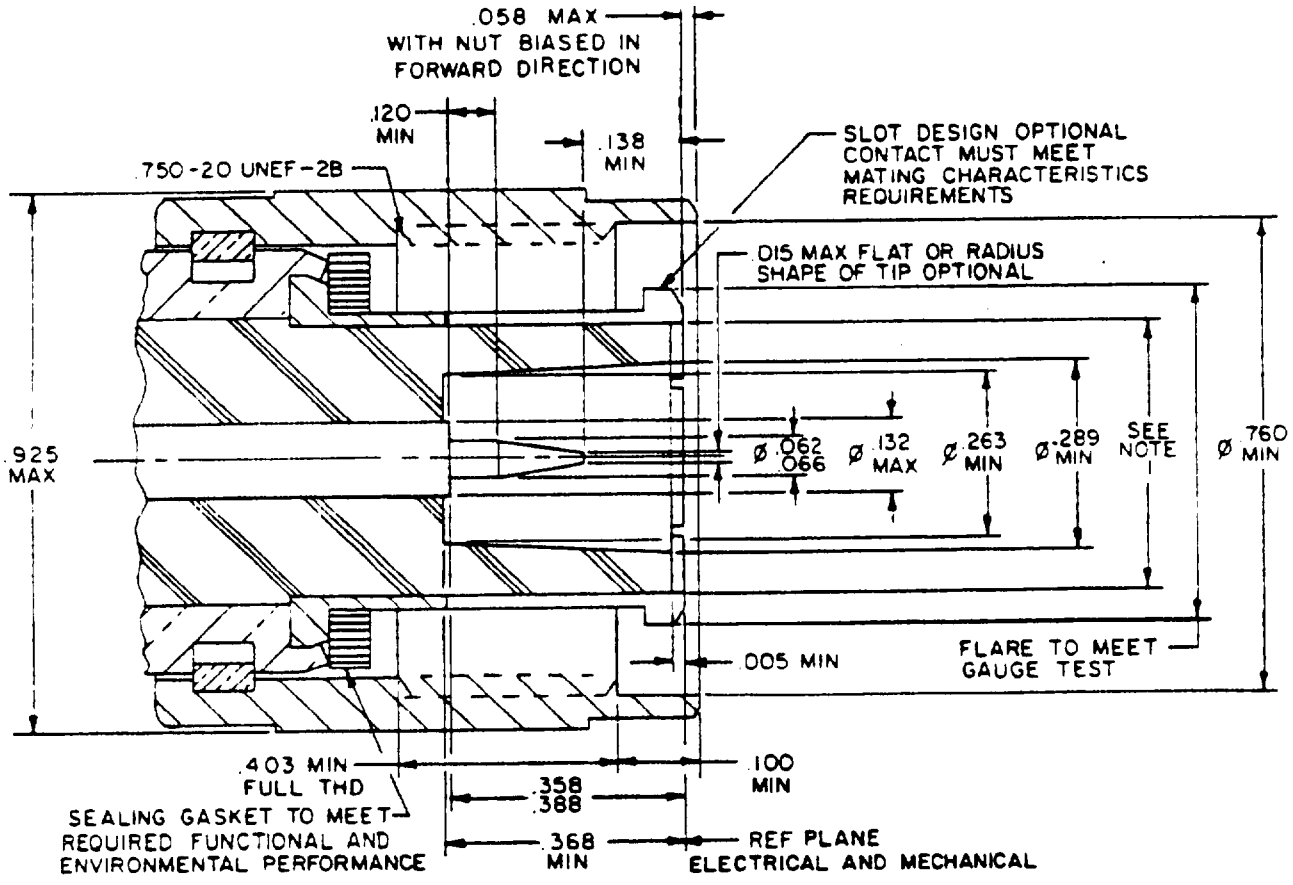

Inches	mm	Inches	mm
.005	0.13	.289	7.33
.015	0.38	.358	9.10
.058	1.48	.368	9.33
.062	1.58	.388	9.85
.066	1.68	.403	10.22
.100	2.54	.432	10.98
.120	3.03	.548	13.90
.132	3.35	.750	19.05
.138	3.50	.760	19.30
.263	6.69	.925	23.50

NOTE: I.D. of outer contact when inserted into a .548 maximum diameter ring gauge shall be .432 minimum.

FIGURE 317-1. Interface, series HN, pin contact.

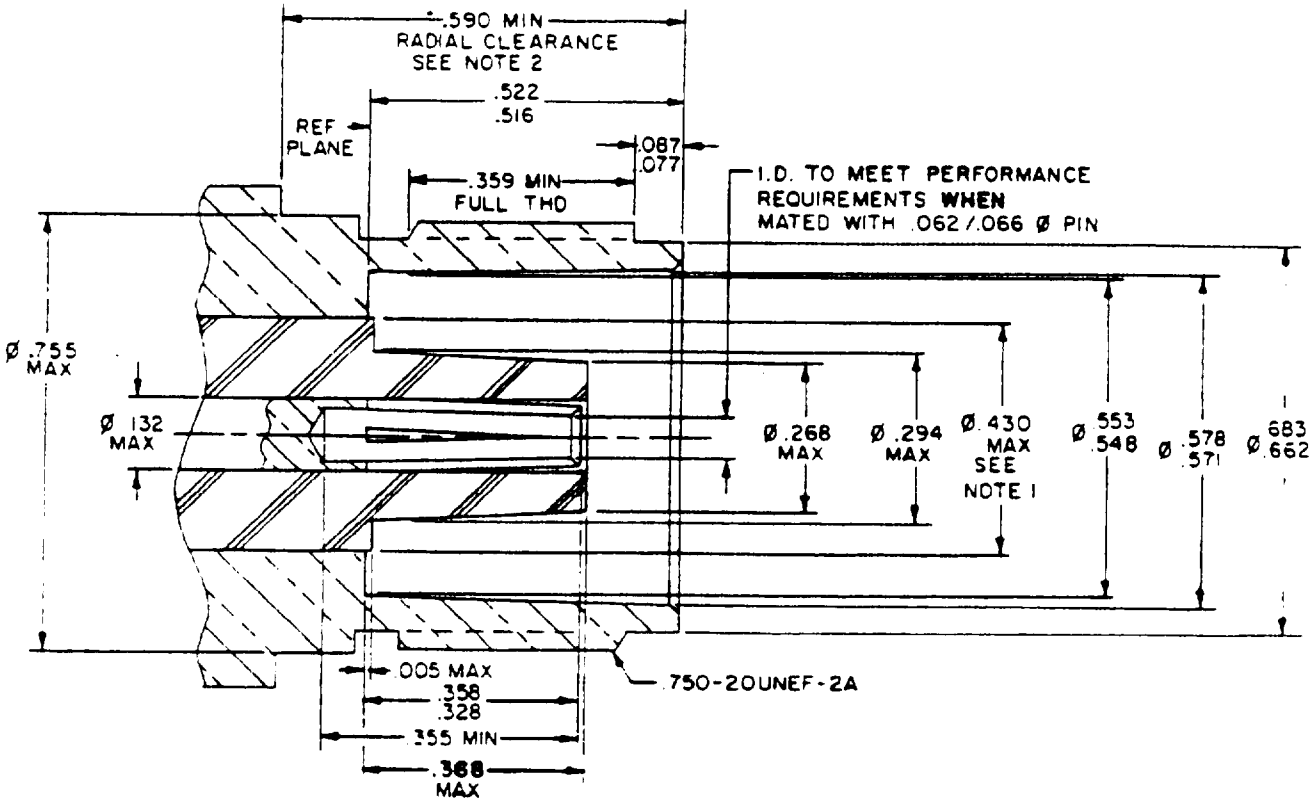

Inches	mm	Inches	mm
.005	0.13	.430	10.91
.062	1.58	.516	13.10
.066	1.68	.522	13.25
.077	1.95	.548	13.90
.087	2.20	.553	14.05
.132	3.35	.571	14.50
.268	6.80	.590	14.99
.328	8.32	.662	16.80
.355	9.00	.683	17.35
.358	9.10	.750	19.05
.359	9.11	.755	19.18
.368	9.35		

NOTES:
1. Dielectric protrusion beyond reference plane.
2. Clearance for mating connector coupling nut.

FIGURE 317-2. Interface, series HN, socket contact.

Supersedes page 317.2 of MIL-STD-348A

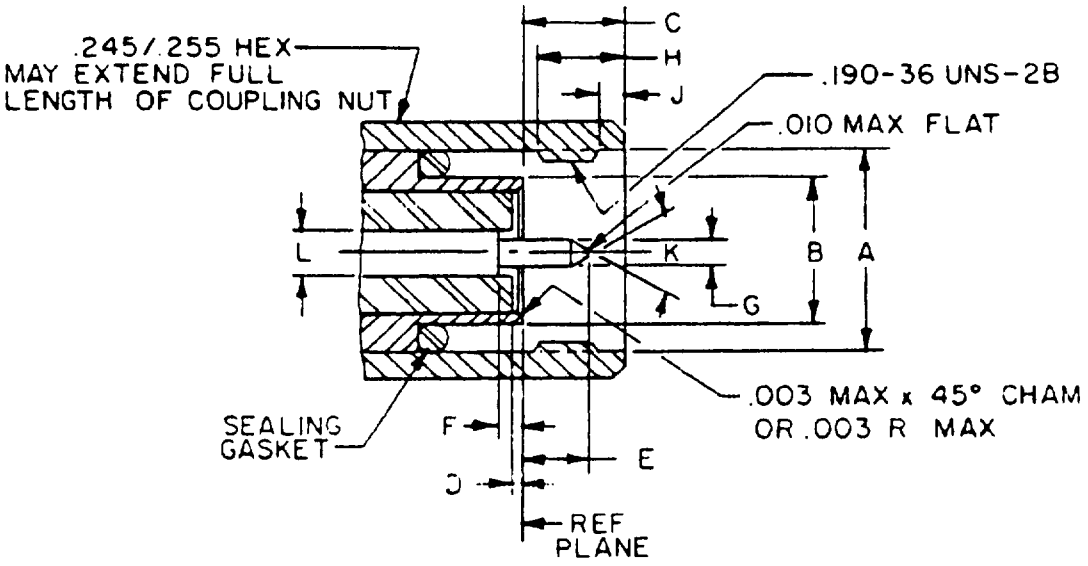

Inches	mm
.003	0.08
.045	1.14
.190	4.83
.245	6.21
.255	6.48

Ltr	Inches		Millimeters	
	Min	Max	Min	Max
A dia	.196	.202	4.98	5.13
B dia	.124	.1268	3.15	3.22
C	.100	1.33	2.54	3.38
D	.000	.010	0.00	0.25
E	.050	.065	1.27	1.65
F	.000	.010	0.00	0.25
G dia	.0195	.0208	0.495	0.529
H	.130	---	3.30	---
J	.015	0.45	0.38	1.14
K	70°	95°	70°	95°
L dia	.0335	.0348	0.851	0.884

FIGURE 319-1. Interface, series SSMA, pin contact.

Supersedes page 319.1 of MIL-STD-348A

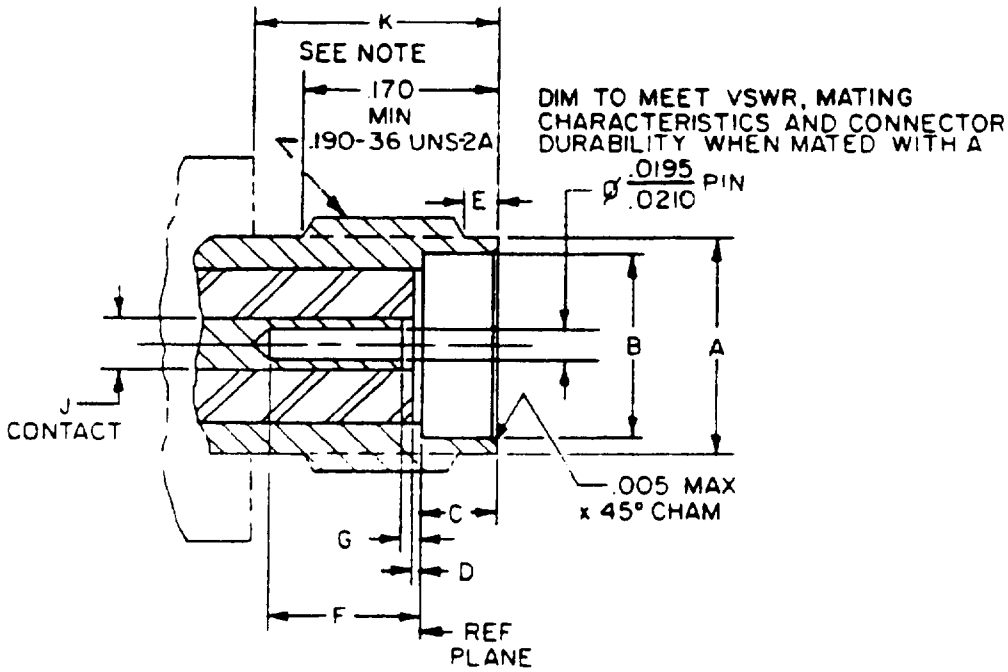

Inches	mm
.005	0.11
.0195	0.500
.0210	0.530
.170	4.30
.190	4.81

Ltr	Inches		Millimeters	
	Min	Max	Min	Max
A dia	.153	.160	3.89	4.06
B dia	.127	.130	3.23	3.30
C	.075	.077	1.90	1.96
D	.000	.010	0.00	0.25
E	.020	.040	0.51	1.02
F	.075	---	1.90	--
G	.000	.010	0.00	0.25
J dia	.0335	.0348	0.851	0.884
K	.230	---	5.84	---

NOTE: Clearance for coupling nut.

FIGURE 319-2. Interface, series SSMA, socket contact.

Supersedes page 319.2 of MIL-STD-348A

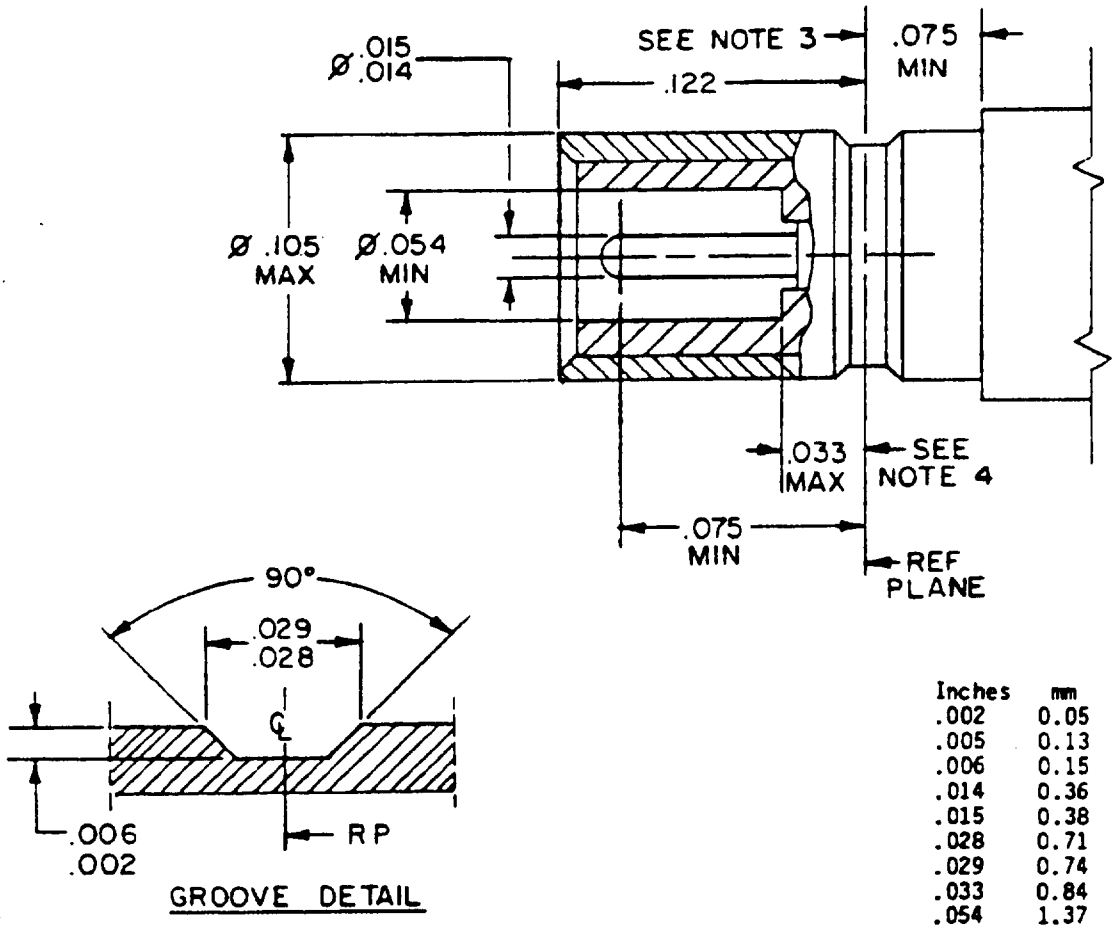

Inches	mm
.002	0.05
.005	0.13
.006	0.15
.014	0.36
.015	0.38
.028	0.71
.029	0.74
.033	0.84
.054	1.37
.075	1.91
.105	2.67
.122	3.10

NOTES:
1. All undimensioned pictorial representations are for reference purposes only.
2. Unless otherwise specified, tolerances shall be ±.005.
3. Clearance for mating connector coupling nut.
4. This dimension (.033 maximum) applies to both the insulator and the contact.

FIGURE 320-1. Interface, series SSMB, pin contact.

NEW PAGE

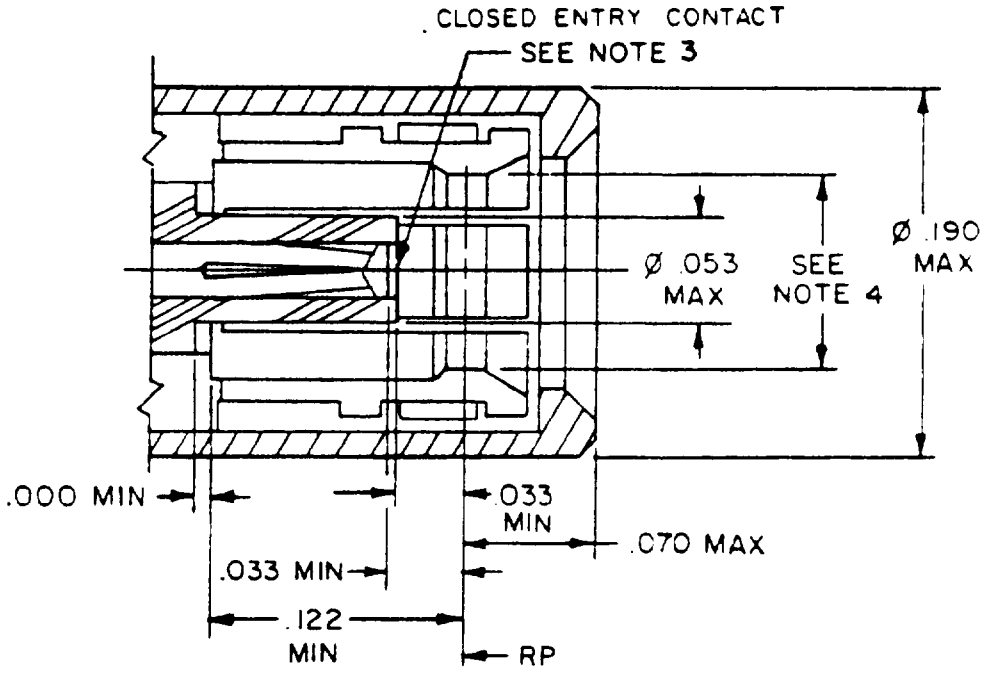

Inches	mm
.033	0.84
.053	1.34
.070	1.78
.122	3.10
.190	4.82

NOTES:
1. All undimensioned pictorial representations are for reference purposes only.
2. Unless otherwise specified, tolerances shall be ±.005.
3. Inside diameter of contact to meet VSWR, mating characteristics and connector durability when mated with a .014 -.015 inch diameter male contact.
4. Must meet the force to engage/disengage requirement when mated with its mating part.

FIGURE 320-2. Interface, series SSMB, socket contact.

NEW PAGE

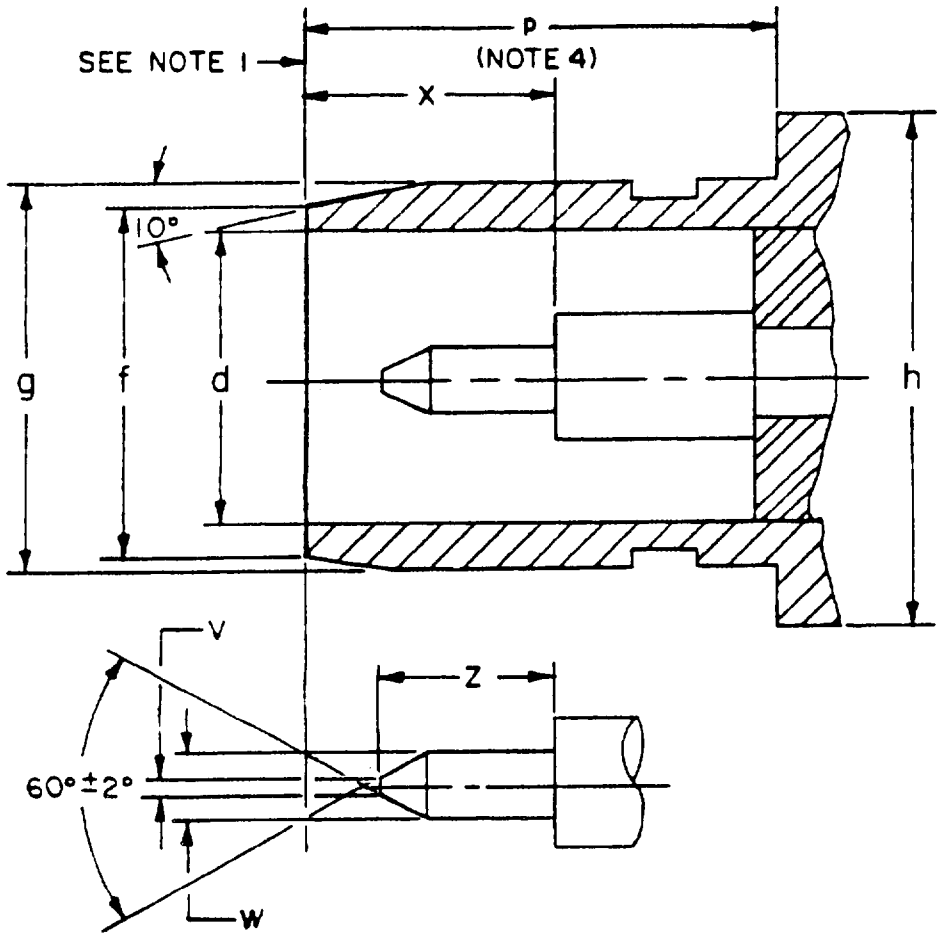

FIGURE 321-1. Interface, series BMA, pin contact.

NEW PAGE

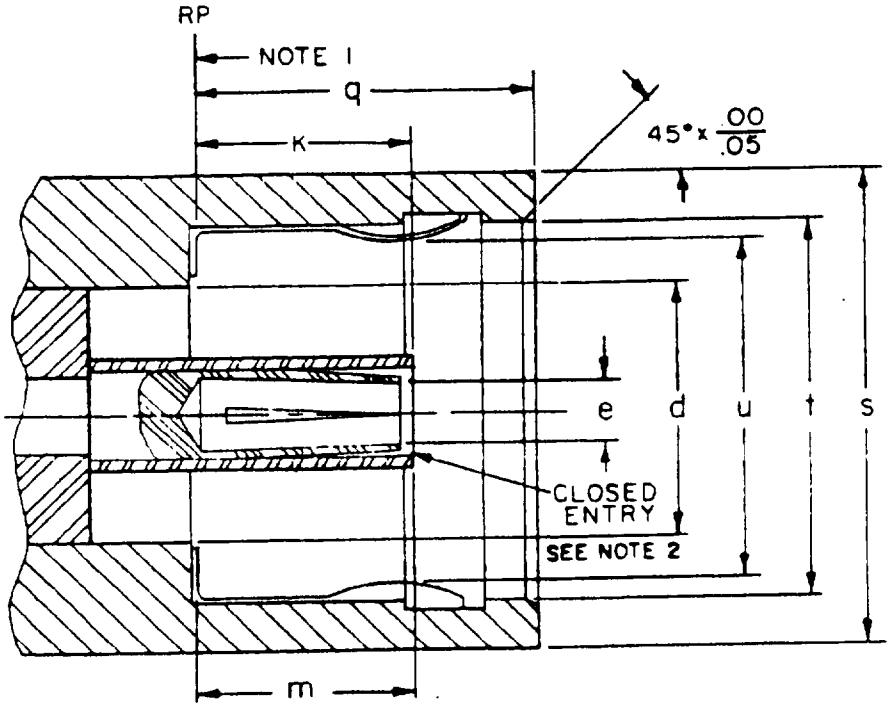

Inches	mm
.005	0.13
.010	0.25
.012	0.30
.0355	0.90
.0370	0.94
.115	2.92
.164	4.15
.184	4.68
.187	4.75
.222	5.64
.250	6.35
.278	7.05
.468	11.89

FIGURE 321-2. Interface, series BMA, socket contact.

NEW PAGE

Ref	Inches		Millimeters		Notes
	Min	Max	Min	Max	
d	0.161 nom		4.08 nom		
e	---	--	---	--	2
f	0.192 nom		4.88 nom		
g	.209	.211	5.30	5.35	
h	0.300 nom		7.62 nom		
k	---	0.127	---	3.22	
m	0.115	---	2.92	---	
p	0.198	---	5.03	---	
q	---	0.195	---	4.95	3
s	0.290	---	7.37	---	
t	.225	---	5.71	---	
u	---	0.200	---	5.08	
v	---	0.015	---	0.38	
w	0.0354	0.0370	0.899	0.940	
x	0.128	---	3.25	---	
z	0.090 nom		2.29 nom		

NOTES:
1. Reference plane.
2. Bore diameter closed to meet electrical and mechanical requirements when mated with a 0.0355/0.0370 inch (0.902/0.940 mm) pin.
3. With spring finger bottomed.
4. Clearance for mating connector coupling nut.
5. Patent notice: See 6.2 for U.S. patent number 4,426,127.

FIGURE 321-3. Interface dimension table, series BMA.

NEW PAGE

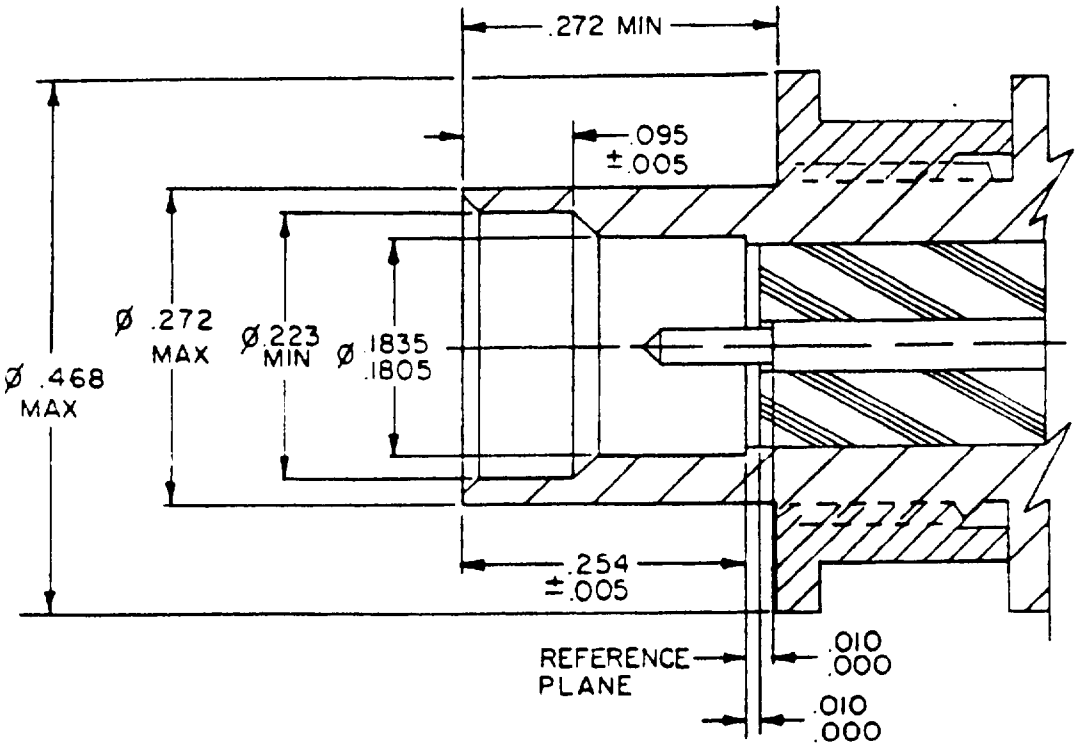

Inches	mm
.005	0.13
.010	0.25
.015	0.38
.0355	0.940
.0370	0.940
.050	1.27
.095	2.40
.100	2.54
.1805	4.580
.1835	4.660
.223	5.66
.254	6.45
.272	6.91
.468	11.89

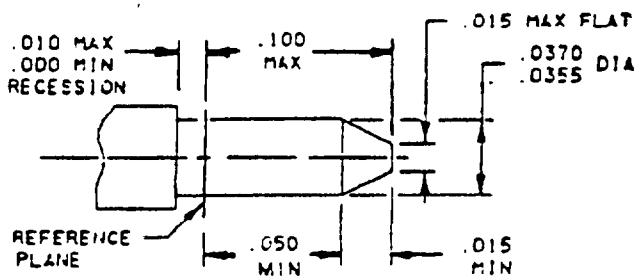

DETAIL -A-

NOTES:
1. Patent notice: See 6.2 for U.S. patent number 4,358,174.
2. Unless otherwise specified, tolerance is ±.005 (0.13 mm).

FIGURE 322-1. Interface, series BMB, pin contact.

NEW PAGE

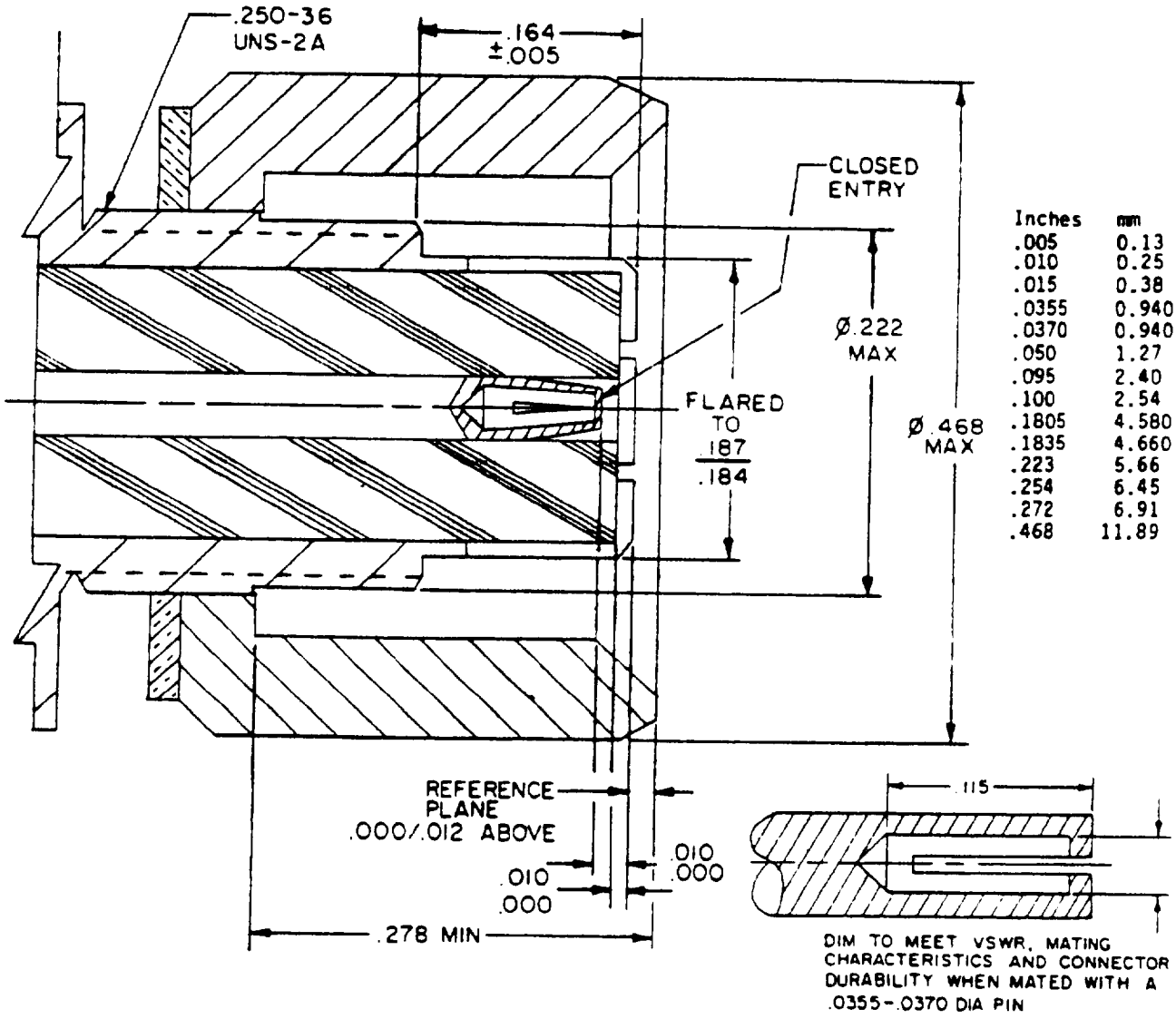

Inches	mm
.005	0.13
.010	0.25
.015	0.38
.0355	0.940
.0370	0.940
.050	1.27
.095	2.40
.100	2.54
.1805	4.580
.1835	4.660
.223	5.66
.254	6.45
.272	6.91
.468	11.89

NOTES:

1. Patent notice: See 6.2 for U.S. patent number 4,358,174.
2. Unless otherwise specified, tolerance is ±.005 (0.13 mm).

FIGURE 322-2. Interface, series BMB, socket contact.

NEW PAGE

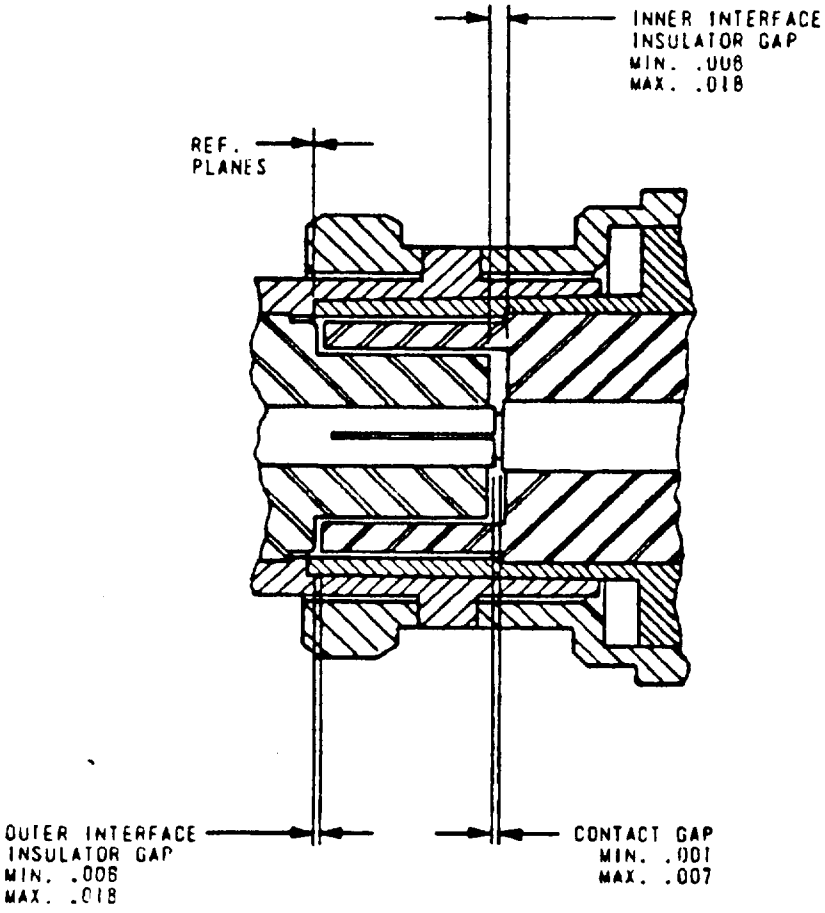

Inches	mm
.001	0.03
.006	0.15
.007	0.18
.018	0.46

FIGURE 404-3. Interface, mated test connector, series BNC.

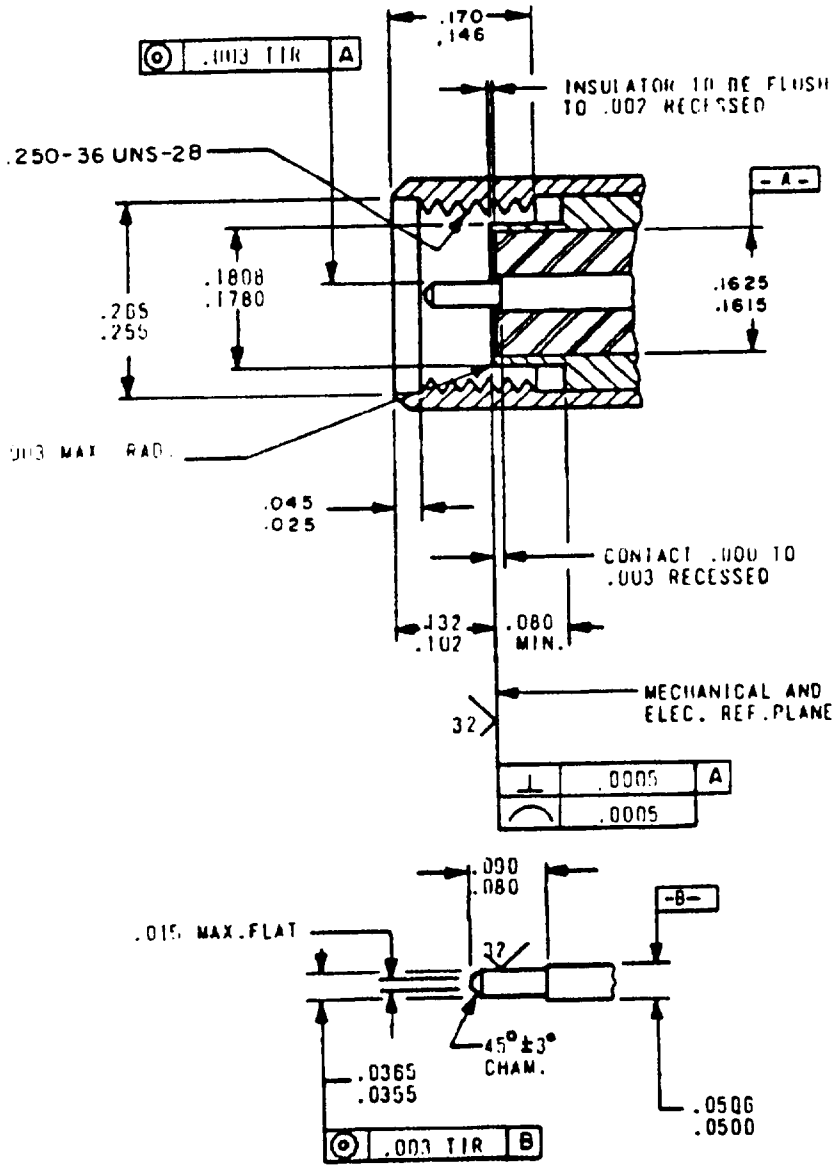

DETAIL OF INNER CONTACT

Inches	mm
.0005	0.01
.002	0.05
.003	0.08
.015	0.38
.025	0.64
.0355	0.90
.0365	0.93
.045	1.14
.0500	1.27
.0506	1.29
.080	2.03
.090	2.29
.102	2.59
.132	3.35
.146	3.71
.1615	4.10
.1625	4.13
.170	4.32
.1780	4.52
.1808	4.59
.250	6.35
.255	6.48
.265	6.73

FIGURE 405-1. Interface, test connector, series SMA, pin contact.