MIL-STD-242H(NAVY), PART 12
18 July 1984
SUPERSEDING
MIL-STD-242G(NAVY), PART II, Sections
100 - 107; 200 - 202; 700 - 704;
1200 - 1204; and 1600.

MILITARY STANDARD

ELECTRONIC EQUIPMENT PARTS
SELECTED STANDARDS

HARDWARE AND INSULATORS

FSC 59GP

DEPARTMENT OF DEFENSE
Washington, D.C. 20360

ELECTRONIC EQUIPMENT PARTS, SELECTED STANDARDS, HARDWARE AND INSULATORS

MIL-STD-242H(NAVY), PART 12

1. This Military Standard is approved for use by all Departments and Agencies of the Department of the Department of Defense.

2. Recommended corrections, additions, or deletions should be addressed to: Commander, Naval Electronic Systems Command, Attn: ELEX 8111, Department of the Navy, Washington, D.C. 20363.

FOREWORD

This Military Standard Part provides equipment designers and manufacturers with a list of insulators and hardware having quality levels most acceptable in the design and construction of military systems and equipments. It also will aid to control and minimize the life cycle cost, improve reliability of equipment, and minimize logistic support. The criteria used in selecting parts are as follows:

1. Application need: Parts must satisfy the widest range of design requiring reliable parts.

2. Technological maturity: The design of the part must be final and must use proven materials and technologies. It must have been in production for a period sufficient to ensure that the design and process parameters have been identified and adequate quality controls have been developed.

3. Availability: The part must be in production by a least one manufacturer whose previous performance indicates ability to qualify to specifications of this standard. There must also be reasonable expectation that the part will not be obsolescent for a least seven years. Microcircuits are excluded from this requirement because of rapid technological changes.

4. Test or usage history: Sufficient test or usage data to predict part reliability must be available.

In the event of conflict between the technical description of standard parts in this standard and the applicable specification, the applicable specification shall govern.

Technical information included in this standard was obtained from military specifications and standards; no warranty is made of data accuracy, or that inclusion of these parts will assure equipment/systems will meet performance requirements of any contracts. The contractor is responsible for conducting necessary tests and inspections of selected parts to ensure that contract requirements are met.

3

HARDWARE AND INSULATORS

TABLE OF CONTENTS

SUBJECT/SECTION		PAGE NUMBER
100	CAP	101.1
	101 MS25274	
150	CLIP	151.1 - .4
	151 W-C-440	
200	INSULATORS	
	201 MIL-I-23264	201.1 - .10
	203 MIL-I-23264	203.1 - .2
	205 MIL-I-23264	205.1 - .2
	207 MIL-I-23264	207.1 - .2
	209 MIL-I-23264	209.1 - .3
	211 MIL-I-23264	211.1
	213 MIL-I-23264	213.1
250	RIVETS	
	251 MIL-R-7885, MS20600, MS20601, MS20604	251.1 - .17
300	NUTS	
	301 MIL-N-25027	301.1 - .49
	VARIOUS MS SHEETS	
	321 MISC.	321.1 - .4
350	FASTENERS	
	351 MIL-F-8975, MS21140	351.1 - .4
	353 MIL-F-18240, MS15981	353.1 - .3
	355 MIL-F-22987, MS17731, MS17732	355.1 - .3
400	POSTS	
	401 MIL-P-55149	401.1 - .2
	411 MIL-P-55149	411.1 - .4
	421 MIL-P-55149	421.1 - .2
450	CLAMPS	
	451 MIL-C-85052	451.1 - .4
500	TERMINALS	
	501 MIL-T-55155	501.1 - .4
	503 MIL-T-55155	503.1 - .10
	505 MIL-T-55155	505.1 - .8
	521 MIL-T-55164	521.1 - .18
	523 MIL-T-55164	523.1 - .8
	525 MIL-T-55164	525.1
	527 MS27212	527.1 - .2

3

HARDWARE AND INSULATORS

TABLE OF CONTENTS (CONTINUED)

SUBJECT/SECTION	PAGE NUMBER
500 TERMINALS CONTINUED	
541 MIL-T-81714	541.1 - .5
543 MIL-T-81714	543.1 - .4
545 MIL-T-81714	545.1 - .2
547 MIL-T-81714	547.1
549 MIL-T-81714	549.1
561 MIL-T-55156	561.1 - .3
563 MIL-T-7928, MS17143, MS20659, MS21004, MS25036	563.1 - .12
565 MIL-T-16366	565.1 - .2
567 MS75004	567.1
569 MS17182	569.1
600 SCREWS	
601 MIL-F-18240	601.1 - .5
611 VARIOUS MS SHEETS	611.1 - .30
650 BOLTS	
651 MIL-B-7838, MS20004, MS20024	651.1 - .2
653 MIL-B-8831, MS14157, MS21134, MS21250	653.1 - .14
655 MIL-F-18240 VARIOUS BOLTS	655.1 - .9
700 SPLICES	
701 MIL-T-55156	701.1 - .4
711 MIL-T-16366	711.1
721 MS27429	721.1
731 MIL-S-81824	731.1
750 GROMMETS	
751 MS35489	751.1 - .2
800 WASHERS	
801 MIL-N-25027	801.1
821 VARIOUS WASHERS	821.1 - .7
850 BEARINGS	
851 MIL-B-3990, VARIOUS MS SHEETS	851.1 - .6
853 MIL-B-81820, VARIOUS MS SHEETS	853.1 - .5
855 MIL-B-81935	855.1 - .3
857 MIL-B-81936	857.1 - .3
859 MIL-B-81934	859.1 - .3

HARDWARE AND INSULATORS

TABLE OF CONTENTS (CONT.)

SUBJECT/SECTION	PAGE NUMBER
900 KNOBS	
901 MIL-K-3926, MS91528 REGULAR	901.1 - .20
903 MIL-K-3926, MS91528 CONCENTRIC	903.1 - .4
905 MIL-K-3926, MS91528 TACTILE	905.1 - .4
910 MIL-K-3926, MS91524, MS91525	910.1 - .2

7

HARDWARE AND INSULATORS

1. SCOPE

1.1 Scope. This standard establishes the requirements for the selection of hardware and insulators used in the design and manufacture of Navy equipment.

1.2 Purpose. The purpose of this standard is to control and minimize the variety of hardware and insulators in Navy equipment in order to facilitate effective logistic support, improve quality, and reduce cost.

2. APPLICABLE DOCUMENTS

2.1 Government documents.

2.1.1 Specifications, standards, and handbooks. Unless otherwise specified, the following specifications, standards, and handbooks of the issue listed in that issue of the Department of Defense Index of Specifications and Standards (DoDISS) specified in the solicitation form a part of this standard to the extent specified herein.

SPECIFICATIONS

FEDERAL

W-C-440	Clip, Electrical, General Specification For

MILITARY

MIL-B-3990	Bearing, Roller, Needle, Airframe, Antifriction
MIL-B-7838	Bolt, Internal Wrenching, 160 Ksi Ftu
MIL-R-7885	Rivet, Blind, Structural, Pull Stem And Chemically Expanded
MIL-T-7928	Terminal, Lug And Splice, Crimp-Style, Copper
MIL-B-8831	Bolt, 180 Ksi Ftu And 108 Ksi Ftu, 450 Degrees F, Protruding and Flush Head, General Specification
MIL-F-8975	Fastener (Bolts) Blind, High Strength, Installation Formed, Corrosion Resistant Steel, Heat Resistant Steel, And Titanium, General Specification
MIL-T-16366	Terminal, Electrical Lug And Conductor Splices, Crimp Style
MIL-F-18240	Fastener, Externally Thread, 250 Degrees F, Self Locking Element For
MIL-F-22978	Fastener, Rotary, Quick-Operating, High Strength (ASG)
MIL-I-23264	Insulator, Standoff (Style 01, 02, 03, 04, and 06)
MIL-N-25027	Nut, Self-locking, 250 Degrees F And 800 Degrees F, 125 Ksi Ftu, 60 Ksi Ftu, And 30 Ksi Ftu
MIL-P-55149	Post, Binding, Electrical (Insulated And Uninsulated) General Specification
MIL-T-55155	Terminals, Feedthru (Insulated) And Terminal Stud (Insulated And Noninsulated)
MIL-T-55156	Terminal, Lug Splices, Conductor, Screw Type, General Specification
MIL-T-55164	Terminal Boards, Molded, Barrier, Screw And Stud Types, And Associated Accessories, General Specification
MIL-T-81714	Terminal Junction Systems, General Specification
MIL-B-81820	Bearing, Plain, Self Aligning, Self Lubricating, Low Speed Oscillation
MIL-S-81824	Splice, Electric, Permanent, Crimp Style, Copper, Insulated, Environment Resistant
MIL-B-81934	Bearing, Sleeve, Plain And Flanged, Self Lubricating
MIL-B-81935	Bearing, Plain, Rod End, Self-aligning, Self-lubricating
MIL-B-81936	Bearing, Plain, Self-aligning (Becu Ball, Cres Race)
MIL-C-85052	Clamp, Loop, Cushion, General Specification

9

STANDARDS

MILITARY

MIL-STD-1277	Splices, Chips, Terminals, Terminal Boards, Binding Posts, Electrical
MIL-STD-1312	Fasteners, Test Methods
MIL-STD-1762	Bearings And Bushings, Plain, Preferred For Design, Listing Of
MS 14101	Bearing, Plain, Self-lubricating, Self-aligning, Low Speed, Narrow, Grooved Outer Ring, -65 To 325 Degrees F
MS 14102	Bearing, Plain, Self-lubricating, Self-aligning, Low Speed, Wide, Chamfered Outer Ring, -65 To 325 Degrees F
MS 14103	Bearing, Plain, Self-lubricating, Self-aligning, Low Speed, Wide, Grooved Outer Ring, -65 To 325 Degrees F
MS 14104	Bearing, Plain, Self-lubricating, Self-aligning, Low Speed, Narrow, Chamfered Outer Ring, -65 To 325 Degrees F
MS 14157	Bolt, Wheel, Tension, Flanged Steel, 180 Ksi Ftu, 450 Degrees F, External Spline Drive
MS 15795	Washer, Flat Metal, Round, General Purpose
MS 16995	Screw, Cap, Socket Head And Hexagon, Corrosion Resisting Steel, UNC-3A
MS 16996	Screw, Cap, Socket Head And Hexagon, Corrosion Resisting Steel, UNF-3A
MS 17143	Terminal, Lug, Crimp Style, Copper, Insulated, Rectangular Tongue, Type II, Class 1 For 105 Degrees C Total Conductor Temperature
MS 17182	Terminal, Lug, Crimp Style, Copper, Insulated (Servo Components) Type II, Class 1, For 125 Degrees C Total Conductor Temperature
MS 17731	Fastener, Rotary, Quick Operating, Flush Head, Floating Type, 2210 Lbs Min Tensile Strength
MS 17732	Fastener, Rotary, Quick Operating, Protruding Head, Floating Type, 2210 Lbs Min Tensile Strength
MS 20004	Bolt, Internal Wrenching, 160 Ksi Ftu And 96 Ksi Fsu
MS 20005	Bolt, Internal Wrenching, 160 Ksi Ftu And 96 Ksi Fsu
MS 20006	Bolt, Internal Wrenching, 160 Ksi Ftu And 96 Ksi Fsu
MS 20007	Bolt, Internal Wrenching, 160 Ksi Ftu And 96 Ksi Fsu
MS 20008	Bolt, Internal Wrenching, 160 Ksi Ftu And 96 Ksi Fsu
MS 20009	Bolt, Internal Wrenching, 160 Ksi Ftu And 96 Ksi Fsu
MS 20010	Bolt, Internal Wrenching, 160 Ksi Ftu And 96 Ksi Fsu
MS 20011	Bolt, Internal Wrenching, 160 Ksi Ftu And 96 Ksi Fsu
MS 20012	Bolt, Internal Wrenching, 160 Ksi Ftu And 96 Ksi Fsu
MS 20013	Bolt, Internal Wrenching, 160 Ksi Ftu And 96 Ksi Fsu
MS 20014	Bolt, Internal Wrenching, 160 Ksi Ftu And 96 Ksi Fsu
MS 20015	Bolt, Internal Wrenching, 160 Ksi Ftu And 96 Ksi Fsu
MS 20016	Bolt, Internal Wrenching, 160 Ksi Ftu And 96 Ksi Fsu
MS 20017	Bolt, Internal Wrenching, 160 Ksi Ftu And 96 Ksi Fsu
MS 20018	Bolt, Internal Wrenching, 160 Ksi Ftu And 96 Ksi Fsu
MS 20019	Bolt, Internal Wrenching, 160 Ksi Ftu And 96 Ksi Fsu
MS 20020	Bolt, Internal Wrenching, 160 Ksi Ftu And 96 Ksi Fsu
MS 20021	Bolt, Internal Wrenching, 160 Ksi Ftu And 96 Ksi Fsu
MS 20022	Bolt, Internal Wrenching, 160 Ksi Ftu And 96 Ksi Fsu
MS 20023	Bolt, Internal Wrenching, 160 Ksi Ftu And 96 Ksi Fsu
MS 20024	Bolt, Internal Wrenching, 160 Ksi Ftu And 96 Ksi Fsu
MS 20600	Rivet, Blind, Structural Pull Stem, Self-Plugging, Protruding Head, Type I
MS 20601	Rivet, Blind, Structural Pull Stem, Self Plugging, 100 Deg. Flush Head, Type II
MS 20604	Rivet, Blind, Nonstructural, Universal Head, Class I
MS 20659	Terminal Lug, Crimp Style, Copper, Uninsulated, Ring Tongue, Type I, Class 1
MS 21004	Terminal, Lug, Uninsulated, Rectangular Tongue, Crimp Style Copper, Type I, Class 1, For 175 Deg. C Total Conductor Temperature
MS 21091	Bolt, Self-locking, 250 Deg. F, Steel 75 Ksi Fsu, 125 Ksi Ftu 100 Deg Flush Head Cross Recessed

MS 21092	Bolt, Self-locking, 250 Deg. F, CRES 48 Ksi, Fsu, 80 Ksi Fsu, 100 Deg Flush Head, Cross Recessed
MS 21094	Bolt, Self-locking, 250 Deg. F, Steel 75 Ksi Fsu, 125 Ksi Ftu, Hex Head
MS 21095	Bolt, Self-locking, 250 Deg. F, CRES 48 Ksi Fsu, 80 Ksi Ftu, Hex Head
MS 21096	Bolt, Self-locking, 250 Deg. F, Steel, 75 Ksi Fsu, 125 Ksi Ftu, Pan Head, Cross Recessed
MS 21097	Bolt, Self-locking, 250 Deg. F, CRES 48 Ksi Fsu, 80 Ksi Ftu, Pan Head, Cross Recessed
MS 21098	Bolt, Self-locking, Steel, 160 Ksi, Ftu 250 Deg. F., 12 Point, External Wrenching (Externally Wrenching Cap Screw)
MS 21099	Bolt, Self-locking, Corrosion Resisting Steel, 80 Ksi Ftu, 250 Deg. F., 12 Point, External Wrenching (Externally Wrenching Cap Screws)
MS 21134	Bolt, Tension, Steel, 180 Ksi Ftu, 450 Degrees F., External Wrenching, Spline Drive, Flanged
MS 21140	Fastener, Blind, High Strength, Pull Type, Positive Mechanical Lock, 100 Degrees Flush Head, Corrosion Resisting Steel 95 Ksi Fsu
MS 21250	Bolt, Tension Steel, 180 Ksi Ftu, 450 Degrees F, 12 Point, External Wrenching Flanged
MS 21432	Bearing, Roller, Needle, Track Roller, Integral Stud, Type VII, Antifriction, Inch
MS 21438	Bearing, Roller, Needle, Single Row, Heavy Duty, Track Roller, Sealed, Type V, Antifriction, Inch
MS 21439	Bearing, Roller, Needle, Double Row, Heavy Duty, Track Roller, Sealed, Type VI, Antifriction, Inch
MS 24463	Bearing, Roller, Needle Single Row, Heavy Duty, Self-aligning, Type III, Antifriction, Inch
MS 24464	Bearing, Roller, Needle-double Row, Heavy Duty, Self-aligning, Type IV, Antifriction, Inch
MS 24679	Nut, Plain Cap, Low Crown, UNC-2B, And UNF-2B
MS 25036	Terminal, Lug, Crimp Style, Copper, Insulated, Ring Tongue, Bell Mouthed, Type II, Class 1 (For 105 Deg. C Total Conductor Temperature)
MS 25274	Cap, Electrical (Wire End, Crimp Style, Type II, Class 1) For 105 Deg. C Total Conductor Temperature
MS 27212	Terminal Board, Assembly, Molded-In Stud, Electric
MS 27429	Splice, Conductor, Disconnect, Crimp Style, Copper, Insulated Barrel, Type II, Class 1 For 105 Deg. C Total Conductor Temperature
MS 35307	Screw, Cap, Hexagon (Finished Hexagon Bolt), Steel, Corrosion Resisting, Passivated, UNC-2A
MS 35333	Washer, Lock, Flat Internal Tooth
MS 35335	Washer, Lock, Flat-external Tooth (In./mm)
MS 35336	Washer, Lock, Countersunk, 80 Deg. - 82 Deg., External Tooth (In./mm)
MS 35338	Washer, Lock-spring, Helical, Regular (Medium) Series
MS 35489	Grommet, Synthetic And Silicone Rubber, Hot Oil And Coolant Resistant
MS 35691	Nut, Plain, Hexagon (Jam) UNC-2B And UNF-2B
MS 51848	Washer, Lock-helical Spring, Hi-collar
MS 51957	Screw, Machine-pan Head, Cross-recessed, Corrosion Resisting Steel, Passivated, UNC-2A
MS 51958	Screw, Machine-pan Head, Cross-recessed, Corrosion Resisting Steel, UNF-2A
MS 51959	Screw, Machine-flat, Countersunk Head, 82 Deg., Cross-recessed, Corrosion Steel
MS 51960	Screw, Machine Flat Countersunk Head, 82 Deg., Cross Recessed, Corrosion Resisting Steel, UNF-2A
MS 75004	Adapter, Battery Terminal (Storage Battery)

(Copies of specifications and standards required by manufacturers in connection with specific acquisition functions should be obtained from the contracting activity or as directed by the contracting officer.)

3. DEFINITIONS

3.1 Terms. The terms used in this standard are defined in the referenced documents.

4. GENERAL REQUIREMENTS

4.1 Device selection. Selection of devices shall be made from types listed in this standard. The variety of types used in any Navy equipment shall be the minimum necessary to provide satisfactory performance and the contractor (hardware designer/builder) shall exercise all reasonable design choice to achieve this objective.

4.2 Criteria for inclusion in the standard. Following is the criteria for inclusion herein:

a. The device must satisfy a wide range of design requirements;
b. At least one manufacturer is qualified to the applicable detail specification;
c. There is reasonable assurance that the device will be available for at least seven years.

4.3 Characteristics. The characteristics listed herein are for reference only and are intended as an aid in selecting devices. The applicable detail specification shall be used for all final design criteria.

4.4 Conflict of data. In the event of conflict between the technical description of devices in this standard and the applicable detail specification, the detail specification shall govern.

5. IDENTIFICATION

5.1 Component identification. Component identification is the part number or type designator as listed in this standard.

Review activities:
Navy - AS, SH

User activity:
Navy - MC

Preparing activity:
NAVY - EC

(Project Number 59GP-N031-12)

CAP, WIRE END, TYPE II, CLASS 1

MS25274

SCOPE: THIS SECTION COVERS WIRE END CAPS FOR CRIMP STYLE TERMINAL LUGS.

PART NUMBER EXAMPLE: MS25274 -2

MILITARY STANDARD

DASH NUMBER

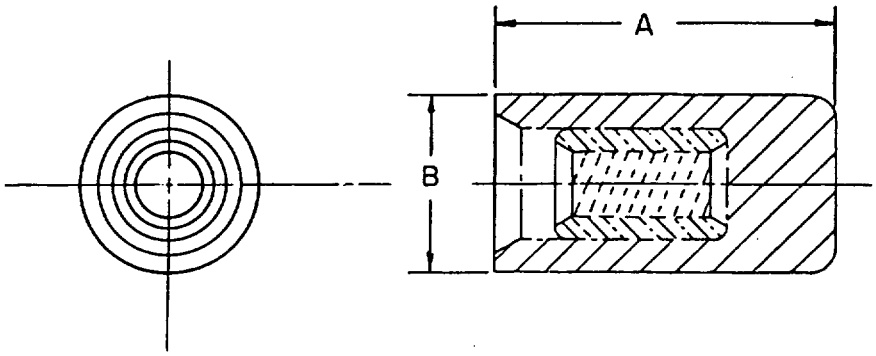

TABLE I. PART NUMBER AND CHARACTERISTICS.

PART NUMBER MS25274-	WIRE SIZE	DIMENSIONS		COLOR CODE
		A(MAX)	B(MAX)	
2	22-18	.480	.215	RED
3	16-14		.245	BLUE
4	12-10		.315	YELLOW

P3

CLIP, ELECTRICAL

W-C-440

SCOPE: THIS SECTION COVERS ELECTRICAL CLIPS, INSULATED AND UNINSULATED.

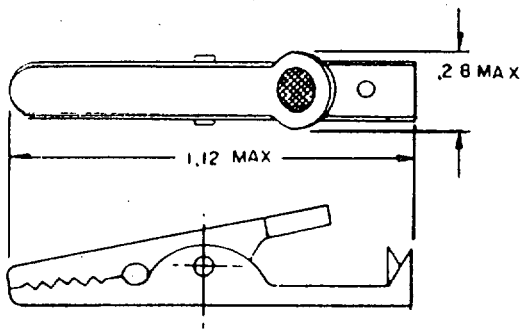

FIGURE 1. TYPE TCM CLIP, ELECTRICAL

ITEM NO.	JAW OPENING (MIN)	NOMINAL CURRENT RATING (AMP)	MATERIAL
1	19	5	COPPER

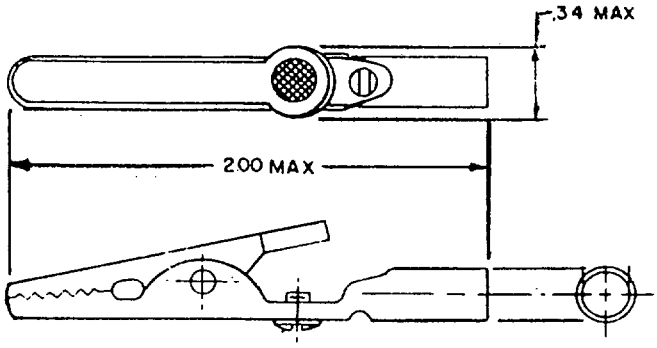

FIGURE 2. TYPE TC CLIP, ELECTRICAL

ITEM NO.	JAW OPENING (MIN)	NOMINAL CURRENT RATING (AMP)	MATERIAL
1	.31	10	COPPER

15

CLIP, ELECTRICAL

W-C-440

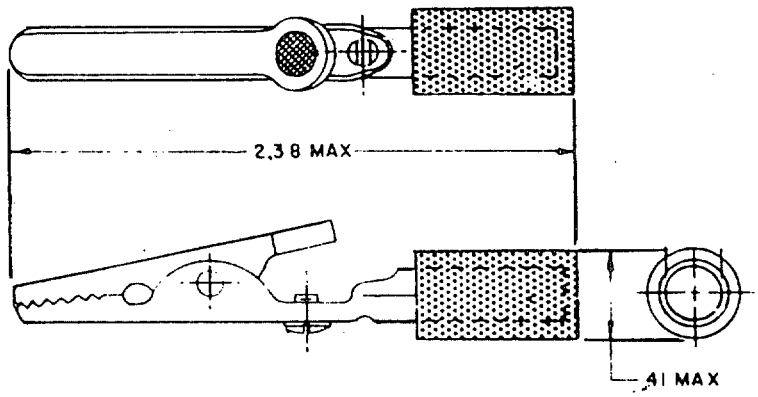

FIGURE 3. TYPE TCI CLIP, ELECTRICAL

ITEM NO.	JAW OPENING (MIN)	NOMINAL CURRENT RATING (AMP)	INSULATOR COLOR	MATERIAL
1 2	.31	10	RED BLACK	COPPER

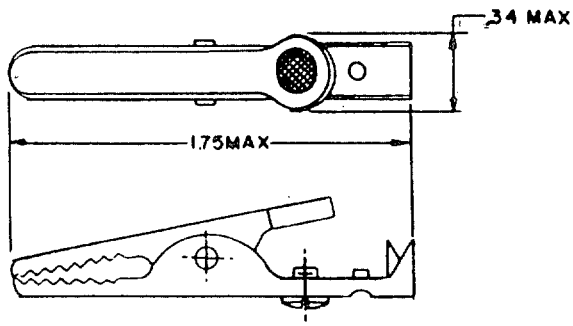

FIGURE 4. TYPE TCC CLIP, ELECTRICAL

ITEM NO.	JAW OPENING (MIN)	NOMINAL CURRENT RATING (AMP)	MATERIAL
1	.31	10	COPPER

CLIP, ELECTRICAL

W-C-440

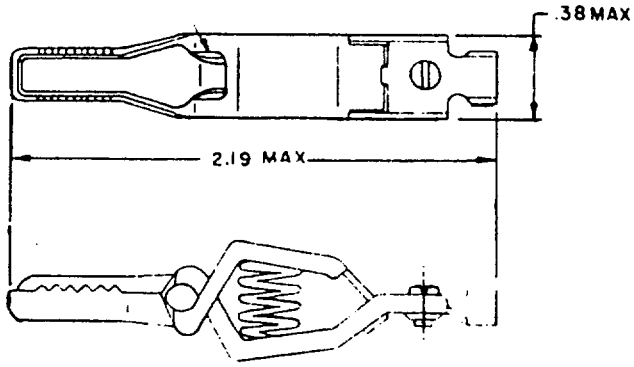

FIGURE 5. TYPE CC CLIP, ELECTRICAL

ITEM NO.	JAW OPENING (MIN)	CURRENT RATING (AMP)	MATERIAL
1	.31	10	COPPER

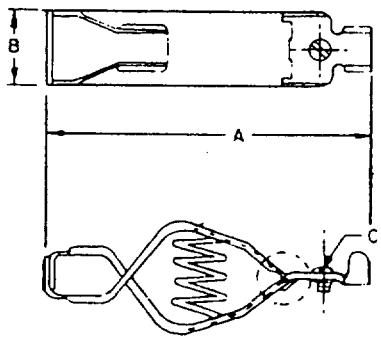

FIGURE 6. TYPE PC CLIP, ELECTRICAL

ITEM NO.	A (MAX)	B (MAX)	C ATTACHING HARDWARE	JAW OPENING (MIN)	NOMINAL CURRENT RATING (AMP)	MATERIAL
1	1.62	.31	6-32UNC OR 6-40 UNF2A X 5/32 LG.	.25	10	COPPER
2	2.12	.38	6-32UNC-2A X 3/16 LG.	.44	20	COPPER
3	2.44	.50	6-32UNC-2A X 3/16 LG.	.62	40	COPPER
4	3.12	.69	3-32UNC-2A X 1/4 LG.	.75	50	COPPER

17

CLIP, ELECTRICAL

W-C-440

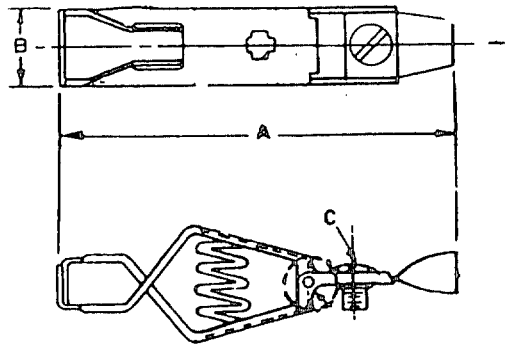

FIGURE 7. TYPE PCL CLIP, ELECTRICAL

ITEM NO.	DIMENSIONS A (MAX)	B (MAX)	C ATTACHING HARDWARE	JAW OPENING (MIN)	NOMINAL CURRENT RATING (AMP)	MATERIAL
1	4.75	.81	10-32UNF-2A 5/16 LG.	1.06	100	COPPER
2	6.25	1.12	1/4-20UNC-2A 7/16 LG., WASHER LOCK, SPLIT FOR SIZE 1/4 SCREW NUT, HEX 1/4-20UNC-2B	1.62	200	COPPER
3	8.00	1.44	5/16-18UNC-2A X 1/2 LG.,WASHER, LOCK SPLIT FOR SIZE 5/16 SCREW NUT, HEX 5/16, 18UNC-2B	2.000	300	COPPER

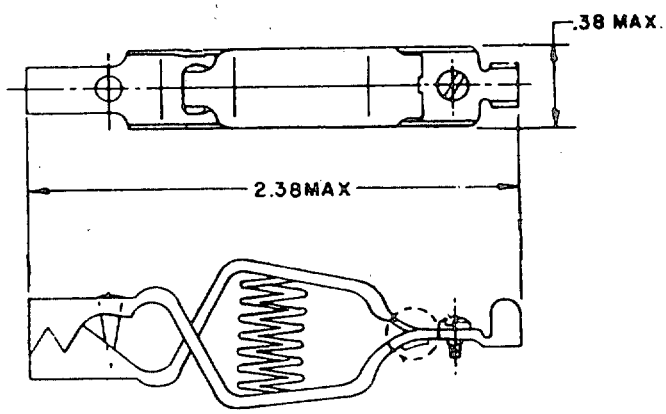

FIGURE 8. TYPE NC CLIP, ELECTRICAL

ITEM NO.	JAW OPENING (MIN)	NOMINAL CURRENT RATING (AMP)	MATERIAL
1	.50	20	COPPER

18 July 1984

INSULATORS, CERAMIC, ELECTRICAL AND ELECTRONIC

MIL-I-23264

SCOPE: THIS SECTION COVERS ELECTRICAL AND ELECTRONIC CERAMIC INSULATORS FABRICATED FROM MATERIALS CONFORMING TO MIL-I-10. THESE INSULATORS ARE INTENDED FOR USE AS ELECTRICAL-INSULATING ELEMENTS IN COMPONENTS AND PARTS, OR AS INSULATORS IN SUBASSEMBLIES AND EQUIPMENTS.

TYPE DESIGNATION: NL 422 B 14 004

CLASS — NL

INSULATING COMPOUND — 422

FINISH — B-- BROWN GLAZE; W-- WHITE GLAZE — B

STYLE — 14

LENGTH — 004

INSULATORS, STANDOFF (STYLES 01, 02, 03, 04, AND 06)

MIL-I-23264/1

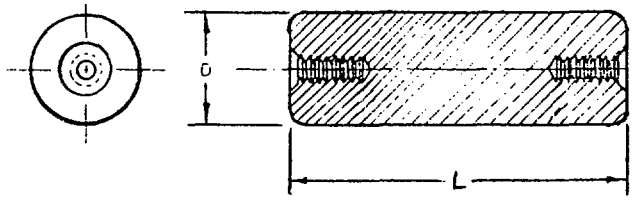

STYLES 01, 02, 03, 04, 05

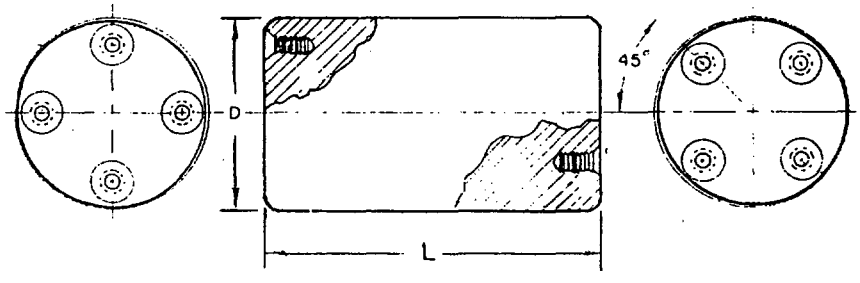

201.1 STYLE 06

INSULATORS, STANDOFF (STYLES 01, 02, 03, 04, AND 06)

MIL-I-23264/1

TABLE I. TYPE DESIGNATION AND DIMENSIONS.

TYPE DESIGNATOR	DIMENSIONS	
	D	L
NL422B01-004	.375	.500
NL422W01-004		
NL422B01-005		.625
NL422W01-005		
NL422B01-006		.750
NL422W01-006		
NL422B01-008		1.000
NL422W01-008		
NL422B01-010		1.250
NL422W01-010		
NL422B01-012		1.500
NL422W01-012		
NL422B01-016		2.000
NL422W01-016		
NL422B02-005	.500	.625
NL422W02-005		
NL422B02-006		.750
NL422W02-006		
NL422B02-008		1.000
NL422W02-008		
NL422B02-010		1.250
NL422W02-010		
NL422B02-012		1.500
NL422W02-012		
NL422B02-016		2.000
NL422W02-016		
NL422B02-020		2.500
NL422W02-020		
NL422B02-024		3.000
NL422W02-024		
NL422B03-008	.750	1.000
NL422W03-008		
NL422B03-010		1.250
NL422W03-010		
NL422B03-012		1.500
NL422W03-012		
NL422B03-016		2.000
NL422W03-016		
NL422B03-020		2.500
NL422W03-020		
NL422B03-024		3.000
NL422W03-024		
NL422B03-032		4.000
NL422W03-032		

INSULATORS, STANDOFF (STYLES 01, 02, 03, 04, AND 06)

MIL-I-23264/1

TABLE I. TYPE DESIGNATION AND DIMENSIONS. (CONT.)

TYPE DESIGNATOR	DIMENSIONS	
	D	L
NL422B04-010	1.000	1.250
NL422W04-010		
NL422B04-012		1.500
NL422W04-012		
NL422B04-016		2.000
NL422W04-016		
NL422B04-020		2.500
NL422W04-020		
NL422B04-024		3.000
NL422W04-024		
NL422B04-032		4.000
NL422W04-032		
NL422B04-040		5.000
NL422W04-040		
NL422B04-048		6.000
NL422W04-048		
NL422B06-008	1.750	1.000
NL422W06-008		
NL422B06-010		1.250
NL422W06-010		
NL422B06-012		1.500
NL422W06-012		
NL422B06-016		2.000
NL422W06-016		
NL422B06-020		2.500
NL422W06-020		
NL422B06-024		3.000
NL422W06-024		
NL422B06-032		4.000
NL422W06-032		
NL422B06-040		5.000
NL422W06-040		

21

INSULATORS, STANDOFF (STYLES 10, 11, 12, 13, AND 14)

MIL-I-23264/2

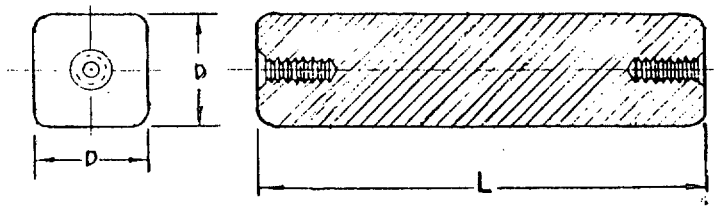

FIGURE 1A. STYLES 10, 11, 12, 13

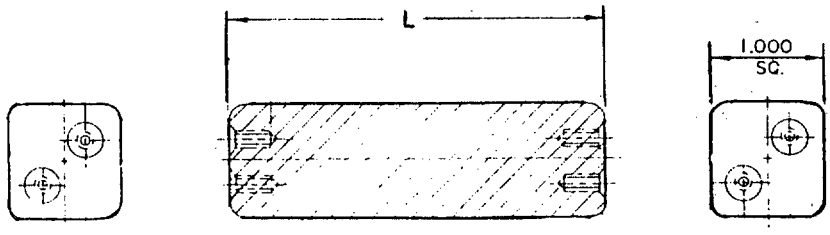

FIGURE 1B. STYLE 14

TABLE I. TYPE DESIGNATION AND DIMENSIONS.

TYPE DESIGNATOR	DIMENSIONS	
	D	L
NL422B10-004	.375	.500
NL422W10-004		
NL422B10-005		.625
NL422W10-005		
NL422B10-006		.750
NL422W10-006		
NL422B10-008		1.000
NL422W10-008		
NL422B10-010		1.250
NL422W10-010		
NL422B10-012		1.500
NL422W10-012		
NL422B10-016		2.000
NL422W10-016		
NL422B11-006	.500	.750
NL422W11-006		
NL422B11-008		1.000
NL422W11-008		
NL422B11-010		1.250
NL422W11-010		
NL422B11-012		1.500
NL422W11-012		
NL422B11-016		2.000
NL422W11-016		
NL422B11-020		2.500
NL422W11-020		

INSULATORS, STANDOFF (STYLES 10, 11, 12, 13, AND 14)

MIL-I-23264/2

TABLE I. TYPE DESIGNATION AND DIMENSIONS. (CONT.)

TYPE DESIGNATOR	DIMENSIONS	
	D	L
NL422B12-008	.750	1.000
NL422W12-008		
NL422B12-010		1.250
NL422W12-010		
NL422B12-012		1.500
NL422W12-012		
NL422B12-016		2.000
NL422W12-016		
NL422B12-020		2.500
NL422W12-020		
NL422B12-024		3.000
NL422W12-024		
NL422B12-032		4.000
NL422W12-032		
NL422B13-012	1.000	1.500
NL422W13-012		
NL422B13-016		2.000
NL422W13-016		
NL422B13-020		2.500
NL422W13-020		
NL422B13-024		3.000
NL422W13-024		
NL422B13-032		4.000
NL422W13-032		
NL422B14-008	SEE FIGURE 1B.	1.000
NL422W14-008		
NL422B14-010		1.250
NL422W14-010		
NL422B14-012		1.500
NL422W14-012		
NL422B14-016		2.000
NL422W14-016		
NL422B14-020		2.500
NL422W14-020		
NL422B14-024		3.000
NL422W14-024		
NL422B14-032		4.000
NL422W14-032		
NL422B14-040		5.000
NL422W14-040		
NL422B14-048		6.000
NL422W14-048		

23

INSULATORS, STANDOFF (STYLES 19 AND 20)

MIL-I-23264/3

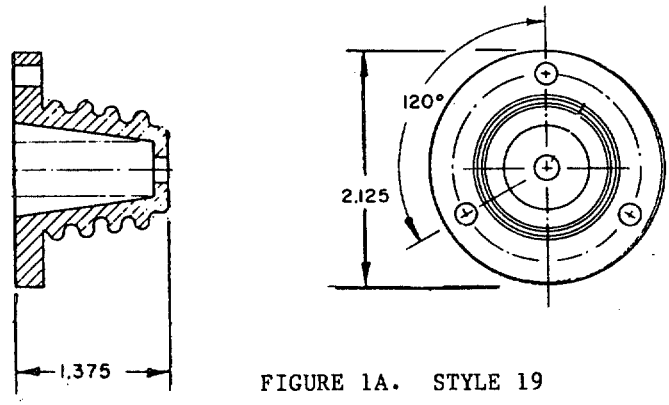

FIGURE 1A. STYLE 19

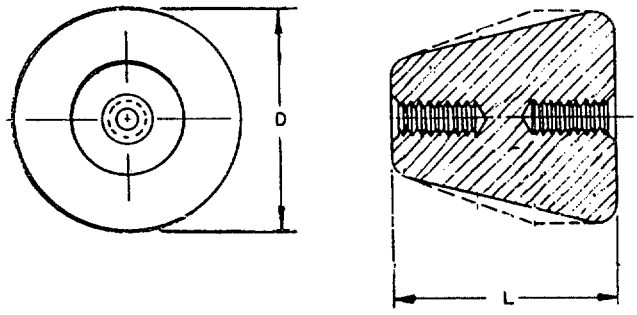

FIGURE 1B. STYLE 20

TABLE I. TYPE DESIGNATION AND DIMENSIONS.

TYPE DESIGNATOR	DIMENSIONS	
	D	L
NL422B19-011	SEE FIGURE 1A.	
NL422B20-008 NL422W20-008	1.000	1.000
NL422B20-012 NL422W20-012		1.500
NL422B20-016 NL422W20-016		2.000

INSULATORS, STANDOFF (STYLE 21)

MIL-I-23264/4

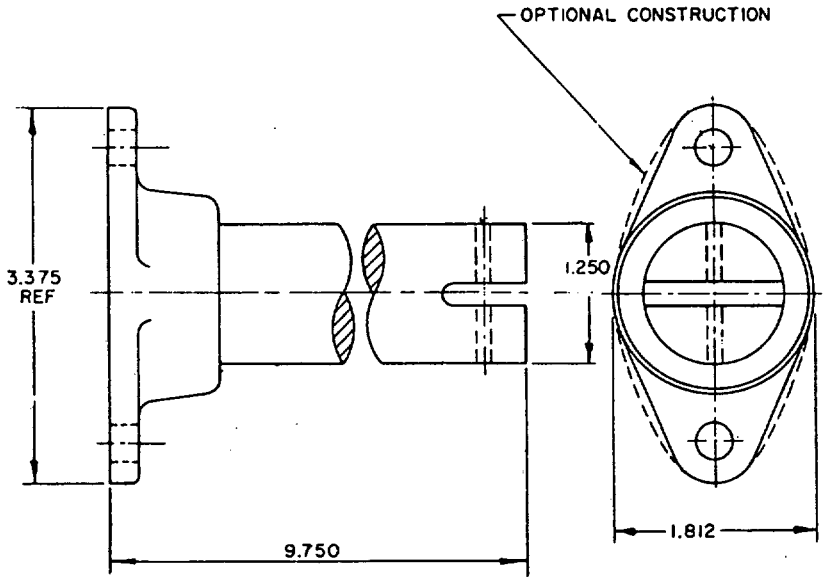

TYPE DESIGNATOR

NL422B21-078

25

INSULATORS, STANDOFF (STYLE 26)

MIL-I-23264/5

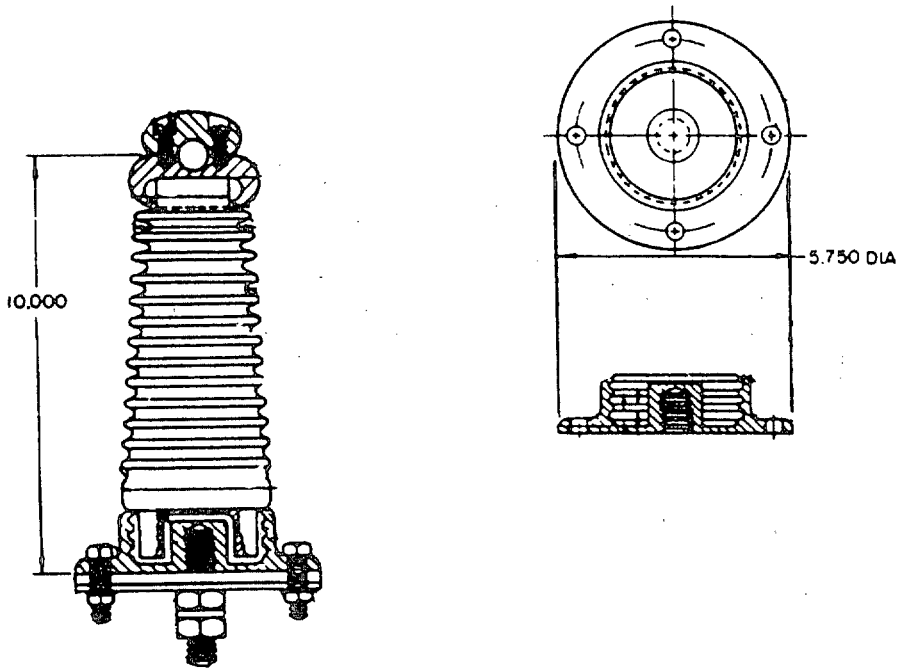

TYPE DESIGNATOR

NL422B26-080
NL422W26-080

INSULATORS, STANDOFF (STYLE 27)

MIL-I-23264/6

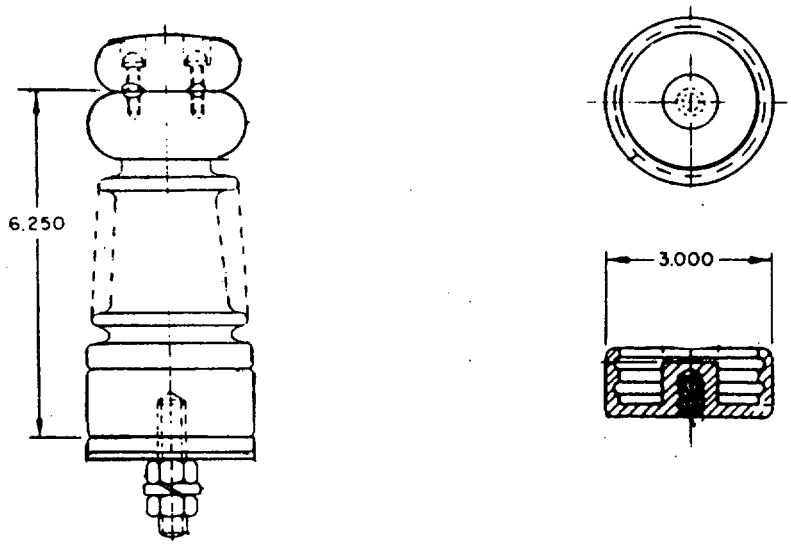

TYPE DESIGNATOR

NL422B27-050
NL422W27-050

INSULATORS, STANDOFF (STYLE 28)

MIL-I-23264/7

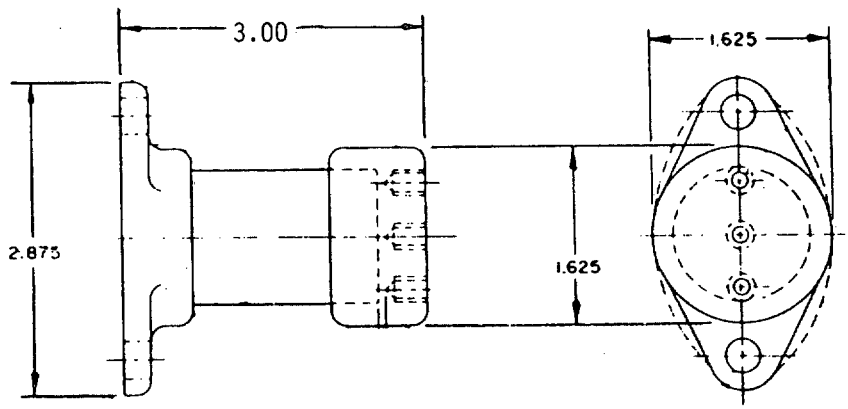

TYPE DESIGNATOR

NL422B28-024
NL422W28-024

INSULATORS, FEEDTHRU (STYLE 34)

MIL-I-23264/13

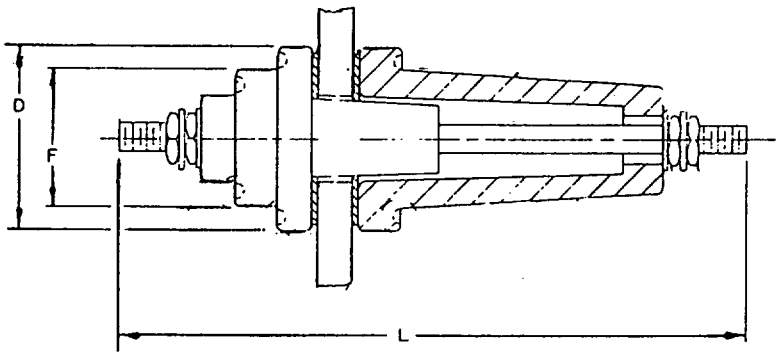

TABLE I. TYPE DESIGNATION AND DIMENSIONS.

TYPE DESIGNATOR	DIMENSIONS		
	D	F	L
NL422B34-013	.688	---	1.688
NL422B34-018	.688	---	2.250
NL422B34-046	1.625	1.187	5.750

29

INSULATORS, FEEDTHRU (STYLES 35 AND 36)

MIL-I-23264/14

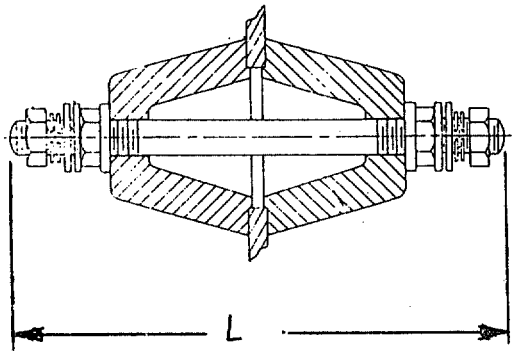

IGURE 1A. STYLES NL422B AND W35-025

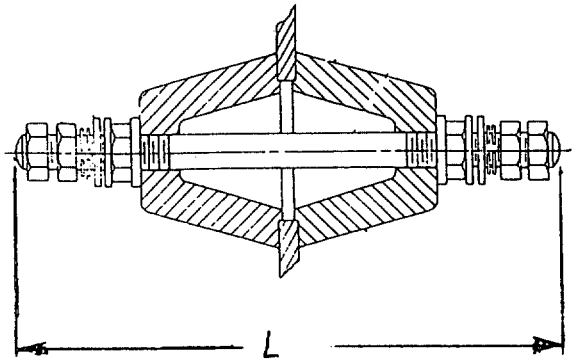

FIGURE 1B. STYLES NL422B AND W35-039

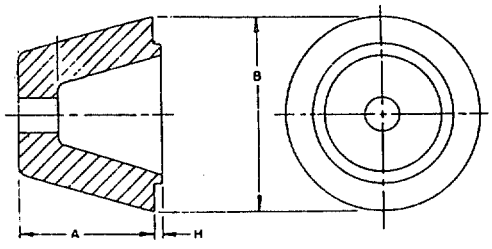

FIGURE 1C. STYLES NL422B AND W35-039

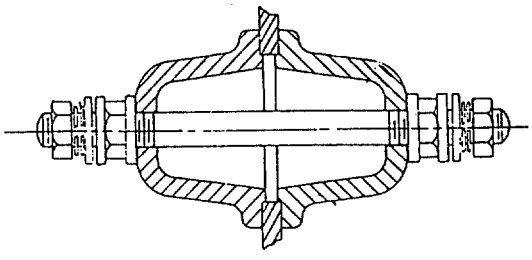

FIGURE 1D. STYLES NL422B AND W36-048

TABLE I. TYPE DESIGNATION AND DIMENSIONS.

TYPE DESIGNATOR	DIMENSIONS			
	A	B	H	L
NL422B35-025 NL422W35-025	.875	1.250	.032	3.125
NL422B35-039 NL422W35-039	1.125	1.750	.062	4.938
NL422B36-048 NL422W36-048	1.625	2.500	.047	6.000

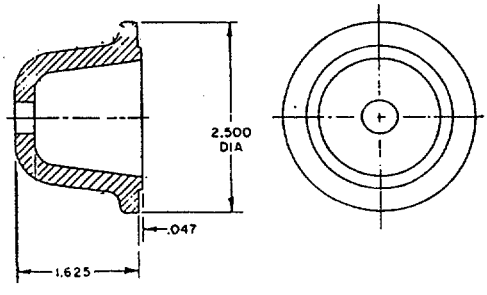

FIGURE 1E. STYLES NL422B AND W36-048

INSULATORS, BUSHING (STYLE 41 AND 42)

MIL-I-23264/16

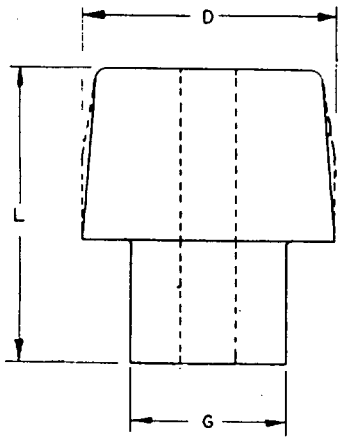

STYLE 41

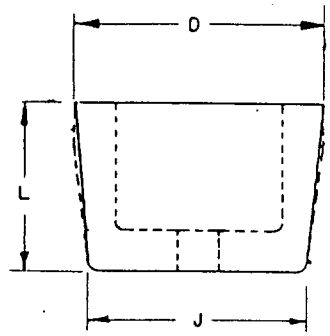

STYLE 42

TABLE I. TYPE DESIGNATOR AND DIMENSIONS

TYPE DESIGNATOR	DIMENSIONS			
	D	G	J	L
NL422B41-001 NL422W41-001	.500	.234	.375	.625
NL422B41-002 NL422W41-002	.625	.344	.500	.625
NL422B41-003 NL422W41-003	.875	.469	.750	.875
NL422B41-004 NL422W41-004	1.125	.703	1.000	1.312
NL422B42-001 NL422W42-001	.500	---	.375	.375
NL422B42-002 NL422W42-002	.625	---	.500	.375
NL422B42-003 NL422W42-003	.875	---	.750	.500
NL422B42-004 NL422W42-004	1.125	---	1.000	.750

INSULATORS, BUSHING (STYLE 43)

MIL-I-23264/17

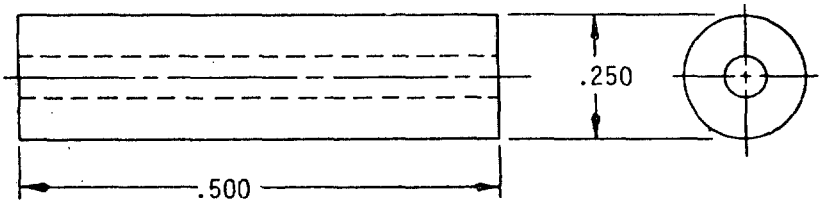

TYPE DESIGNATOR

NL422B43-004
NL422W43-004

INSULATORS, BOWL (STYLES 55, 56, 57)

MIL-I-23264/18

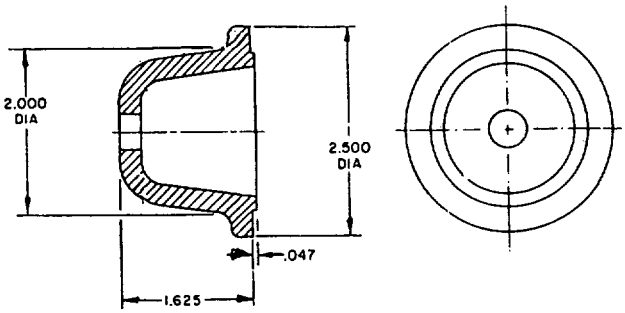

STYLE 56

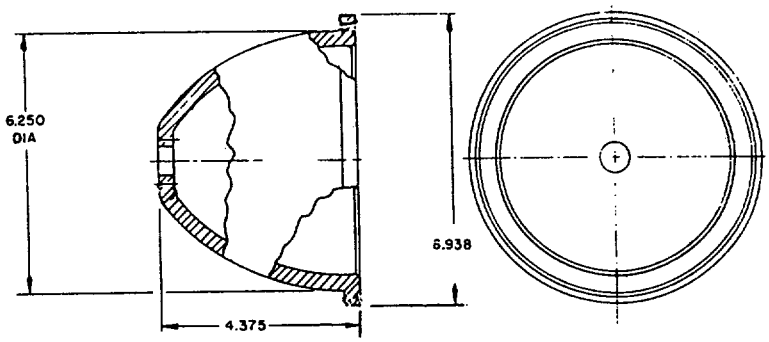

STYLE 57

TYPE DESIGNATOR

NL422B55-009
NL422W55-009
NL422B56-013
NL422W56-013
NL422B57-035
NL422W57-035

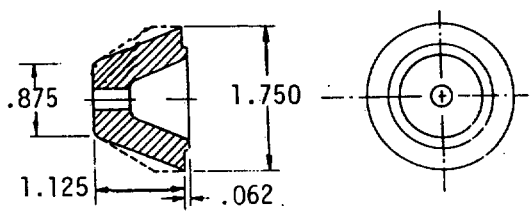

STYLE 55

INSULATORS, BOWL (STYLES 58)

MIL-I-23264/19

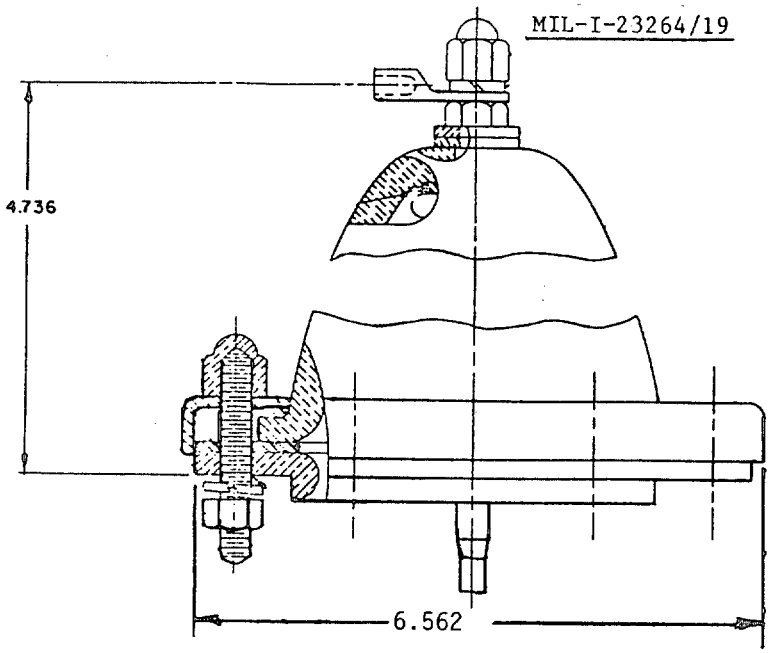

NL422B58-055

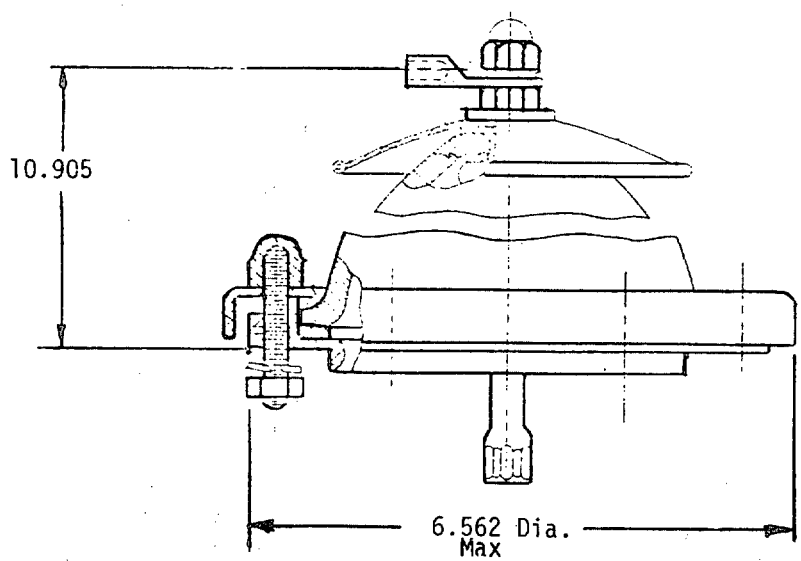

NL422B58-122

TYPE DESIGNATOR

NL422B58-055
NL422B58-122

INSULATORS, STRAIN (STYLE 66)

MIL-I-23264/20

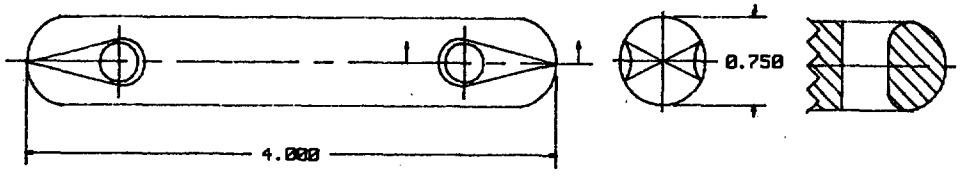

TYPE DESIGNATOR

NL422B66-024

35

INSULATORS, STRAIN (STYLE 71)

MIL-I-23264/21

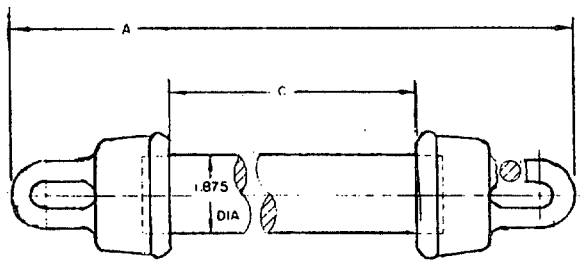

TABLE I. TYPE DESIGNATION AND DIMENSIONS.

TYPE DESIGNATOR	DIMENSIONS	
	A	C
NL422B71-167	22.500	15.000
NL422W71-207	27.500	20.000

INSULATORS, STRAIN (STYLE 73)

MIL-I-23264/22

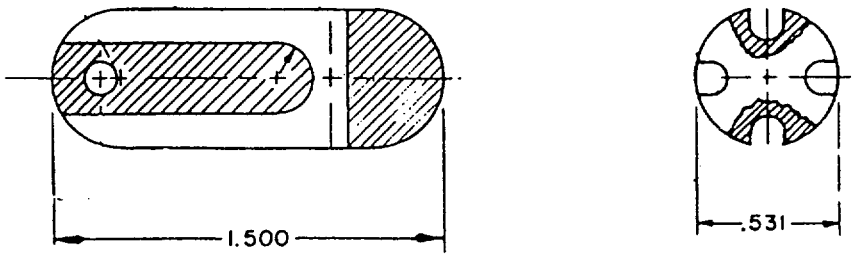

TYPE DESIGNATOR

NL422B73-012

209.3/209.4

INSULATORS, SPREADER (STYLE 76)

MIL-I-23264/23

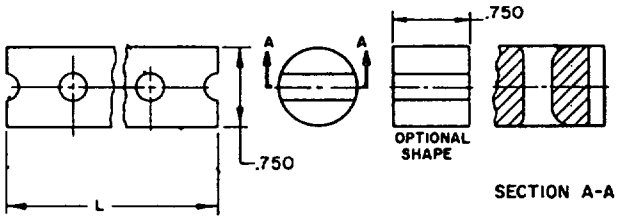

TABLE I. TYPE DESIGNATION AND DIMENSIONS.

TYPE DESIGNATOR	DIMENSION L
NL422B76-024 NL422W76-024	4.125
NL422B76-040 NL422W76-040	6.000

INSULATORS, PIN (STYLE 81)

MIL-I-23264/25

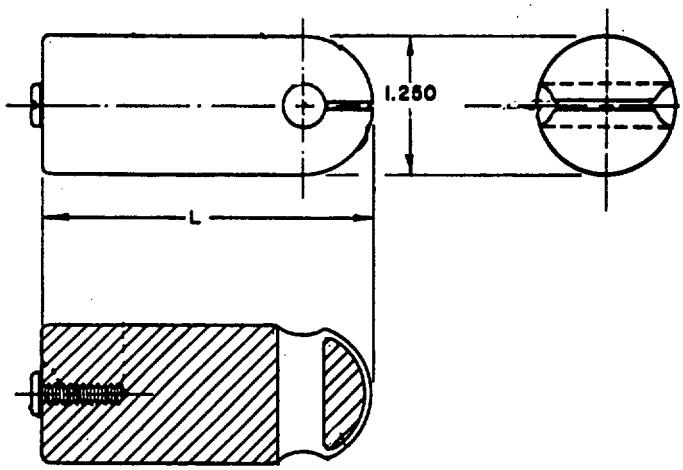

TABLE I. TYPE DESIGNATION AND DIMENSIONS.

TYPE DESIGNATOR	DIMENSION L
NL422B81-012 NL422W81-012	1.500
NL422B81-024 NL422W81-024	3.000

RIVETS, BLIND, STRUCTURAL, LOCKED AND FRICTION RETAINED SPINDLE

MIL-R-7885

SCOPE: THIS SECTION ESTABLISHES THE REQUIREMENTS FOR MECHANICALLY LOCKED SPINDLE AND FRICTION LOCKED SPINDLE BLIND RIVETS WHICH CAN BE INSTALLED WHERE ACCESS TO ONE SIDE OF THE JOINT IS NOT ADEQUATE FOR INSTALLATION OF SOLID FASTENERS. THESE RIVETS ARE INTENDED FOR STRUCTURAL ATTACHMENTS.

PART NUMBER EXAMPLE: M7885/6-4-02

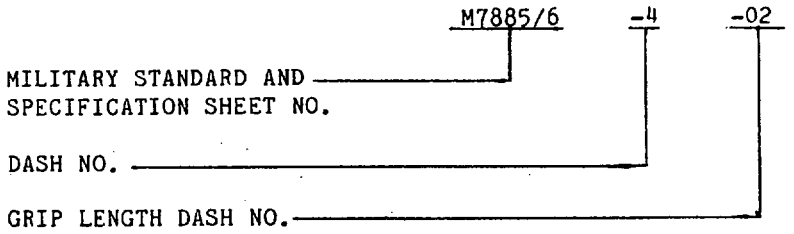

PART NUMBER EXAMPLE FOR MS SHEET): MS20600 AD5W5

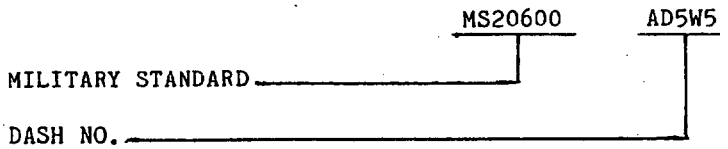

43

RIVETS, BLIND, STRUCTURAL, UNIVERSAL PROTRUDING HEAD, 5056 A1 ALLOY SLEEVE, POSITIVE LOCKED 8740 ALLOY STEEL SPINDLE, OVERSIZE DIAMETER (TYPE I, STYLE B, CLASS 1)

MIL-R-7885/6

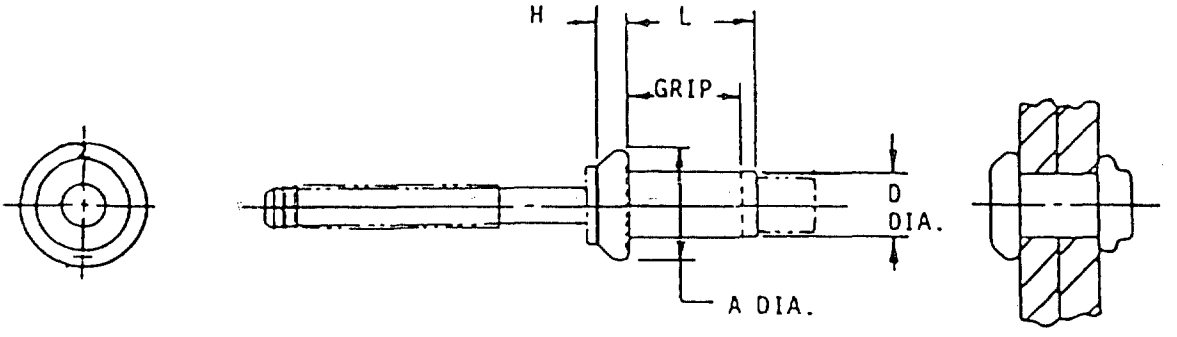

TABLE I. CHARACTERISTICS AND DIMENSIONS

PART NO. M7885/6-	BASIC BODY DIA	DIMENSIONS (MAX) A DIA	D DIA	H	INSTALLATION HOLE LIMITS
4	.125	.260	.143	.064	.146
5	.156	.322	.176	.077	.180
6	.187	.385	.204	.090	.209

TABLE II. GRIP SIZES AND DIMENSIONS

GRIP LIMITS MAX	PART NUMBER M7885/6-4- GRIP LENGTH DASH NO.	L	M7885/6-5- GRIP LENGTH DASH NO.	L	M7885/6-6- GRIP LENGTH DASH NO.	L
.062	01	.175	01	.203	01	.242
.125	02	.238	02	.246	02	.265
.187	03	.301	03	.309	03	.328
.250	04	.363	04	.371	04	.390
.312	05	.426	05	.434	05	.453
.375	06	.488	06	.496	06	.515
.437	07	.551	07	.559	07	.578
.500	08	.613	08	.621	08	.640
.562	09	.676	09	.684	09	.703
.625			10	.746	10	.765
.687			11	.809	11	.828
.750					12	.890

RIVETS, BLIND, STRUCTURAL, 100 FLUSH HEAD, 5056 A1 ALLOY SLEEVE, POSITIVE LOCKED, 8740 ALLOY STEEL SPINDLE, OVERSIZE DIAMETER (TYPE I, STYLE B, CLASS 2)

MIL-R-7885/7

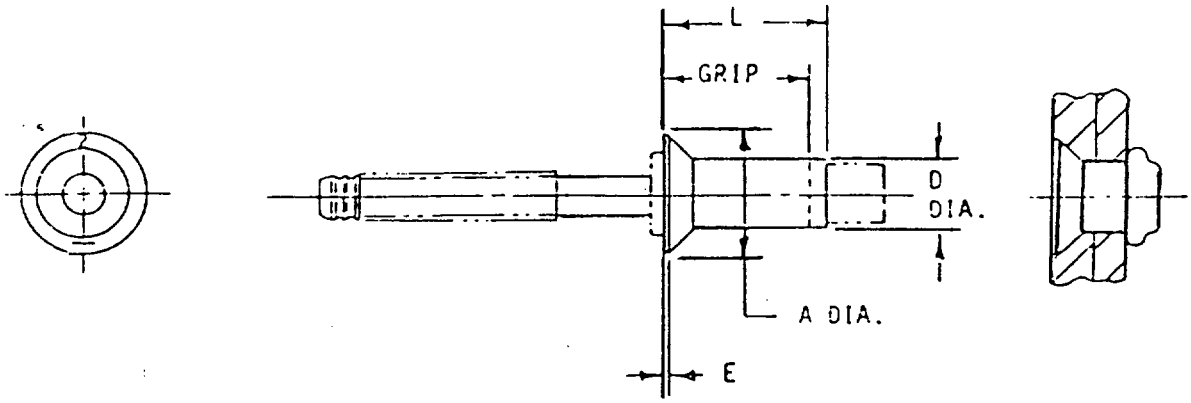

45

RIVETS, BLIND, STRUCTURAL, 100 FLUSH HEAD, 5056 A1 ALLOY SLEEVE, POSITIVE LOCKED, 8740 ALLOY STEEL SPINDLE, OVERSIZE DIAMETER (TYPE I, STYLE B, CLASS 2)

MIL-R-7885/7

TABLE I. CHARACTERISTICS AND DIMENSIONS

PART NO. M7885/7-	BASIC BODY DIA	DIMENSIONS (MAX)			INSTALLATION HOLE LIMITS
		A DIA	D DIA	E	
4	.125	.229	.143	.006	.146
5	.156	.290	.176	.006	.180
6	.187	.357	.204	.006	.209

TABLE II. GRIP SIZES AND DIMENSIONS

GRIP LIMITS MAX	PART NUMBER					
	M7885/7-4-		M7885/7-5-		M7885/7-6-	
	GRIP LENGTH DASH NO.	L	GRIP LENGTH DASH NO.	L	GRIP LENGTH DASH NO.	L
.125	02	.238	02	.266	02	.265
.187	03	.301	03	.309	03	.328
.250	04	.363	04	.371	04	.390
.312	05	.426	05	.434	05	.453
.375	06	.488	06	.496	06	.515
.437	07	.551	07	.559	07	.578
.500	08	.613	08	.621	08	.640
.562	09	.676	09	.684	09	.703
.625			10	.746	10	.765
.687			11	.809	11	.828
.750					12	.890

RIVET, BLIND, STRUCTURAL PULL STEM, SELF-PLUGGING, PROTRUDING HEAD, TYPE I

MS20600

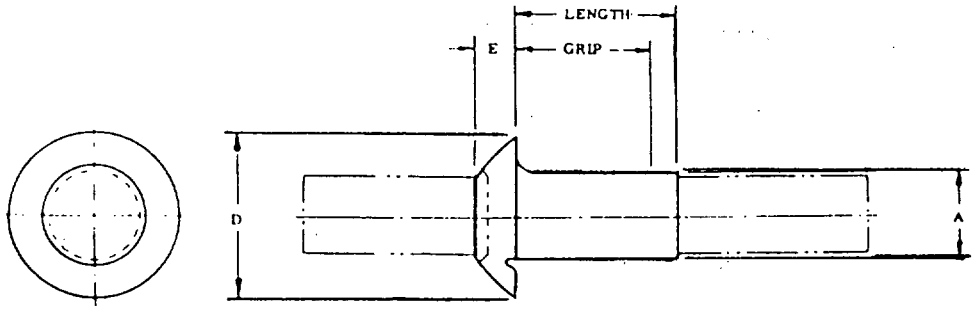

W SERRATED STEM

TABLE I. DIMENSIONS

RIVET SIZE NOM DIA	DIMENSIONS		
	A DIA	D DIA	E
1/8	.125	.250	.054
5/32	.156	.312	.067
3/16	.187	.375	.080
1/4	.250	.500	.107

RIVET, BLIND, STRUCTURAL PULL STEM, SELF-PLUGGING, PROTRUDING HEAD, TYPE I

MS20600

TABLE II. W-SERRATED STEM

1/8 RIVET DIAMETER, NOMINAL					
2117 AL PART NO. MS20600-	5056 AL PART NO. MS20600-	MONEL PART NO. MS20600-	MONEL, CADMIUM PLATED PART NO. MS20600-	GRIP RANGE MAX	LENGTH MAX
AD4W1	B4W1	M4W1	MP4W1	.062	.170
AD4W2	B4W2	M4W2	MP4W2	.125	.232
AD4W3	B4W3	M4W3	MP4W3	.187	.295
AD4W4	B4W4	M4W4	MP4W4	.250	.357
AD4W5	B4W5	M4W5	MP4W5	.312	.420
AD4W6	B4W6	M4W6	MP4W6	.375	.482

5/32 RIVET DIAMETER, NOMINAL					
2117 AL PART NO. MS20600-	5056 AL PART NO. MS20600-	MONEL PART NO. MS20600-	MONEL, CADMIUM PLATED PART NO. MS20600-	GRIP RANGE MAX	LENGTH MAX
AD5W1	B5W1	M5W1	MP5W1	.062	.192
AD5W2	B5W2	M5W2	MP5W2	.125	.254
AD5W3	B5W3	M5W3	MP5W3	.187	.317
AD5W4	B5W4	M5W4	MP5W4	.250	.379
AD5W5	B5W5	M5W5	MP5W5	.312	.441
AD5W6	B5W6	M5W6	MP5W6	.375	.503
AD5W7	B5W7	M5W7	MP5W7	.437	.567
AD5W8	B5W8	M5W8	MP5W8	.500	.629

3/16 RIVET DIAMETER, NOMINAL					
2117 AL PART NO. MS20600-	5056 AL PART NO. MS20600-	MONEL PART NO. MS20600-	MONEL, CADMIUM PLATED PART NO. MS20600-	GRIP RANGE MAX	LENGTH MAX
AD6W1	B6W1	M6W1	MP6W1	.062	.215
AD6W2	B6W2	M6W2	MP6W2	.125	.277
AD6W3	B6W3	M6W3	MP6W3	.187	.340
AD6W4	B6W4	M6W4	MP6W4	.250	.402
AD6W5	B6W5	M6W5	MP6W5	.312	.465
AD6W6	B6W6	M6W6	MP6W6	.375	.527
AD6W7	B6W7	M6W7	MP6W7	.437	.590
AD6W8	B6W8	M6W8	MP6W8	.500	.652
AD6W9	B6W9	M6W9	MP6W9	.562	.715
AD6W10	B6W10	M6W10	MP6W10	.625	.777
AD6W11	B6W11	M6W11	MP6W11	.687	.840
AD6W12	B6W12	M6W12	MP6W12	.750	.902

RIVET, BLIND, STRUCTURAL PULL STEM, SELF-PLUGGING, PROTRUDING HEAD, TYPE I

MS20600

TABLE II. W-SERRATED STEM (CONT.)

1/4 RIVET DIAMETER, NOMINAL					
2117 AL PART NO. MS20600-	5056 AL PART NO. MS20600-	MONEL PART NO. MS20600-	MONEL, CADMIUM PLATED PART NO. MS20600-	GRIP RANGE MAX	LENGTH MAX
AD8W3	B8W3	M8W3	MP8W3	.187	.385
AD8W4	B8W4	M8W4	MP8W4	.250	.447
AD8W5	B8W5	M8W5	MP8W5	.312	.510
AD8W6	B8W6	M8W6	MP8W6	.375	.572
AD8W7	B8W7	M8W7	MP8W7	.437	.635
AD8W8	B8W8	M8W8	MP8W8	.500	.697
AD8W9	B8W9	M8W9	MP8W9	.562	.760
AD8W10	B8W10	M8W10	MP8W10	.625	.822
AD8W11	B8W11	M8W11	MP8W11	.687	.885
AD8W12	B8W12	M8W12	MP8W12	.750	.947
AD8W13	B8W13	M8W13	MP8W13	.812	1.010
AD8W14	B8W14	M8W14	MP8W14	.875	1.072

RIVET, BLIND, STRUCTURAL PULL STEM, SELF-PLUGGING, 100 FLUSH HEAD, TYPE II

MS20601

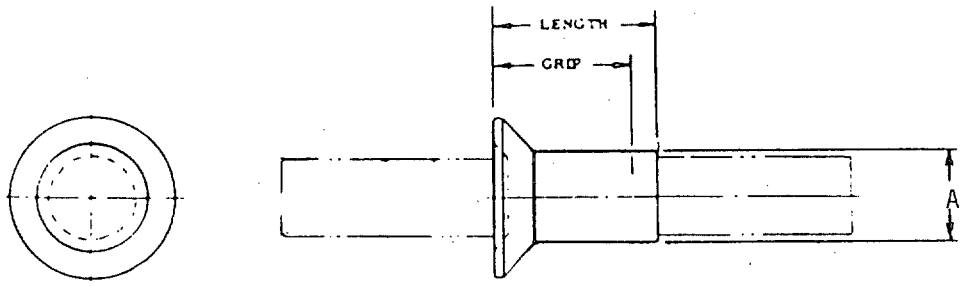

W SERRATED STEM

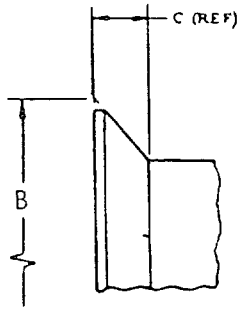

ENLARGED VIEW OF HEAD

TABLE I. DIMENSIONS

RIVET SIZE NOM DIA	DIMENSIONS		
	A DIA	B DIA	C
1/8	.125	.225	.042
5/32	.156	.286	.055
3/16	.187	.353	.070
1/4	.250	.476	.095

RIVET, BLIND, STRUCTURAL PULL STEM, SELF-PLUGGING, 100 FLUSH HEAD, TYPE II

MS20601

TABLE II. W-SERRATED STEM

1/8 RIVET DIAMETER, NOMINAL					
2117 AL PART NO. MS20600-	5056 AL PART NO. MS20600-	MONEL PART NO. MS20600-	MONEL, CADMIUM PLATED PART NO. MS20600-	GRIP RANGE MAX	LENGTH MAX
AD4W1	B4W1	M4W1	MP4W1	.062	.170
AD4W2	B4W2	M4W2	MP4W2	.125	.232
AD4W3	B4W3	M4W3	MP4W3	.187	.295
AD4W4	B4W4	M4W4	MP4W4	.250	.357
AD4W5	B4W5	M4W5	MP4W5	.312	.420
AD4W6	B4W6	M4W6	MP4W6	.375	.482

5/32 RIVET DIAMETER, NOMINAL					
2117 AL PART NO. MS20600-	5056 AL PART NO. MS20600-	MONEL PART NO. MS20600-	MONEL, CADMIUM PLATED PART NO. MS20600-	GRIP RANGE MAX	LENGTH MAX
AD5W2	B5W2	M5W2	MP5W2	.125	.254
AD5W3	B5W3	M5W3	MP5W3	.187	.317
AD5W4	B5W4	M5W4	MP5W4	.250	.379
AD5W5	B5W5	M5W5	MP5W5	.312	.441
AD5W6	B5W6	M5W6	MP5W6	.375	.503
AD5W7	B5W7	M5W7	MP5W7	.437	.567
AD5W8	B5W8	M5W8	MP5W8	.500	.629

3/16 RIVET DIAMETER, NOMINAL					
2117 AL PART NO. MS20600-	5056 AL PART NO. MS20600-	MONEL PART NO. MS20600-	MONEL, CADMIUM PLATED PART NO. MS20600-	GRIP RANGE MAX	LENGTH MAX
AD6W2	B6W2	M6W2	MP6W2	.125	.277
AD6W3	B6W3	M6W3	MP6W3	.187	.340
AD6W4	B6W4	M6W4	MP6W4	.250	.402
AD6W5	B6W5	M6W5	MP6W5	.312	.465
AD6W6	B6W6	M6W6	MP6W6	.375	.527
AD6W7	B6W7	M6W7	MP6W7	.437	.590
AD6W8	B6W8	M6W8	MP6W8	.500	.652
AD6W9	B6W9	M6W9	MP6W9	.562	.715
AD6W10	B6W10	M6W10	MP6W10	.625	.777
AD6W11	B6W11	M6W11	MP6W11	.687	.840
AD6W12	B6W12	M6W12	MP6W12	.750	.902

51

RIVET, BLIND, STRUCTURAL PULL STEM, SELF-PLUGGING, 100 FLUSH HEAD, TYPE II

MS20601

TABLE II. W-SERRATED STEM (CONT.)

1/4 RIVET DIAMETER, NOMINAL					
2117 AL PART NO. MS20600-	5056 AL PART NO. MS20600-	MONEL PART NO. MS20600-	MONEL, CADMIUM PLATED PART NO. MS20600-	GRIP RANGE MAX	LENGTH MAX
AD8W3	B8W3	M8W3	MP8W3	.187	.385
AD8W4	B8W4	M8W4	MP8W4	.250	.447
AD8W5	B8W5	M8W5	MP8W5	.312	.510
AD8W6	B8W6	M8W6	MP8W6	.375	.572
AD8W7	B8W7	M8W7	MP8W7	.437	.635
AD8W8	B8W8	M8W8	MP8W8	.500	.697
AD8W9	B8W9	M8W9	MP8W9	.562	.760
AD8W10	B8W10	M8W10	MP8W10	.625	.822
AD8W11	B8W11	M8W11	MP8W11	.687	.885
AD8W12	B8W12	M8W12	MP8W12	.750	.947
AD8W13	B8W13	M8W13	MP8W13	.812	1.010
AD8W14	B8W14	M8W14	MP8W14	.875	1.072

RIVET, BLIND, NONSTRUCTURAL, UNIVERSAL-HEAD, CLASS I

MS20604

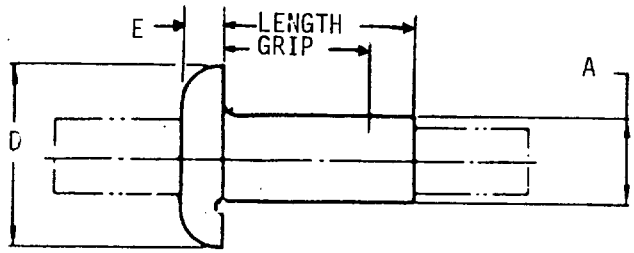

TYPE T
PLAIN STEM

TYPE W
SERRATED
STEM

TABLE I. DIMENSIONS

A DIA	D DIA	E
.094	.187	.040
.125	.250	.054
.156	.312	.067
.187	.375	.080
.250	.500	.107

RIVET, BLIND, NONSTRUCTURAL, UNIVERSAL-HEAD, CLASS I

MS20604

TABLE II. NICKEL-COPPER ALLOY (MONEL)

.094 DIAMETER, NOMINAL				
MANDREL LOADED PART NO. MS20604-	PLAIN STEM PART NO. MS20604-	SERRATED STEM PART NO. MS20604-	GRIP RANGE MAX	LENGTH MAX
M3C1	M3T1	M3W1	.062	.140
M3C2	M3T2	M3W2	.125	.203
M3C3	M3T3	M3W3	.187	.265
M3C4	M3T4	M3W4	.250	.328

.125 DIAMETER, NOMINAL				
MANDREL LOADED PART NO. MS20604-	PLAIN STEM PART NO. MS20604-	SERRATED STEM PART NO. MS20604-	GRIP RANGE MAX	LENGTH MAX
M4C1	M4T1	M4W1	.062	.170
M4C2	M4T2	M4W2	.125	.232
M4C3	M4T3	M4W3	.187	.295
M4C4	M4T4	M4W4	.250	.357
M4C5	M4T5	M4W5	.312	.420
M4C6	M4T6	M4W6	.375	.482
M4C7	M4T7	M4W7	.437	.544
M4C8	M4T8	M4W8	.500	.607

.156 DIAMETER, NOMINAL				
MANDREL LOADED PART NO. MS20604-	PLAIN STEM PART NO. MS20604-	SERRATED STEM PART NO. MS20604-	GRIP RANGE MAX	LENGTH MAX
M5C2	M5T2	M5W2	.125	.274
M5C4	M5T4	M5W4	.250	.399
M5C6	M5T6	M5W6	.375	.524
M5C8	M5T8	M5W8	.500	.679

RIVET, BLIND, NONSTRUCTURAL, UNIVERSAL-HEAD, CLASS I

MS20604

TABLE II. NICKEL-COPPER ALLOY (MONEL) (CONT.)

.187 DIAMETER, NOMINAL				
MANDREL LOADED PART NO. MS20604-	PLAIN STEM PART NO. MS20604-	SERRATED STEM PART NO. MS20604-	GRIP RANGE MAX	LENGTH MAX
M6C2	M6T2	M6W2	.125	.301
M6C4	M6T4	M6W4	.250	.426
M6C6	M6T6	M6W6	.375	.551
M6C8	M6T8	M6W8	.500	.706
M6C10	M6T10	M6W10	.625	.801
M6C12	M6T12	M6W12	.750	.926
M6C14	M6T14	M6W14	.875	1.051

.250 DIAMETER, NOMINAL				
MANDREL LOADED PART NO. MS20604-	PLAIN STEM PART NO. MS20604-	SERRATED STEM PART NO. MS20604-	GRIP RANGE MAX	LENGTH MAX
M8C2	M8T2	M8W2	.125	.342
M8C4	M8T4	M8W4	.250	.447
M8C6	M8T6	M8W6	.375	.572
M8C8	M8T8	M8W8	.500	.697
M8C10	M8T10	M8W10	.625	.822
M8C12	M8T12	M8W12	.750	.947
M8C14	M8T14	M8W14	.875	1.072
M8C16	M8T16	M8W16	1.000	1.195

55

RIVET, BLIND, NONSTRUCTURAL, UNIVERSAL-HEAD, CLASS I

MS20604

TABLE III. ALUMINUM ALLOY 5056

.094 DIAMETER, NOMINAL			
PLAIN STEM PART NO. MS20604-	SERRATED STEM PART NO. MS20604-	GRIP RANGE MAX	LENGTH MAX
B3T1	B3W1	.062	.140
B3T2	B3W2	.125	.203
B3T3	B3W3	.187	.265
B3T4	B3W4	.250	.328

.125 DIAMETER, NOMINAL			
PLAIN STEM PART NO. MS20604-	SERRATED STEM PART NO. MS20604-	GRIP RANGE MAX	LENGTH MAX
B4T1	B4W1	.062	.170
B4T2	B4W2	.125	.232
B4T3	B4W3	.187	.295
B4T4	B4W4	.250	.357
B4T5	B4W5	.312	.420
B4T6	B4W6	.375	.482
B4T7	B4W7	.437	.544
B4T8	B4W8	.500	.607

.156 DIAMETER, NOMINAL			
PLAIN STEM PART NO. MS20604-	SERRATED STEM PART NO. MS20604-	GRIP RANGE MAX	LENGTH MAX
B5T2	B5W2	.125	.274
B5T4	B5W4	.250	.399
B5T6	B5W6	.375	.524
B5T8	B5W8	.500	.679

RIVET, BLIND, NONSTRUCTURAL, UNIVERSAL-HEAD, CLASS I

MS20604

TABLE III. ALUMINUM ALLOY 5056 (CONT.)

.187 DIAMETER, NOMINAL			
PLAIN STEM PART NO. MS20604-	SERRATED STEM PART NO. MS20604-	GRIP RANGE MAX	LENGTH MAX
B6T2	B6W2	.125	.301
B6T4	B6W4	.250	.426
B6T6	B6W6	.375	.551
B6T8	B6W8	.500	.706
B6T10	B6W10	.625	.801
B6T12	B6W12	.750	.926
B6T14	B6W14	.875	1.051

.250 DIAMETER, NOMINAL			
PLAIN STEM PART NO. MS20604-	SERRATED STEM PART NO. MS20604-	GRIP RANGE MAX	LENGTH MAX
B8T2	B8W2	.125	.342
B8T4	B8W4	.250	.447
B8T6	B8W6	.375	.572
B8T8	B8W8	.500	.697
B8T10	B8W10	.625	.822
B8T12	B8W12	.750	.947
B8T14	B8W14	.875	1.072
B8T16	B8W16	1.000	1.195

57

RIVET, BLIND, NONSTRUCTURAL, UNIVERSAL-HEAD, CLASS I

MS20604

TABLE IV. ALUMINUM ALLOY 2117

.094 DIAMETER, NOMINAL				
MANDREL LOADED PART NO. MS20604-	PLAIN STEM PART NO. MS20604-	SERRATED STEM PART NO. MS20604-	GRIP RANGE MAX	LENGTH MAX
AD3C1	AD3T1	AD3W1	.062	.140
AD3C2	AD3T2	AD3W2	.125	.203
AD3C3	AD3T3	AD3W3	.187	.265
AD3C4	AD3T4	AD3W4	.250	.328

.125 DIAMETER, NOMINAL				
MANDREL LOADED PART NO. MS20604-	PLAIN STEM PART NO. MS20604-	SERRATED STEM PART NO. MS20604-	GRIP RANGE MAX	LENGTH MAX
AD4C1	AD4T1	AD4W1	.062	.170
AD4C2	AD4T2	AD4W2	.125	.232
AD4C3	AD4T3	AD4W3	.187	.295
AD4C4	AD4T4	AD4W4	.250	.357
AD4C5	AD4T5	AD4W5	.312	.420
AD4C6	AD4T6	AD4W6	.375	.482
AD4C7	AD4T7	AD4W7	.437	.544
AD4C8	AD4T8	AD4W8	.500	.607

.156 DIAMETER, NOMINAL				
MANDREL LOADED PART NO. MS20604-	PLAIN STEM PART NO. MS20604-	SERRATED STEM PART NO. MS20604-	GRIP RANGE MAX	LENGTH MAX
AD5C2	AD5T2	AD5W2	.125	.274
AD5C4	AD5T4	AD5W4	.250	.399
AD5C6	AD5T6	AD5W6	.375	.524
AD5C8	AD5T8	AD5W8	.500	.679

RIVET, BLIND, NONSTRUCTURAL, UNIVERSAL-HEAD, CLASS I

MS20604

TABLE IV. ALUMINUM ALLOY 2117 (CONT.)

.187 DIAMETER, NOMINAL				
MANDREL LOADED PART NO. MS20604-	PLAIN STEM PART NO. MS20604-	SERRATED STEM PART NO. MS20604-	GRIP RANGE MAX	LENGTH MAX
AD6C2	AD6T2	AD6W2	.125	.301
AD6C4	AD6T4	AD6W4	.250	.426
AD6C6	AD6T6	AD6W6	.375	.551
AD6C8	AD6T8	AD6W8	.500	.706
AD6C10	AD6T10	AD6W10	.625	.801
AD6C12	AD6T12	AD6W12	.750	.926
AD6C14	AD6T14	AD6W14	.875	1.051

.250 DIAMETER, NOMINAL				
MANDREL LOADED PART NO. MS20604-	PLAIN STEM PART NO. MS20604-	SERRATED STEM PART NO. MS20604-	GRIP RANGE MAX	LENGTH MAX
AD8C2	AD8T2	AD8W2	.125	.342
AD8C4	AD8T4	AD8W4	.250	.447
AD8C6	AD8T6	AD8W6	.375	.572
AD8C8	AD8T8	AD8W8	.500	.697
AD8C10	AD8T10	AD8W10	.625	.822
AD8C12	AD8T12	AD8W12	.750	.947
AD8C14	AD8T14	AD8W14	.875	1.072
AD8C16	AD8T16	AD8W16	1.000	1.195

NUT, SELF-LOCKING, 250°F, 450°F, AND 800°F, 125, 60, AND 30 KSI FTU

MIL-N-25027

SCOPE: THIS SECTION COVERS SELF-LOCKING NUTS AND SELF-LOCKING PLATE NUTS FOR USE WHERE TEMPERATURES WILL NOT EXCEED 250°F, 450°F AND 800°F AND WILL DEVELOP THE ULTIMATE TENSILE STRENGTH OF 125, 60 AND 30 KSI FTU BOLTS.

PART NUMBER EXAMPLE: MS21070L04K

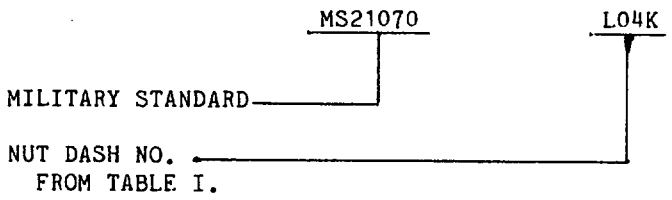

61

NUT, SELF-LOCKING, HEX, REGULAR HEIGHT, (NON-METALLIC INSERT), 250°F, NICKEL-COPPER ALLOY

MS17828

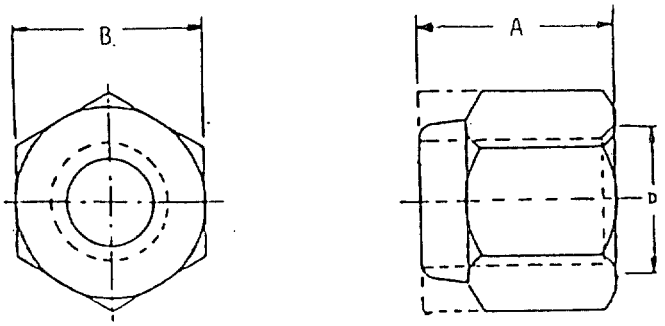

TABLE I. DIMENSIONS AND CHARACTERISTICS

PART NO. MS17828-	THREAD @ UN -3B SIZE	DIMENSIONS A MAX	B MAX	D	AXIAL STRENGTH LBS-MIN
04C	4-40	.157	.252	.136	520
06C	6-32	.188	.316	.161	780
08C	8-32	.281	.347	.188	1250
3C	10-24	.281	.378	.210	1460
3F	10-32	.281	.378	.210	1790
4C	1/4-20	.360	.439	.273	3900
4F	1/4-28	.360	.439	.273	4000
5C	5/16-18	.360	.504	.336	6000
5F	5/16-24	.360	.504	.336	6400
6C	3/8-16	.469	.566	.398	9600
6F	3/8-24	.469	.566	.398	10750
7C	7/16-14	.469	.692	.467	12000
7F	7/16-20	.469	.692	.467	13070
8C	1/2-13	.610	.755	.531	19100
8F	1/2-20	.610	.755	.531	19600
9C	9/16-12	.704	.880	.594	22200
9F	9/16-18	.704	.880	.594	25000
10C	5/8-11	.766	.944	.656	28900
10F	5/8-18	.766	.944	.656	30300
12C	3/4-10	.891	1.068	.782	38700
12F	3/4-16	.891	1.068	.782	39300
14C	7/8-9	1.016	1.257	.918	56700
14F	7/8-14	1.016	1.257	.918	61300
16C	1-8	1.141	1.446	1.044	66700
16F	1-12	1.141	1.446	1.044	71500
18C	1 1/8-7	1.266	1.634	1.171	81900
18F	1 1/8-12	1.266	1.634	1.171	90400
20C	1 1/4-7	1.454	1.822	1.295	115700
20F	1 1/4-12	1.454	1.822	1.295	119800
22C	1 3/8-6	1.609	2.011	1.447	110300
22F	1 3/8-12	1.609	2.011	1.447	115200
24C	1 1/2-6	1.640	2.200	1.568	134000
24F	1 1/2-12	1.640	2.200	1.568	139000
28C	1 3/4-5	2.376	2.766	1.818	205000
32C	2-4 1/2	2.469	3.142	2.065	233000
36C	2 1/4-4 1/2	2.876	3.518	2.328	390000
40C	2 1/2-4	3.204	4.020	2.578	500000

@ PART NO. WITH "C" AFTER DASH NO. MEANS UNC. PART NO. WITH "F" AFTER DASH NO. MEANS UNF.

NUT, SELF-LOCKING, HEXAGON, REGULAR-HEIGHT, (NON-METALLIC INSERT), NON-CRS, 250°F

MS17829

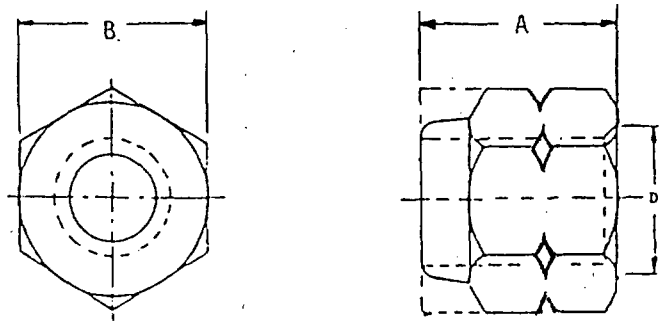

TABLE I. DIMENSIONS AND CHARACTERISTICS

PART NO. MS17829-	THREAD @ UN -3B SIZE	DIMENSIONS A MAX	B MAX	D	AXIAL STRENGTH LBS-MIN
3C	10-24	.281	.376	.210	2010
4C	1/4-20	.360	.439	.273	4770
4F	1/4-28	.360	.439	.273	5460
5C	5/16-18	.360	.502	.336	7860
5F	5/16-24	.360	.502	.336	8700
6C	3/8-16	.469	.564	.398	11620
6F	3/8-24	.469	.564	.398	13170
7C	7/16-14	.469	.690	.467	15940
7F	7/16-20	.469	.690	.467	17800
8C	1/2-13	.610	.752	.531	21300
8F	1/2-20	.610	.752	.531	24000
9C	9/16-12	.704	.877	.594	27300
9F	9/16-18	.704	.877	.594	30400
10C	5/8-11	.766	.940	.656	33900
10F	5/8-18	.766	.940	.656	38400
12C	3/4-10	.891	1.064	.782	50100
12F	3/4-16	.891	1.064	.782	56000
14C	7/8-9	1.016	1.252	.918	69300
14F	7/8-14	1.016	1.252	.918	76400
16C	1-8	1.141	1.440	1.044	90900
16F	1-12	1.141	1.440	1.044	99400
18C	1 1/8-7	1.266	1.627	1.171	114000
18F	1 1/8-12	1.266	1.627	1.171	128400
20C	1 1/4-7	1.454	1.814	1.295	145000
20F	1 1/4-12	1.454	1.814	1.295	161000
22C	1 3/8-6	1.609	2.008	1.447	173000
22F	1 3/8-12	1.609	2.008	1.447	197000
24C	1 1/2-6	1.640	2.197	1.568	211000
24F	1 1/2-12	1.640	2.197	1.568	237200
28C	1 3/4-5	2.376	2.762	1.818	285000
32C	2-4 1/2	2.469	3.137	2.065	375000
36C	2 1/4-4 1/2	2.876	3.514	2.328	487500
40C	2 1/2-4	3.204	4.015	2.578	600000

@ PART NO. WITH "C" AFTER DASH NO. MEANS UNC. PART NO. WITH "F" AFTER DASH NO. MEANS UNF.

NUT, SELF-LOCKING, HEXAGON, REGULAR-HEIGHT, (NON-METALLIC INSERT), 250°F, CRS

MS17830

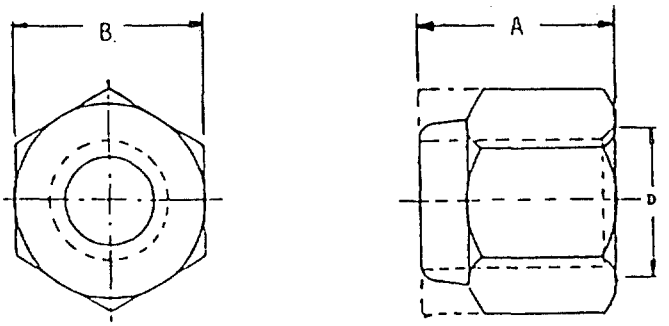

TABLE I. DIMENSIONS AND CHARACTERISTICS

PART NO. MS17830-	THREAD @ __UN_-3B SIZE	DIMENSIONS A MAX	B MAX	D	AXIAL STRENGTH LBS-MIN
04C	4-40	.157	.251	.136	300
06C	6-32	.188	.313	.161	460
08C	8-32	.281	.345	.188	730
3C	10-24	.281	.376	.210	890
4C	1/4-20	.360	.439	.273	1750
5C	5/16-18	.360	.502	.336	2880
6C	3/8-16	.469	.564	.398	4260
7C	7/16-14	.469	.690	.467	5850
8C	1/2-13	.610	.752	.531	7800
9C	9/16-12	.704	.877	.594	10010
10C	5/8-11	.766	.940	.656	12400
12C	3/4-10	.891	1.064	.782	18400
14C	7/8-9	1.016	1.252	.918	25400
16C	1-8	1.141	1.440	1.044	33300
18C	1 1/8-7	1.266	1.627	1.171	42000
20C	1 1/4-7	1.454	1.814	1.295	53300
22C	1 3/8-6	1.609	2.008	1.447	63500
22F	1 3/8-12	1.609	2.008	1.447	72300
24C	1 1/2-6	1.640	2.197	1.568	77300
24F	1 1/2-12	1.640	2.197	1.568	87000
28C	1 3/4-5	2.376	2.762	1.818	104500
32C	2-4 1/2	2.469	3.137	2.065	137500
36C	2 1/4-4 1/2	2.876	3.514	2.328	178800
40C	2 1/2-4	3.204	4.015	2.578	220000

@ PART NO. WITH "C" AFTER DASH NO. MEANS UNC. PART NO. WITH "F" AFTER DASH NO. MEANS UNF.

NUT, SELF-LOCKING, REDUCED HEXAGON, REDUCED HEIGHT, 450°F, RING BASE, NON-CRS

MS21042

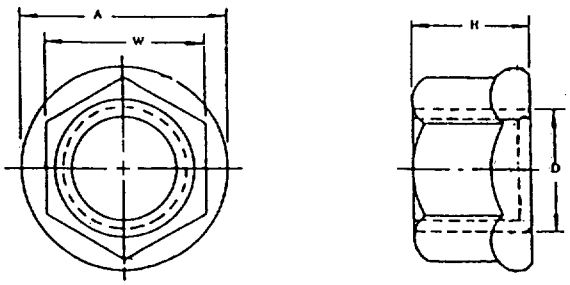

TABLE I. DIMENSIONS AND CHARACTERISTICS

PART NO. MS21042-	THREAD @ __UNJ_-3B SIZE	DIMENSIONS (MAX)				AXIAL STRENGTH LBS-MIN
		A DIA	D DIA	H	W	
02	.086-56	.167	.106	.100	.127	660
04	.1120-40	.206	.142	.125	.158	1110
06	.1380-32	.244	.168	.141	.190	1670
08	.1640-32	.290	.194	.188	.221	2490
3	.1900-32	.330	.220	.188	.252	3470
4	.2500-28	.420	.280	.219	.316	6200
5	.3125-24	.520	.342	.268	.378	9820
6	.3750-24	.620	.405	.282	.440	15200

@ PART NO. WITH "0" IN DASH NO. MEANS UNJC (02, 04, 06, 08), OTHERS MEAN UNJF.

NUT, SELF-LOCKING, REDUCED HEXAGON, REDUCED HEIGHT, 800°F, RING BASE, CRS

MS21043

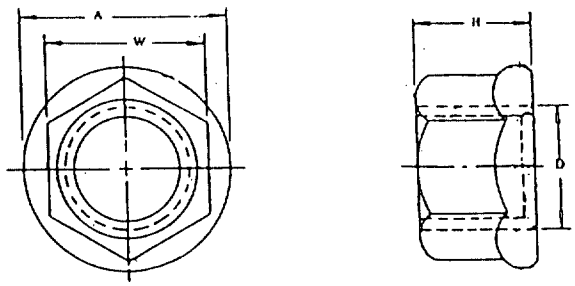

TABLE I. DIMENSIONS AND CHARACTERISTICS

PART NO. MS21043-	THREAD @ __UNJ_-3B SIZE	DIMENSIONS (MAX)				AXIAL STRENGTH LBS-MIN
		A	D	H	W	
04	4-40	.206	.142	.125	.158	755
06	6-32	.244	.168	.141	.190	1136
08	8-32	.290	.194	.188	.221	1720
3	10-32	.330	.220	.188	.252	2460
4	1/4-28	.420	.280	.219	.316	4580
5	5/16-24	.520	.342	.266	.378	7390
6	3/8-24	.620	.405	.282	.440	11450

@ PART NO. WITH "0" IN DASH NO. MEANS UNJC (04, 06, 08), OTHERS MEAN UNJF.

NUT, SELF-LOCKING, HEXAGON, REGULAR HEIGHT, NON-METALLIC INSERT, 250°F, 125 AND 60 KSI Ftu

MS21044

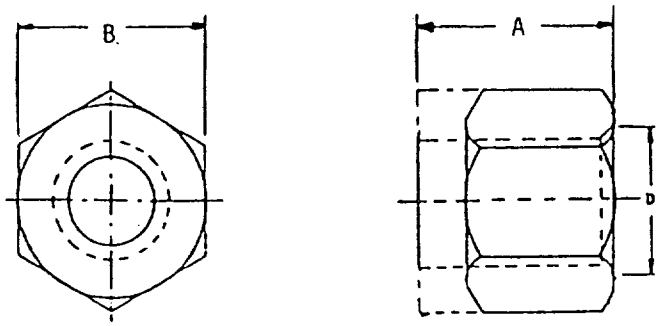

TABLE I. DIMENSIONS AND CHARACTERISTICS

PART NO. M21044*	THREAD @ SIZE __UNJ_-3B	DIMENSIONS A MAX	DIMENSIONS B MAX	DIMENSIONS D	AXIAL STRENGTH LBS-MIN CRES & STEEL	AXIAL STRENGTH LBS-MIN ALUM
04	.1120-40	.157	.251	.136	750	750
06	.1380-32	.188	.313	.161	1130	1130
08	.1640-32	.281	.345	.188	1720	1720
3	.1900-32	.281	.376	.210	2460	2460
4	.2500-28	.360	.439	.273	4580	4580
5	.3125-24	.360	.502	.336	7390	3670
6	.3750-24	.469	.564	.398	11450	5680
7	.4375-20	.469	.690	.467	15450	7660
8	.5000-20	.610	.752	.531	21110	10470
9	.5625-18	.704	.877	.594	26810	13300
10	.6250-18	.766	.940	.656	34130	16930
12	.7500-16	.891	1.064	.787	50020	24810
14	.8750-14	1.016	1.252	.918	68440	33950
16	1.0000-12	1.141	1.440	1.044	92180	45720
18	1.1250-12	1.266	1.627	1.171	116700	57880
20	1.2500-12	1.454	1.815	1.295	147940	73380

@ PART NO. WITH "0" IN DASH NO. MEANS UNJC (04, 06, 08), OTHERS MEAN UNJF.
* ALUM ALLOY = "D" BEFORE DASH NO DIGITS. STEEL = "N" BEFORE DASH NO DIGITS.
COPPER BASE ALLOY = "B" BEFORE DASH NO DIGITS. CRES = "C" BEFORE DASH NO DIGITS.

NUT, SELF-LOCKING, HEXAGON, REGULAR HEIGHT, 450°F, 125 KSI Ftu

MS21045

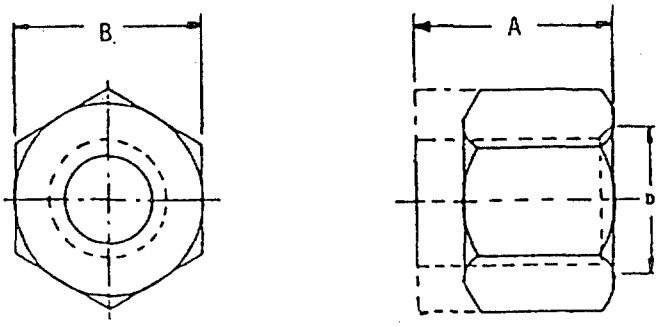

TABLE I. DIMENSIONS AND CHARACTERISTICS

PART NO. M21045* FILM LUBRICATED	THREAD @ SIZE __UNJ_-3B	DIMENSIONS A MAX	B MAX	D	AXIAL STRENGTH LBS-MIN
04	.1120-40	.157	.251	.136	750
06	.1380-32	.188	.313	.161	1130
08	.1640-32	.250	.345	.188	1720
3	.1900-32	.250	.376	.210	2460
4	.2500-28	.328	.439	.273	4580
5	.3125-24	.360	.502	.336	7390
6	.3750-24	.469	.564	.398	11450
7	.4375-20	.469	.690	.467	15450
8	.5000-20	.610	.752	.531	21110
9	.5625-18	.704	.877	.594	26810
10	.6250-18	.766	.940	.656	34130
12	.7500-16	.891	1.064	.787	50020
14	.8750-14	1.016	1.252	.918	68440
16	1.0000-12	1.141	1.440	1.044	92180
18	1.1250-12	1.266	1.627	1.171	116700
20	1.2500-12	1.454	1.814	1.295	147940

@ PART NO. WITH "0" IN DASH NO. MEANS UNJC (04, 06, 08), OTHERS MEAN UNJF.
* STEEL DRY LUB. = "L" BEFORE DASH NO DIGITS. CRES = "C" BEFORE DASH NO DIGITS.
STEEL NON-DRY LUB. HAS NO LETTER BEFORE DASH NO DIGITS.

NUT, SELF-LOCKING, HEXAGON, REGULAR HEIGHT, 800°F, 125 KSI Ftu

MS21046

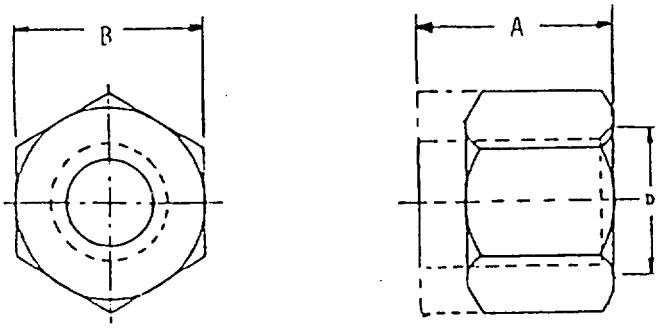

TABLE I. DIMENSIONS AND CHARACTERISTICS

PART NO. M21046	THREAD @ SIZE __UNJ_-3B	DIMENSIONS A MAX	B MAX	D	AXIAL STRENGTH LBS-MIN
C04	4-40	.157	.251	.136	750
C06	6-32	.188	.313	.161	1130
C08	8-32	.250	.345	.188	1720
C3	10-32	.250	.376	.210	2460
C4	1/4-28	.328	.439	.273	4580
C5	5/16-24	.360	.502	.336	7390
C6	3/8-24	.469	.564	.398	11450
C7	7/16-20	.469	.690	.467	15450
C8	1/2-20	.610	.752	.531	21110
C9	9/16-18	.704	.877	.594	26810
C10	5/8-18	.766	.940	.656	34130
C12	3/4-16	.891	1.064	.787	50020
C14	7/8-14	1.016	1.252	.918	68440
C16	1-12	1.141	1.440	1.044	92180
C18	1 1/8-12	1.266	1.627	1.171	116700
C20	1 1/4-12	1.454	1.815	1.295	147940

@ PART NO. WITH "0" IN DASH NO. MEANS UNJC (04, 06, 08), OTHERS MEAN UNJF.

NUT, SELF-LOCKING, PLATE, TWO LUG, LOW HEIGHT, STEEL, 450°F, 125 KSI Ftu

MS21047

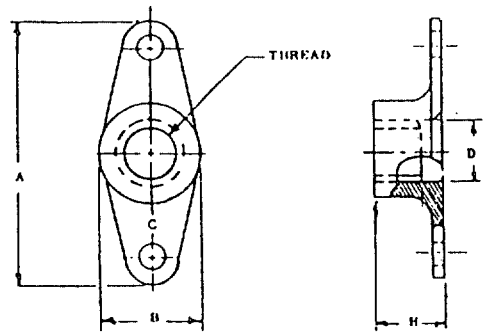

TABLE I. DIMENSIONS AND CHARACTERISTICS

PART NO. MS21047 PLAIN HOLES FILM LUBRICATED		THREAD @ SIZE __UNJ_-3B	DIMENSIONS				AXIAL STRENGTH LBS-MIN
DRY	NON-DRY		A MAX	B DIA MAX	D DIA MIN	H MAX	
L04	-04	.1120-40	.948	.260	--	.143	750
L06	-06	.1380-32	.948	.265	--	.171	1130
L08	-08	.1640-32	.948	.297	.168	.250	1720
L3	-3	.1900-32	.948	.328	.194	.250	2460
L4	-4	.2500-28	1.260	.414	.254	.281	4580
L5	-5	.3750-24	1.292	.505	.317	.328	7390
L6	-6	.4375-20	1.292	.614	.379	.344	11450

FOR COUNTERSUNK OR DIMPLED HOLES ADD "K" AFTER PART DASH NUMBER.
COUNTERSUNK OR DIMPLED HOLES NOT AVAILABLE IN -6K, -7K, L6K, OR L7K PART NO.
@ PART NO. WITH "0" IN DASH NO. MEANS UNJC (04, 06, 08), OTHERS MEAN UNJF.

NUT, SELF-LOCKING, PLATE, TWO LUG, LOW HEIGHT, CRES, 450°F AND 800°F, 125 KSI Ftu

MS21048

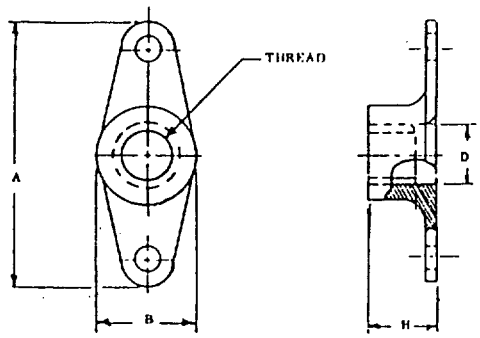

TABLE I. DIMENSIONS AND CHARACTERISTICS

PART NO. MS21048 PLAIN HOLES FILM LUBRICATED		THREAD @ SIZE UNJ -3B	DIMENSIONS				AXIAL STRENGTH LBS-MIN
450°F DRY	800°F NON-DRY		A MAX	B DIA MAX	D DIA MIN	H MAX	
L04	-04	.1120-40	.948	.260	--	.143	750
L06	-06	.1380-32	.948	.265	--	.171	1130
L08	-08	.1640-32	.948	.297	.168	.250	1720
L3	-3	.1900-32	.948	.328	.194	.250	2460
L4	-4	.2500-28	1.260	.414	.254	.281	4580
L5	-5	.3125-24	1.292	.505	.317	.328	7390
L6	-6	.3750-24	1.292	.614	.379	.344	11450

FOR COUNTERSUNK OR DIMPLED HOLES ADD "K" AFTER PART DASH NUMBER.
COUNTERSUNK OR DIMPLED HOLES NOT AVAILABLE IN L6K OR -6K.
FOR WELDING PROJECTIONS ADD "W" AFTER PART DASH NUMBER.
@ PART NO. WITH "0" IN DASH NO. MEANS UNJC (04, 06, 08), OTHERS MEAN UNJF.

71

NUT, SELF-LOCKING, PLATE, TWO LUG, LOW HEIGHT, STEEL, 450°F, 125 KSI Ftu

MS21049

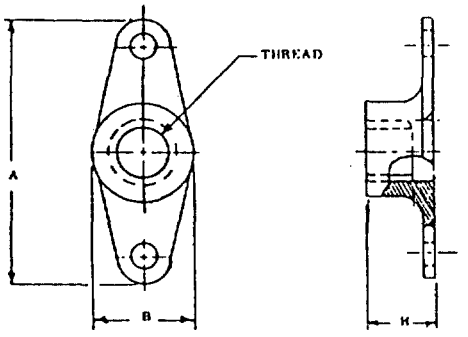

TABLE I. DIMENSIONS AND CHARACTERISTICS

PART NO. MS21049 PLAIN HOLES FILM LUBRICATED		THREAD @ SIZE __UNJ_-3B	DIMENSIONS			AXIAL STRENGTH LBS-MIN
DRY	NON-DRY		A MAX	B MAX	H MAX	
L08	-08	.1640-32	.948	.422	.272	1720
L3	-3	.1900-32	.948	.453	.281	2460
L4	-4	.2500-28	1.260	.619	.340	4580
L5	-5	.3125-24	1.292	.766	.422	7390

FOR COUNTERSUNK OR DIMPLED HOLES ADD "K" AFTER PART DASH NUMBER.
@ PART NO. WITH "0" IN DASH NO. MEANS UNJC (08), OTHERS MEAN UNJF.

NUT, SELF-LOCKING, PLATE, TWO LUG, LOW HEIGHT, CRES, 450°F AND 800°F, 125 KSI Ftu

MS21050

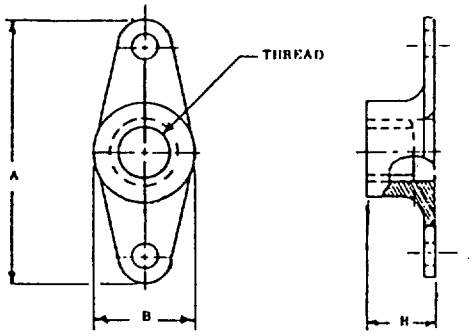

TABLE I. DIMENSIONS AND CHARACTERISTICS

PART NO. MS21050 PLAIN HOLES FILM LUBRICATED		THREAD @ SIZE	DIMENSIONS			AXIAL STRENGTH
450°F DRY	800°F NON-DRY	__UNJ_-3B	A MAX	B MAX	H MAX	LBS-MIN
L08	-08	.1640-32	.948	.422	.272	1720
L3	-3	.1900-32	.948	.453	.281	2460
L4	-4	.2500-28	1.260	.619	.340	4580
L5	-5	.3125-24	1.292	.766	.422	7390

FOR COUNTERSUNK OR DIMPLED HOLES ADD "K" AFTER PART DASH NUMBER.
FOR WELDING PROJECTIONS ADD "W" AFTER PART DASH NUMBER.
@ PART DASH NO. 08 IS UNJC, OTHERS ARE UNJF.

NUT, SELF-LOCKING, PLATE, ONE LUG, LOW HEIGHT, ALLOY STEEL, 450°F, 125 KSI Ftu

MS21051

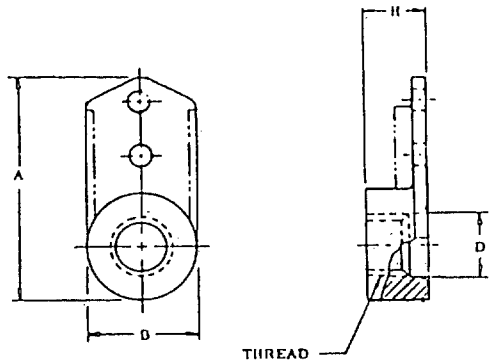

TABLE I. DIMENSIONS AND CHARACTERISTICS

PART NO. MS21051- PLAIN HOLES FILM LUBRICATED		THREAD @ SIZE __UNJ_-3B	DIMENSIONS				AXIAL STRENGTH LBS-MIN
DRY	NON-DRY		A MAX	B MAX	D DIA MIN	H MAX	
L06	06	.1380-32	.935	.297	--	.171	1130
L08	08	.1640-32	.935	.297	.168	.250	1720
L3	3	.1900-32	.950	.328	.194	.250	2460
L4	4	.2500-28	.993	.414	.254	.281	4580
L5	5	.3125-24	1.210	.505	.317	.328	7390
L6	6	.3750-20	1.264	.614	.379	.344	11450

FOR COUNTERSUNK OR DIMPLED HOLES ADD "K" AFTER PART DASH NUMBER.
COUNTERSUNK OR DIMPLED HOLES NOT AVAILABLE IN -6K OR L6K PART NO.
@ PART NO. WITH "0" IN DASH NO. MEANS UNJC (06, 08), OTHERS MEAN UNJF.

NUT, SELF-LOCKING, PLATE, ONE LUG, LOW HEIGHT, CRES, 450°F AND 800°F, 125 KSI Ftu

MS21052

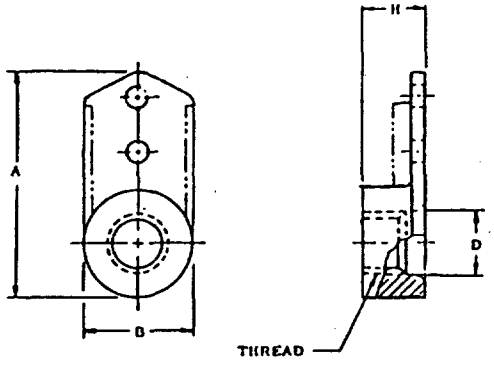

TABLE I. DIMENSIONS AND CHARACTERISTICS

PART NO. MS21052- PLAIN HOLES FILM LUBRICATED		THREAD @ SIZE __UNJ_-3B	DIMENSIONS				AXIAL STRENGTH LBS-MIN
450°F DRY	800°F NON-DRY		A MAX	B MAX	D DIA MIN	H MAX	
L06	06	.1380-32	.935	.297	--	.171	1130
L08	08	.1640-32	.935	.297	.168	.250	1720
L3	3	.1900-32	.950	.328	.194	.250	2460
L4	4	.2500-28	.993	.414	.254	.281	4580
L5	5	.3125-24	1.210	.505	.317	.328	7390
L6	6	.3750-24	1.264	.614	.379	.344	11450

FOR COUNTERSUNK OR DIMPLED HOLES ADD "K" AFTER PART DASH NUMBER.
COUNTERSUNK OR DIMPLED HOLES NOT AVAILABLE IN L6K OR -6K.
FOR WELDING PROJECTIONS ADD "W" AFTER PART DASH NUMBER.
@ PART NO. WITH "0" IN DASH NO. MEANS UNJC (06, 08), OTHERS MEAN UNJF.

75

NUT, SELF-LOCKING, PLATE, ONE LUG, LOW HEIGHT, ALLOY STEEL, 450°F, 125 KSI Ftu

MS21053

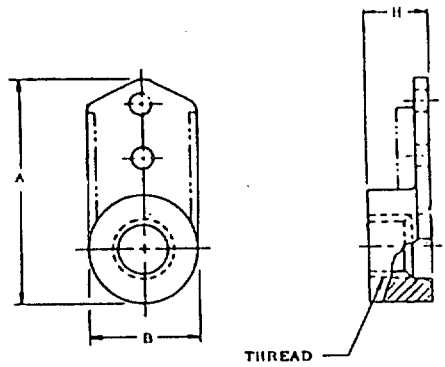

TABLE I. DIMENSIONS AND CHARACTERISTICS

PART NO. MS21053 PLAIN HOLES FILM LUBRICATED		THREAD @ SIZE __UNJ_-3B	DIMENSIONS			AXIAL STRENGTH LBS-MIN
DRY	NON-DRY		A MAX	B MAX	H MAX	
L08	-08	.1640-32	.997	.422	.272	1720
L3	-3	.1900-32	1.013	.453	.281	2460
L4	-4	.2500-28	1.252	.619	.340	4580
L5	-5	.3125-24	1.340	.766	.422	7390

FOR COUNTERSUNK OR DIMPLED HOLES ADD "K" AFTER PART DASH NUMBER.
@ PART NO. WITH "0" IN DASH NO. MEANS UNJC (08), OTHERS MEAN UNJF.

NUT, SELF-LOCKING, PLATE, ONE LUG, LOW HEIGHT, CRES, 450°F AND 800°F, 125 KSI Ftu

MS21054

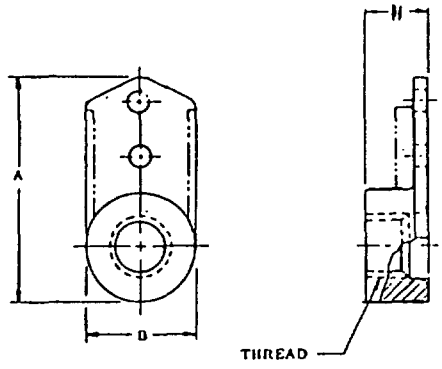

TABLE I. DIMENSIONS AND CHARACTERISTICS

PART NO. MS21054 PLAIN HOLES FILM LUBRICATED		THREAD @ SIZE	DIMENSIONS			AXIAL STRENGTH
450°F DRY	800°F NON-DRY	__UNJ_-3B	A MAX	B MAX	H MAX	LBS-MIN
L08	-08	.1640-32	.997	.422	.272	1720
L3	-3	.1900-32	1.013	.453	.281	2460
L4	-4	.2500-28	1.252	.619	.340	4580
L5	-5	.3125-24	1.340	.766	.422	7390

FOR COUNTERSUNK OR DIMPLED HOLES ADD "K" AFTER PART DASH NUMBER.
FOR WELDING PROJECTIONS ADD "W" AFTER PART DASH NUMBER.
@ PART DASH NO. 08 IS UNJC, OTHERS ARE UNJF.

NUT, SELF-LOCKING, PLATE, CORNER, LOW HEIGHT, ALLOY STEEL, 450°F, 125 KSI Ftu

MS21055

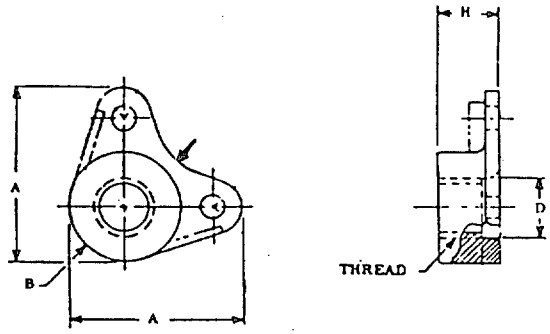

TABLE I. DIMENSIONS AND CHARACTERISTICS

PART NO. MS21055 PLAIN HOLES FILM LUBRICATED		THREAD @ SIZE __UNJ_-3B	DIMENSIONS				AXIAL STRENGTH LBS-MIN
DRY	NON-DRY		A MAX	B MAX	D DIA MIN	H MAX	
L06	-06	.1380-32	.637	.133	--	.171	1130
L08	-08	.1640-32	.637	.149	.168	.250	1720
L3	-3	.1900-32	.653	.164	.194	.250	2460
L4	-4	.2500-28	.852	.207	.254	.281	4580
L5	-5	.3125-24	.914	.248	.317	.328	7390
L6	-6	.3750-24	.968	.307	.379	.344	11450

FOR COUNTERSUNK OR DIMPLED HOLES ADD "K" AFTER PART DASH NUMBER.
COUNTERSUNK OR DIMPLED HOLES NOT AVAILABLE IN -6K OR L6K PART NO.
@ PART NO. WITH "0" IN DASH NO. MEANS UNJC (06, 08), OTHERS MEAN UNJF.

NUT, SELF-LOCKING, PLATE, CORNER, LOW HEIGHT, CRES, 450°F AND 800°F, 125 KSI Ftu

MS21056

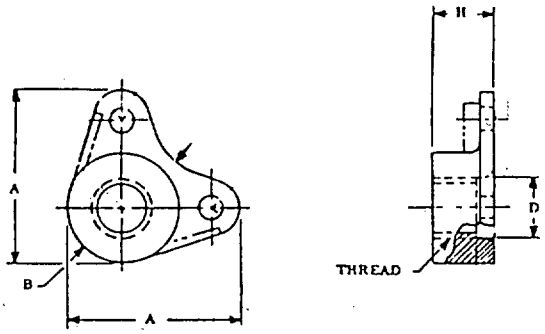

TABLE I. DIMENSIONS AND CHARACTERISTICS

PART NO. MS21056 PLAIN HOLES FILM LUBRICATED		THREAD @ SIZE __UNJ_-3B	DIMENSIONS				AXIAL STRENGTH LBS-MIN
450°F DRY	800°F NON-DRY		A MAX	B MAX	D DIA MIN	H MAX	
L06	-06	.1380-32	.637	.133	--	.171	1130
L08	-08	.1640-32	.637	.149	.168	.250	1720
L3	-3	.1900-32	.653	.164	.194	.250	2460
L4	-4	.2500-28	.852	.207	.254	.281	4580
L5	-5	.3125-24	.914	.248	.317	.328	7390
L6	-6	.3750-24	.968	.307	.379	.344	11450

FOR COUNTERSUNK OR DIMPLED HOLES ADD "K" AFTER PART DASH NUMBER.
COUNTERSUNK OR DIMPLED HOLES NOT AVAILABLE IN L6K OR -6K.
FOR WELDING PROJECTIONS ADD "W" AFTER PART DASH NUMBER.
@ PART NO. WITH "0" IN DASH NO. MEANS UNJC (06, 08), OTHERS MEAN UNJF.

NUT, SELF-LOCKING, PLATE, CORNER, LOW HEIGHT, ALLOY STEEL, 450°F, 125 KSI Ftu

MS21057

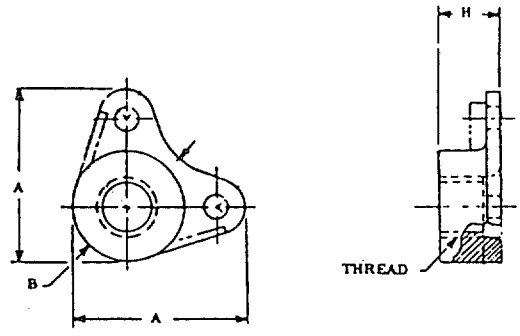

TABLE I. DIMENSIONS AND CHARACTERISTICS

PART NO. MS21057 PLAIN HOLES FILM LUBRICATED		THREAD @ SIZE __UNJ_-3B	DIMENSIONS			AXIAL STRENGTH LBS-MIN
DRY	NON-DRY		A MAX	B MAX	H MAX	
L08	-08	.1640-32	.700	.211	.272	1720
L3	-3	.1900-32	.716	.227	.281	2460
L4	-4	.2500-28	.955	.310	.340	4580
L5	-5	.3125-24	1.044	.383	.422	7390

FOR COUNTERSUNK OR DIMPLED HOLES ADD "K" AFTER PART DASH NUMBER.
@ PART NO. WITH "0" IN DASH NO. MEANS UNJC (08), OTHERS MEAN UNJF.

NUT, SELF-LOCKING, PLATE, CORNER, LOW HEIGHT, CRES, 450°F AND 800°F, 125 KSI Ftu

MS21058

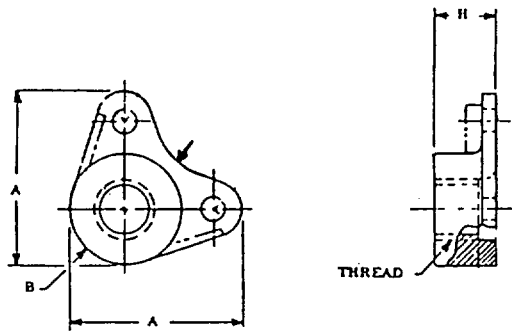

TABLE I. DIMENSIONS AND CHARACTERISTICS

PART NO. MS21058 PLAIN HOLES FILM LUBRICATED		THREAD @ SIZE	DIMENSIONS			AXIAL STRENGTH
450°F DRY	800°F NON-DRY	__UNJ_-3B	A MAX	B MAX	H MAX	LBS-MIN
L08	-08	.1640-32	.700	.211	.272	1720
L3	-3	.1900-32	.716	.227	.281	2460
L4	-4	.2500-28	.955	.310	.340	4580
L5	-5	.3125-24	1.044	.383	.422	7390

FOR COUNTERSUNK OR DIMPLED HOLES ADD "K" AFTER PART DASH NUMBER.
FOR WELDING PROJECTIONS ADD "W" AFTER PART DASH NUMBER.
@ PART DASH NO. 08 IS UNJC, OTHERS ARE UNJF.

81

NUT, SELF-LOCKING, PLATE, TWO LUG, FLOATING, LOW HEIGHT, ALLOY STEEL, 450°F, 125 KSI Ftu

MS21059

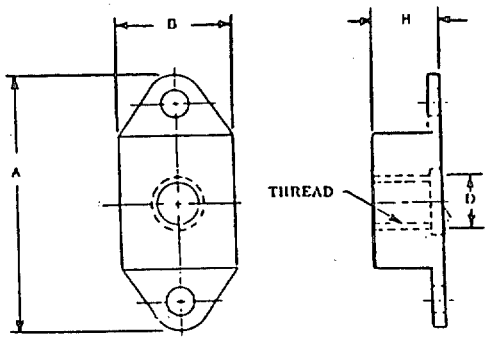

TABLE I. DIMENSIONS AND CHARACTERISTICS

PART NO. MS21059 PLAIN HOLES FILM LUBRICATED		THREAD @ SIZE	DIMENSIONS				AXIAL STRENGTH LBS-MIN
DRY	NON-DRY	UNJ -3B	A MAX	B MAX	D DIA MIN	H MAX	
L04	-04	.1120-40	.948	.416	--	.175	750
L06	-06	.1380-32	.948	.416	--	.203	1130
L08	-08	.1640-32	.948	.416	.168	.250	1720
L3	-3	.1900-32	.948	.416	.194	.250	2460
L4	-4	.2500-28	1.292	.516	.254	.281	4580
L5	-5	.3125-24	1.292	.609	.317	.328	7390
L6	-6	.3750-24	1.292	.680	.379	.344	11450

FOR COUNTERSUNK OR DIMPLED HOLES ADD "K" AFTER PART DASH NUMBER.
COUNTERSUNK OR DIMPLED HOLES NOT AVAILABLE IN -6K OR L6K PART NO.
@ PART NO. WITH "0" IN DASH NO. MEANS UNJC (04, 06, 08), OTHERS MEAN UNJF.

NUT, SELF-LOCKING, PLATE, TWO LUG, FLOATING, LOW HEIGHT, CRES, 450°F AND 800°F, 125 KSI Ftu

MS21060

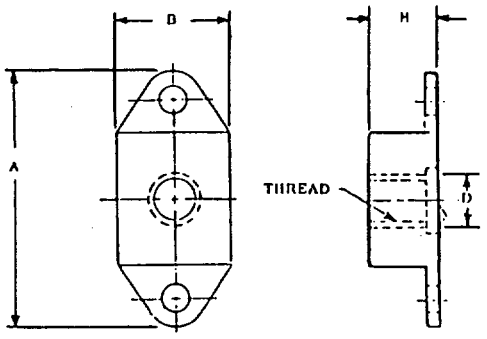

TABLE I. DIMENSIONS AND CHARACTERISTICS

PART NO. MS21060 PLAIN HOLES FILM LUBRICATED		THREAD @ SIZE __UNJ_-3B	DIMENSIONS				AXIAL STRENGTH LBS-MIN
450°F DRY	800°F NON-DRY		A MAX	B MAX	D DIA MIN	H MAX	
L04	-04	.1120-40	.948	.416	--	.175	750
L06	-06	.1380-32	.948	.416	--	.203	1130
L08	-08	.1640-32	.948	.416	.168	.250	1720
L3	-3	.1900-32	.948	.416	.194	.250	2460
L4	-4	.2500-28	1.292	.516	.254	.281	4580
L5	-5	.3125-24	1.292	.609	.317	.328	7390
L6	-6	.3750-24	1.292	.680	.379	.344	11450

FOR COUNTERSUNK OR DIMPLED HOLES ADD "K" AFTER PART DASH NUMBER.
COUNTERSUNK OR DIMPLED HOLES NOT AVAILABLE IN L6K OR -6K.
FOR WELDING PROJECTIONS ADD "W" AFTER PART DASH NUMBER.
@ PART NO. WITH "O" IN DASH NO. MEANS UNJC (04, 06, 08), OTHERS MEAN UNJF.

NUT, SELF-LOCKING, PLATE, ONE LUG, FLOATING, LOW HEIGHT, ALLOY STEEL, 450°F, 125 KSI Ftu

MS21061

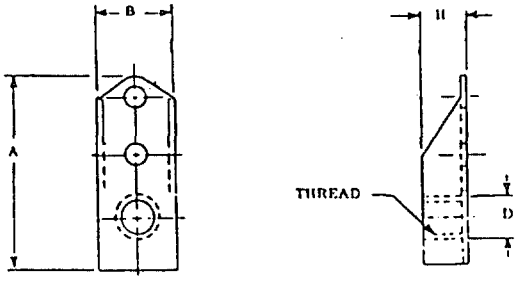

TABLE I. DIMENSIONS AND CHARACTERISTICS

PART NO. MS21061 PLAIN HOLES FILM LUBRICATED		THREAD @ SIZE __UNJ_-3B	DIMENSIONS				AXIAL STRENGTH LBS-MIN
DRY	NON-DRY		A MAX	B MAX	D DIA MIN	H MAX	
L04	-04	.1120-40	1.051	.422	--	.175	750
L06	-06	.1380-32	1.051	.422	--	.203	1130
L08	-08	.1640-32	1.051	.422	.168	.250	1720
L3	-3	.1900-32	1.051	.422	.194	.250	2460
L4	-4	.2500-28	1.306	.531	.254	.281	4580
L5	-5	.3125-24	1.396	.641	.317	.328	7390

FOR COUNTERSUNK OR DIMPLED HOLES ADD "K" AFTER PART DASH NUMBER.
@ PART NO. WITH "0" IN DASH NO. MEANS UNJC (04, 06, 08), OTHERS MEAN UNJF.

NUT, SELF-LOCKING, PLATE, ONE LUG, FLOATING, LOW HEIGHT, CRES, 450°F AND 800°F, 125 KSI Ftu

MS21062

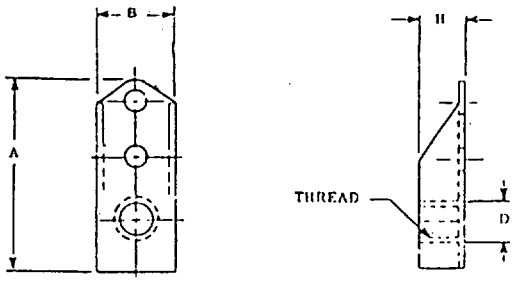

TABLE I. DIMENSIONS AND CHARACTERISTICS

PART NO. MS21062 PLAIN HOLES FILM LUBRICATED		THREAD @ SIZE __UNJ_-3B	DIMENSIONS				AXIAL STRENGTH LBS-MIN
450°F DRY	800°F NON-DRY		A MAX	B MAX	D DIA MIN	H MAX	
L04	-04	.1120-40	1.051	.422	--	.175	750
L06	-06	.1380-32	1.051	.422	--	.203	1130
L08	-08	.1640-32	1.051	.422	.168	.250	1720
L3	-3	.1900-32	1.051	.422	.194	.250	2460
L4	-4	.2500-28	1.306	.531	.254	.281	4580
L5	-5	.3125-24	1.306	.641	.317	.328	7390

FOR COUNTERSUNK OR DIMPLED HOLES ADD "K" AFTER PART DASH NUMBER.
COUNTERSUNK OR DIMPLED HOLES NOT AVAILABLE IN L6K OR -6K.
FOR WELDING PROJECTIONS ADD "W" AFTER PART DASH NUMBER.
@ PART NO. WITH "0" IN DASH NO. MEANS UNJC (04, 06, 08), OTHERS MEAN UNJF.

85

NUT, SELF-LOCK, PLATE, TWO LUG, REDUCED RIVET SPACE, LOW HT., STEEL, 450°F, 125 KSI Ftu

MS21069

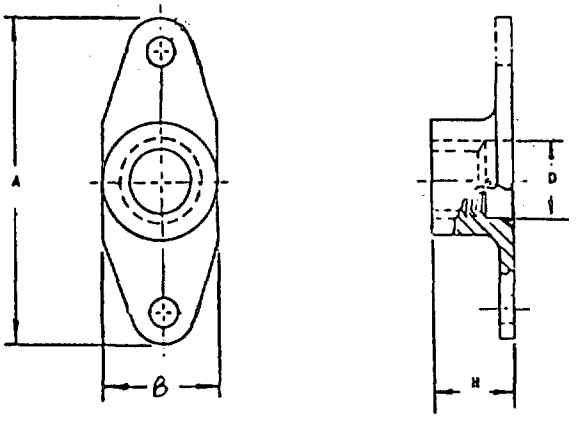

TABLE I. DIMENSIONS AND CHARACTERISTICS

PART NO. MS21069 PLAIN HOLES FILM LUBRICATED		THREAD @ SIZE UNJ -3B	DIMENSIONS				AXIAL STRENGTH LBS-MIN
DRY	NON-DRY		A MAX	B MAX	D DIA MIN	H MAX	
L04	-04	4-40	.630	.260	--	.143	750
L06	-06	6-32	.661	.265	--	.171	1130
L08	-08	8-32	.692	.297	.168	.250	1720
L3	-3	10-32	.724	.328	.194	.250	2460
L4	-4	1/4-28	.786	.414	.254	.281	4580
L5	-5	5/16-24	1.006	.505	.317	.328	7390
L6	-6	3/8-24	1.116	.614	.379	.344	11450

FOR COUNTERSUNK OR DIMPLED HOLES ADD "K" AFTER PART DASH NUMBER.
COUNTERSUNK OR DIMPLED HOLES NOT AVAILABLE IN -6K OR L6K PART NO.
@ PART NO. WITH "0" IN DASH NO. MEANS UNJC (04, 06, 08), OTHERS MEAN UNJF.

NUT, SELF-LOCKING, PLATE, TWO LUG, REDUCED RIVET SPACING, LOW HEIGHT, CRES, 125 KSI Ftu

MS21070

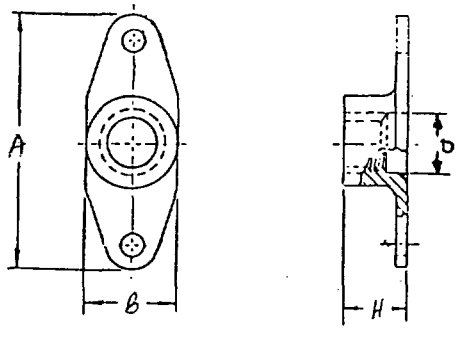

TABLE I. DIMENSIONS AND CHARACTERISTICS

PART NO. MS21070 PLAIN HOLES FILM LUBRICATED		THREAD @ SIZE __UNJ_-3B	DIMENSIONS				AXIAL STRENGTH LBS-MIN
450°F DRY	800°F NON-DRY		A MAX	B MAX	D DIA MIN	H	
L04	-04	4-40	.630	.260	--	.143	750
L06	-06	6-32	.661	.265	--	.171	1130
L08	-08	8-32	.692	.297	.168	.250	1720
L3	-3	10-32	.724	.328	.194	.250	2460
L4	-4	1/4-28	.786	.414	.254	.281	4580
L5	-5	5/16-24	1.006	.505	.317	.328	7390
L6	-6	3/8-24	1.116	.614	.379	.344	11450

FOR COUNTERSUNK OR DIMPLED HOLES ADD "K" AFTER PART DASH NUMBER.
COUNTERSUNK OR DIMPLED HOLES NOT AVAILABLE IN -6K OR L6K PART NO.
FOR WELDING PROJECTIONS ADD "W" AFTER PART DASH NUMBER.
@ PART NO. WITH "O" IN DASH NO. MEANS UNJC (04, 06, 08), OTHERS MEAN UNJF.

87

JT, SELF-LOCK, PLATE, ONE LUG, REDUCED RIVET SPACE, LOW HT., STEEL, 450°F, 125 KSI Ftu

MS21071

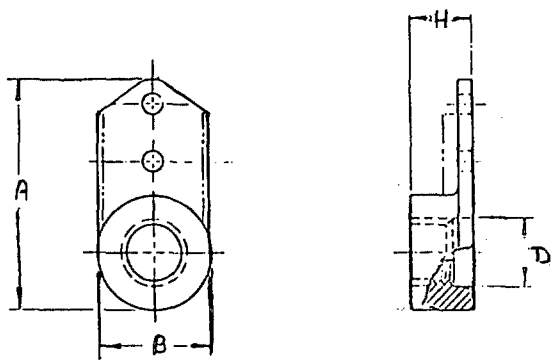

TABLE I. DIMENSIONS AND CHARACTERISTICS

PART NO. MS21071 PLAIN HOLES FILM LUBRICATED		THREAD @ SIZE	DIMENSIONS				AXIAL STRENGTH LBS-MIN
DRY	NON-DRY	UNJ -3B	A MAX	B MAX	D DIA MIN	H MAX	
L04	-04	4-40	.667	.260	--	.143	750
L06	-06	6-32	.684	.265	--	.171	1130
L08	-08	8-32	.716	.297	.168	.250	1720
L3	-3	10-32	.745	.328	.194	.250	2460
L4	-4	1/4-28	.822	.414	.254	.281	4580
L5	-5	5/16-24	1.026	.505	.317	.328	7390
L6	-6	3/8-24	1.139	.614	.379	.344	11450

FOR COUNTERSUNK OR DIMPLED HOLES ADD "K" AFTER PART DASH NUMBER.
COUNTERSUNK OR DIMPLED HOLES NOT AVAILABLE IN -6K OR L6K PART NO.
@ PART NO. WITH "0" IN DASH NO. MEANS UNJC (04, 06, 08), OTHERS MEAN UNJF.

NUT, SELF-LOCKING, PLATE, ONE LUG, REDUCED RIVET SPACING, LOW HEIGHT, CRES, 125 KSI Ftu

MS21072

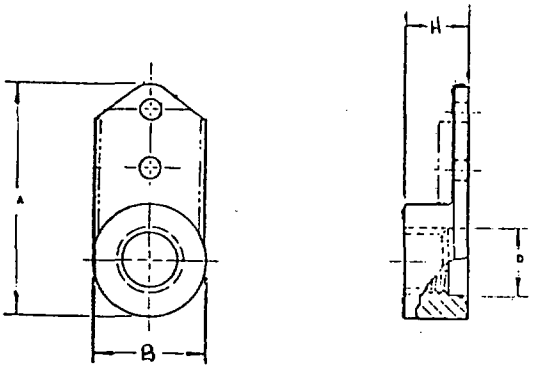

TABLE I. DIMENSIONS AND CHARACTERISTICS

PART NO. MS21072 PLAIN HOLES FILM LUBRICATED		THREAD @ SIZE __UNJ_-3B	DIMENSIONS				AXIAL STRENGTH LBS-MIN
450°F DRY	800°F NON-DRY		A MAX	B MAX	D DIA MIN	H	
L04	-04	4-40	.667	.260	--	.143	750
L06	-06	6-32	.684	.265	--	.171	1130
L08	-08	8-32	.716	.297	.168	.250	1720
L3	-3	10-32	.745	.328	.194	.250	2460
L4	-4	1/4-28	.822	.414	.254	.281	4580
L5	-5	5/16-24	1.026	.505	.317	.328	7390
L6	-6	3/8-24	1.139	.614	.379	.344	11450

FOR COUNTERSUNK OR DIMPLED HOLES ADD "K" AFTER PART DASH NUMBER.
COUNTERSUNK OR DIMPLED HOLES NOT AVAILABLE IN -6K OR L6K PART NO.
FOR WELDING PROJECTIONS ADD "W" AFTER PART DASH NUMBER.
@ PART NO. WITH "O" IN DASH NO. MEANS UNJC (04, 06, 08), OTHERS MEAN UNJF.

89

NUT, SELF-LOCK, PLATE, CORNER, REDUCED RIVET SPACE, LOW HEIGHT, STEEL, 450°F, 125 KSI Ftu

MS21073

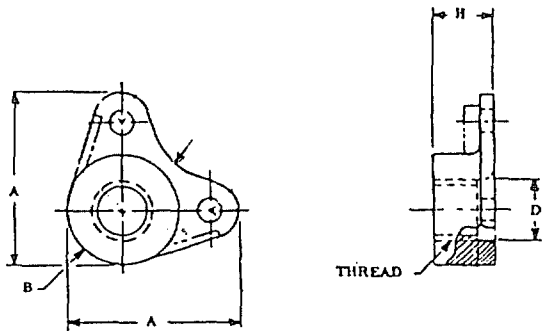

TABLE I. DIMENSIONS AND CHARACTERISTICS

PART NO. MS21073 PLAIN HOLES FILM LUBRICATED		THREAD @ SIZE __UNJ_-3B	DIMENSIONS				AXIAL STRENGTH LBS-MIN
DRY	NON-DRY		A MAX	B MAX	D DIA MIN	H MAX	
L02	-02	.0860-56	.288	.092	--	.110	440
L04	-04	.1120-40	.448	.156	--	.143	750
L06	-06	.1380-32	.463	.156	--	.171	1130
L08	-08	.1640-32	.497	.163	.168	.250	1720
L3	-3	.1900-32	.526	.176	.194	.250	2460
L4	-4	.2500-28	.603	.222	.254	.281	4580
L5	-5	.3125-24	.757	.273	.317	.328	7390
L6	-6	.3750-24	.870	.331	.379	.344	11450

FOR COUNTERSUNK OR DIMPLED HOLES ADD "K" AFTER PART DASH NUMBER.
COUNTERSUNK OR DIMPLED HOLES NOT AVAILABLE IN -6K OR L6K PART NO.
@ PART NO. WITH "0" IN DASH NO. MEANS UNJC (02, 04, 06, 08), OTHERS MEAN UNJF.

NUT, SELF-LOCKING, PLATE, CORNER, REDUCED RIVET SPACING, LOW HEIGHT, CRES, 125 KSI Ftu

MS21074

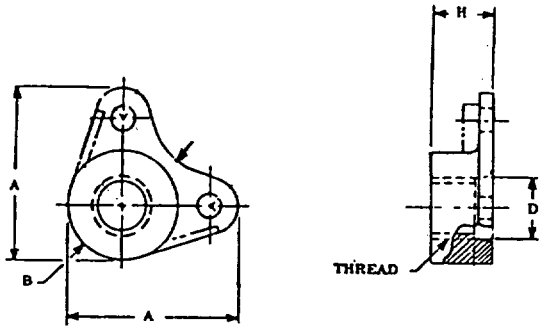

TABLE I. DIMENSIONS AND CHARACTERISTICS

PART NO. MS21074 PLAIN HOLES FILM LUBRICATED		THREAD @ SIZE __UNJ_-3B	DIMENSIONS				AXIAL STRENGTH LBS-MIN
450°F DRY	800°F NON-DRY		A MAX	B MAX	D DIA MIN	H	
L04	-04	4-40	.448	.156	--	.143	750
L06	-06	6-32	.463	.156	--	.171	1130
L08	-08	8-32	.497	.163	.168	.250	1720
L3	-3	10-32	.526	.176	.194	.250	2460
L4	-4	1/4-28	.603	.222	.254	.281	4580
L5	-5	5/16-24	.757	.273	.317	.328	7390
L6	-6	3/8-24	.870	.331	.379	.344	11450

FOR COUNTERSUNK OR DIMPLED HOLES ADD "K" AFTER PART DASH NUMBER.
COUNTERSUNK OR DIMPLED HOLES NOT AVAILABLE IN -6K OR L6K PART NO.
FOR WELDING PROJECTIONS ADD "W" AFTER PART DASH NUMBER.
@ PART NO. WITH "O" IN DASH NO. MEANS UNJC (04, 06, 08), OTHERS MEAN UNJF.

NUT, SELF-LOCK, PLATE, TWO LUG, FLOAT, RED. RIVET SPACE, LOW HT., STEEL, 450°F, 125 KSI Ftu

MS21075

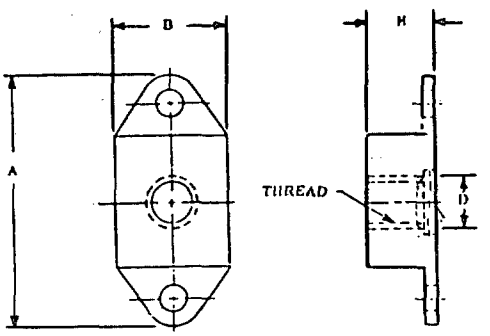

TABLE I. DIMENSIONS AND CHARACTERISTICS

PART NO. MS21075 PLAIN HOLES FILM LUBRICATED		THREAD @ SIZE __UNJ_-3B	DIMENSIONS				AXIAL STRENGTH LBS-MIN
DRY	NON-DRY		A MAX	B MAX	D DIA MIN	H MAX	
L04	-04	4-40	.651	.315	--	.153	750
L06	-06	6-32	.682	.357	--	.171	1130
L08	-08	8-32	.707	.367	.168	.250	1720
L3	-3	10-32	.739	.416	.194	.250	2460
L4	-4	1/4-28	.801	.500	.254	.281	4580
L5	-5	5/16-24	1.010	.581	.317	.328	7390

@ PART NO. WITH "0" IN DASH NO. MEANS UNJC (04, 06, 08), OTHERS MEAN UNJF.

NUT, SELF-LOCK, PLATE, TWO LUG, FLOAT, RED. RIVET SPACE, LOW HT., CRES, 125 KSI Ftu

MS21076

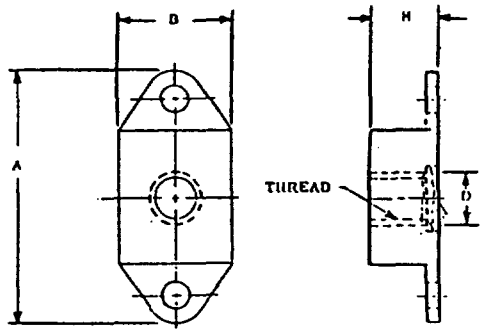

TABLE I. DIMENSIONS AND CHARACTERISTICS

PART NO. MS21076 PLAIN HOLES FILM LUBRICATED		THREAD @ SIZE __UNJ_-3B	DIMENSIONS				AXIAL STRENGTH LBS-MIN
450°F	800°F		A MAX	B MAX	D DIA MIN	H MAX	
L04	-04	4-40	.651	.315	--	.153	750
L06	-06	6-32	.682	.357	--	.171	1130
L08	-08	8-32	.707	.367	.168	.250	1720
L3	-3	10-32	.739	.416	.194	.250	2460
L4	-4	1/4-28	.801	.500	.254	.281	4580
L5	-5	5/16-24	1.010	.581	.317	.328	7390

@ PART NO. WITH "0" IN DASH NO. MEANS UNJC (04, 06, 08), OTHERS MEAN UNJF.

NUT, SELF-LOCKING, PLATE, TWO LUG, FLOATING, NON-METALLIC INSERT, STEEL, 250°F, 125 KSI Ftu

MS21077

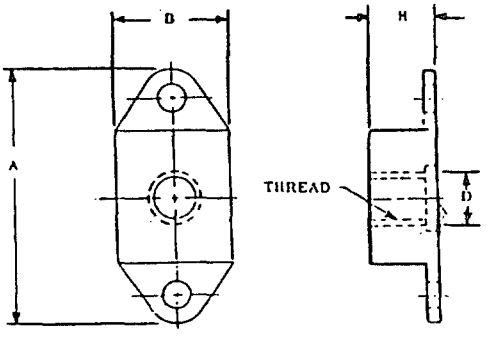

TABLE I. DIMENSIONS AND CHARACTERISTICS

PART NO. MS21077 PLAIN HOLES FILM LUBRICATED	THREAD @ SIZE __UNJ_-3B	DIMENSIONS A MAX	B MAX	D DIA MIN	H MAX	AXIAL STRENGTH LBS-MIN
-06	.1380-32	.984	.416	.138	.234	1130
-08	.1640-32	.984	.416	.164	.312	1720
-3	.1900-32	.984	.416	.190	.312	2460
-4	.2500-28	1.296	.516	.250	.387	4580
-5	.3125-24	1.296	.609	.312	.387	7390
-6	.3750-24	1.296	.641	.375	.479	11450

FOR COUNTERSUNK OR DIMPLED HOLES ADD "K" AFTER PART DASH NUMBER.
@ PART NO. WITH "0" IN DASH NO. MEANS UNJC (06, 08), OTHERS MEAN UNJF.

NUT, SELF-LOCKING, PLATE, ONE LUG, FLOATING, NON-METALLIC INSERT, STEEL, 250°F, 125 KSI Ftu

MS21082

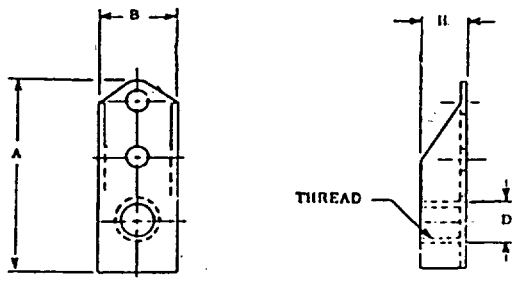

TABLE I. DIMENSIONS AND CHARACTERISTICS

PART NO. MS21082 PLAIN HOLES FILM LUBRICATED	THREAD @ SIZE __UNJ_-3B	DIMENSIONS A MAX	B MAX	D DIA MIN	H MAX	AXIAL STRENGTH LBS-MIN
-08	8-32	1.094	.422	.164	.312	1720
-3	10-32	1.094	.422	.190	.312	2460
-4	1/4-28	1.316	.531	.250	.387	4580
-5	5/16-24	1.378	.641	.312	.387	7390

FOR COUNTERSUNK OR DIMPLED HOLES ADD "K" AFTER PART DASH NUMBER.
@ PART NO. WITH "0" IN DASH NO. MEANS UNJC (08), OTHERS MEAN UNJF.

95

NUT, SELF-LOCKING, PLATE, TWO LUG, NON-METALLIC INSERT, STEEL, 250°F, 125 KSI Ftu

MS21078

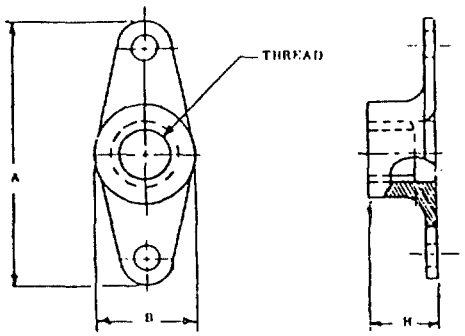

TABLE I. DIMENSIONS AND CHARACTERISTICS

PART NO. MS21078 PLAIN HOLES FILM LUBRICATED	THREAD @ SIZE __UNJ_-3B	DIMENSIONS (MAX)			AXIAL STRENGTH LBS-MIN
		A	B	H	
-04	.1120-40	.984	.406	.218	750
-06	.1380-32	.984	.406	.234	1130
-08	.1640-32	.984	.406	.297	1720
-3	.1900-32	.984	.406	.312	2460
-4	.2500-28	1.296	.516	.375	4580
-5	.3125-24	1.296	.531	.375	7390
-6	.3750-24	1.296	.641	.453	11450
-7	.4375-20	1.477	.719	.469	15450
-8	.5000-20	1.602	.859	.609	21110
-9	.5625-18	1.727	.953	.656	26810
-10	.6250-18	1.852	1.016	.765	34130

FOR COUNTERSUNK OR DIMPLED HOLES ADD "K" AFTER PART DASH NUMBER.
COUNTERSUNK OR DIMPLED HOLES NOT AVAILABLE IN -7K, -8K, -9K, OR -10K PART NO.
@ PART NO. WITH "0" IN DASH NO. MEANS UNJC (04, 06, 08), OTHERS MEAN UNJF.

NUT, SELF-LOCKING, PLATE, ONE LUG, NON-METALLIC INSERT, STEEL, 250°F, 125 KSI Ftu

MS21080

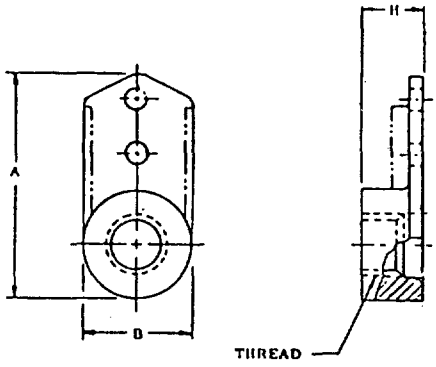

TABLE I. DIMENSIONS AND CHARACTERISTICS

PART NO. MS21080 PLAIN HOLES FILM LUBRICATED	THREAD @ SIZE __UNJ_-3B	DIMENSIONS (MAX)			AXIAL STRENGTH LBS-MIN
		A	B	H	
-06	6-32	1.031	.406	.297	1130
-08	8-32	1.031	.406	.297	1720
-3	10-32	1.031	.406	.312	2460
-4	1/4-28	1.062	.516	.375	4580
-5	5/16-24	1.250	.531	.375	7390
-6	3/8-24	1.344	.641	.453	11450

FOR COUNTERSUNK OR DIMPLED HOLES ADD "K" AFTER PART DASH NUMBER.
@ PART NO. WITH "O" IN DASH NO. MEANS UNJC (06, 08), OTHERS MEAN UNJF.

NUT, SELF-LOCKING, PLATE, CORNER, NON-METALLIC INSERT, STEEL, 250°F, 125 KSI Ftu

MS21081

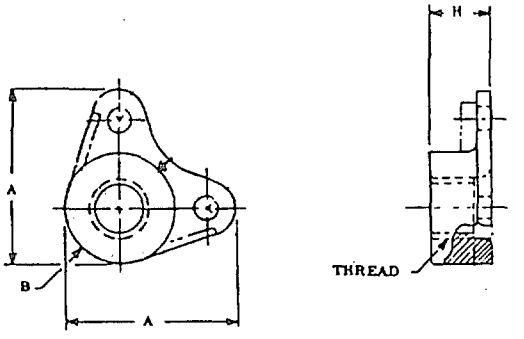

TABLE I. DIMENSIONS AND CHARACTERISTICS

PART NO. MS21081 PLAIN HOLES FILM LUBRICATED	THREAD @ SIZE __UNJ_-3B	DIMENSIONS (MAX) A	B	H	AXIAL STRENGTH LBS-MIN
-06	6-32	.703	.406	.234	1130
-08	8-32	.703	.406	.297	1720
-3	10-32	.703	.406	.312	2460
-4	1/4-28	.906	.514	.375	4580
-5	5/16-24	.937	.582	.375	7390
-6	3/8-24	1.008	.718	.453	11450
-7	7/16-20	1.125	.782	.469	15450
-8	1/2-20	1.234	.874	.609	21110
-10	5/8-18	1.437	1.010	.765	34130

FOR COUNTERSUNK OR DIMPLED HOLES ADD "K" AFTER PART DASH NUMBER.
COUNTERSUNK OR DIMPLED HOLES NOT AVAILABLE IN -7K, -8K, OR -10K PART NO.
@ PART NO. WITH "0" IN DASH NO. MEANS UNJC (06, 08), OTHERS MEAN UNJF.

NUT, SELF-LOCKING, HEXAGON, NON-METALLIC INSERT, LOW HEIGHT, 250°F

MS21083

TABLE I. DIMENSIONS AND CHARACTERISTICS

PART NO. M21083*	THREAD @ SIZE __UNJ_-3B	DIMENSIONS A MAX	DIMENSIONS B MAX	AXIAL STRENGTH LBS-MIN STEEL	AXIAL STRENGTH LBS-MIN ALUM	AXIAL STRENGTH LBS-MIN CRES
04	.1120-40	.125	.251	350	350	350
06	.1380-32	.141	.313	530	530	530
08	.1640-32	.188	.345	840	840	840
3	.1900-32	.188	.376	1230	1230	1230
4	.2500-28	.219	.439	2290	1145	2290
5	.3125-24	.266	.502	3690	1845	3690
6	.3750-24	.282	.564	5680	2840	5680
7	.4375-20	.328	.690	7680	3840	7680
8	.5000-20	.328	.752	10440	5220	7400
9	.5625-18	.375	.877	13280	6640	9380
10	.6250-18	.407	.940	16880	8440	11940
12	.7500-16	.422	1.064	24680	12340	17510
14	.8750-14	.485	1.252	33800	16900	23950
16	1.0000-12	.578	1.440	43900	21950	31500
18	1.1250-12	.672	1.627	57200	28600	40850
20	1.2500-12	.766	1.815	72000	36000	51780
22	1.3750-12	.828	2.008	88500	44250	63490
24	1.5000-12	.828	2.197	106800	53400	76300

@ PART NO. WITH "0" IN DASH NO. MEANS UNJC (04, 06, 08), OTHERS MEAN UNJF.
* ALUM ALLOY = "D" BEFORE DASH NO DIGITS. STEEL = "N" BEFORE DASH NO DIGITS. COPPER BASE ALLOY = "B" BEFORE DASH NO DIGITS. CRES = "C" BEFORE DASH NO DIGITS. PART NO. C12, C14, C18, C22, C24, D22, D24, B22, OR B24 NOT AVAILABLE.

99

NUT, SELF-LOCK, PLATE, SIDE BY SIDE, RED. RIVET SPACE, LOW HT., STEEL, 450°F, 125 KSI Ftu

MS21086

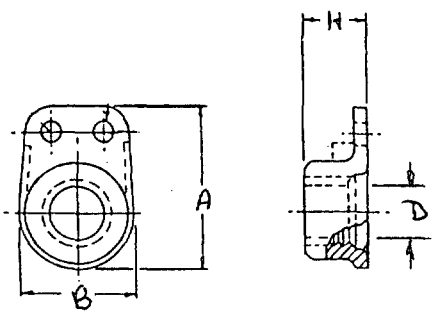

TABLE I. DIMENSIONS AND CHARACTERISTICS

PART NO. MS21086 PLAIN HOLES FILM LUBRICATED		THREAD @ SIZE __UNJ_-3B	DIMENSIONS				AXIAL STRENGTH LBS-MIN
			A	B	D DIA	H	
DRY	NON-DRY		MAX	MAX	MIN	MAX	
L08	-08	8-32	.486	.297	.168	.250	1720
L3	-3	10-32	.521	.328	.194	.250	2460
L4	-4	1/4-28	.591	.414	.254	.281	4580
L5	-5	5/16-24	.747	.505	.317	.328	7390
L6	-6	3/8-24	.856	.614	.379	.344	11450

FOR COUNTERSUNK OR DIMPLED HOLES ADD "K" AFTER PART DASH NUMBER.
COUNTERSUNK OR DIMPLED HOLES NOT AVAILABLE IN -6K OR L6K PART NO.
@ PART NO. WITH "0" IN DASH NO. MEANS UNJC (08), OTHERS MEAN UNJF.

NUT, SELF-LOCK, PLATE, SIDE BY SIDE, RED. RIVET SPACE, LOW HT., CRES, 125 KSI Ftu

MS21087

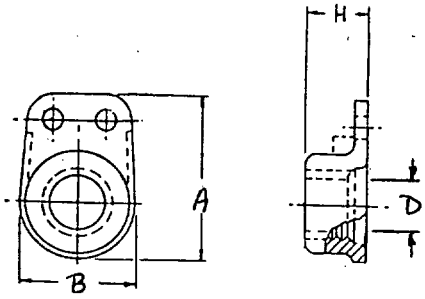

TABLE I. DIMENSIONS AND CHARACTERISTICS

PART NO. MS21087 PLAIN HOLES FILM LUBRICATED		THREAD @ SIZE	DIMENSIONS				AXIAL STRENGTH
450°F DRY	800°F NON-DRY	__UNJ_-3B	A MAX	B MAX	D MIN	H MAX	LBS-MIN
L08	-08	8-32	.486	.297	.168	.250	1720
L3	-3	10-32	.521	.328	.194	.250	2460
L4	-4	1/4-28	.591	.414	.254	.281	4580
L5	-5	5/16-24	.747	.505	.317	.328	7390
L6	-6	3/8-24	.856	.614	.379	.344	11450

FOR COUNTERSUNK OR DIMPLED HOLES ADD "K" AFTER PART DASH NUMBER.
COUNTERSUNK OR DIMPLED HOLES NOT AVAILABLE IN -6K OR L6K PART NO.
FOR WELDING PROJECTIONS ADD "W" AFTER PART DASH NUMBER.
@ PART NO. WITH "O" IN DASH NO. MEANS UNJC (08), OTHERS MEAN UNJF.

NUT, SELF-LOCKING, LIGHTWEIGHT, CASTELLATED, 450°F

MS14144

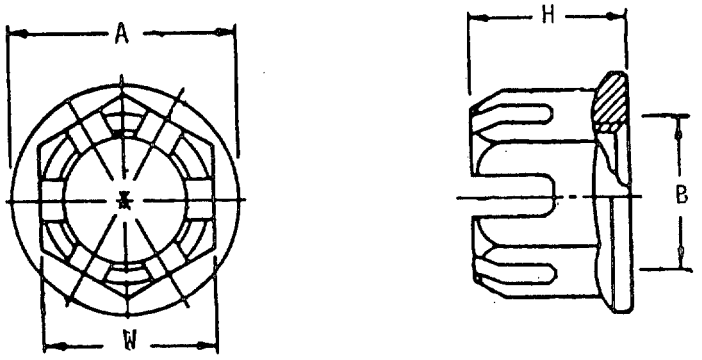

TABLE I. DIMENSIONS AND CHARACTERISTICS

PART NO. MS14144	THREAD SIZE UNJF-3B	DIMENSIONS (MAX)				ULT. TENS. STRENGTH LBS-MIN	COTTER PIN SIZE
		A	B	H	W		
L3	.1900-32	.325	.220	.265	.252	2460	3/64
L4	.2500-28	.420	.280	.296	.315	4580	1/16
L5	.3125-24	.520	.342	.343	.378	7390	1/16
L6	.3750-24	.579	.405	.421	.440	11450	3/32
L7	.4375-20	.645	.467	.468	.504	15450	3/32
L8	.5000-20	.770	.530	.578	.566	21110	3/32
L9	.5625-18	.850	.592	.624	.692	26810	1/8
L10	.6250-18	.910	.655	.734	.755	34130	1/8
L12	.7500-16	1.130	.785	.828	.880	50020	1/8
L14	.8750-14	1.345	.910	.921	1.006	68440	1/8
L16	1.0000-12	1.545	1.035	1.015	1.132	90000	1/8
L18	1.1250-12	1.745	1.160	1.171	1.257	116700	1/8

NUT, SELF-LOCKING, LIGHTWEIGHT, THIN, CASTELLATED, 450°F

MS14145

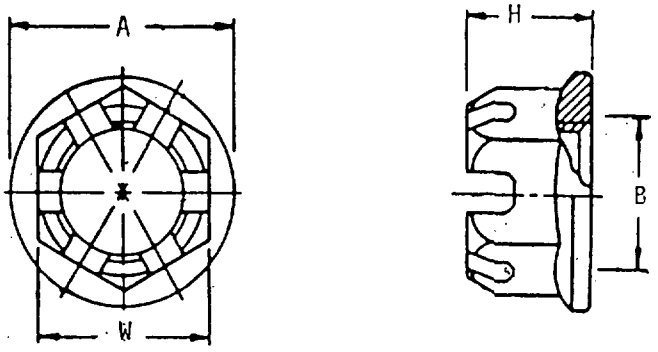

TABLE I. DIMENSIONS AND CHARACTERISTICS

PART NO. MS14145* DRY FILM LUB.	THREAD SIZE UNJF-3B	DIMENSIONS (MAX)				ULT. TENS. STRENGTH LBS-MIN	COTTER PIN SIZE
		A	B	H	W		
L3	.1900-32	.325	.220	.203	.252	1230	3/64
L4	.2500-28	.420	.280	.203	.315	2290	1/16
L5	.3125-24	.520	.342	.203	.378	3700	1/16
L6	.3750-24	.579	.405	.234	.440	5720	3/32
L7	.4375-20	.645	.467	.234	.504	7720	3/32
L8	.5000-20	.770	.530	.265	.566	10550	3/32
L9	.5625-18	.850	.592	.328	.692	13400	1/8
L10	.6250-18	.910	.655	.328	.755	17060	1/8
L12	.7500-16	1.130	.785	.390	.880	25010	1/8
L14	.8750-14	1.345	.910	.452	1.006	34220	1/8
L16	1.0000-12	1.545	1.035	.515	1.132	45000	1/8
L18	1.1250-12	1.745	1.160	.578	1.257	58350	1/8

* PART DASH NO. FOR NON-DRY LUB HAS NO "L" BEFORE NO. AND VALID NO. ARE 3 THRU 9 ONLY.

NUT, SELF-LOCKING, HEXAGON, CASTELLATED, NON-METALLIC INSERT, 250°F

MS17825

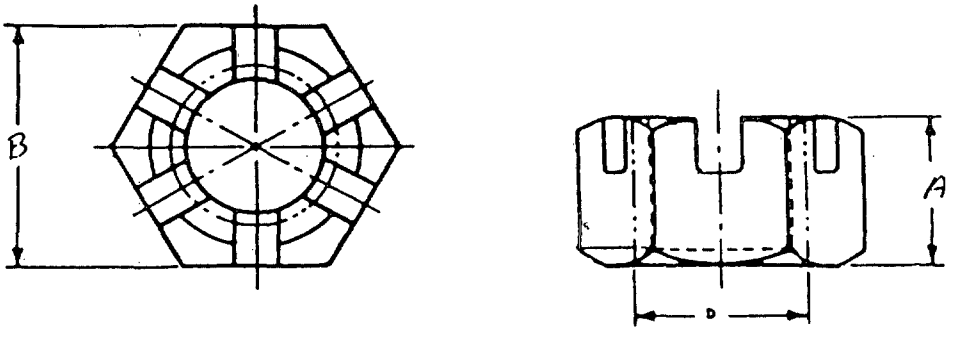

TABLE I. DIMENSIONS AND CHARACTERISTICS

PART NO. MS17825-	THREAD SIZE UNJF-3B	DIMENSIONS (MAX)			ULTIMATE TENSILE STRENGTH LBS-MIN
		A	B	D	
3	.1900-32	.265	.376	.215	1950
4	.2500-28	.296	.439	.275	3500
5	.3125-24	.343	.502	.338	5500
6	.3750-24	.421	.564	.400	9000
7	.4375-20	.468	.690	.463	12200
8	.5000-20	.578	.752	.525	16600
9	.5625-18	.624	.877	.587	21200
10	.6250-18	.734	.940	.650	27400
12	.7500-16	.828	1.064	.795	40000
14	.8750-14	.921	1.252	.900	54600
16	1.0000-12	1.015	1.440	1.025	71000
18	1.1250-12	1.171	1.627	1.150	92600
20	1.2500-12	1.265	1.815	1.275	118500

NUT, SELF-LOCKING, HEXAGON, THIN, CASTELLATED, NON-METALLIC INSERT, 250°F

MS17826

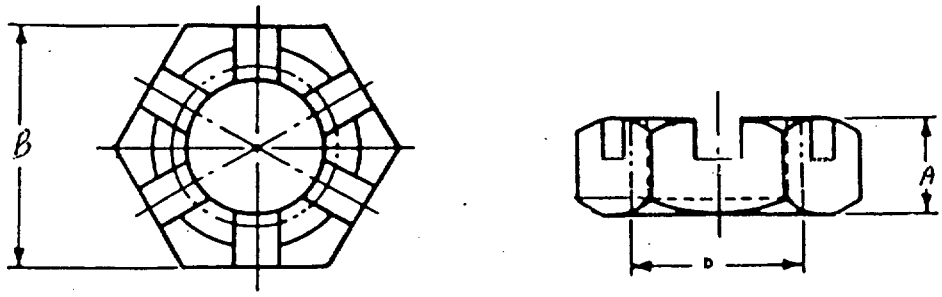

TABLE I. DIMENSIONS AND CHARACTERISTICS

PART NO. MS17826-	THREAD SIZE __UNJF-3B	DIMENSIONS (MAX)			ULTIMATE TENSILE STRENGTH LBS-MIN
		A	B	D	
3	.1900-32	.203	.376	.215	1000
4	.2500-28	.203	.439	.275	1800
5	.3125-24	.203	.502	.338	2900
6	.3750-24	.234	.564	.400	4100
7	.4375-20	.234	.690	.463	5000
8	.5000-20	.265	.752	.525	5600
9	.5625-18	.328	.877	.587	7800
10	.6250-18	.328	.940	.650	10000
12	.7500-16	.390	1.064	.795	15500
14	.8750-14	.453	1.252	.900	22800
16	1.0000-12	.515	1.440	1.025	35500
18	1.1250-12	.578	1.627	1.150	46300
20	1.2500-12	.640	1.815	1.275	59200

NUT, SELF-LOCKING, HEXAGON, THIN, 450°F, 80 KSI Ftu

MS21245

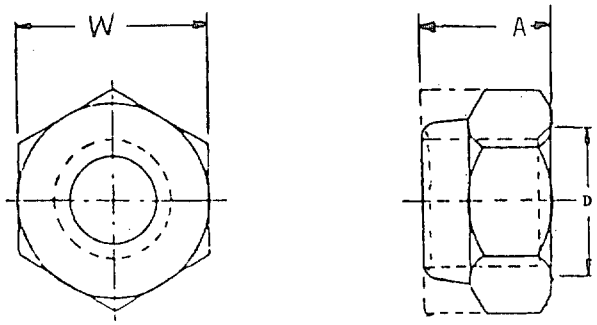

TABLE I. DIMENSIONS AND CHARACTERISTICS

PART NO. M21245- FILM LUBRICATED NON-DRY	THREAD SIZE __UNJF-3B	DIMENSIONS (MAX)			AXIAL STRENGTH LBS-MIN
		A	D	W	
8	.5000-20	.328	.551	.752	13750
9	.5625-18	.375	.614	.877	17400
12	.7500-16	.422	.807	1.064	31800
14	.8750-14	.485	.933	1.252	43150
20	1.2500-12	.766	1.310	1.814	90000

NUT, SELF-LOCKING, 12 POINT, CAPTIVE WASHER, STEEL, 450°F, 160 KSI Ftu

MS90415

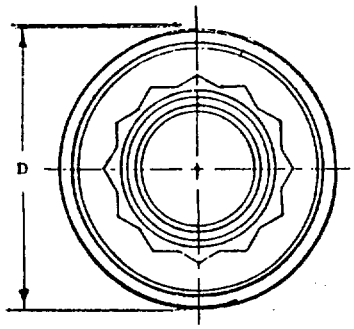

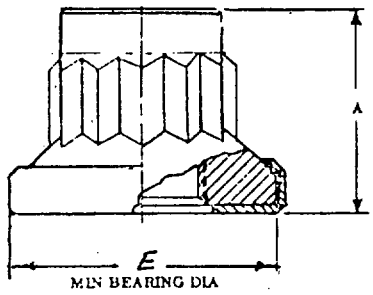

TABLE I. DIMENSIONS AND CHARACTERISTICS

PART NO. MS90415 PLAIN HOLES FILM LUBRICATED DRY	THREAD SIZE UNJF-3B	DIMENSIONS A MAX	D MAX	E MIN	AXIAL STRENGTH LBS-MIN
-3	.1900-32	.305	.445	.355	3470
-4	.2500-28	.350	.530	.416	6200
-5	.3125-24	.385	.640	.514	9820
-6	.3750-24	.520	.680	.610	15200

NUT, SELF-LOCKING, HEXAGON, C'BORED, CASTELLATED, CAPTIVE WASHER, 450°F

MS14146

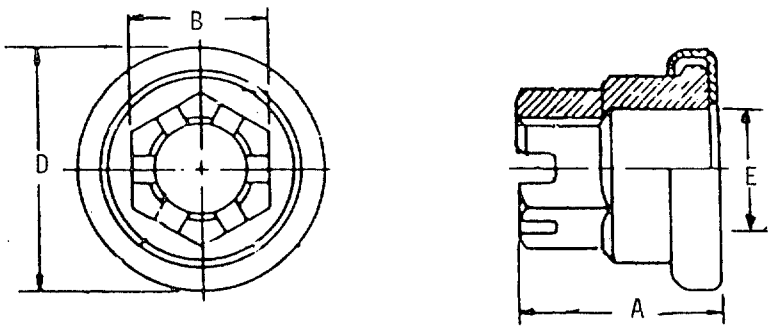

TABLE I. DIMENSIONS AND CHARACTERISTICS

PART NO. MS14146- DRY FILM LUB.	THREAD SIZE UNJF-3B	DIMENSIONS (MAX)				ULTIMATE TENS. STRENGTH LBS-MIN
		A	B	D	E DIA	
-3	.1900-32	.374	.252	.475	.240	1230
-4	.2500-28	.405	.316	.545	.309	2290
-5	.3125-24	.436	.378	.625	.395	3700
-6	.3750-24	.482	.440	.695	.460	5720
-7	.4375-20	.513	.504	.770	.529	7720
-8	.5000-20	.576	.566	.910	.614	10550

NUT, SELF-LOCK, HEX., C'BORED, CASTELLATED, ASSEMBLED WASHER, NON-METALLIC INSERT, 250°F

MS21224

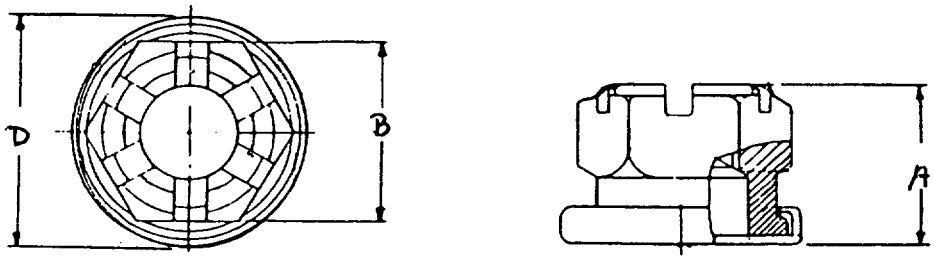

TABLE I. DIMENSIONS AND CHARACTERISTICS

PART NO. MS21224-	THREAD SIZE __UNJF-3B	DIMENSIONS (MAX)			ULTIMATE TENS. STRENGTH LBS-MIN
		A	B	D	
3	.1900-32	.374	.376	.490	1000
4	.2500-28	.405	.439	.560	1800
5	.3125-24	.436	.502	.640	2900
6	.3750-24	.482	.564	.710	4100
7	.4375-20	.513	.627	.785	5000
8	.5000-20	.576	.752	.925	6600
9	.5625-18	.670	.877	1.080	7800
10	.6250-18	.822	1.002	1.224	10000
12	.7500-16	.951	1.064	1.283	15500
16	1.0000-12	1.202	1.440	1.707	35500

CRES = "C" AFTER DASH NO DIGITS.

301.49/301.50

NUTS

SCOPE: THIS SECTION COVERS MISCELLANEOUS TYPES OF NUTS. THESE NUTS ARE INTENDED FOR USAGE THROUGHOUT THE DEPARTMENT OF THE NAVY.

PART NUMBER EXAMPLE: SEE EACH MILITARY STANDARD

111

NUT, PLAIN, HEXAGON (JAM) UNC-2B AND UNF-2B

MS35691

PART NUMBER: MS35691-3

MS35691 -3

MILITARY STANDARD

DASH NUMBER
(FINISH: ADD "B" BEFORE DASH NO. FOR CORROSION RESISTANT STEEL NUTS FOR BLACK OXIDE COATING)

TABLE I. PART NUMBERS AND CHARACTERISTICS

PART NUMBER MS35691-	BASIC MAJOR DIA	NOMINAL SIZE	THREADS PER INCH	DIMENSIONS (MAX) F	DIMENSIONS (MAX) H
3	1/4	.2500	20UNC-2B	.4375	.163
7			28UNF-2B		
11	5/16	.3125	18UNC-2B	.5000	.195
15			24UNF-2B		
19	3/8	.3750	16UNC-2B	.5625	.227
23			24UNF-2B		
27	7/16	.4375	14UNC-2B	.6875	.260
31			20UNF-2B		
35	1/2	.5000	18UNF-2B	.7500	.323
39			20UNF-2B		
43	9/16	.5625	12UNC-2B	.8750	.324
47			18UNF-2B		
51	5/8	.6250	11UNC-2B	.9375	.387
55			18UNF-2B		

NUT, PLAIN, HEXAGON (JAM) UNC-2B AND UNF-2B

MS35691

TABLE I. PART NUMBERS AND CHARACTERISTICS (CONT.)

PART NUMBER MS35691-	BASIC MAJOR DIA	NOMINAL SIZE	THREADS PER INCH	DIMENSIONS (MAX)	
				F	H
59	3/4	.750	10UNC-2B	1.1250	.446
61			16UNF-2B		
67	7/8	.875	9UNC-2B	1.3125	.510
71			14UNF-2B		
75	1	1.000	8UNF-2B	1.5000	.575
79			12UNF-2B		
83	1-1/8	1.125	7UNC-2B	1.6875	.639
87			12UNF-2B		
91	1-1/4	1.250	7UNC-2B	1.8750	.751
95			12UNF-2B		
99	1-3/8	1.375	6UNC-2B	2.0625	.815
103			12UNF-2B		
107	1-1/2	1.500	6UNC-2B	2.2500	.880
111			12UNF-2B		
115	1-3/4	1.750	5UNC-2B	2.6250	1.009
119	2	2.000	4-1/2UNC-2B	3.0000	1.138
123	2-1/4	2.250		3.3750	1.251
127	2-1/2	2.500	4UNC-2B	3.7500	1.505
131	2-3/4	2.750		4.1250	1.634
135	3	3.000		4.5000	1.763

NUT, PLAIN, CAP, LOW CROWN, UNC-2B AND UNF-2B

MS24679

PART NUMBER: MS24679-1

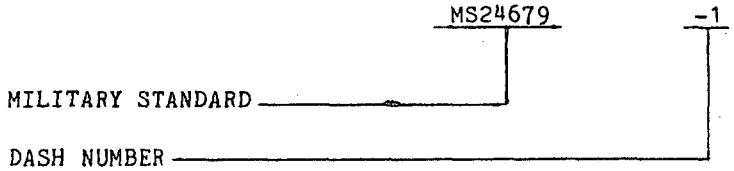

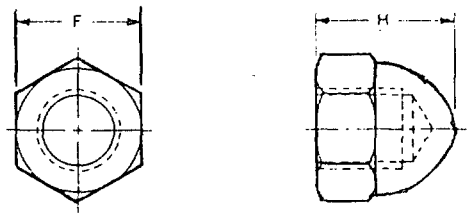

TABLE I. PART NUMBERS AND CHARACTERISTICS

PART NUMBER MS24679-	NOMINAL SIZE	THREADS PER INCH	DIMENSIONS (MAX) F	DIMENSIONS (MAX) H
21	.138	32UNC-2B	.3125	.34
81		40UNF-2B		
22	.164	32UNC-2B	.3125	.34
82		36UNF-2B		
23	.190	24UNC-2B	.3750	.41
83		32UNF-2B		
25	.250	20UNC-2B	.4375	.47
85		28UNF-2B		
26	.3125	18UNC-2B	.5000	.53
86		24UNF-2B		
27	.375	16UNC-2B	.5625	.62
87		24UNF-2B		
29	.500	13UNC-2B	.7500	.81
89		20UNF-2B		
31	.625	11UNC-2B	.9375	1.00
91		18UNF-2B		
32	.750	10UNC-2B	1.0625	1.16
92		16UNF-2B		
34	1.000	8UNC-2B	1.4375	1.55
94		12UNF-2B		
36	1.250	7UNC-2B	1.8125	1.95
96		12UNF-2B		

FASTENERS, BLIND, HIGH STRENGTH, INSTALLATION FORMED,
CORROSION RESISTANT STEEL, HEAT RESISTANT STEEL AND TITANIUM

MIL-F-8975

SCOPE: THIS SECTION COVERS INSTALLATION FORMED HIGH STRENGTH, CORROSION RESISTANT, HEAT RESISTANT STEEL AND TITANIUM FASTENERS WHICH CAN BE INSTALLED FROM ONLY ONE SIDE OF AN ASSEMBLY. THESE FASTENERS ARE INTENDED FOR STRUCTURAL ATTACHMENTS.

FASTENER, BLIND, HIGH STRENGTH, FULL TYPE, POSITIVE
MECHANICAL LOCK, 100 FLUSH HEAD, CORROSION RESISTING STEEL, 95 KSI Fsu

MS21140

PART NUMBER EXAMPLE: MS21140-0803P

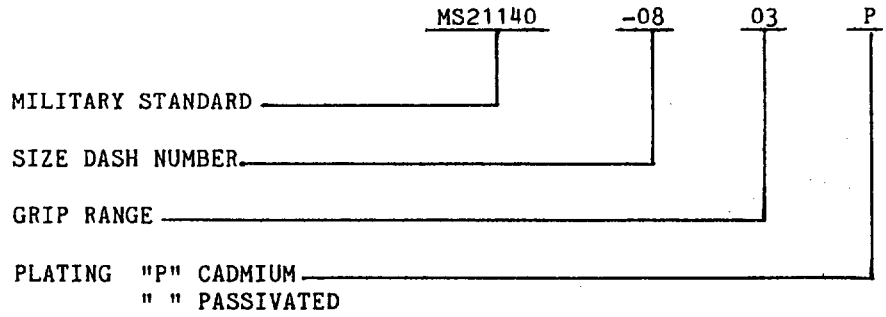

115

FASTENER, BLIND, HIGH STRENGTH, FULL TYPE, POSITIVE MECHANICAL LOCK, 100 FLUSH HEAD, CORROSION RESISTING STEEL, 95 KSI Fsu

MS21140

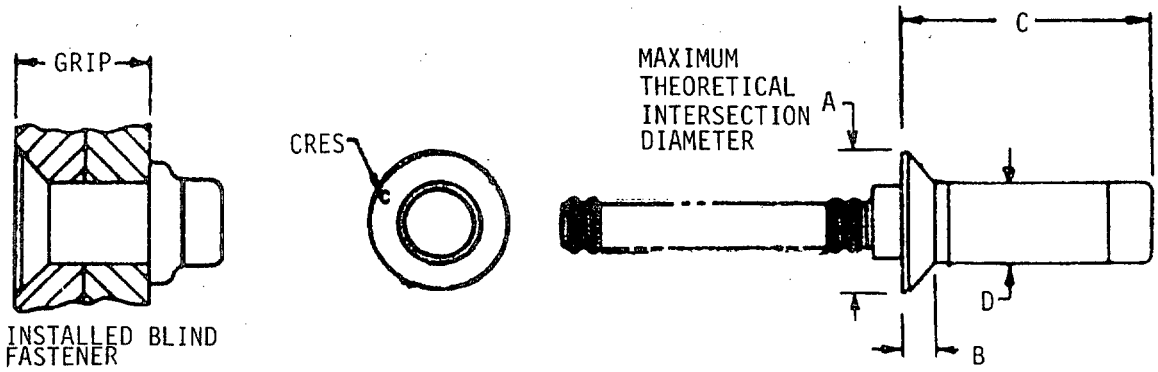

TABLE I. FASTENER DIMENSIONS AND STRENGTHS

PART NUMBER MS21140-		NOM SIZE	DIMENSIONS			INSTALLED FASTENER	
DOUBLE ACTION	SINGLE ACTION		A DIA	B MAX	D DIA	ULTIMATE SINGLE SHEAR LBS-MIN	ULTIMATE TENSILE LBS-MIN
05	--	5/32	.334	.074	.164 .162	1980	1150
06	--	3/16	.387	.082	.199 .197	2925	1690
--	08	1/4	.508	.108	.260 .258	5000	2900
--	10	5/16	.635	.140	.312 .310	7200	4170
--	12	3/8	.763	.168	.374 .372	10380	5970

FASTENER, BLIND, HIGH STRENGTH, FULL TYPE, POSITIVE
MECHANICAL LOCK, 100 FLUSH HEAD, CORROSION RESISTING STEEL, 95 KSI Fsu

MS21140

TABLE II. GRIP TABULATIONS

5/32 DIA (-05)			3/16 DIA (-06)			1/4 DIA (-08)		
GRIP DASH NO.	GRIP RANGE MAX	C MAX	GRIP DASH NO.	GRIP RANGE MAX	C MAX	GRIP DASH NO.	GRIP RANGE MAX	C MAX
-0502	.157	.404	-0602	.157	.457			
-0503	.220	.466	-0603	.220	.511	-0803	.220	.586
-0504	.282	.529	-0604	.282	.574	-0804	.282	.648
-0505	.345	.592	-0605	.345	.636	-0805	.345	.710
-0506	.407	.654	-0606	.407	.699	-0806	.407	.773
-0507	.470	.716	-0607	.470	.761	-0807	.470	.836
-0508	.532	.779	-0608	.532	.824	-0808	.532	.898
-0509	.595	.842	-0609	.595	.886	-0809	.595	.960
-0510	.657	.904	-0610	.657	.949	-0810	.657	1.023
-0511	.720	.966	-0611	.720	1.011	-0811	.720	1.086
-0512	.782	1.029	-0612	.782	1.074	-0812	.782	1.148
-0513	.845	1.092	-0613	.845	1.136	-0813	.845	1.210
-0514	.907	1.154	-0614	.907	1.199	-0814	.907	1.273
-0515	.970	1.216	-0615	.970	1.261	-0815	.970	1.336
-0516	1.032	1.279	-0616	1.032	1.324	-0816	1.032	1.398
			-0617	1.095	1.386	-0817	1.095	1.460
			-0618	1.157	1.449	-0818	1.157	1.523
			-0619	1.220	1.511	-0819	1.220	1.586
			-0620	1.282	1.574	-0820	1.282	1.648
						-0821	1.345	1.710
						-0822	1.407	1.773
						-0823	1.470	1.836
						-0824	1.532	1.898

117

FASTENER, BLIND, HIGH STRENGTH, FULL TYPE, POSITIVE
MECHANICAL LOCK, 100 FLUSH HEAD, CORROSION RESISTING STEEL, 95 KSI Fsu

MS21140

TABLE II. GRIP TABULATIONS (CONT.)

5/16 DIA (-10)			3/8 DIA (-12)		
GRIP DASH NO.	GRIP RANGE MAX	C MAX	GRIP DASH NO.	GRIP RANGE MAX	C MAX
-1004	.282	.713	-1204	.282	.790
-1005	.345	.775	-1205	.345	.853
-1006	.407	.838	-1206	.407	.915
-1007	.470	.900	-1207	.470	.977
-1008	.532	.963	-1208	.532	1.040
-1009	.595	1.025	-1209	.595	1.103
-1010	.657	1.088	-1210	.657	1.165
-1011	.720	1.150	-1211	.720	1.227
-1012	.782	1.213	-1212	.782	1.290
-1013	.845	1.275	-1213	.845	1.353
-1014	.907	1.338	-1214	.907	1.415
-1015	.970	1.400	-1215	.970	1.477
-1016	1.032	1.463	-1216	1.032	1.540
-1017	1.095	1.525	-1217	1.095	1.603
-1018	1.157	1.588	-1218	1.157	1.665
-1019	1.220	1.650	-1219	1.220	1.727
-1020	1.282	1.713	-1220	1.282	1.790
-1021	1.345	1.775	-1221	1.345	1.853
-1022	1.407	1.838	-1222	1.407	1.915
-1023	1.470	1.900	-1223	1.470	1.977
-1024	1.532	1.963	-1224	1.532	2.040
-1025	1.595	2.025	-1225	1.595	2.103
-1026	1.657	2.088	-1226	1.657	2.165
-1027	1.720	2.150	-1227	1.720	2.227
-1028	1.782	2.213	-1228	1.782	2.290
			-1229	1.865	2.333
			-1230	1.907	2.415
			-1231	1.970	2.477
			-1232	2.032	2.540

FASTENER, EXTERNALLY THREADED, 250°F, SELF-LOCKING ELEMENT

MIL-F-18240

SCOPE: THIS SECTION COVERS THE SELF-LOCKING ELEMENT TO BE USED IN EXTERNALLY THREADED FASTENERS, SUCH AS BOLTS AND SCREWS, TO BE USED IN APPLICATIONS WHERE THE TEMPERATURES WILL NOT EXCEED 250°F. THESE SELF-LOCKING ELEMENTS ARE INTENDED TO BE INCORPORATED IN EXTERNAL SCREW THREADS TO PROVIDE RESISTANCE DUE TO VIBRATION.

PART NUMBER EXAMPLE: MS21091-04-008

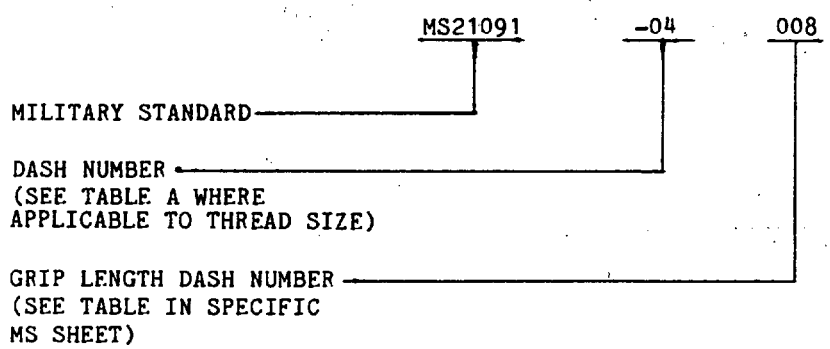

FASTENER, EXTERNALLY THREADED, 250°F, SELF-LOCKING ELEMENT

MIL-F-18240

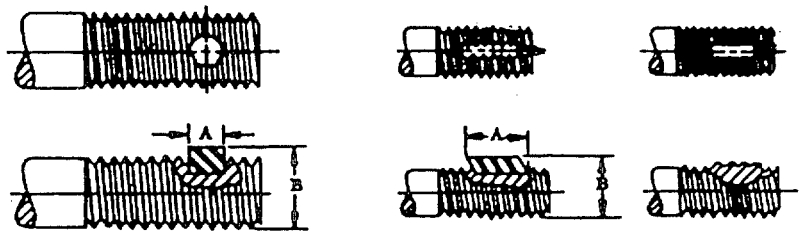

CONFIGURATION A
SLUG - ROUND OR HEX

CONFIGURATION B
STRIP OR PATCH

TABLE A.

PART NO. MS NO. GOVERNMENT DESIGNATION	NOMINAL THREAD SIZE	CONFIG-URATION	DIMENSIONS	
			A MAX	B MAX
04	4	A	.106	.115
		B	.250	
06	6	A	.106	.141
		B	.281	
08	8	A	.124	.167
		B	.344	
10	10	A	.124	.193
		B	.344	
40	1/4	A	.144	.253
		B	.375	
50	5/16	A	.188	.315
		B	.437	
60	3/8	A	.166	.378
		B	.500	
70	7/16	A	.166	.440
		B	.562	
80	1/2	A	.166	.503
		B	.600	

FASTENERS, EXTERNALLY THREADED, SELF-LOCKING DESIGN AND USAGE LIMITATIONS

MS15981

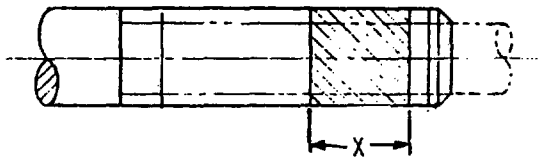

* TABLE I. DIMENSIONS

THREAD SIZE	X MIN
4-40	.125
6-32	.156
8-32	.156
10-32	.156
1/4-28	.178
5/16-24	.208
3/8-24	.208
7/16-20	.250
1/2-20	.250

* THIS IS A DESIGN STANDARD, NOT TO BE USED AS A PART NUMBER.
SEE TABLE A, MIL-F-18240.

FASTENERS, ROTARY, QUICK-OPERATING, HIGH STRENGTH

MIL-F-22978

SCOPE: THIS SECTION COVERS THE GENERAL REQUIREMENTS FOR A HIGH-STRENGTH, QUICK-OPERATING, ROTARY FASTENER. THESE FASTENERS ARE INTENDED FOR USE ON STRUCTURAL PANELS WHERE A HIGH-STRENGTH, ROTARY-TYPE, QUICK-OPERATING FASTENER IS REQUIRED FOR QUICK ACCESS. THESE FASTENERS ARE FLOATING TYPE AND HAVE A MINIMUM TENSILE STRENGTH OF 2210 POUNDS.

PART NUMBER EXAMPLE: MS17731-1

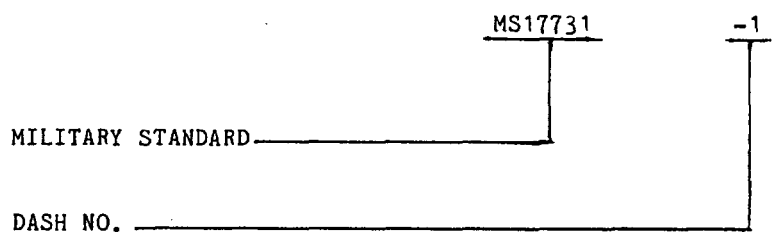

123

FASTENER, ROTARY, QUICK-OPERATING, FLUSH HEAD, FLOATING TYPE

MS17731

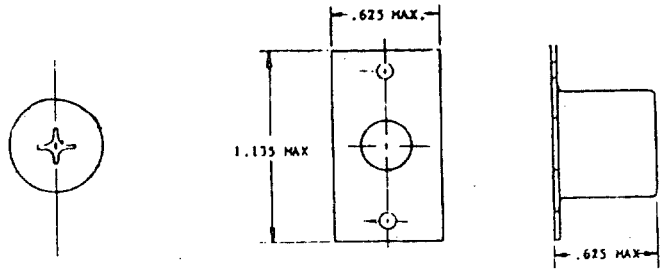

RECEPTACLE

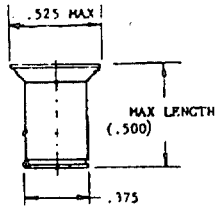

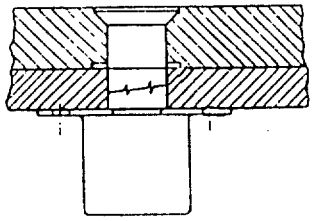

STUD

FASTENER ASSEMBLY (TYPICAL INSTALLATION)

TABLE I. DIMENSIONS AND CHARACTERISTICS

PART NO. MS17731-	GRIP RANGE T1 + T2	DIMENSIONS		
		FASTENER ASSY	STUD	RECEPTACLE
1	.150 - .220	.040	.015	.025
2	.221 - .290	.041	.016	
3	.291 - .360	.043	.018	
4	.361 - .430	.045	.020	
5	.431 - .500	.046	.021	
6	.501 - .570	.047	.022	
7	.571 - .640	.049	.024	
8	.641 - .710	.051	.026	
9	.711 - .780	.053	.028	

FASTENER, ROTARY, QUICK-OPERATING, PROTRUDING HEAD, FLOATING TYPE

MS17732

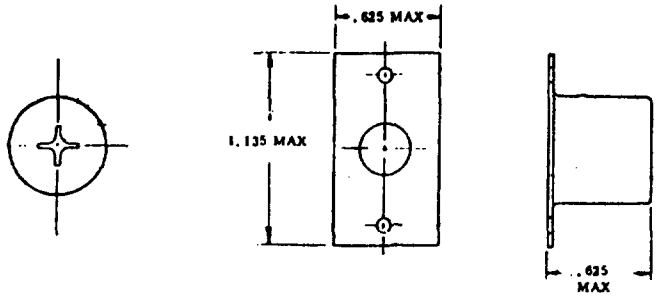

RECEPTACLE

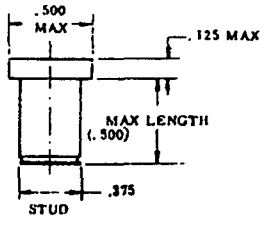

STUD

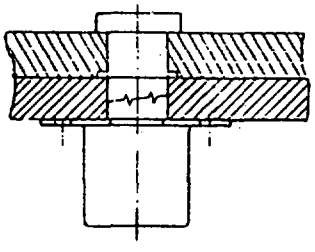

FASTENER ASSEMBLY (TYPICAL INSTALLATION)

TABLE I. DIMENSIONS AND CHARACTERISTICS

PART NO. MS17732-	GRIP RANGE T1 + T2	DIMENSIONS		
		FASTENER ASSY	STUD	RECEPTACLE
1	.116 - .185	.041	.016	.025
2	.186 - .255	.043	.018	
3	.256 - .325	.045	.020	
4	.326 - .395	.046	.021	
5	.396 - .465	.048	.023	
6	.466 - .535	.050	.025	
7	.536 - .605	.052	.027	
8	.606 - .675	.055	.030	
9	.676 - .745	.058	.033	

POSTS, BINDING, ELECTRICAL (INSULATED AND UNINSULATED)

MIL-P-55149

SCOPE: THIS SECTION COVERS THE GENERAL REQUIREMENTS FOR INSULATED BINDING POSTS AND UNINSULATED BINDING POSTS WITH INSULATED AND UNINSULATED CAPS.

TYPE DESIGNATION: PB01 F A 01

STYLE
PB AND SLASH SHEET
01, 02, 03,
05, 06, 07 OR 08

NONTURN FEATURE
D - DOWEL
F - FLATTED BOSS
K - KNURLED BASE
N - NONTURN NOT FURNISHED

INSULATION
A - INSULATED
C - UNINSULATED WITH
INSULATED CAP

IDENTIFICATION NUMBER
TYPE DESIGNATION NO.
ON SLASH SHEET
01, 02, 03 OR 04

POSTS, BINDING, ELECTRICAL (INSULATED), TYPES PB01FA01 TO PB01FA04

MIL-P-55159/1

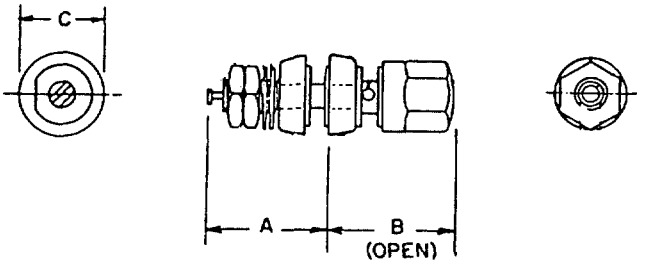

TYPE DESIGNATION	INSULATION COLOR	DIMENSIONS		
		A	B MAX	C
PB01FA01	RED	0.690	1.035	0.500
PB01FA02	BLACK	0.690	1.035	0.500
PB01FA03	RED	0.910	1.187	0.640
PB01FA04	BLACK	0.910	1.187	0.640

POSTS, BINDING, ELECTRICAL (UNINSULATED), TYPES PB02DC01 AND PB02DC02

MIL-P-55159/2

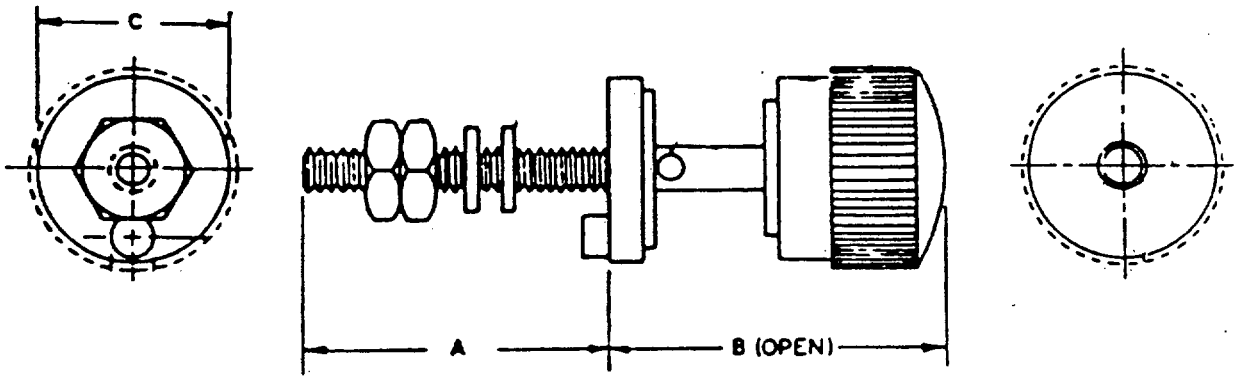

TYPE DESIGNATION	INSULATION COLOR	DIMENSIONS		
		A	B	C
PB02DC01	RED	1.125	1.250	0.687
PB02DC02	BLACK	1.125	1.250	0.687

POSTS, BINDING, ELECTRICAL (UNINSULATED), TYPES PB03KC01 AND PB03KC02

MIL-P-55159/3

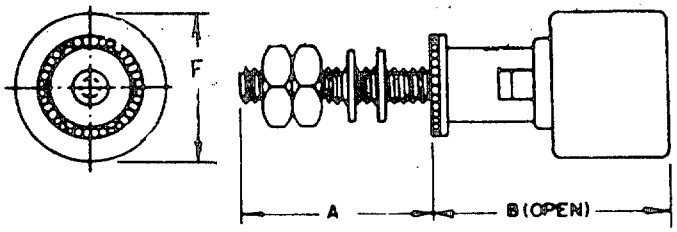

TYPE DESIGNATION	INSULATION COLOR	DIMENSIONS		
		A	B	F
PB03KC01	BLACK	0.562	0.734	0.500
PB03KC02	BLACK	0.812	0.172	0.625

POSTS, BINDING, ELECTRICAL (UNINSULATED), TYPE PB05NC01

MIL-P-55159/5

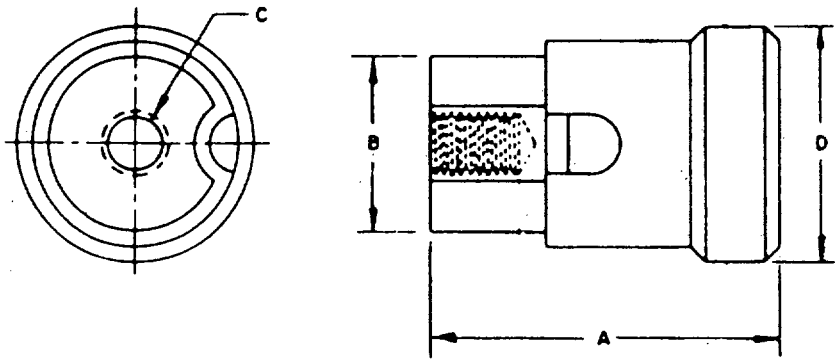

TYPE DESIGNATION	INSULATION COLOR	DIMENSIONS			
		A MAX	B	C	D
PB05NC01	BLACK	0.750	0.375	6-32 UNC-2B	0.500

POSTS, BINDING, ELECTRICAL (UNINSULATED), TYPE PB06NC01

MIL-P-55159/6

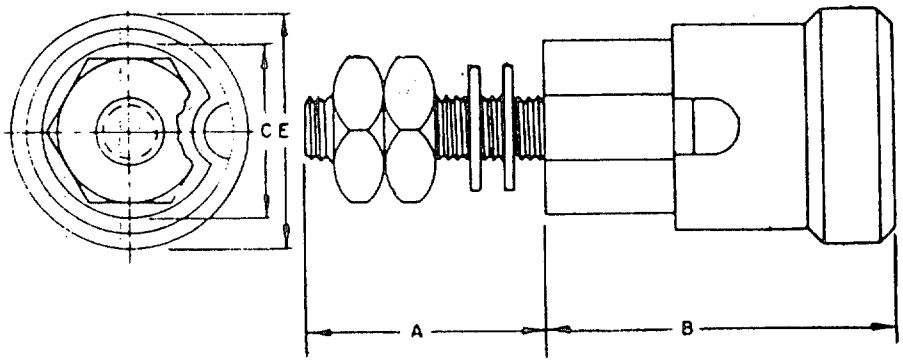

TYPE DESIGNATION	INSULATION COLOR	DIMENSIONS			
		A	B MAX	C	E
PB06NC01	BLACK	0.500	0.750	.375	0.500

POSTS, BINDING, ELECTRICAL (INSULATED), TYPE PB07FA01

MIL-P-55159/7

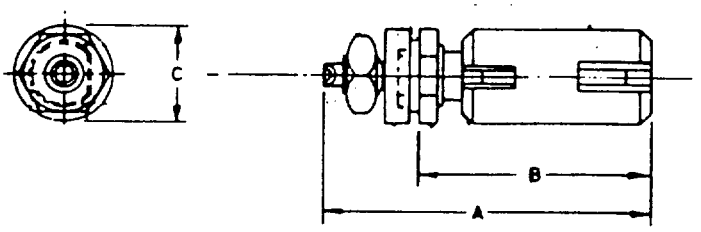

TYPE DESIGNATION	INSULATION COLOR	DIMENSIONS (MAX)		
		A	B	C
PB07FA01	OLIVE DRAB	1.612	1.072	.400

POSTS, BINDING, ELECTRICAL WATERPROOF (INSULATED), TYPES PB08NA01 AND PB08NA02

MIL-P-55159/8

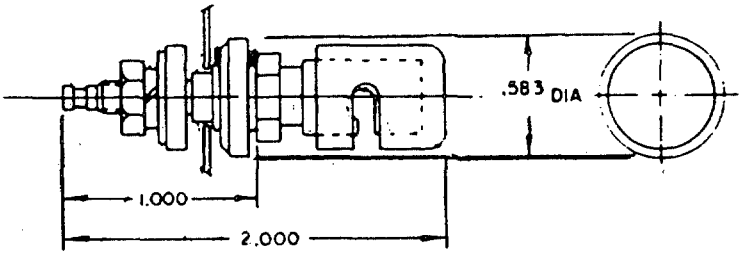

TYPE DESIGNATION	CAP COLOR	TYPE DESIGNATION	CAP COLOR
PB08NA01	BLACK	PB08NA02	RED

CLAMP, LOOP, CUSHION

MIL-C-85052

SCOPE: THIS SECTION COVERS TUBE SUPPORT LOOP CLAMPS. THESE CLAMPS ARE INTENDED FOR USE IN GENERAL CLAMPING OF FLUID AND ELECTRICAL AND RIGID TUBING. THE CLAMPS MAY BE USED WITHIN THE CUSHION TEMPERATURE 250°F OR 500°F.

PART NUMBER EXAMPLE: M85052/1-8

M85052	/1	8
MILITARY STANDARD		
	SLASH SHEET NUMBER	
		DASH NUMBER FROM TABLE I.

CLAMP, LOOP, TUBE-17-7 PH CRES, 275°F, FUEL AND PETROLEUM BASED HYDRAULIC FLUID RESISTANT

MIL-C-85052/1

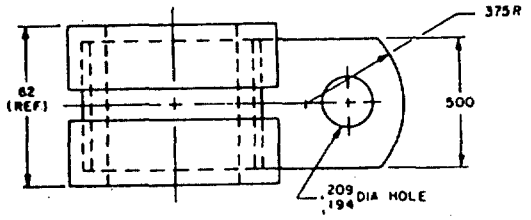

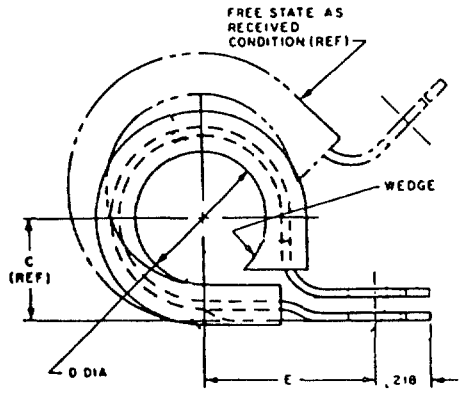

TABLE I. DIMENSIONS AND CHARACTERISTICS

PART NO. MIL-C-85052/1-	DIMENSIONS			PART NO. MIL-C-85052/1-	DIMENSIONS		
	C	D	E		C	D	E
2	.192	.125	.468				
3	.224	.188	.499	14	.580	.875	.898
4	.255	.250	.530	15	.611	.938	.929
5	.286	.312	.561	16	.642	1.000	.960
6	.318	.375	.592	17	.681	1.062	1.001
7	.349	.438	.624	18	.712	1.125	1.032
8	.380	.500	.655	19	.744	1.188	1.064
9	.423	.562	.741	20	.775	1.250	1.095
10	.454	.625	.772	21	.806	1.312	1.126
11	.486	.688	.804	22	.838	1.375	1.158
12	.517	.750	.835	23	.869	1.438	1.189
13	.548	.812	.866	24	.900	1.500	1.220

CLAMP, LOOP, TUBE-17-7 PH CRES, 275°F, PHOSPHATE ESTER FLUID RESISTANT

MIL-C-85052/2

TABLE I. SEE PAGE 451.2.

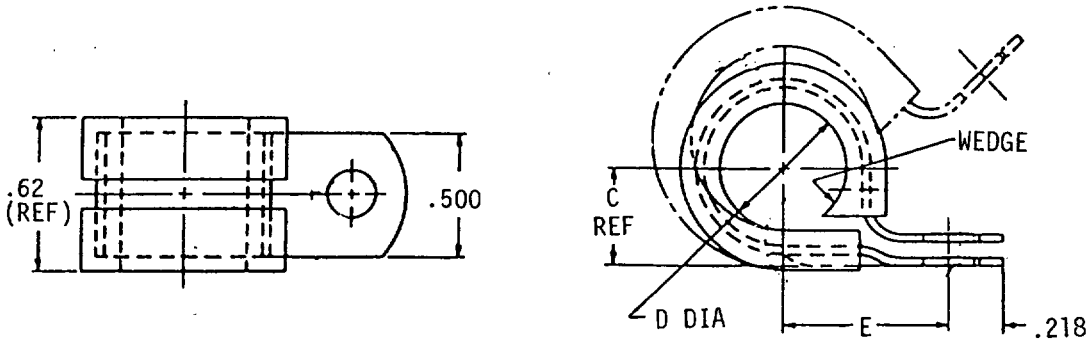

CLAMP, LOOP, TUBE-17-7 PH CRES, 500°F

MIL-C-85052/3

TABLE I. SEE PAGE 451.2.

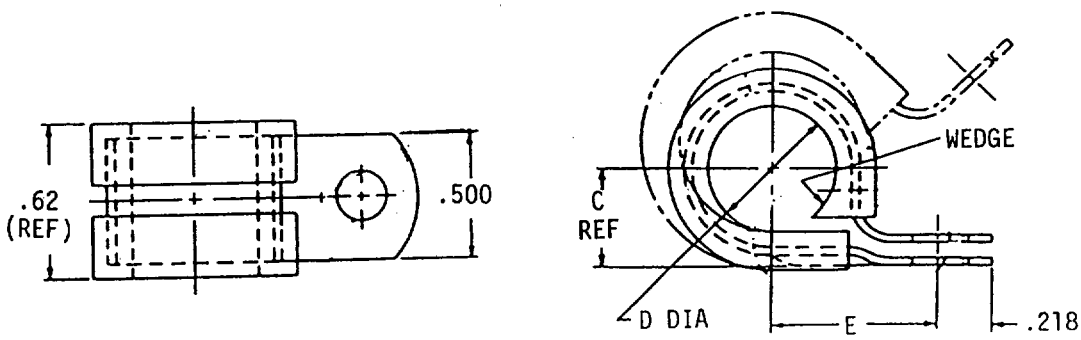

CLAMP SUPPORT - LOOP CLAMP

MIL-C-85052/4

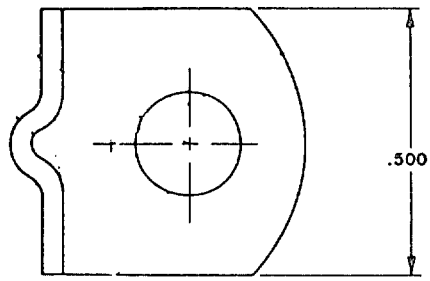

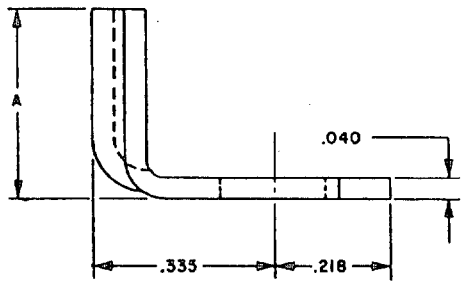

TABLE I. DIMENSIONS AND CHARACTERISTICS

PART NO. MIL-C-85052/4-	DIMENSION A
1012	.470
1416	.580
1820	.700
2224	.820

TERMINALS, FEEDTHRU (INSULATED) AND TERMINALS, STUD (INSULATED AND NONINSULATED)

MIL-T-55155

SCOPE: THIS SECTION COVERS INSULATED FEEDTHRU TERMINALS, AND INSULATED AND NONINSULATED STUD TERMINALS.

TYPE DESIGNATION: FT01 0 B 01 Z

STYLE — FT01

INSULATION COLOR — 0

MOUNTING — B

ITEM NUMBER — 01

CONDUCTOR MATERIAL — Z

INSULATION COLOR:
0 -- BLACK,
1 -- BROWN , 2 -- RED , 3 --ORANGE
4 -- YELLOW, 5 -- GREEN , 6 -- BLUE
7 -- VIOLET, 8 -- GRAY, 9 -- WHITE

TERMINAL, FEEDTHRU (INSULATED), STYLE FT01

MIL-T-55155/1

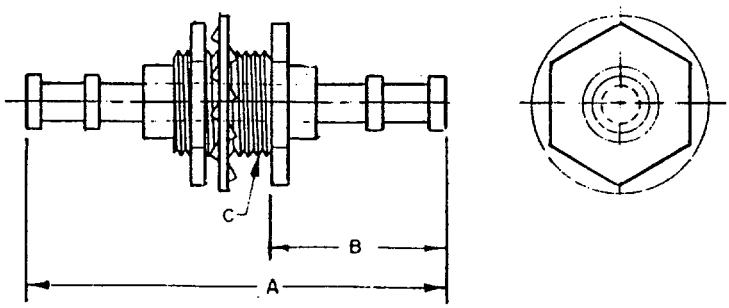

TYPE DESIGNATOR	DIELECTRIC WITHSTANDING VOLTAGE,ac(rms)	DIMENSIONS		
		A	B	C
FT01-A01	1250	.923	.367	1/4-28 UNF-2A
FT01-A02	1500	1.307	.536	3/8-32 UNEF-2A

TERMINALS, FEEDTHRU (INSULATED), STYLE FT02

MIL-T-55155/2

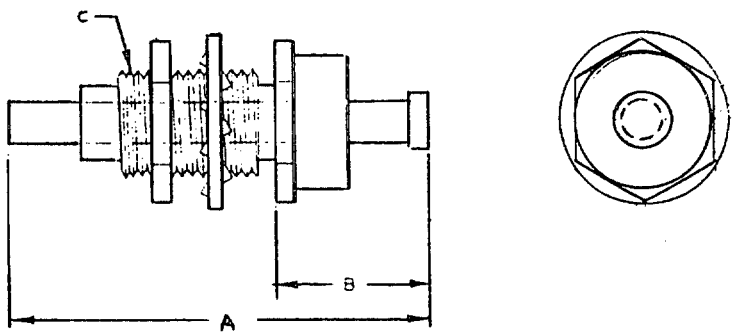

TYPE DESIGNATOR	DIELECTRIC WITHSTANDING VOLTAGE, ac(rms)	DIMENSIONS		
		A	B	C
FT02-A01	2000	.690	.287	12-28 UNF-2A

TERMINALS, FEEDTHRU (INSULATED), STYLE FT03

MIL-T-55155/3

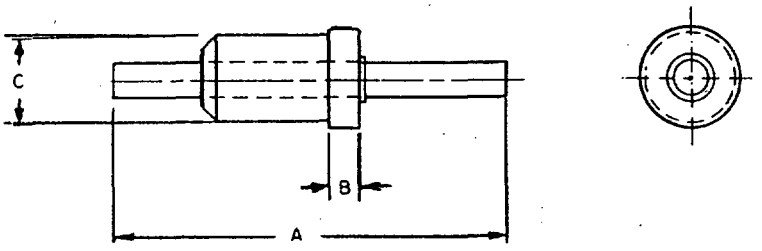

TYPE DESIGNATOR	DIELECTRIC WITHSTANDING VOLTAGE, ac(rms)	DIMENSIONS		
		A	B	C
FT03-B01	2000	.375	.040	.148
FT03-B02	2000	.515	.040	.148
FT03-B03	2500	.675	.125	.165
FT03-B04	1500	.515	.040	.093
FT03-B05	1500	.343	.040	.093

TERMINALS, FEEDTHRU (INSULATED), STYLE FT04

MIL-T-55155/4

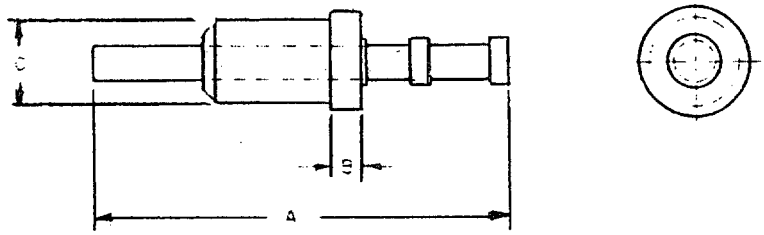

TYPE DESIGNATOR	DIELECTRIC WITHSTANDING VOLTAGE,ac(rms)	DIMENSIONS		
		A	B	C
FT04-B01	1500	.500	.040	.148
FT04-B02	3000	.836	.125	.148
FT04-B03	1500	.500	.040	.093

TERMINALS, STUD (NONINSULATED), STYLE SE11

MIL-T-55155/11

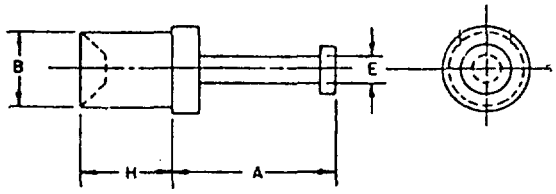

TYPE DESIGNATOR	DIMENSIONS			
	A	B	E	H
SE11XC01	.104	.072	.038	.082
SE11XC02				.113
SE11XC03				.145
SE11XC04	.094	.063	.045	.053
SE11XC05				.084
SE11XC06				.115
SE11XC07				.147
SE11XC08	.094	.042	.028	.037
SE11XC09				.053
SE11XC10				.084

TERMINALS, STUD (NONINSULATED), STYLE SE12

MIL-T-55155/12

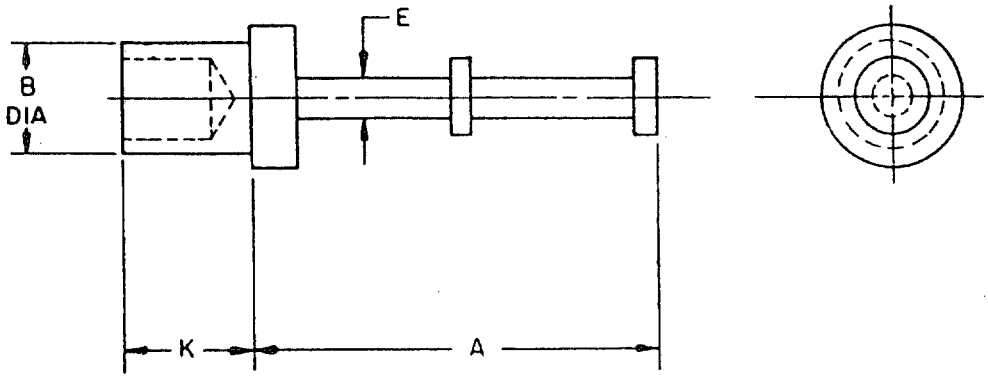

TYPE DESIGNATOR	DIMENSIONS			
	A	B	E	K
SE12XC01	.186	.072	.038	.082
SE12XC02				.113
SE12XC03				.145
SE12XC04	.237	.090	.047	.105
SE12XC05				.135
SE12XC06				.165
SE12XC07	.360	.112	.065	.109
SE12XC08				.141
SE12XC09				.172
SE12XC10	.156	.062	.031	.053
SE12XC11				.084
SE12XC12				.115
SE12XC13				.147
SE12XC14	.070	.032	.020	.053
SE12XC15				.084
SE12XC16				.115

TERMINALS, STUD (NONINSULATED), STYLE SE13

MIL-T-55155/13

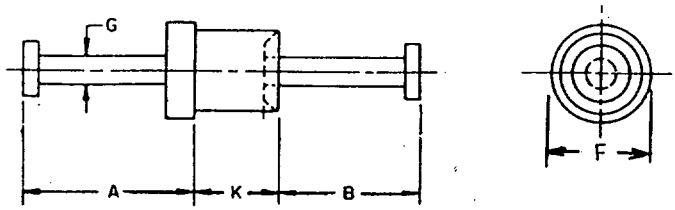

TYPE DESIGNATOR	DIMENSIONS				
	A	B	F	G	K
SE13XC01 SE13XC02 SE13XC03	.104	.082	.093	.038	.082 .113 .145
SE13XC04 SE13XC05 SE13XC06	.156	.125	.156	.040	.105 .135 .165

TERMINALS, STUD (NONINSULATED), STYLE SE14

MIL-T-55155/14

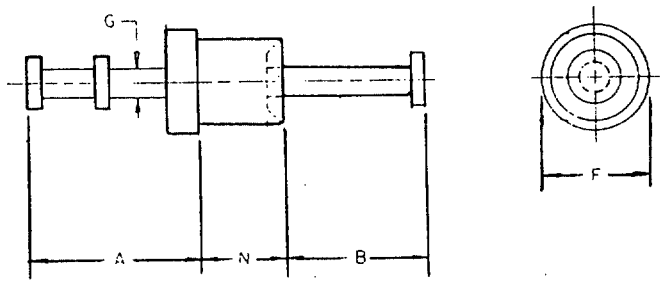

TYPE DESIGNATOR	DIMENSIONS				
	A	B	F	G	N
SE14XC01 SE14XC02 SE14XC03	.186	.082	.093	.038	.082 .113 .145
SE14XC04 SE14XC05 SE14XC06	.360	.109	.187	.065	.105 .135 .165

TERMINALS, STUD (NONINSULATED), STYLE SE15

MIL-T-55155/15

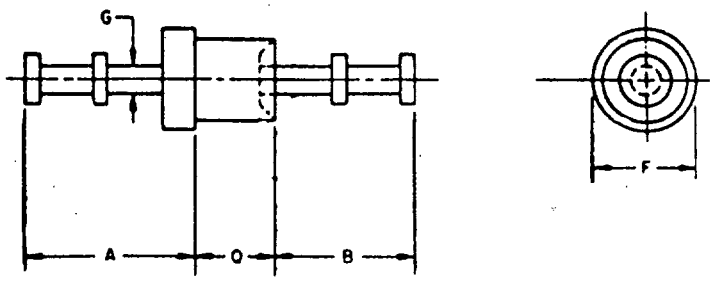

TYPE DESIGNATOR	DIMENSIONS				
	A	B	F	G	Q
SE15XC01	.186	.164	.093	.038	.082
SE15XC02					.113
SE15XC03					.145
SE15XC04	.237	.134	.156	.047	.105
SE15XC05					.135
SE15XC06					.165
SE15XC07	.343	.315	.250	.065	.093
SE15XC08					.125
SE15XC09					.156

TERMINALS, STUD (NONINSULATED), STYLE SE16

MIL-T-55155/16

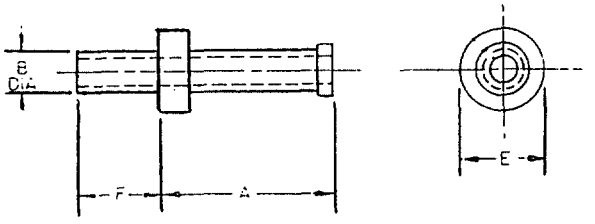

TYPE DESIGNATOR	DIMENSIONS			
	A	B	E	F
SE16XC01 SE16XC02 SE16XC03	.156	.062	.125	.084 .115 .147

TERMINALS, STUD (NONINSULATED), STYLE SE17

MIL-T-55155/17

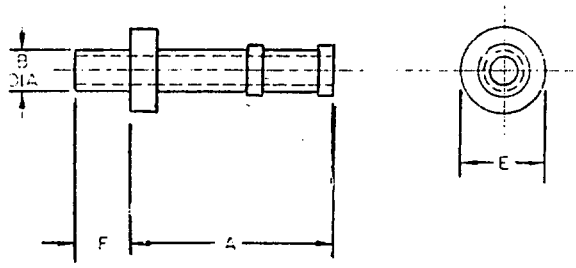

TYPE DESIGNATOR	DIMENSIONS			
	A	B	E	F
SE17XC01 SE17XC02 SE17XC03	.328	.112	.187	.109 .141 .172

503.7

TERMINALS, STUD (NONINSULATED), STYLE SE23

MIL-T-55155/23

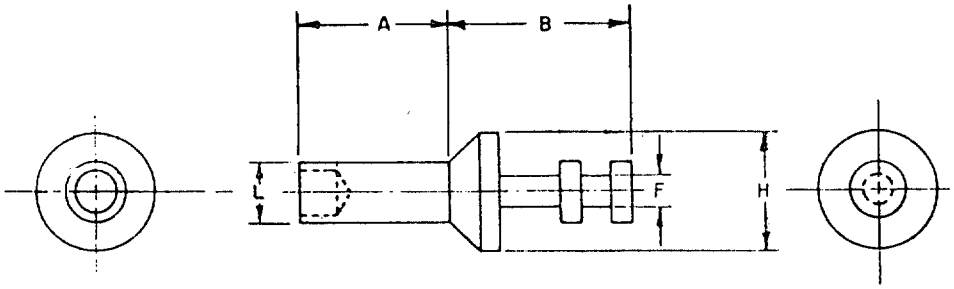

TYPE DESIGNATOR	DIMENSIONS				
	A	B	F	H	L
SE23XC01	.062	.188	.031	.125	.060
SE23XC02	.094				
SE23XC03	.125				
SE23XC04	.156				

TERMINALS, STUD (NONINSULATED), STYLE SE24

MIL-T-55155/24

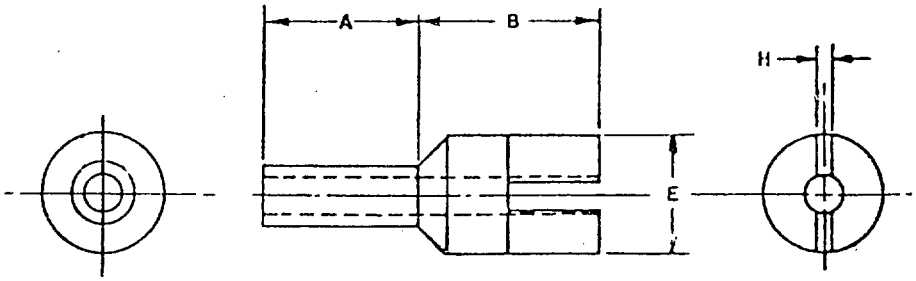

TYPE DESIGNATOR	DIMENSIONS			
	A	B	E	H
SE24XC01	.062	.188	.125	.060
SE24XC02	.094			
SE24XC03	.125			
SE24XC04	.156			
SE24XC05	.037	.125	.094	.063
SE24XC06	.053			
SE24XC07	.084			
SE24XC08	.115			
SE24XC09	.147			
SE24XC10	.037	.125	.062	.042
SE24XC11	.053			
SE24XC12	.084			
SE24XC13	.115			
SE24XC14	.147			
SE24XC15	.053	.070	.047	.032
SE24XC16	.084			
SE24XC17	.115			

TERMINALS, STUD (NONINSULATED), STYLE SE25

MIL-T-55155/25

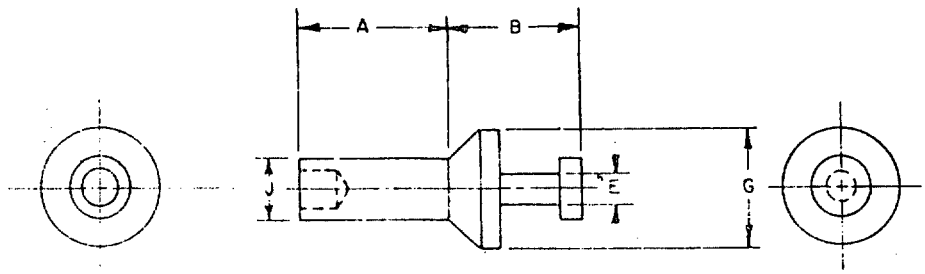

TYPE DESIGNATOR	DIMENSIONS				
	A	B	E	G	J
SE23XC01	.062	.136	.031	.125	.060
SE23XC02	.094				
SE23XC03	.125				
SE23XC04	.156				

TERMINALS, STUD (INSULATED), STYLE SE08

MIL-T-55155/8

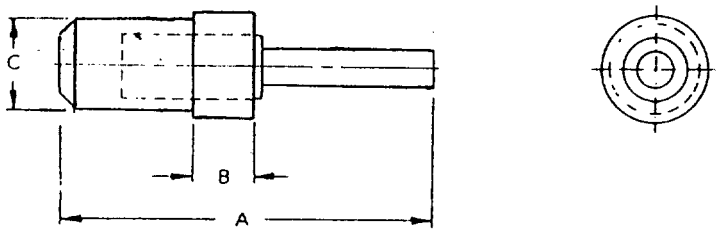

TYPE DESIGNATOR	WITHSTANDING VOLTAGE, ac(rms)	DIMENSIONS		
		A	B	C
SE08-B01	1500	.350	.040	.148
SE08-B02	1500	.350	.040	.093

TERMINALS, STUD (INSULATED), STYLE SE09

MIL-T-55155/9

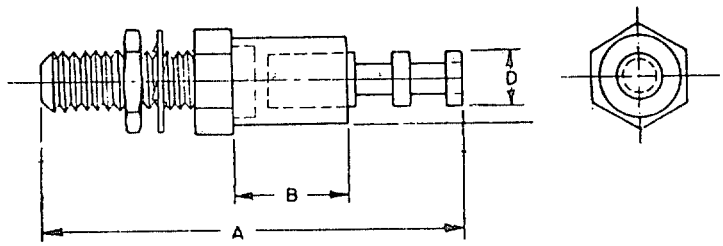

TYPE DESIGNATOR	DIELECTRIC WITHSTANDING VOLTAGE ac(rms)	DIMENSIONS		
		A	B	D
SE09-E01	3500	.750	.230	.066
SE09-E02	3300	.890	.156	.140
SE09-E03	3500	.688	.200	.090
SE09-E04		.750		
SE09-E05		.875		

TERMINALS, STUD (INSULATED), STYLE SE10

MIL-T-55155/10

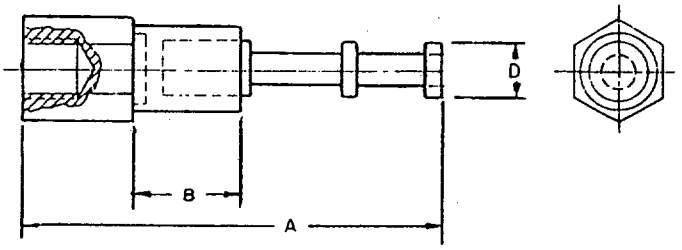

TYPE DESIGNATOR	DIELECTRIC WITHSTANDING VOLTAGE ac(rms)	DIMENSIONS		
		A	B	D
SE10-D01	3500	.546	.218	.066
SE10-D02	3300	.718	.156	.140

155

TERMINALS, STUD (INSULATED), STYLE SE18

MIL-T-55155/18

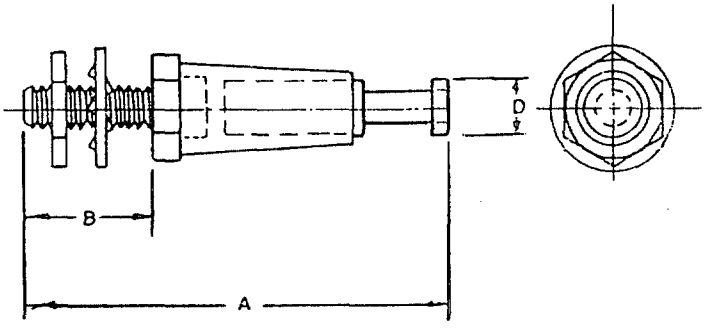

TYPE DESIGNATOR	DIELECTRIC WITHSTANDING VOLTAGE ac(rms)	DIMENSIONS		
		A	B	D
SE18-E01	2000	.593	.218	.093
SE18-E02	3000	.750	.218	.093

TERMINALS, STUD (INSULATED), STYLE SE19

MIL-T-55155/19

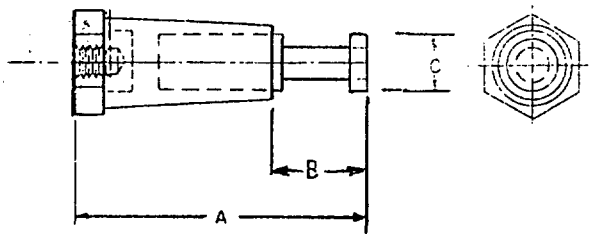

TYPE DESIGNATOR	DIELECTRIC WITHSTANDING VOLTAGE ac(rms)	DIMENSIONS		
		A	B	C
SE19-D01	3000	.593	.218	.140
SE19-D02	3000	.423	.156	.072
SE19-D03	3000	.593	.218	.140

157

TERMINALS, STUD (INSULATED), STYLE SE20

MIL-T-55155/20

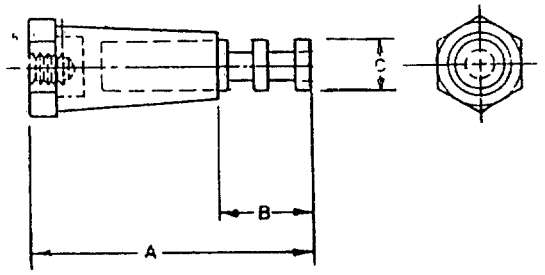

TYPE DESIGNATOR	DIELECTRIC WITHSTANDING VOLTAGE ac(rms)	DIMENSIONS		
		A	B	C
SE20-D01	3000	.718	.343	.140
SE20-D02	6000	.937	.343	.140
SE20-D03	3000	.390	.136	.072
SE20-D04	6000	.937	.343	.140

TERMINALS, STUD (INSULATED), STYLE SE21

MIL-T-55155/21

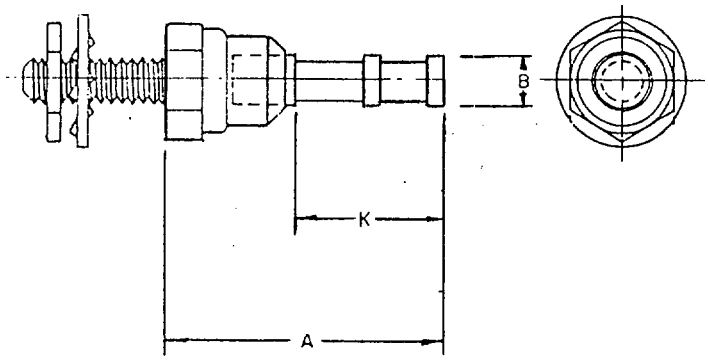

TYPE DESIGNATOR	DIELECTRIC WITHSTANDING VOLTAGE ac(rms)	DIMENSIONS		
		A	B	K
SE21-E01	1500	.531	.093	.196
SE21-E02	1500	.531		
SE21-E03	2000	.545		
SE21-E04	2000	.545		

TERMINALS, STUD (INSULATED), STYLE SE22

MIL-T-55155/22

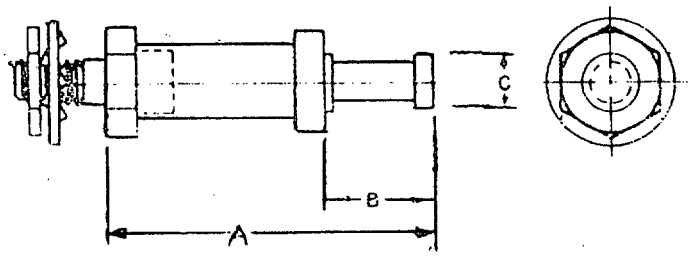

TYPE DESIGNATOR	DIELECTRIC WITHSTANDING VOLTAGE ac(rms)	DIMENSIONS		
		A	B	C
SE22-E01 SE22-E02 SE22-E03	1000	.398	.130	.082

TERMINAL BOARDS, MOLDED, BARRIER, SCREW AND STUD TYPES

MIL-T-55164

SCOPE: THIS SECTION COVERS THE GENERAL REQUIREMENTS FOR ONE-PIECE, MOLDED, BARRIER, FRONT- AND THROUGH CONNECTION, SCREW- AND STUD-TYPE TERMINAL BOARDS USED FOR CONNECTIONS IN ELECTRICAL AND ELECTRONIC CIRCUITS. THE SCREW-TYPE BOARDS HAVE MOLDED-IN METAL TERMINAL PLATES; AND THE STUD-TYPE BOARDS HAVE MOLDED-IN STUDS AND INSERTS. THESE TERMINAL BOARDS HAVE VOLTAGE AND CURRENT RATINGS AS SPECIFIED IN TABLE I. THIS SECTION ALSO COVERS THE GENERAL REQUIREMENTS FOR TERMINAL-BOARD LUGS FOR USE WITH SCREW-TYPE BOARDS AND STUD CONNECTORS FOR USE WITH STUD-TYPE BOARDS.

TYPE DESIGNATION OF TERMINAL BOARDS: 27TB 12 HT

CLASS

NO. OF TERMINALS

HT - HIGH TEMPERATURE (WHEN APPLICABLE)

TYPE DESIGNATION OF TERMINAL BOARDS LUGS: TBLD 37

STYLE

IDENTIFICATION NO.

161

TERMINAL BOARDS, MOLDED, BARRIER,

STUD TYPE, CLASS 3TB

MIL-T-55164/09

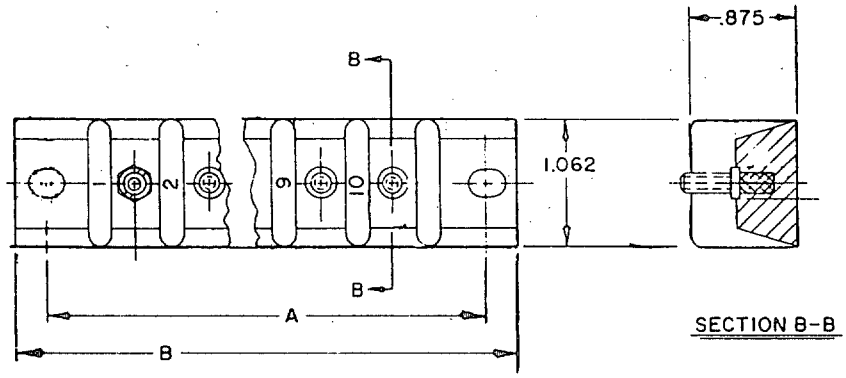

TYPE DESIGNATION	DIMENSIONS		RECOMMENDED WIRE TERMINAL LUGS	
	A	B	MIL-E-16366	MS-17143 (DASH NO.)
3TB10	6.875	7.375		-1 -2 -3

VOLTAGE RATING (MAXIMUM): 600 VOLTS
CURRENT RATING: 45 AMPS.

TERMINAL BOARDS, MOLDED, BARRIER,

STUD TYPE, CLASS 4TB

MIL-T-55164/10

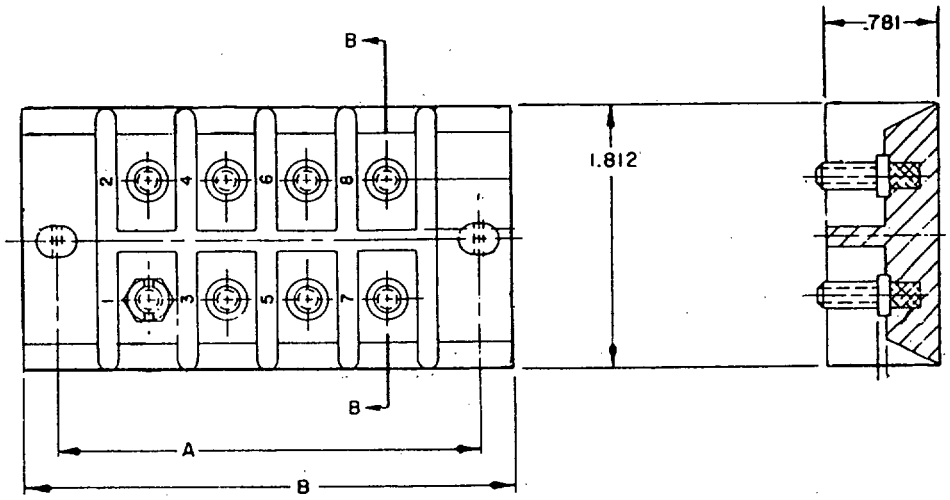

SECTION B-B

TYPE DESIGNATION	DIMENSIONS		RECOMMENDED WIRE TERMINAL LUGS	
	A	B	MIL-E-16366	MS-17143 (DASH NO.)
4TB8	2.875	3.375	L-80	-1
4TB20	6.000	6.500		-2
				-3

VOLTAGE RATING (MAXIMUM): 600 VOLTS
CURRENT RATING: 40 AMPS.

TERMINAL BOARDS, MOLDED, BARRIER,

STUD TYPE, CLASS 5TB

MIL-T-55164/11

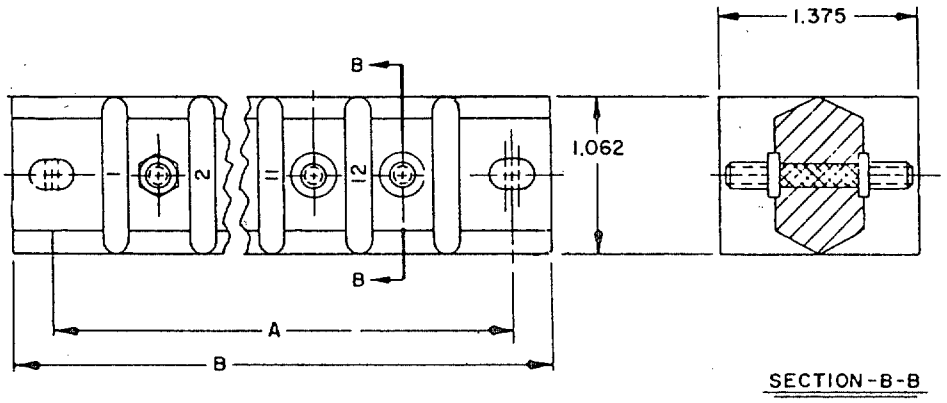

TYPE DESIGNATION	DIMENSIONS		RECOMMENDED WIRE TERMINAL LUGS	
	A	B	MIL-E-16366	MS-17143 (DASH NO.)
5TB8	5.625	6.125	L-80	-1
5TB10	6.875	7.375		-2
5TB12	8.000	8.500		-3

VOLTAGE RATING (MAXIMUM): 600 VOLTS
CURRENT RATING: 50 AMPS.

TERMINAL BOARDS, MOLDED, BARRIER,

STUD TYPE, CLASS 6TB

MIL-T-55164/12

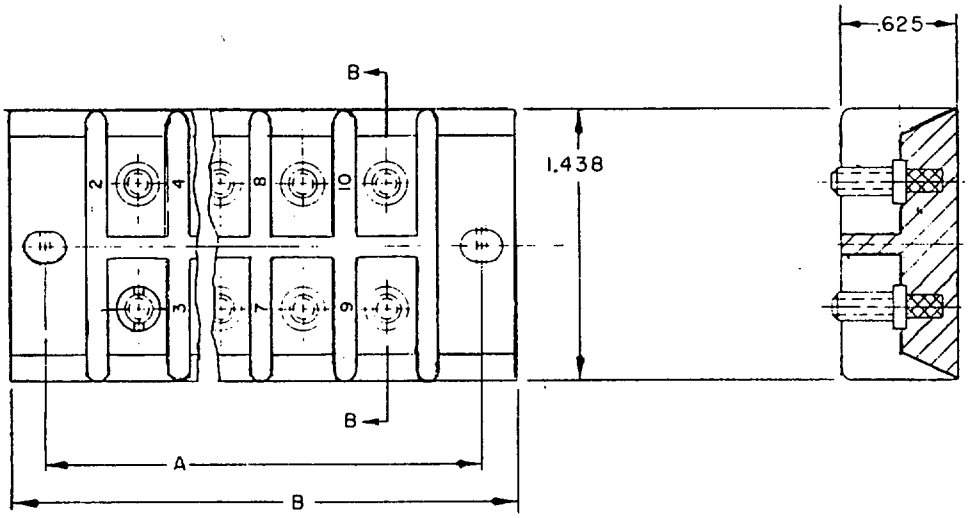

SECTION B-B

TYPE DESIGNATION	DIMENSIONS		RECOMMENDED WIRE TERMINAL LUGS	
	A	B	MIL-E-16366	MS-17143 (DASH NO.)
6TB6	2.000	2.500		-4
6TB10	2.875	3.375	L-81	-5
6TB24	6.000	6.500		-6

VOLTAGE RATING (MAXIMUM): 600 VOLTS
CURRENT RATING: 30 AMPS.

TERMINAL BOARDS, MOLDED, BARRIER,

STUD TYPE, CLASS 7TB

MIL-T-55164/13

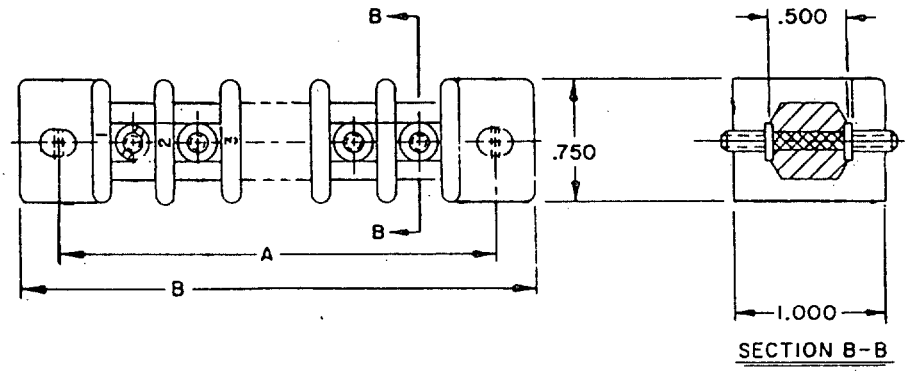

TYPE DESIGNATION	DIMENSIONS		RECOMMENDED WIRE TERMINAL LUGS	
	A	B	MIL-E-16366	MS-17143 (DASH NO.)
7TB8 7TB12	4.125 6.000	4.625 6.500	L-81	-4 -5 -6

VOLTAGE RATING (MAXIMUM): 600 VOLTS
CURRENT RATING: 40 AMPS.

TERMINAL BOARDS, MOLDED, BARRIER,

STUD TYPE, CLASSES 8TB AND 8TBHT

MIL-T-55164/14

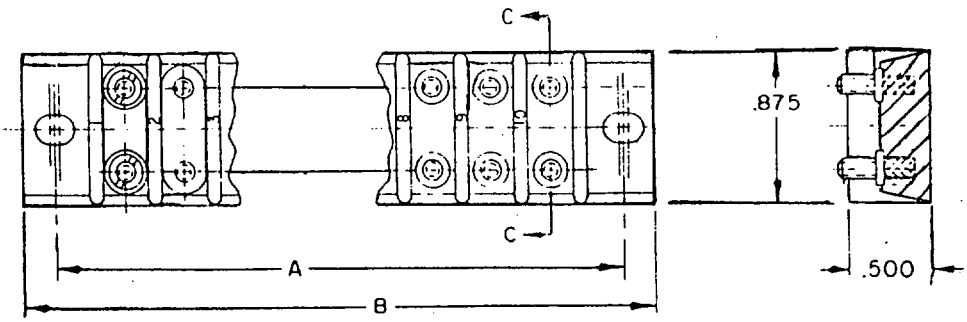

SECTION-C-C

TYPE DESIGNATION	DIMENSIONS		RECOMMENDED WIRE TERMINAL LUGS		MAXIMUN NUMBER OF TERMINAL LUGS FOR EACH STUD
	A	B	MIL-E-16366	MS-17143 (DASH NO.)	
8TB2 8TB2HT	1.250	1.625	L-83	-10 -11 -12	2
8TB6 8TB6HT	2.750	3.125			
8TB8 8TB8HT	3.500	3.875			
8TB10 8TB10HT	4.250	4.625			

VOLTAGE RATING (MAXIMUM): 300 VOLTS
CURRENT RATING: 30 AMPS.

TERMINAL BOARDS, MOLDED, BARRIER,

STUD TYPE, CLASS 9TB

MIL-T-55164/15

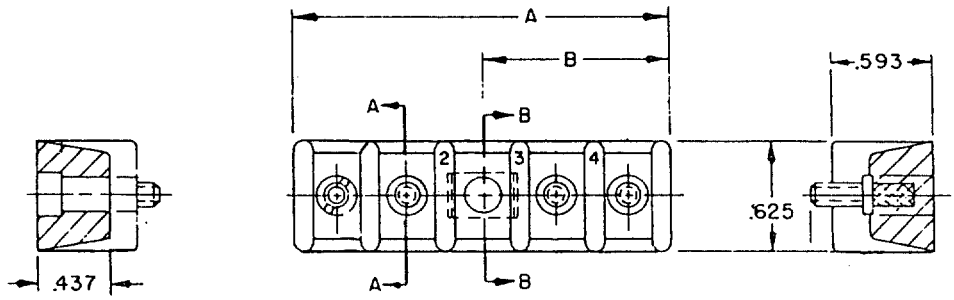

SECTION-B-B- REF

SECTION-A-A

TYPE DESIGNATION	DIMENSIONS		RECOMMENDED WIRE TERMINAL LUGS	
	A	B	MIL-E-16366	MS-17143 (DASH NO.)
9TB2	1.469	0.734		-4
9TB4	2.375	1.188	L-81	-5
				-6

VOLTAGE RATING (MAXIMUM): 300 VOLTS
CURRENT RATING: 35 AMPS.

TERMINAL BOARDS, MOLDED, BARRIER,

STUD TYPE, CLASS 10TB

MIL-T-55164/16

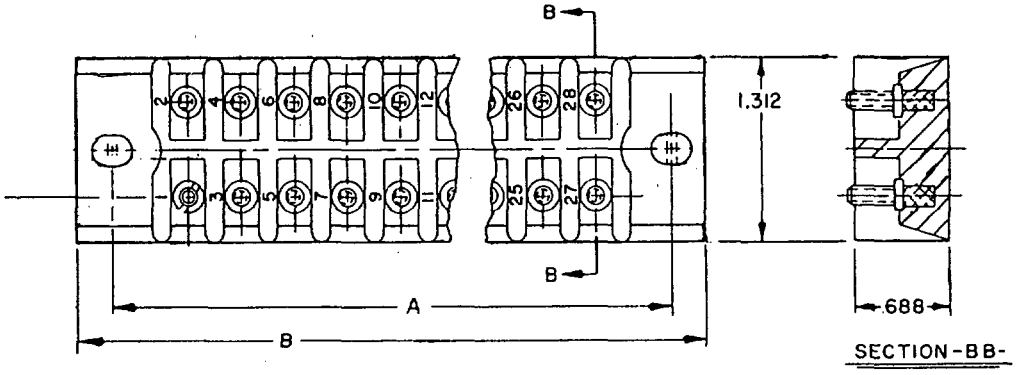

TYPE DESIGNATION	DIMENSIONS		RECOMMENDED WIRE TERMINAL LUGS	
	A	B	MIL-E-16366	MS-17143 (DASH NO.)
10TB8	2.000	2.500		-13
10TB12	2.875	3.375	L-84	-14
10TB18	4.125	4.625		-15
10TB28	6.000	6.500		

VOLTAGE RATING (MAXIMUM): 600 VOLTS
CURRENT RATING: 30 AMPS.

TERMINAL BOARDS, MOLDED, BARRIER,

STUD TYPE, CLASS 11TB

MIL-T-55164/17

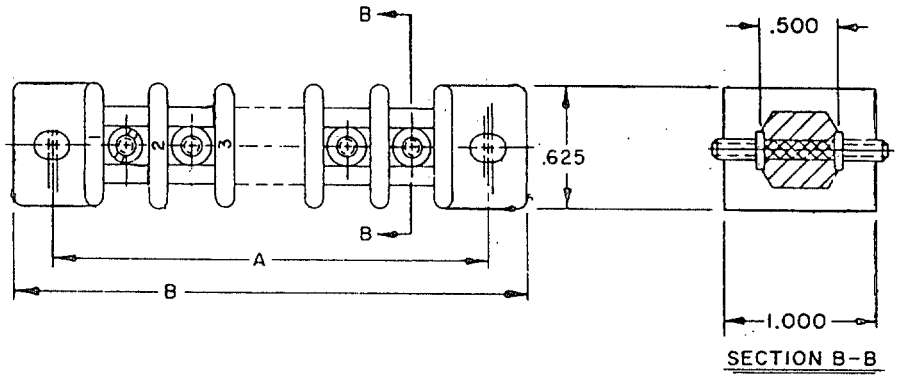

TYPE DESIGNATION	DIMENSIONS		RECOMMENDED WIRE TERMINAL LUGS	
	A	B	MIL-E-16366	MS-17143 (DASH NO.)
11TB4	2.000	2.500	L-84	-13
11TB6	2.875	3.375		-14
11TB9	4.125	4.625		-15
11TB14	6.000	6.500		

VOLTAGE RATING (MAXIMUM): 600 VOLTS
CURRENT RATING: 40 AMPS.

TERMINAL BOARDS, MOLDED, BARRIER,

STUD TYPE, CLASS 13TB

MIL-T-55164/18

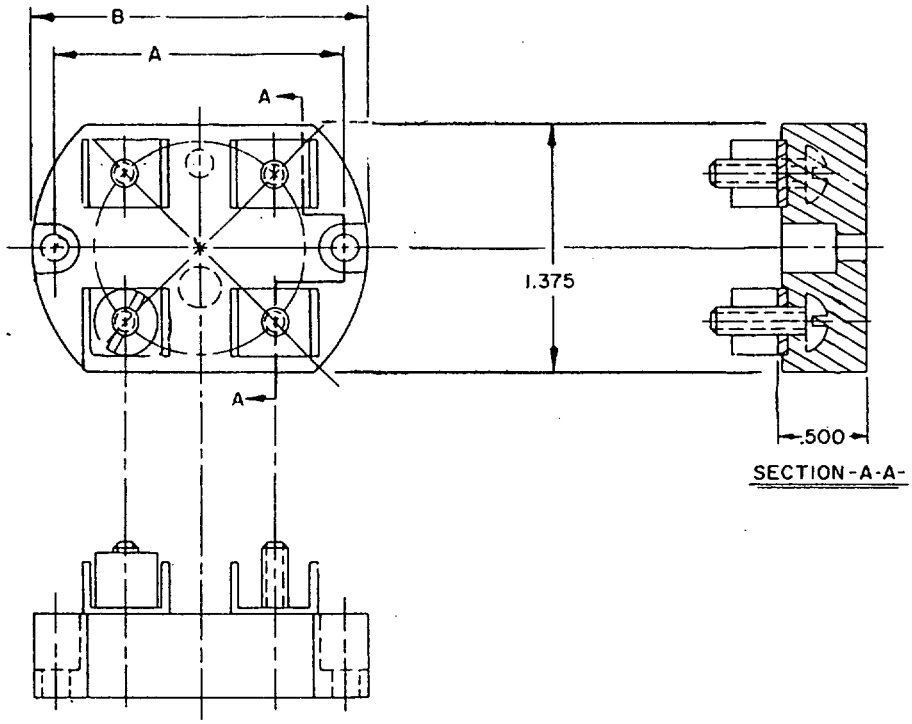

TYPE DESIGNATION	DIMENSIONS		RECOMMENDED WIRE TERMINAL LUGS	
	A	B	MIL-E-16366	MS-17143 (DASH NO.)
13TB4	1.625	1.875	L-80	-1 -2 -3

VOLTAGE RATING (MAXIMUM): 150 VOLTS
CURRENT RATING: 15 AMPS.

171

TERMINAL BOARDS, MOLDED, BARRIER,

STUD TYPE, CLASS 15TB

MIL-T-55164/19

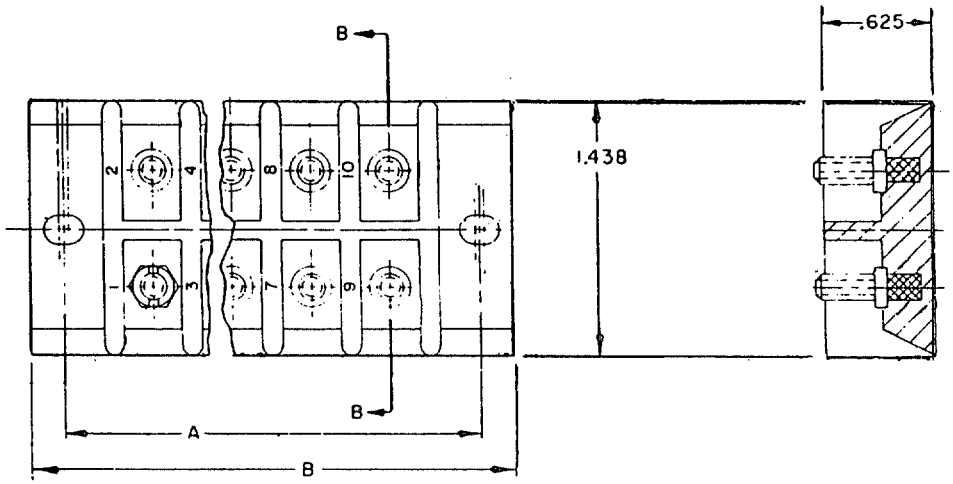

SECTION B-B

TYPE DESIGNATION	DIMENSIONS		RECOMMENDED WIRE TERMINAL LUGS	
	A	B	MIL-E-16366	MS-17143 (DASH NO.)
15TB10	2.875	3.375		-7
15TB24	6.000	6.500	L-82	-8
				-9

VOLTAGE RATING (MAXIMUM): 600 VOLTS
CURRENT RATING: 30 AMPS.

TERMINAL BOARDS, MOLDED, BARRIER,

STUD TYPE, CLASS 16TB

MIL-T-55164/20

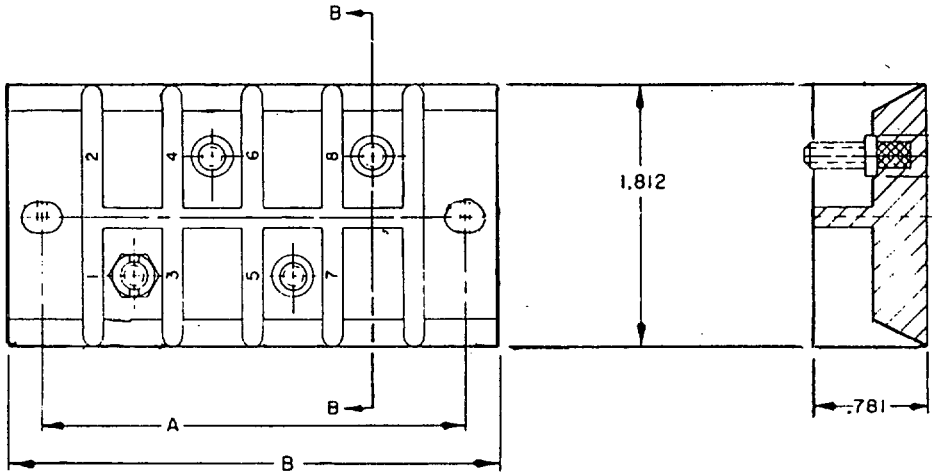

SECTION B-B

TYPE DESIGNATION	DIMENSIONS		RECOMMENDED WIRE TERMINAL LUGS	
	A	B	MIL-E-16366	MS-17143 (DASH NO.)
16TB4	2.875	3.375		-1
16TB10	6.000	6.500	L-80	-2
				-3

VOLTAGE RATING (MAXIMUM): 1000 VOLTS
CURRENT RATING: 40 AMPS.

173

TERMINAL BOARDS, MOLDED, BARRIER,

STUD TYPE, CLASS 17TB

MIL-T-55164/21

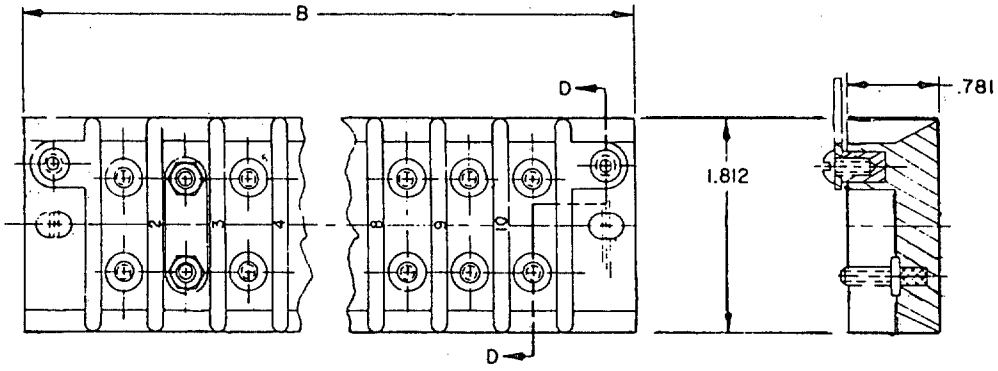

TYPE DESIGNATION	DIMENSION B	RECOMMENDED WIRE TERMINAL LUGS	
		MIL-E-16366	MS-17143 (DASH NO.)
17TB4	3.375		-1
17TB10	6.500	L-80	-2
			-3

VOLTAGE RATING (MAXIMUM): 600 VOLTS
CURRENT RATING: 40 AMPS.

TERMINAL BOARDS, MOLDED, BARRIER,

STUD TYPE, CLASS 18TB

MIL-T-55164/22

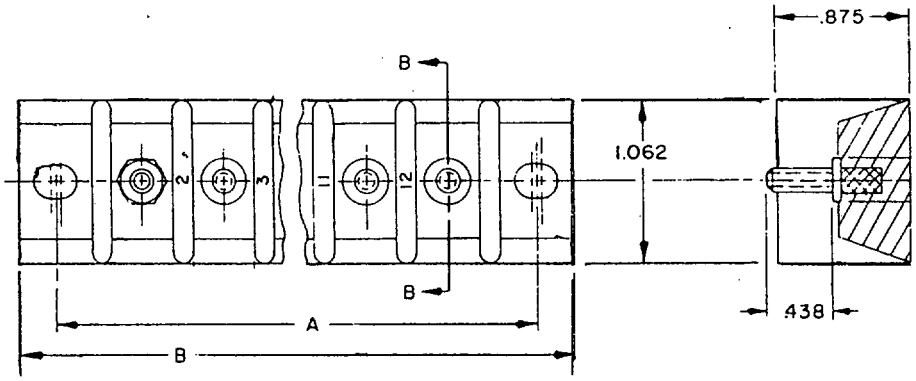

SECTION B-B

TYPE DESIGNATION	DIMENSIONS		RECOMMENDED WIRE TERMINAL LUGS	
	A	B	MIL-E-16366	MS-17143 (DASH NO.)
18TB12	7.000	7.500	L-80	-1 -2 -3

VOLTAGE RATING (MAXIMUM): 600 VOLTS
CURRENT RATING: 45 AMPS.

TERMINAL BOARDS, MOLDED, BARRIER,

STUD TYPE, CLASSES 25TB AND 25TBHT

MIL-T-55164/23

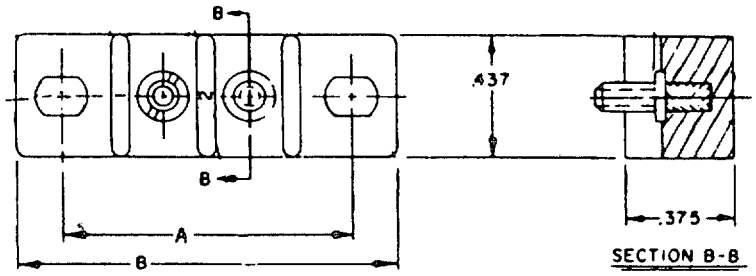

TYPE DESIGNATION	DIMENSIONS		RECOMMENDED WIRE TERMINAL LUGS	
	A	B	MIL-E-16366	MS-17143 (DASH NO.)
25TB2 25TB2HT	1.062	1.375		
25TB5 25TB5HT	2.000	2.312		
25TB6 25TB6HT	2.312	2.625		
25TB7 25TB7HT	2.625	2.938		-16 -17 -18
25TB9 25TB9HT	3.250	3.562		
25TB10 25TB10HT	3.562	3.875		
25TB12 25TB12HT	4.188	4.500		

VOLTAGE RATING (MAXIMUM): 300 VOLTS
CURRENT RATING: 25 AMPS.

TERMINAL BOARDS, MOLDED, BARRIER,

STUD TYPE, CLASSES 26TB AND 26TBHT

MIL-T-55164/24

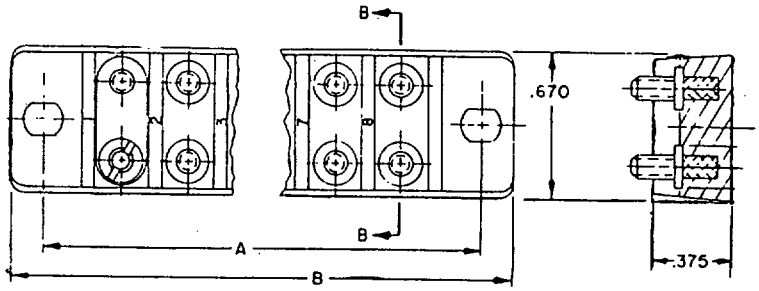

TYPE DESIGNATION	DIMENSIONS		RECOMMENDED WIRE TERMINAL LUGS	
	A	B	MIL-E-16366	MS-17143 (DASH NO.)
26TB2 26TB2HT	1.062	1.375		
26TB6 26TB6HT	2.312	2.625		
26TB8 26TB8HT	2.938	3.250		-19 -20 -21
26TB10 26TB10HT	3.562	3.875		
26TB12 26TB12HT	4.188	4.500		

VOLTAGE RATING (MAXIMUM): 300 VOLTS
CURRENT RATING: 20 AMPS.

TERMINAL BOARDS, MOLDED, BARRIER,

STUD TYPE, CLASSES 27TB AND 27TBHT

MIL-T-55164/25

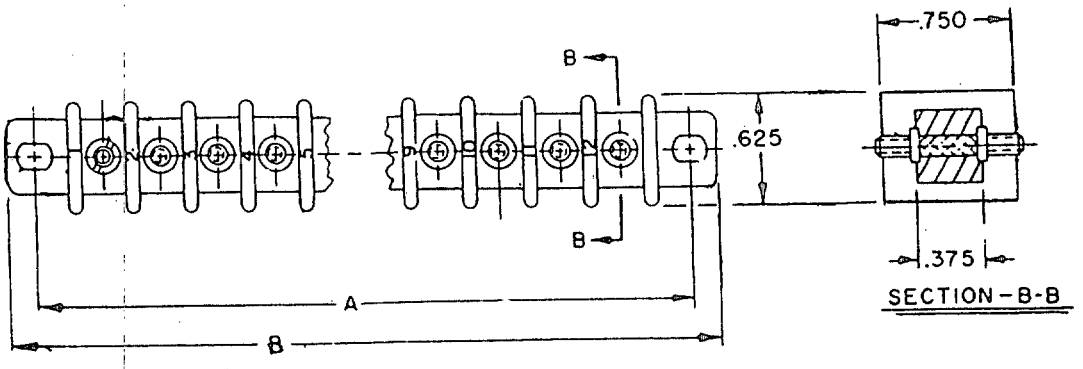

TYPE DESIGNATION	DIMENSIONS		RECOMMENDED WIRE TERMINAL LUGS	
	A	B	MIL-E-16366	MS-17143 (DASH NO.)
27TB12 27TB12HT	4.188	4.500		-16 -17 -18

VOLTAGE RATING (MAXIMUM): 300 VOLTS
CURRENT RATING: 30 AMPS.

TERMINAL BOARDS, MOLDED, BARRIER,

SCREW TYPE,CLASS 37TB

MIL-T-55164/1

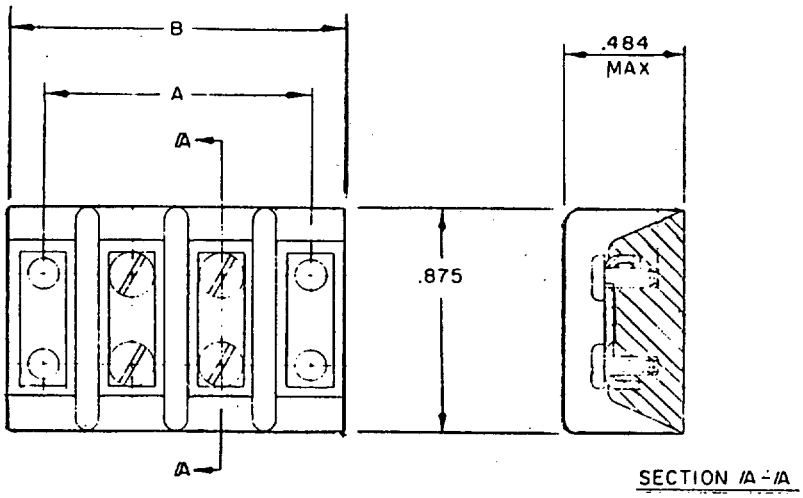

TYPE DESIGNATION	DIMENSIONS		TERMINAL BOARD LUGS
	A	B	
37TB2	1.125	1.422	
37TB3	1.500	1.797	
37TB4	1.875	2.172	
37TB5	2.250	2.562	
37TB6	2.625	2.938	
37TB7	3.000	3.312	TBLD37
37TB8	3.375	3.688	TBLS37
37TB9	3.766	4.062	
37TB10	4.141	4.438	
37TB12	4.891	5.188	
37TB14	5.641	5.938	
37TB16	6.391	6.688	
37TB18	7.141	7.438	
37TB20	7.906	8.203	

VOLTAGE RATING (MAXIMUM): 300 VOLTS
CURRENT RATING: 15 AMPS.

179

TERMINAL BOARDS, MOLDED, BARRIER,

SCREW TYPE,CLASS 38TB

MIL-T-55164/2

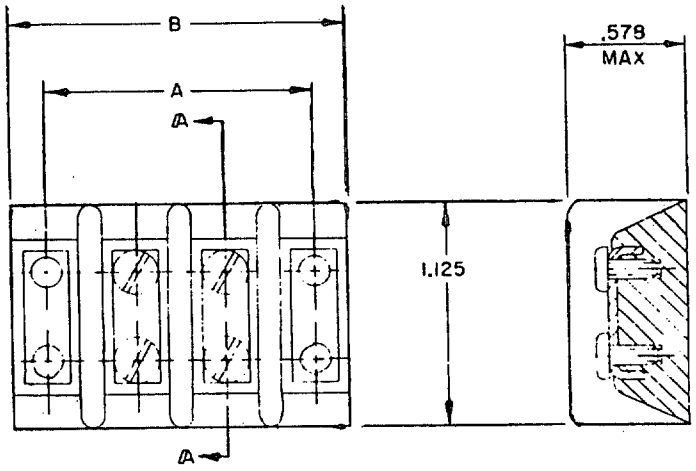

TYPE DESIGNATION	DIMENSIONS A	DIMENSIONS B	TERMINAL BOARD LUGS
38TB2	1.312	1.641	TBLD38 TBLS38
38TB3	1.750	2.078	
38TB4	2.188	2.516	
38TB5	2.625	2.953	
38TB6	3.062	3.391	
38TB7	3.500	3.828	
38TB8	3.953	4.266	
38TB9	4.391	4.703	
38TB10	4.828	5.141	
38TB12	5.703	6.031	
38TB14	6.578	6.906	
38TB16	7.453	7.781	
38TB18	8.328	8.656	
38TB20	9.219	9.547	

VOLTAGE RATING (MAXIMUM): 600 VOLTS
CURRENT RATING: 20.0 AMPS

TERMINAL BOARDS, MOLDED, BARRIER,

SCREW TYPE,CLASS 39TB

MIL-T-55164/3

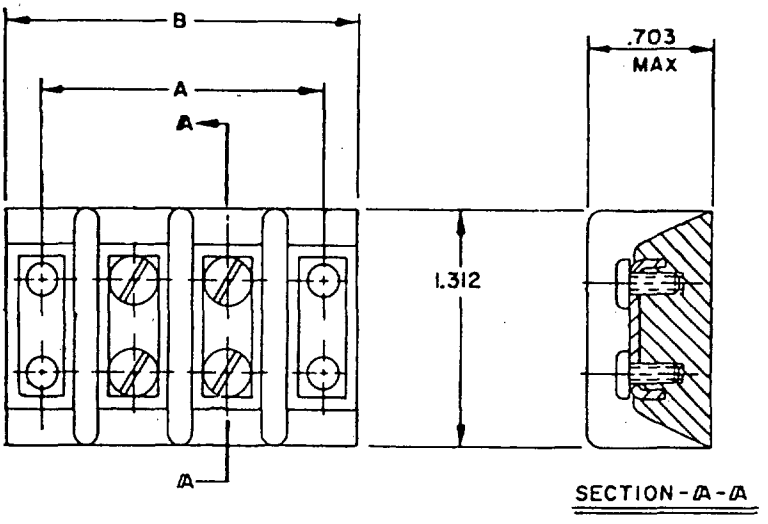

TYPE DESIGNATION	DIMENSIONS		TERMINAL BOARD LUGS
	A	B	
39TB2	1.688	2.109	
39TB3	2.250	2.688	
39TB4	2.812	3.250	
39TB5	3.375	3.812	
39TB6	3.938	4.375	
39TB7	4.500	4.938	
39TB8	5.062	5.500	TBLD39
39TB9	5.641	6.062	TBLS39
39TB10	6.203	6.625	
39TB12	7.328	7.750	
39TB14	8.453	8.875	
39TB16	9.578	10.000	
39TB18	10.703	11.141	

VOLTAGE RATING (MAXIMUM): 600 VOLTS
CURRENT RATING: 30 AMPS

181

TERMINAL BOARDS, MOLDED, BARRIER,

SCREW TYPE,CLASS 40TB

MIL-T-55164/4

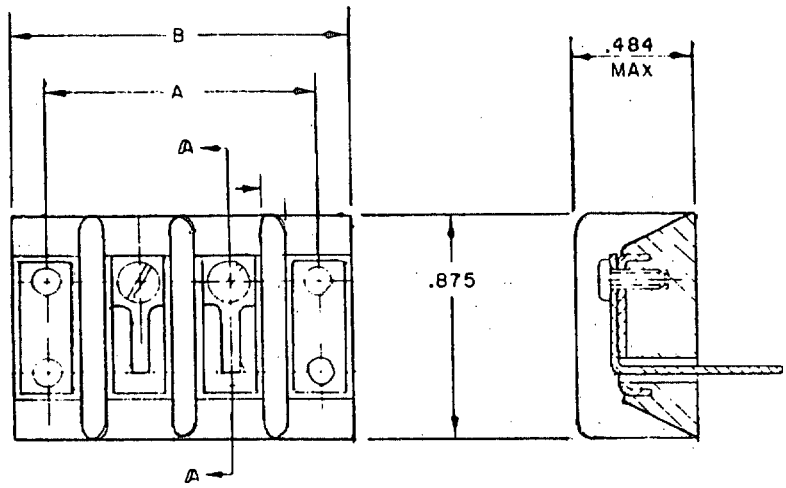

SECTION A-A

TYPE DESIGNATION	DIMENSIONS	
	A	B
40TB2	1.125	1.422
40TB3	1.500	1.797
40TB4	1.875	2.172
40TB5	2.250	2.562
40TB6	2.625	2.938
40TB7	3.000	3.312
40TB8	3.375	3.688
40TB9	3.766	4.062
40TB10	4.141	4.438
40TB12	4.891	5.188
40TB14	5.641	5.938
40TB15	6.016	6.312
40TB16	6.391	6.688
40TB18	7.141	7.438
40TB20	7.906	8.203

VOLTAGE RATING (MAXIMUM): 300 VOLTS
CURRENT RATING: 7.5 AMPS

TERMINAL BOARDS, MOLDED, BARRIER,

SCREW TYPE,CLASS 41TB

MIL-T-55164/5

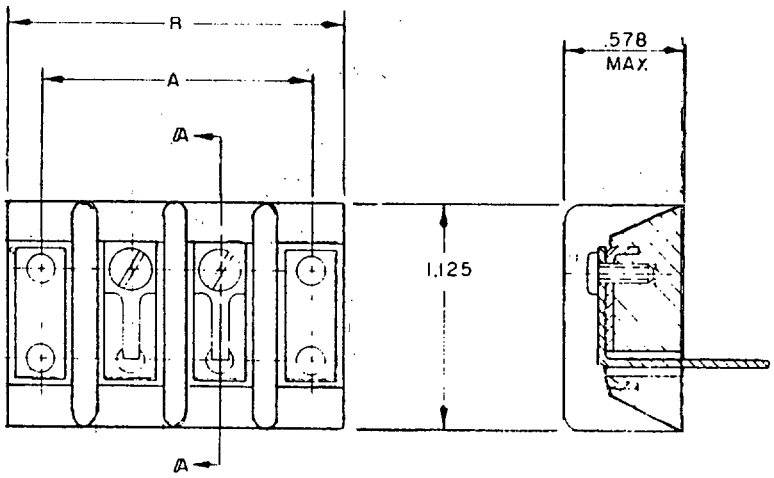

SECTION A-A

TYPE DESIGNATION	DIMENSIONS	
	A	B
41TB2	1.312	1.641
41TB3	1.750	2.078
41TB4	2.188	2.516
41TB5	2.625	2.953
41TB6	3.062	3.391
41TB7	3.500	3.828
41TB8	3.953	4.266
41TB9	4.391	4.703
41TB10	4.828	5.141
41TB12	5.703	6.031
41TB14	6.578	6.906
41TB16	7.453	7.781
41TB18	8.328	8.656
41TB20	9.219	9.547

VOLTAGE RATING (MAXIMUM): 600 VOLTS
CURRENT RATING: 10 AMPS

TERMINAL BOARDS, MOLDED, BARRIER
SCREW TYPE, CLASS 43TB

MIL-T-55164/26

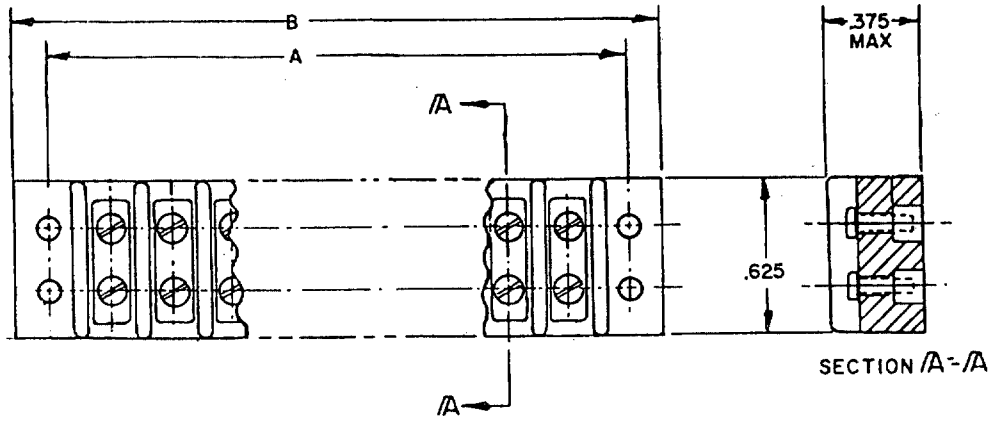

TYPE DESIGNATION	DIMENSIONS		TERMINAL BOARD LUGS
	A	B	
43TB2	.750	1.000	TBLD43 TBLS43
43TB3	1.000	1.250	
43TB4	1.250	1.500	
43TB5	1.500	1.750	
43TB6	1.750	2.000	
43TB7	2.000	2.250	
43TB8	2.250	2.500	
43TB9	2.500	2.750	
43TB10	2.750	3.000	
43TB11	3.000	3.250	
43TB12	3.250	3.500	
43TB14	3.750	4.000	
43TB16	4.250	4.500	
43TB18	4.750	5.000	
43TB20	5.250	5.500	
43TB22	5.750	6.000	

VOLTAGE RATING (MAXIMUM): 150 VOLTS
CURRENT RATING: 5 AMPS

TERMINAL BOARDS, MOLDED, BARRIER
SCREW TYPE, CLASS 44TB

MIL-T-55164/27

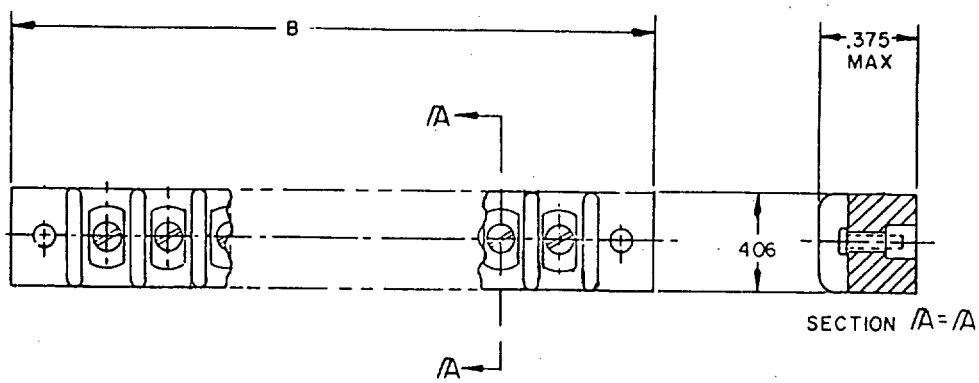

TYPE DESIGNATION	DIMENSION B	TERMINAL BOARD LUGS
44TB1	.750	
44TB2	1.000	
44TB3	1.250	
44TB4	1.500	
44TB5	1.750	
44TB6	2.000	
44TB7	2.250	
44TB8	2.500	
44TB9	2.750	
44TB10	3.000	
44TB11	3.250	TBLD44
44TB12	3.500	TBLS44
44TB13	3.750	
44TB14	4.000	
44TB15	4.250	
44TB16	4.500	
44TB17	4.750	
44TB18	5.000	
44TB19	5.250	
44TB20	5.500	
44TB21	5.750	
44TB22	6.000	

VOLTAGE RATING (MAXIMUM): 150 VOLTS
CURRENT RATING: 5 AMPS

TERMINAL BOARDS, MOLDED, BARRIER, SCREW TYPE, CLASS 44TB.
TERMINAL BOARD JUMPERS,
STYLES TBJA, TBJB, TBJC, TBJD,
TBJE, TBJF, AND TBJG

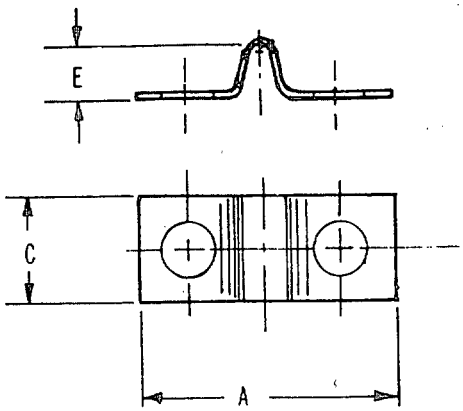

MIL-T-55164/28

STYLE	DIMENSIONS		
	A	C	E
TBJA	.65	.25	.13
TBJB	.75	.31	.15
TBJC	.93	.37	.24

STYLE TBJD

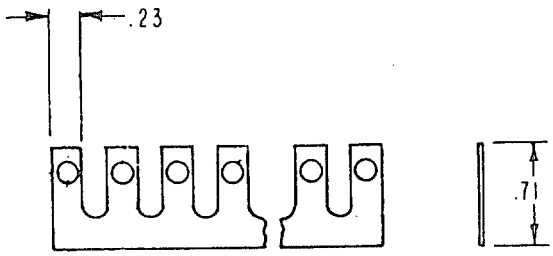

MAX. NO. OF SECTIONS
22

STYLE TBJE

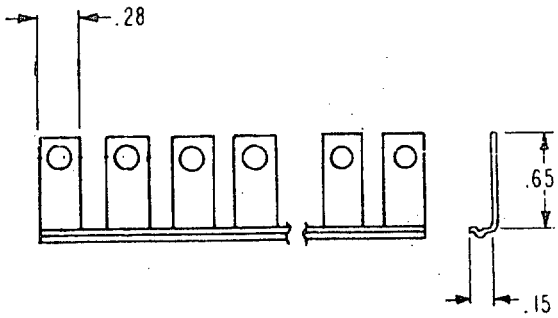

MAX. NO. OF SECTIONS
23

STYLE TBJF

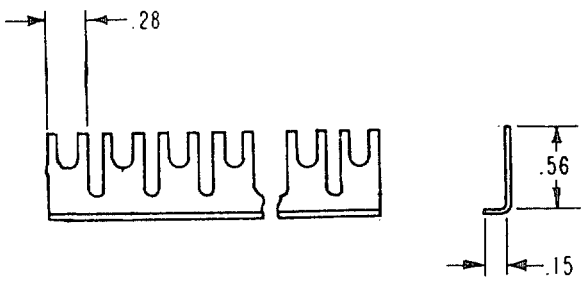

MAX. NO. OF SECTIONS
22

STYLE TBJG

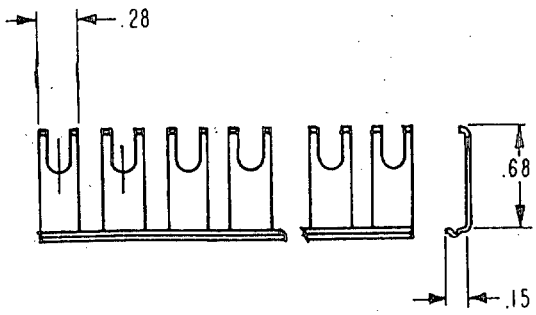

MAX. NO. OF SECTIONS
23

TERMINAL BOARDS LUGS,STYLES TBLD AND TBLS

MIL-T-55164/7

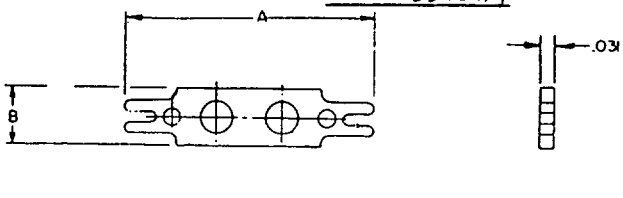

STYLE TBLD

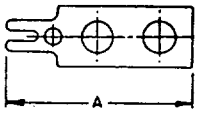

STYLE TBLS

ITEM NUMBERS 37, 38, AND 39

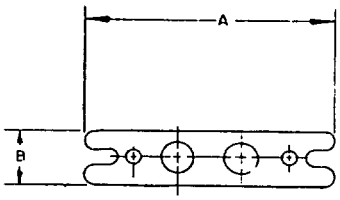

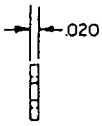

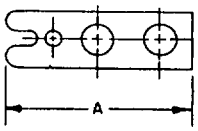

STYLE TBLD

STYLE TBLS

ITEM NUMBER 43

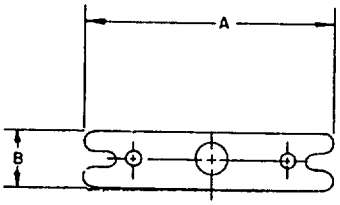

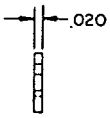

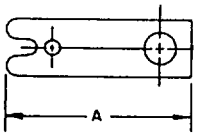

STYLE TBLD

STYLE TBLS

ITEM NUMBER 44

DIMENSIONS	IDENTIFICATION NUMBER		
	ITEM NO. 37 (FOR CLASS 37TB TERMINAL BOARDS)	ITEM NO. 38 (FOR CLASS 38TB TERMINAL BOARDS)	ITEM NO. 39 (FOR CLASS 39TB TERMINAL BOARDS)
A(STYLE TBLD)	1.219	1.578	1.859
A(STYKE TBLS)	.938	1.188	1.406
B	.287	.325	.411

DIMENSIONS	IDENTIFICATION NUMBER	
	ITEM NO. 43 (FOR CLASS 43TB TERMINAL BOARDS	ITEM NO. 44 (FOR CLASS 44TB TERMINAL BOARDS)
A(STYLE TBLD)	1.062	1.031
A(STYLE TBLS)	.812	.719
B	.180	.180

TERMINAL BOARD ASSEMBLY, MOLDED-IN STUD, ELECTRIC

MS27212

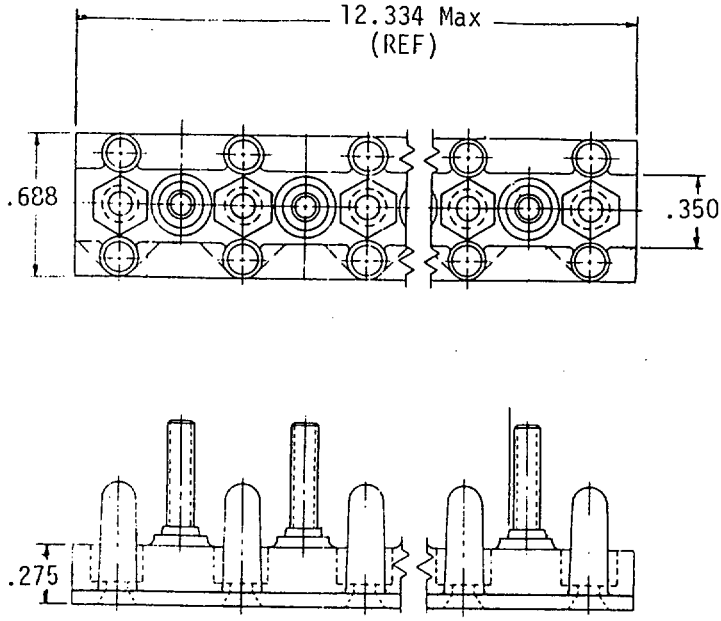

MS27212-1

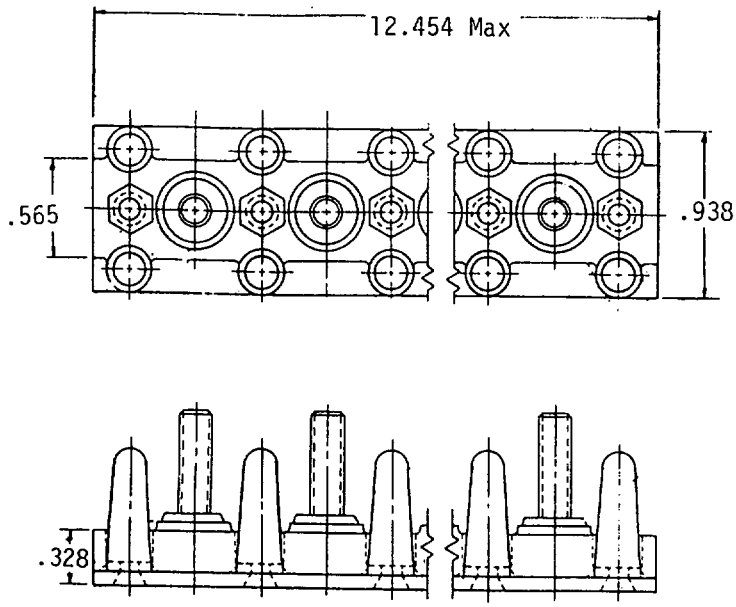

MS27212-2

TERMINAL BOARD ASSEMBLY, MOLDED-IN STUD, ELECTRIC

MS27212

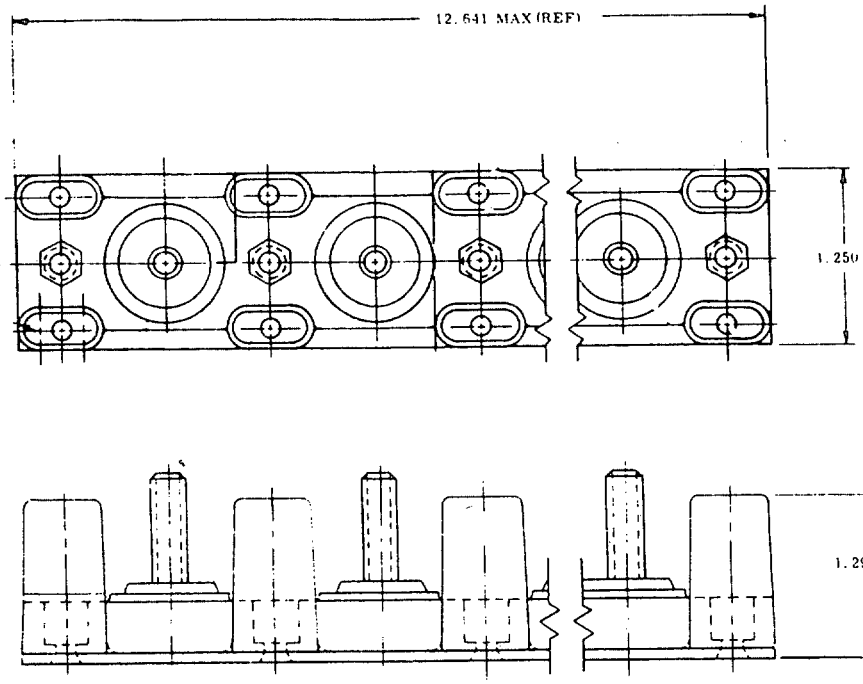

MS27212-3-5

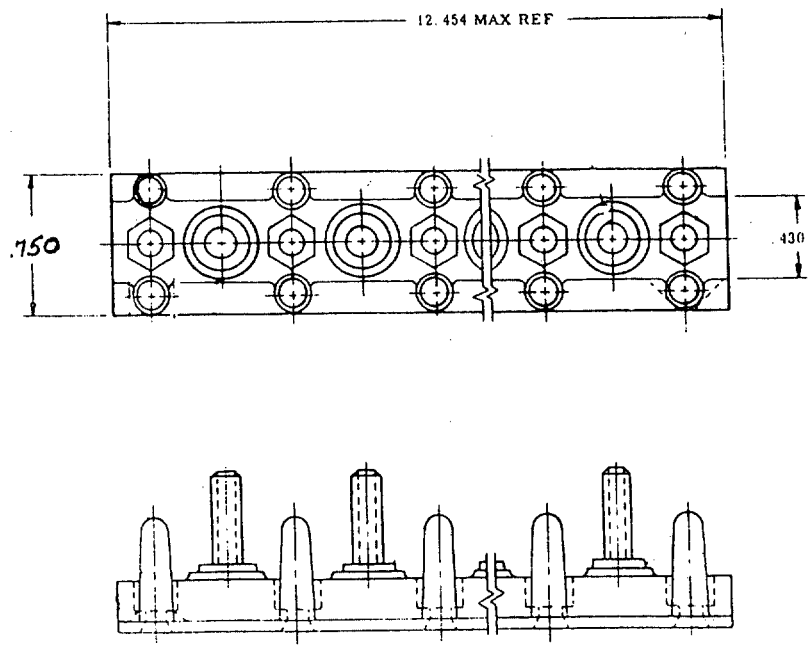

MS27212-6

TERMINAL JUNCTION SYSTEM

MIL-T-81714

SCOPE: THIS SECTION COVERS THE COMPONENTS WHICH ARE USED FOR INTERCONNECTION OF WIRING IN TERMINAL JUNCTION SYSTEMS. THE COMPONENTS MAKING UP THE SYSTEM AND COVERED BY THIS SECTION INCLUDE FEEDBACK AND FEEDTHRU TYPES TERMINAL JUNCTION MODULES, TRACKS FOR MODULES, AND REMOVABLE CONTACT WIRE SPLICES.

TYPE DESIGNATION FOR MODULES: M 81714/7 -A A1

- M — MILITARY PART NO. INDICATOR
- 81714/7 — SPECIFICATION SHEET NO.
- -A — MODULE CLASS (A,B,OR C)
- A1 — BUSSING ARRANGEMENT DESIGNATOR

TYPE DESIGNATION FOR TRACKS: M 81714/5 -1

- M — MILITARY PART NO. INDICATOR
- 81714/5 — SPECIFICATION SHEET NO.
- -1 — DASH NO.

TYPE DESIGNATION FOR SPLICES: M 81714/11 -20 A

- M — MILITARY PART NO. INDICATOR
- 81714/11 — SPECIFICATION SHEET NO.
- -20 — CONTACT SIZE
- A — SPLICE CLASS (A,B,OR C)

TERMINAL JUNCTION SYSTEM
MODULES, FEEDBACK TYPE, SIZE 22

MIL-T-81714/1

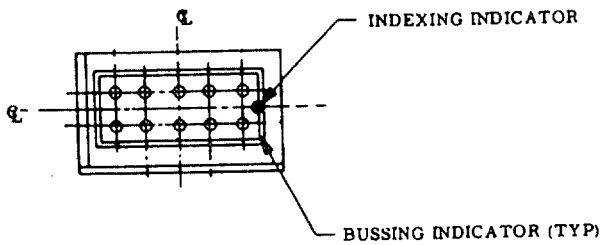

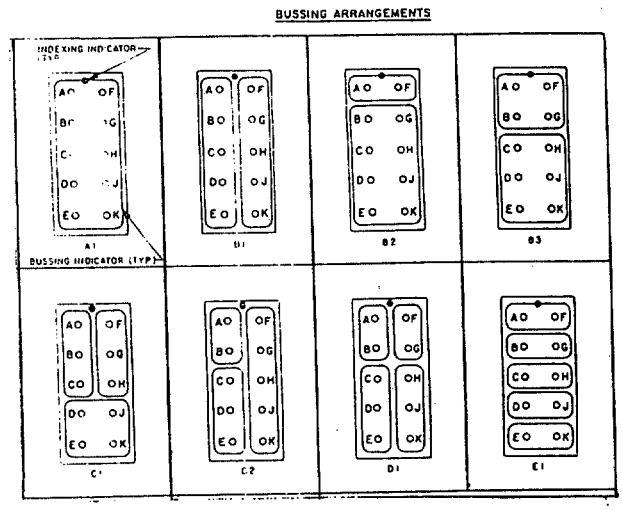

MODULE BLOCK

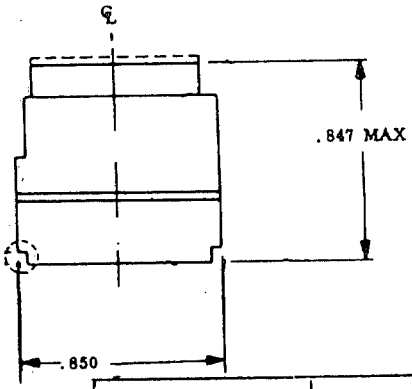

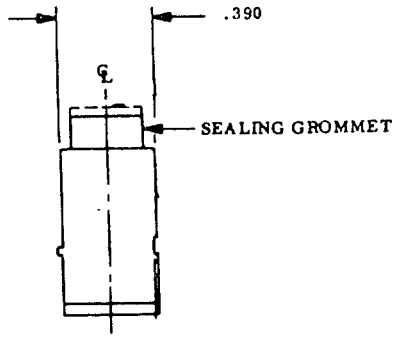

TABLE I.

PART NUMBER M81714/1	COLOR	CONSISTS OF MODULE BLOCK AND CONTACTS PART NUMBER	SEALING PLUGS PART NUMBER
-A**	GREEN	M39029/1-100	MS27488-20
-B**	RED		
-C**	BLACK		

**BUSSING ARRANGEMENT

TERMINAL JUNCTION SYSTEM
MODULES, FEEDBACK TYPE, SIZE 20

MIL-T-81714/2

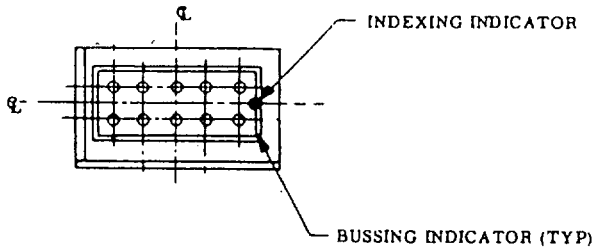

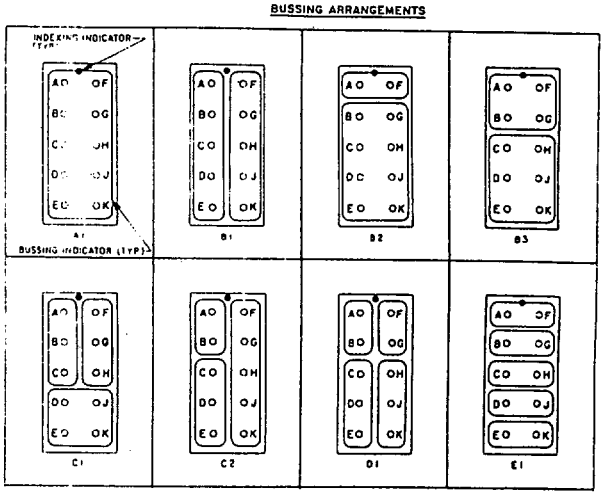

MODULE BLOCK

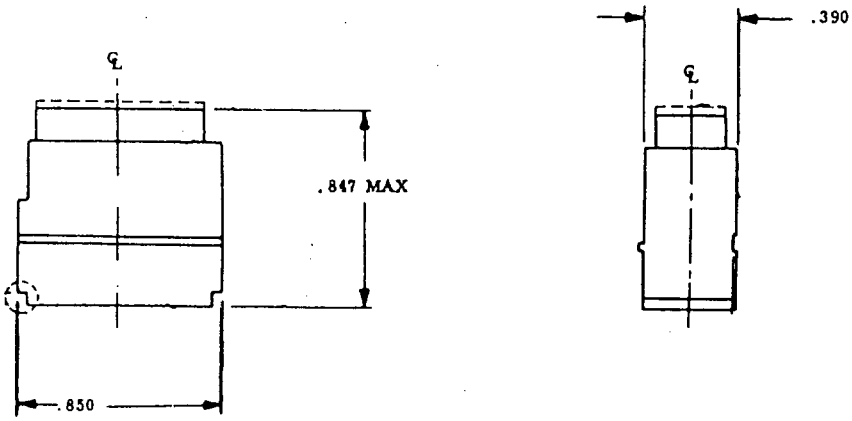

TABLE I.

PART NUMBER M81714/2	COLOR	CONSISTS OF MODULE BLOCK AND CONTACTS PART NUMBER	SEALING PLUGS PART NUMBER
-A**	GREEN	M39029/1-101	MS27488-20
-B**	RED		
-C**	BLACK		

**BUSSING ARRANGEMENT

TERMINAL JUNCTION SYSTEM
MODULES, FEEDBACK TYPE, SIZE 16

MIL-T-81714/3

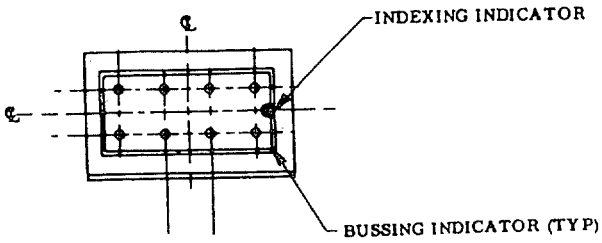

BUSSING ARRANGEMENTS

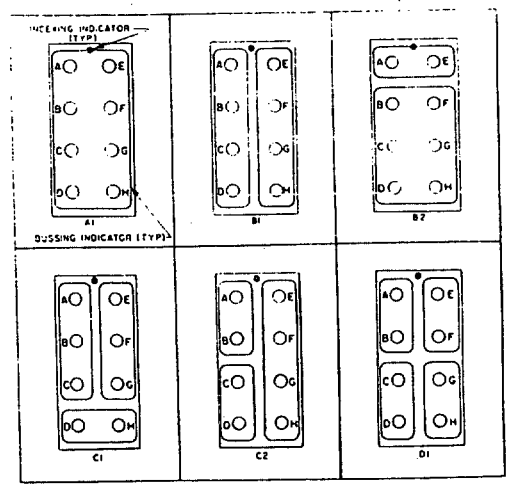

MODULE BLOCK

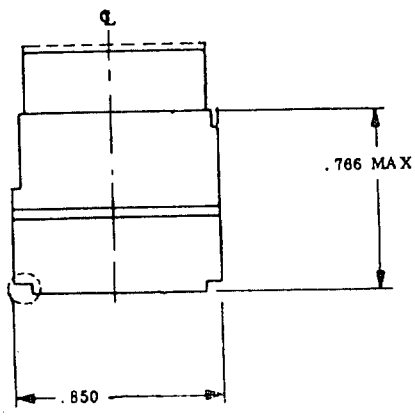

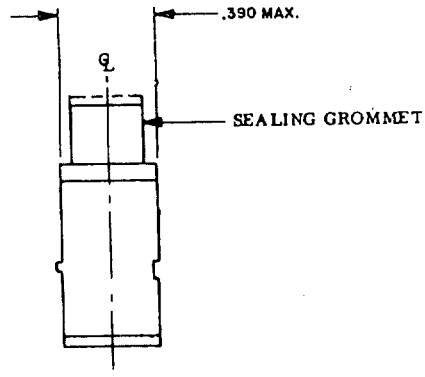

TABLE I.

PART NUMBER M81714/3	COLOR	CONSISTS OF MODULE BLOCK AND CONTACTS PART NUMBER	SEALING PLUGS PART NUMBER
-A**	GREEN	M39029/1-102	MS27488-16
-B**	RED		
-C**	BLACK		

**BUSSING ARRANGEMENT

TERMINAL JUNCTION SYSTEM
MODULES, FEEDBACK TYPE, SIZE 12

MIL-T-81714/4

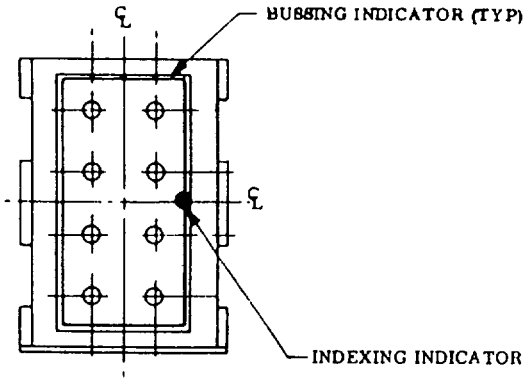

BUSSING ARRANGEMENT

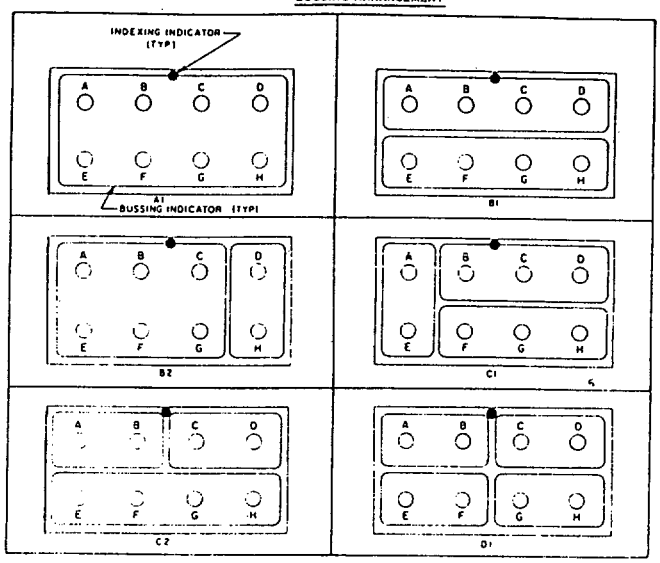

MODULE BLOCK

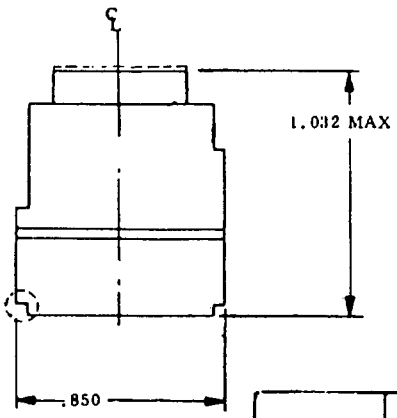

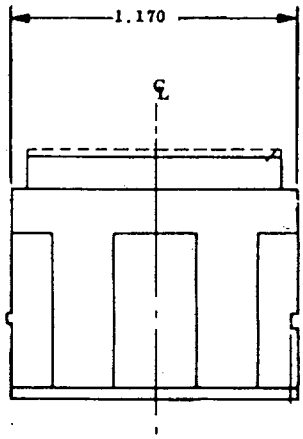

TABLE I.

PART NUMBER M81714/4	COLOR	CONSISTS OF MODULE BLOCK AND CONTACTS PART NUMBER	SEALING PLUGS PART NUMBER
-A**	GREEN	M39029/1-103	MS27488-12
-B**	RED		
-C**	BLACK		

**BUSSING ARRANGEMENT

TERMINAL JUNCTION SYSTEM
MODULES, FEEDTHRU TYPE, SIZE 22

MIL-T-81714/6

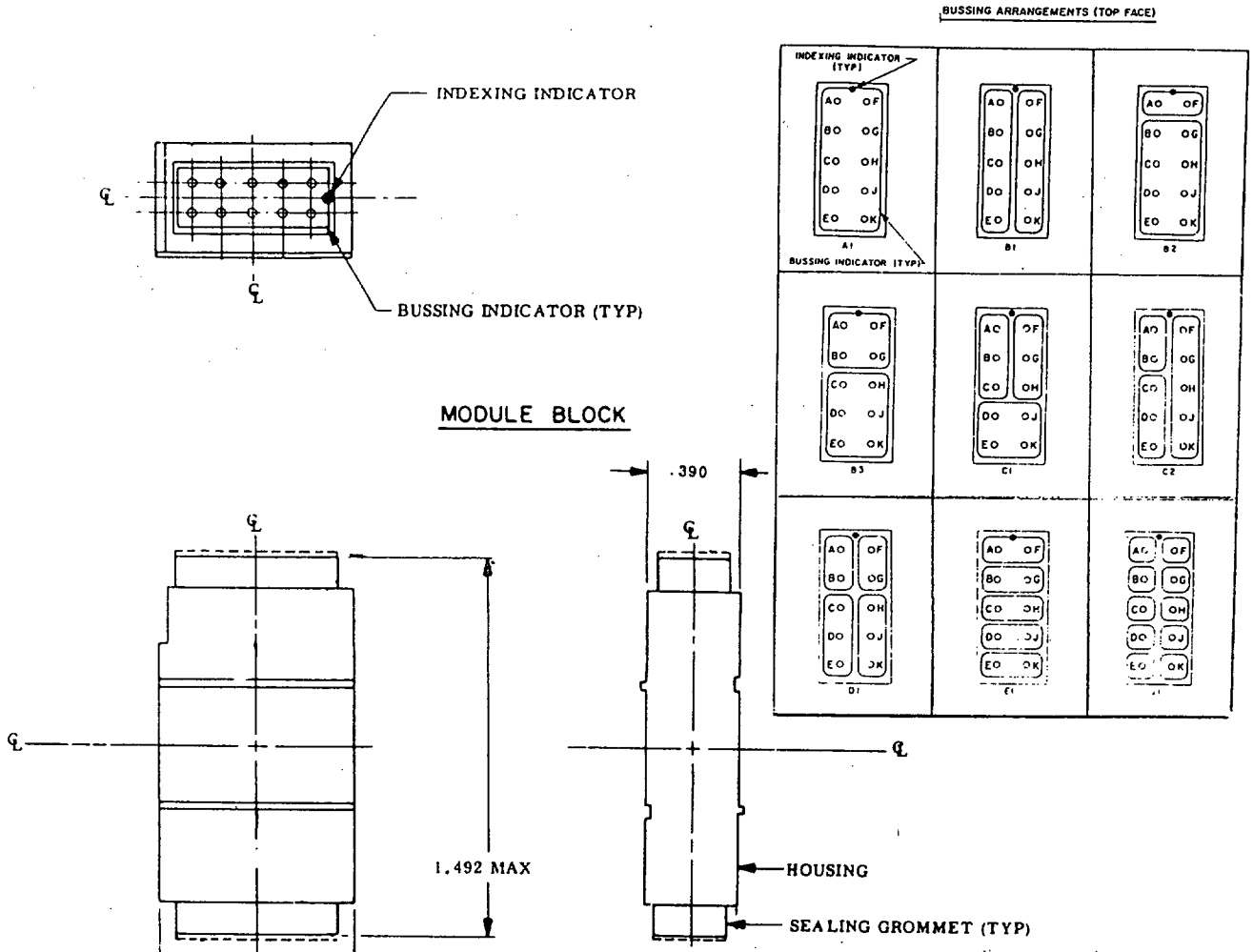

TABLE I.

PART NUMBER M81714/6	COLOR	CONSISTS OF MODULE BLOCK AND CONTACTS PART NUMBER	SEALING PLUGS PART NUMBER
-A**	GREEN	M39029/1-100	MS27488-20
-B**	RED		
-C**	BLACK		

**BUSSING ARRANGEMENT

TERMINAL JUNCTION SYSTEM
MODULES, FEEDTHRU TYPE, SIZE 20

MIL-T-81714/7

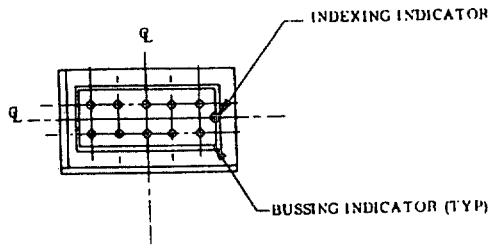

BUSSING ARRANGEMENTS

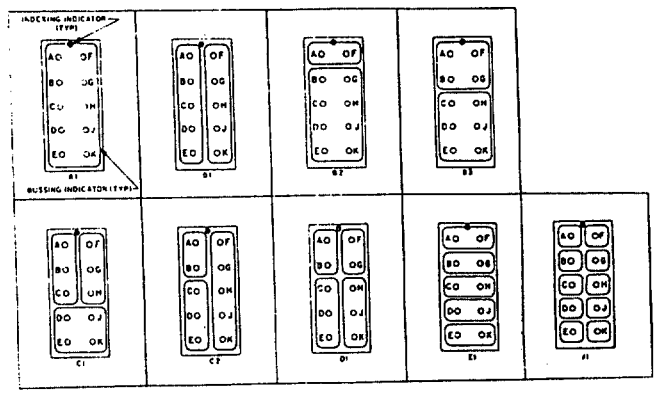

MODULE BLOCK

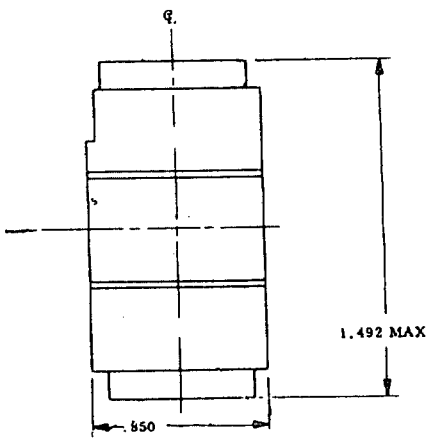

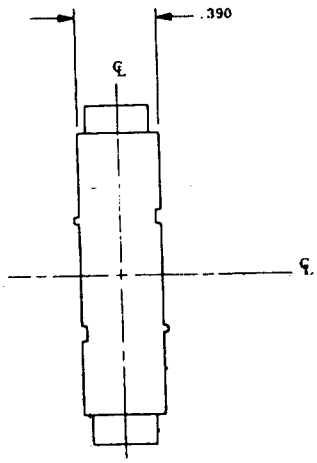

TABLE I.

PART NUMBER M81714/7	COLOR	CONSISTS OF MODULE BLOCK AND CONTACTS PART NUMBER	CONSISTS OF MODULE BLOCK AND SEALING PLUGS PART NUMBER	INSERTION/ EXTRACTION TOOL PART NUMBER
-A*	GREEN	M39029/1-16-20	M83723/28-20	M83723/31-20 MS3447-20
-B*	RED			
-C*	BLACK			

TERMINAL JUNCTION SYSTEM
MODULES, FEEDTHRU TYPE, SIZE 16

MIL-T-81714/8

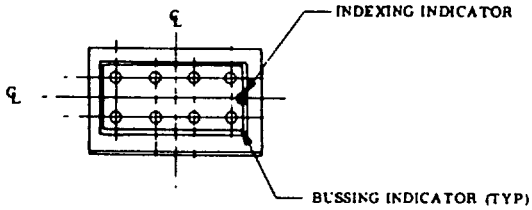

MODULE BLOCK

BUSSING ARRANGEMENT

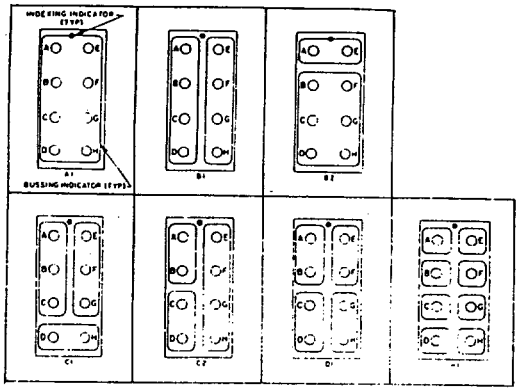

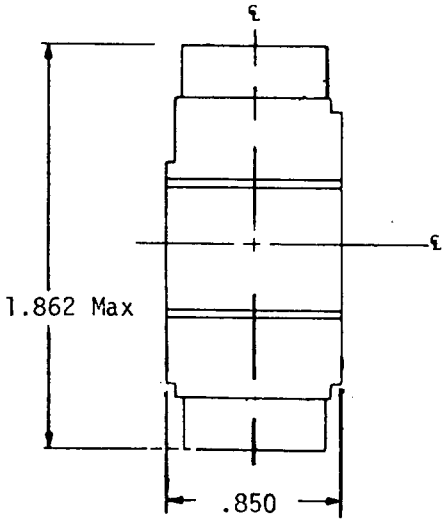

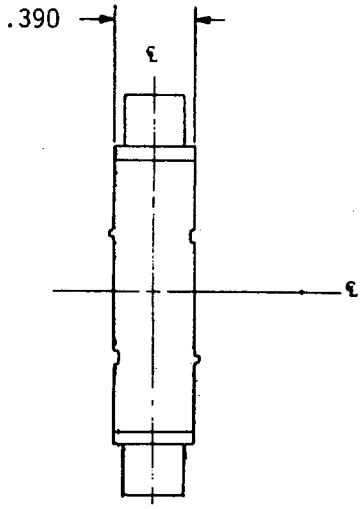

TABLE I.

PART NUMBER M81714/8	COLOR	CONSISTS OF MODULE BLOCK AND CONTACTS PART NUMBER	SEALING PLUGS PART NUMBER	INSERTION/ EXTRACTION TOOL PART NUMBER
-A*	GREEN	M39029/1-14-16	M83723/31-16	M83723/28-16
-B*	RED			
-C*	BLACK			

TERMINAL JUNCTION SYSTEM
MODULES, FEEDTHRU TYPE, SIZE 12

MIL-T-81714/9

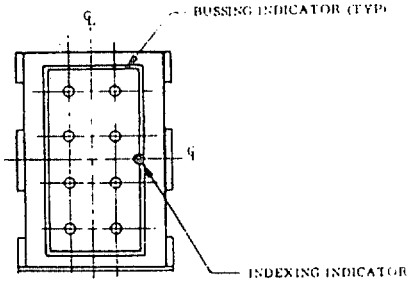

BUSSING ARRANGEMENTS (TOP FACE)

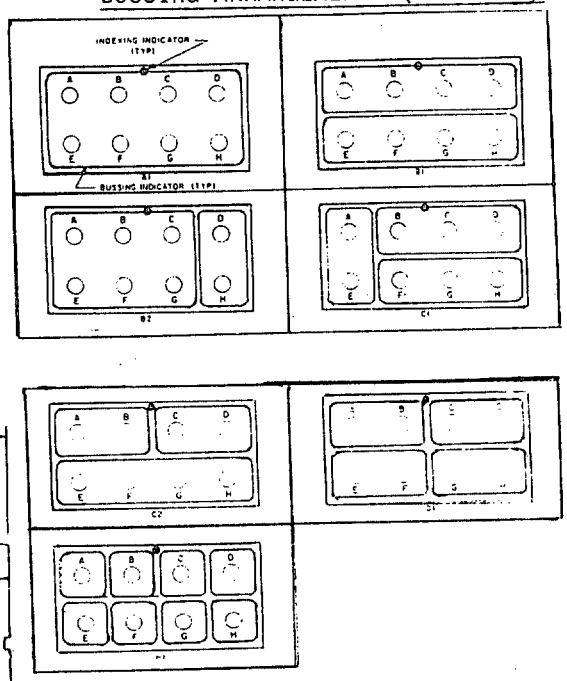

MODULE BLOCK

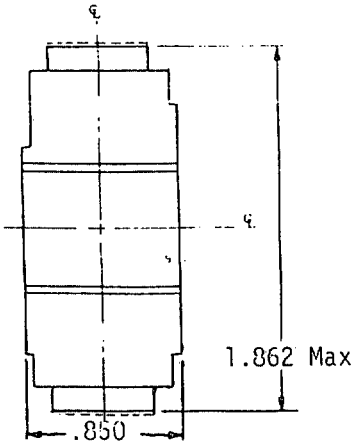

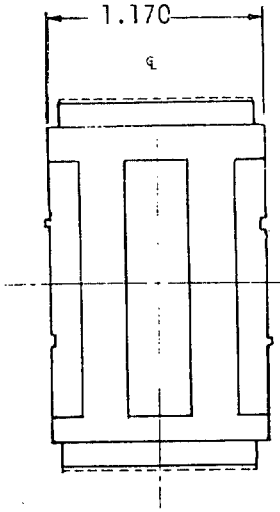

TABLE I.

PART NUMBER M81714/9	COLOR	CONSISTS OF MODULE BLOCK AND CONTACTS PART NUMBER	CONSISTS OF MODULE BLOCK AND SEALING PLUGS PART NUMBER	INSERTION/ EXTRACTION TOOL PART NUMBER
-A**	GREEN	M39029/1-14-16	M83723/31-16	M81969/14-04
-B**	RED			
-C**	BLACK			

**BUSSING ARRANGEMENT

TERMINAL JUNCTION SYSTEM
TRACK ASSEMBLY, FEEDBACK TYPE

MIL-T-81714/5

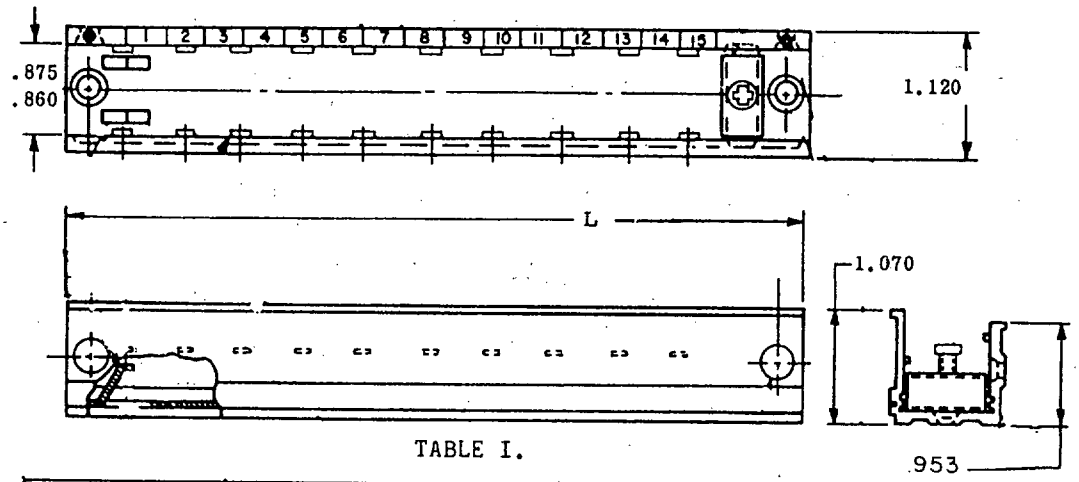

TABLE I.

PART NO. M81714/5-	NUMBER OF MODULES	L	TAB LOCATION
1	10	5.291	A THRU G
2	3	2.561	A C
3	4	2.951	A C
4	5	3.341	A D
5	6	3.731	A E
6	7	4.121	A E
7	8	4.511	A F
8	9	4.901	A G
9	11	5.681	A H
10	12	6.071	A I
11	13	6.461	A I
12	14	6.851	A J
13	15	7.241	A THRU K

TERMINAL JUNCTION SYSTEM
TRACK ASSEMBLY, FEEDBACK TYPE,
LIGHT WEIGHT

MIL-T-81714/16

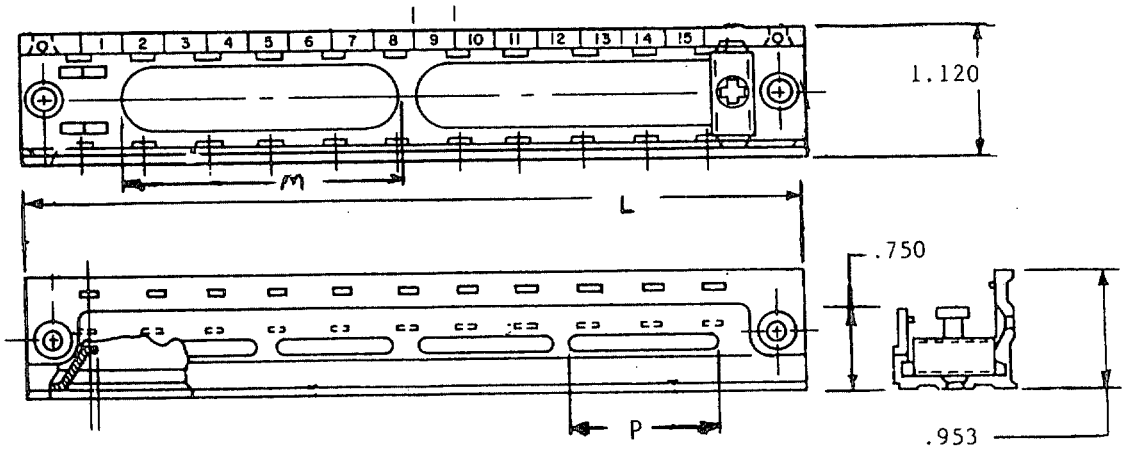

TABLE I.

DASH NO.	NUMBER OF MODULES	L	M MIN	P MIN	TAB LOCATION
1	10	5.291	1.67	1.67	A THRU G
2	3	2.561	1.09	1.09	A C
3	4	2.951	1.48	1.48	A C
4	5	3.341	.70	.70	A D
5	6	3.731	.90	.90	A E
6	7	4.121	1.09	1.09	A E
7	8	4.511	1.28	1.28	A F
8	9	4.901	1.48	1.48	A G
9	11	5.681	1.87	.86	A H
10	12	6.071	2.06	.96	A I
11	13	6.461	2.26	1.06	A I
12	14	6.851	2.45	1.16	A J
13	15	7.241	2.65	1.25	A K

TERMINAL JUNCTION SYSTEM
TRACK ASSEMBLY, FEEDTHRU TYPE

MIL-T-81714/10

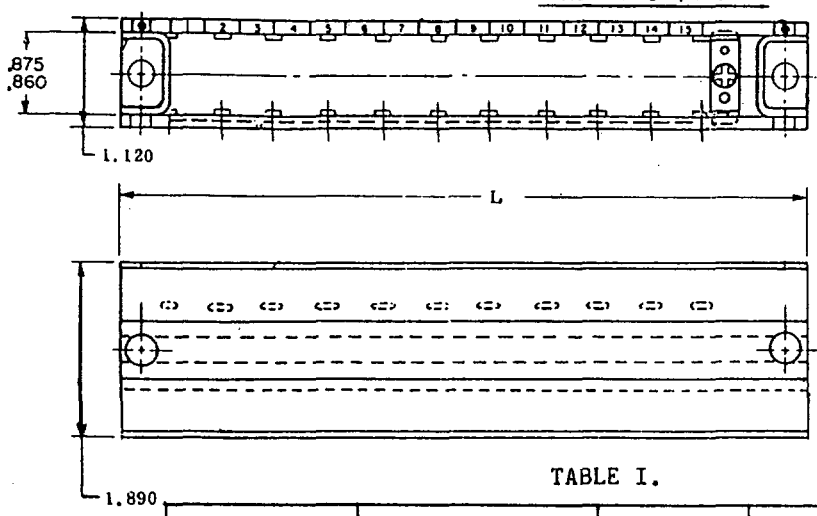

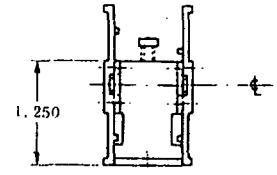

END BRACKET POSITIONED
ROTATED 90° CCW

TABLE I.

PART NO. M81714/10-	NUMBER OF MODULES	L	TAB LOCATION
1	10	5.551	A THRU G
2	3	2.821	A C
3	4	3.211	A C
4	5	3.601	A D
5	6	3.991	A E
6	7	4.381	A E
7	8	4.771	A F
8	9	5.161	A G
9	11	5.941	A H
10	12	6.331	A I
11	13	6.721	A I
12	14	7.111	A J
13	15	7.501	A THRU K

TERMINAL JUNCTION SYSTEM
SPLICE, SINGLE

MIL-T-81714/11

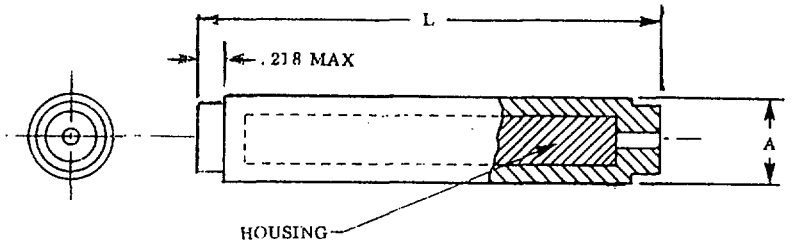

SINGLE SPLICE BODY

TABLE I. SPLICE

PART NUMBER M81714/11	COLOR	SPLICE CONSISTS OF BODY A DIA	BODY L MAX	CONTACTS PART NUMBER	INSTALLING REMOVAL TOOL
-22A B C	GREEN WHITE RED	.250	1.552	M39029 1-100	M81969/14-02
-20A B C	GREEN WHITE RED	.250	1.552	M39029/1-101	M81969/14-02
-16A B C	GREEN WHITE RED	.281	1.922	M39029/1-102	M81969/14-03
-12A B C	GREEN WHITE RED	.344	1.922	M39029/1-103	M81969/14-04

TERMINALS, LUGS

MIL-T-55156

SCOPE: THIS SECTION COVERS GENERAL REQUIREMENTS FOR SCREW-TYPE LUG TERMINALS FOR SOLID AND STRANDED COPPER CONDUCTORS.

TYPE DESIGNATION: LP01 L 001

STYLE — LP01

ITEM NAME(LUG) — L

IDENTIFICATION NUMBER — 001

TERMINALS, LUGS, STYLE LP01

MIL-T-55156/1

SEE DETAIL DRAWING ON PAGE 561.2

TABLE I. TYPE DESIGNATOR AND CHARACTERISTICS.

TYPE DESIGNATOR LP01L	TERMINAL SIZES	DIMENSIONS			RATED CURRENT
		A(MAX)	B(MAX)	C(MAX)	
001	14	1-3/8	15/16	5/8	32
002	12-10	1-3/8	15/16	5/8	66
004	8	1-1/2	1-1/16	5/8	117
005	6	1-1/2	1-1/16	5/8	142
007	4	1-15/16	1-3/8	7/8	189
009	2	1-15/16	1-3/8	7/8	253
010	1	2-1/4	1-7/16	15/16	300
011	0	2-1/4	1-7/16	15/16	345
012	00	2-9/16	1-9/16	1-1/8	400
013	000	2-6/16	1-9/16	1-1/8	465
014	0000	3-9/16	1-15/16	1-3/8	540
015	350 MCM	3-9/16	1-15/16	1-3/8	640
016	400 MCM	4-1/8	2-1/8	1-5/8	740
017	500 MCM	4-1/8	2-1/8	1-5/8	860
018	650 MCM	4-11/16	2-1/2	1-15/16	1000
019	800 MCM	4-11/16	2-1/2	1-15/16	1190
020	1000 MCM	5-9/16	2-11/16	2	1375
021	1600 MCM	5-11/16	3-15/16	2-1/2	1800
022	2000 MCM	5-11/16	3-15/16	2-1/2	2000

TERMINALS, LUGS, STYLE LP01 AND LP02

MIL-T-55156/1 AND /2

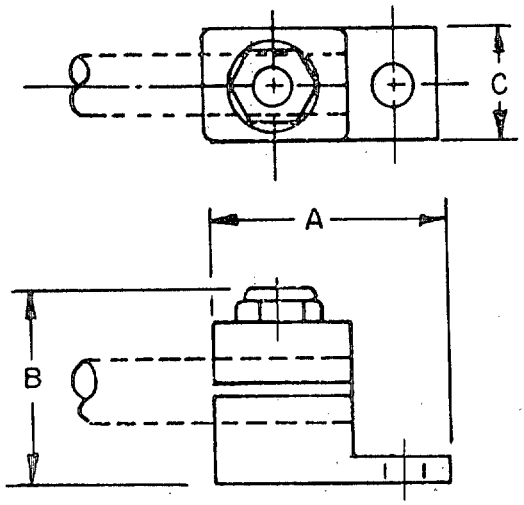

STYLE LP01

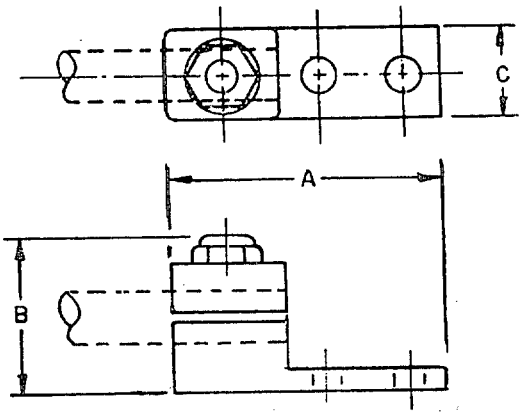

STYLE LP02

TERMINALS, LUGS, STYLE LP02

MIL-T-55156/2

TABLE I. TYPE DESIGNATOR AND CHARACTERISTICS.

TYPE DESIGNATOR LP02L	TERMINAL SIZES	DIMENSIONS			RATED CURRENT
		A(MAX)	B(MAX)	C(MAX)	
015	350 MCM	3-7/8	1-15/16	1-3/8	640
016	400 MCM	4-1/4	2-1/8	1-5/8	740
018	650 MCM	4-7/8	2-1/2	1-15/16	1000
019	800 MCM	4-7/8	2-1/2	1-15/16	1190
020	1000 MCM	5-1/2	2-11/16	2	1375
021	1600 MCM	6-1/4	3-15/16	2-1/2	1800
022	2000 MCM	6-1/4	3-15/16	2-1/2	2000

TERMINALS, LUGS, STYLE LP06

MIL-T-55156/6

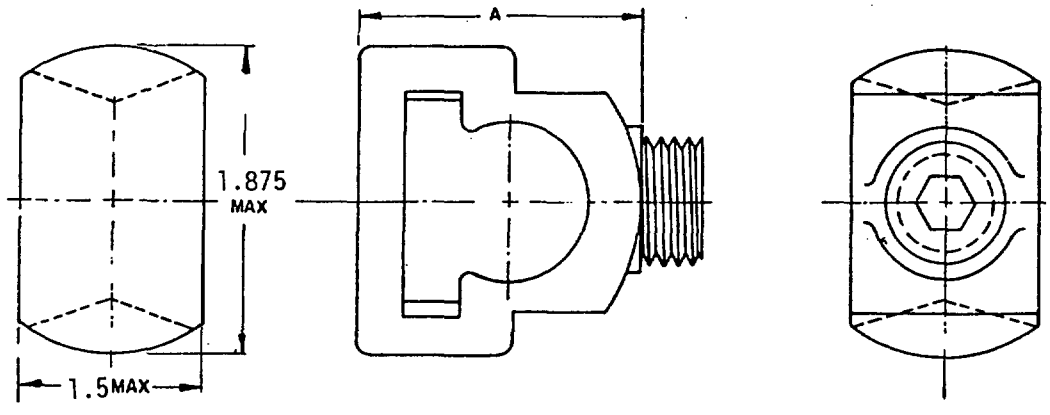

TABLE I. TYPE DESIGNATOR AND CHARACTERISTICS.

TYPE DESIGNATOR LP01L	TERMINAL SIZES	DIMENSION A(MAX)	RATED CURRENT
001	2	2	253
002	1	2	300
003	0	2	345
004	00	2-1/16	400
005	000	2-1/16	465
006	0000	2-5/8	540
007	300 MCM	2-5/8	595
008	350 MCM	2-5/8	670
009	400 MCM	2-5/8	740

561.3/561.4

TERMINALS, LUG AND SPLICES, CONDUCTOR, CRIMP STYLE, COPPER

MIL-T-7928

SCOPE: THIS SECTION COVERS INSULATED CRIMP-STYLE COPPER TERMINAL LUGS AND CONDUCTOR SPLICES FOR STRANDED CONDUCTORS. THESE TERMINALS AND SPLICES ARE INTENDED FOR USE ON ALL CONDUCTORS HAVING DIAMETERS WITHIN THE RANGES SPECIFIED ON THE APPLICABLE MS STANDARD OR SPECIFICATION SHEET.

PART NUMBER EXAMPLE: M7928 /1 -1

MILITARY SPECIFICATION

SLASH SHEET NUMBER

DASH NUMBER

MS PART NUMBER EXAMPLE: MS17143 -1

MILITARY STANDARD

DASH NUMBER

211

TERMINALS, LUG AND SPLICES, CONDUCTOR, CRIMP STYLE, COPPER
TERMINAL, LUG, CRIMP STYLE, COPPER, INSULATED, RING TONGUE,
FOR THIN WALL WIRE, TYPE II CLASS I
FOR 105°C TOTAL CONDUCTOR TEMPERATURE

MIL-T-7928/1

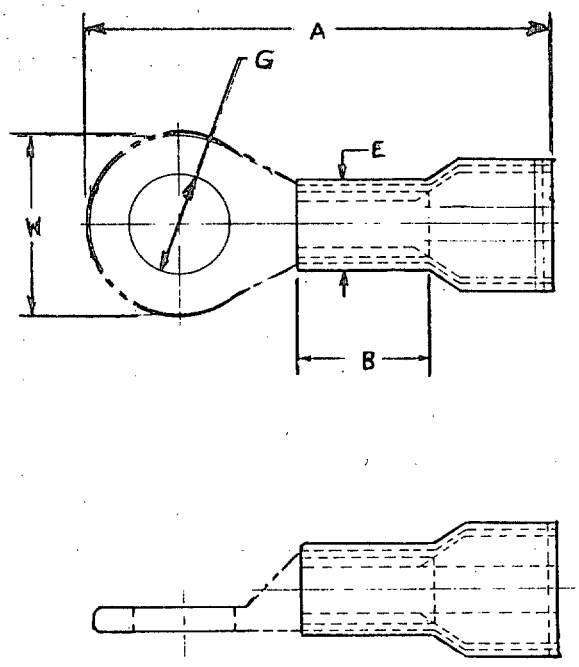

TERMINALS, LUG AND SPLICES, CONDUCTOR, CRIMP STYLE, COPPER
TERMINAL, LUG, CRIMP STYLE, COPPER, INSULATED, RING TONGUE,
FOR THIN WALL WIRE, TYPE II CLASS I
FOR 105°C TOTAL CONDUCTOR TEMPERATURE

MIL-T-7928/1

TABLE I. PART NO., DIMENSIONS, COLORS

PART NO. M7928/1-	TERM. SIZE	STUD SIZE	DIMENSIONS A MAX.	B MIN.	E DIA	G DIA MAX	W MAX	INSUL. SLEEVE COLOR	WIRE SIZE COLOR
1	26	2 (.086)	.740	.126	.215	.098	.210	YELLOW	BLACK
2		4 (.112)	.786		.190	.122			
3		6 (.138)				.152	.260		
4		8 (.164)	.886			.178	.330		
5		10 (.190)				.203			
6	24	2 (.086)	.740	.126	.215	.098	.210	YELLOW	BLUE
7		4 (.112)	.786		.190	.122	.260		
8		6 (.138)	.886			.152			
9		8 (.164)				.178	.330		
10		10 (.190)				.203			
70	22	2 (.086)	.790	.156	.215	.098	.230	RED	GREEN
11		4 (.112)	.801		.190	.122			
12		6 (.138)				.152			
13		6 (.138)	.911				.260		
14		8 (.164)	.956			.178	.320		
15		10 (.190)				.203			
16		1/4 (.250)	1.136			.275	.473		
17		5/16 (.312)				.338			
18		3/8 (.375)	1.366			.400	.540		
19		1/2 (.500)				.525	.720		
71	20	2 (.086)	.790	.156	.215	.098	.230	RED	RED
20		4 (.112)	.801		.190	.122			
21		6 (.138)				.152			
22		6 (.138)	.911				.260		
23		8 (.164)	.956			.178	.320		
24		10 (.190)				.203			
25		1/4 (.250)	1.136			.275	.473		
26		5/16 (.312)				.338			
27		3/8 (.375)	1.366			.400	.540		
28		1/2 (.500)				.525	.720		
72	18	2 (.086)	.790	.156	.255	.098	.230	RED	WHITE
29		4 (.112)	.801		.190	.122			
30		6 (.138)				.152			
31		6 (.138)	.911				.260		
32		8 (.164)	.956			.178	.320		

TERMINALS, LUG AND SPLICES, CONDUCTOR, CRIMP STYLE, COPPER
TERMINAL, LUG, CRIMP STYLE, COPPER, INSULATED, RING TONGUE,
FOR THIN WALL WIRE, TYPE II CLASS I
FOR 105°C TOTAL CONDUCTOR TEMPERATURE

MIL-T-7928/1

TABLE I. PART NO., DIMENSIONS, COLORS

PART NO. M7928/1-	TERM. SIZE	STUD SIZE	DIMENSIONS A MAX.	B MIN.	E DIA	G DIA MAX	W MAX	INSUL. SLEEVE COLOR	WIRE SIZE COLOR
33	18	10 (.190)	.956	.156	.215	.203	.320	RED	WHITE
34		1/4 (.250)	1.136		.190	.275	.473		
35		5/16 (.312)				.338			
36		3/8 (.375)	1.366			.400	.540		
37		1/2 (.500)				.525	.720		
38	16	4 (.112)	.820	.156	.240	.122	.260	BLUE	BLUE
39		6 (.138)			.210	.152			
40		6 (.138)	.956				.317		
41		8 (.164)				.178			
42		10 (.190)	.961			.203			
43		1/4 (.250)	1.131			.275	.473		
44		5/16 (.312)				.338			
45		3/8 (.375)	1.271			.400	.540		
46		1/2 (.500)	1.366			.525	.720		
47	14	4 (.112)	.820	.156	.240	.122	.260	BLUE	GREEN
48		6 (.138)			.210	.152			
49		6 (.138)	.956				.317		
50		8 (.164)				.178			
51		10 (.190)	.961			.203			
52		1/4 (.250)	1.131			.275	.473		
53		5/16 (.312)				.338			
54		3/8 (.375)	1.271			.400	.540		
55		1/2 (.500)	1.366			.525	.720		
56	12	6 (.138)	1.198	.234	.300	.152	.380	YELLOW	YELLOW
57		8 (.164)			.275	.178			
58		10 (.190)				.203			
59		1/4 (.250)	1.400			.275	.536		
60		5/16 (.312)				.338			
61		3/8 (.375)	1.492			.400	.598		
62		1/2 (.500)				.525	.720		
63	10	6 (.138)	1.198	.234	.300	.152	.380	YELLOW	BROWN
64		8 (.164			.275	.178			
65		10 (.190)				.203			
66		1/4 (.250)	1.400			.275	.536		
67		5/16 (.312)				.338			
68		3/8 (.375)	1.492			.400	.598		
69		1/2 (.500)				.525	.720		

TERMINALS, LUG AND SPLICES, CONDUCTOR, CRIMP STYLE, COPPER
INSULATED, RECTANGULAR TONGUE,
FOR THIN WALL WIRE, TYPE II CLASS I
FOR 105°C TOTAL CONDUCTOR TEMPERATURE

MIL-T-7928/2

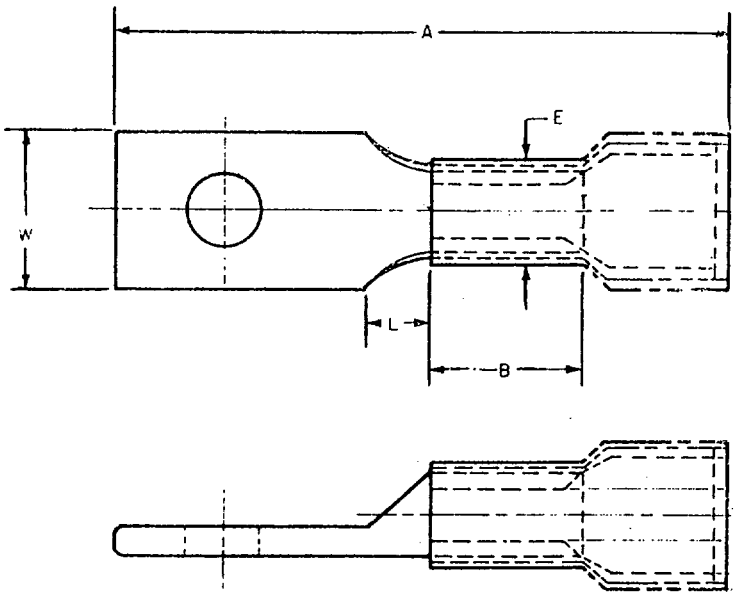

TABLE I. PART NO., DIMENSIONS, COLOR

PART NO. M7928/2-	WIRE. SIZE	STUD SIZE	DIMENSIONS A MAX.	B MIN.	E DIA	L MAX	W	INSUL. SLEEVE COLOR	WIRE SIZE COLOR
1	22	4 (.112)	.842	.156	.215	.125	.237	RED	GREEN
2		4 (.112)	1.061		.190	.156			
3		5 (.125)	.905			.125	.277		
4		6 (.138)	1.061			.156	.237		
5		6 (.138)	1.155			.250	.302		
6		8 (.164)							
7		8 (.164)	1.405			.281	.390		
8	20	4 (.112)	.842	.156	.215	.125	.237	RED	RED
9		4 (.112)	1.061		.190	.156			
10		5 (.125)	.905			.125	.277		
11		6 (.138)	1.061			.156	.237		
12		6 (.138)	1.155			.250	.302		
13		8 (.164)							
14		8 (.164)	1.405			.281	.390		

TERMINALS, LUG AND SPLICES, CONDUCTOR, CRIMP STYLE, COPPER
INSULATED, RECTANGULAR TONGUE,
FOR THIN WALL WIRE, TYPE II CLASS I
FOR 105°C TOTAL CONDUCTOR TEMPERATURE

MIL-T-7928/2

TABLE I. PART NO., DIMENSIONS, COLOR

PART NO. M7928/2-	WIRE. SIZE	STUD SIZE		DIMENSIONS A MAX.	B MIN.	E DIA	L MAX	W	INSUL. SLEEVE COLOR	WIRE SIZE COLOR
15	18	4	(.112)	.842	.156	.215	.125	.237	RED	WHITE
16		4	(.112)	1.061		.190	.156			
17		5	(.125)	.905			.125	.277		
18		6	(.138)	1.061			.156	.237		
19		6	(.138)	1.155			.250	.302		
20		8	(.164)							
21		8	(.164)	1.405			.281	.390		
22	16	4	(.112)	.842	.156	.240	.125	.237	BLUE	BLUE
23		4	(.112)	1.061		.210	.156			
24		5	(.125)	.905			.125	.277		
25		6	(.138)	1.061			.156	.237		
26		6	(.138)	1.155			.250	.320		
27		8	(.164)							
28		8	(.164)	1.405			.281	.390		
29	14	4	(.112)	.842	.156	.240	.125	.237	BLUE	GREEN
30		4	(.112)	1.061		.210	.156			
31		5	(.125)	.905			.125	.277		
32		6	(.138)	1.061			.156	.237		
33		6	(.138)	1.155			.250	.302		
34		8	(.164)							
35		8	(.164)	1.405			.281	.390		
36	12	4	(.112)	1.062	.234	.300	.125	.237	YELLOW	YELLO
37		4	(.112)	1.281		.275	.156			
38		5	(.125)	1.124		.300	.125	.277		
39		6	(.138)	1.281		.275	.156	.237		
40		6	(.138)	1.359			.250	.302		
41		8	(.164)							
42		8	(.164)	1.609			.281	.390		
43	10	4	(.112)	1.062	.234	.300	.125	.237	YELLOW	BROWN
44		4	(.112)	1.281		.275	.156			
45		5	(.125)	1.124			.125	.277		
46		6	(.138)	1.281			.156	.237		
47		6	(.138)	1.359			.250	.302		
48		8	(.164)							
49		8	(.164)	1.609			.281	.390		

TERMINAL, LUG, CRIMPE STYLE, COPPER, INSULATED, RECTANGULAR TONGUE, TYPE II, CLASS 1
FOR 105 C TOTAL CONDUCTOR TEMPERATURE

MS17143

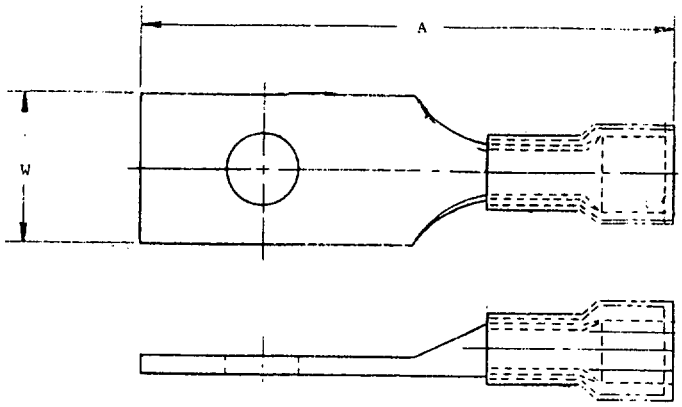

TABLE I. TYPE DESIGNATOR AND CHARACTERISTICS.

PART NUMBER MS17143-	WIRE SIZE AWG	STUD SIZE (DEC)	DIMENSIONS A(MAX)	DIMENSIONS W(MAX)	INSULATION SLEEVE COLOR
1	22-18	.164	1.359	.390	RED
2	16-14				BLUE
3	12-10		1.531		YELLOW
4	22-18	.138	1.109	.302	RED
5	16-14				BLUE
6	12-10		1.281		YELLOW
7	22-18	.164	1.109		RED
8	16-14				BLUE
9	12-10		1.281		YELLOW
10	22-18	.125	.859	.277	RED
11	16-14				BLUE
12	12-10		1.046		YELLOW
13	22-18	.138	1.015	.237	RED
14	16-14				BLUE
15	12-10		1.203		YELLOW
16	22-18		1.015		RED
17	16-14	.112			BLUE
18	12-10		1.203		YELLOW
19	22-18		.796		RED
20	16-14				BLUE
21	12-10		.984		YELLOW

TERMINAL, LUG, CRIMPE STYLE, COPPER, UNINSULATED, RING TONGUE, TYPE I, CLASS 1
FOR 175°C TOTAL CONDUCTOR TEMPERATURE

MS20659

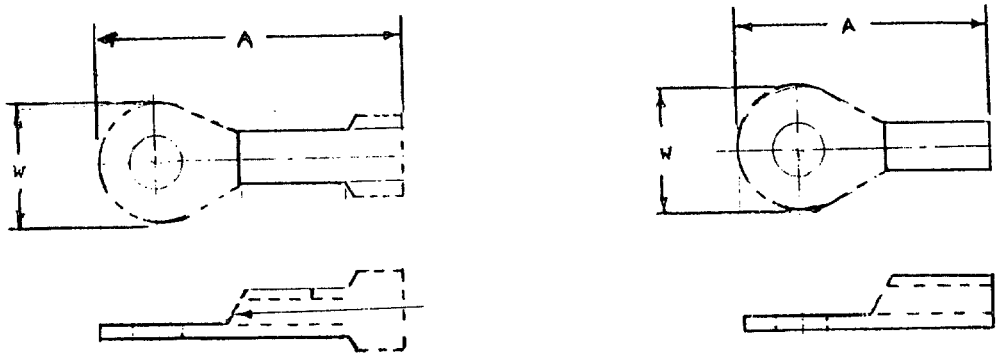

TABLE I. TYPE DESIGNATOR AND CHARACTERISTICS.

PART NUMBER MS20659-	WIRE SIZE AWG	STUD SIZE (DEC)	DIMENSIONS A(MAX)	DIMENSIONS W(MAX)
167	22-18	.086	.890	.260
138		.112		
101		.138		
102		.190	.986	.320
161		.312	1.187	.540
125		.375	1.308	
162		.500	1.530	.733
139	16-14	.112	.947	.266
103		.138	.955	.327
126			.947	.266
104		.190	.955	.327
163		.312	1.249	.540
127		.375	1.290	
164		.500	1.593	.733
165	12-10	.138	.955	.317
105		.190	.969	.391
106		.312	1.156	.547
128		.375	1.172	.598
166		.500	1.718	.733
140	8	.164	1.150	.429
107		.190		.429

TERMINAL, LUG, CRIMPE STYLE, COPPER, UNINSULATED, RING TONGUE, TYPE I, CLASS 1
FOR 175°C TOTAL CONDUCTOR TEMPERATURE

MS20659

TABLE I. TYPE DESIGNATOR AND CHARACTERISTICS. (CONT.)

PART NUMBER MS20659-	WIRE SIZE AWG	STUD SIZE (DEC)	DIMENSIONS A(MAX)	DIMENSIONS W(MAX)
141	8	.250	1.219	.478
108		.312	1.297	.590
129		.375		
142		.500	1.545	.833
130	6	.190	1.312	.503
109		.250		
131		.312	1.437	.623
110		.375		
143		.500	1.676	.833
144	4	.190	1.400	.628
111		.250		
132		.312	1.489	.648
112		.375		
145		.500	1.721	.833

219

TERMINAL, LUG, UNINSULATED, RECTANGULAR TONGUE, CRIMP STYLE, COPPER, TYPE I, CLASS 1
FOR 175°C TOTAL CONDUCTOR TEMPERATURE

MS21004

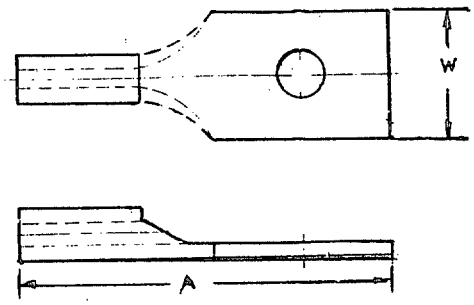

TABLE I. TYPE DESIGNATOR AND CHARACTERISTICS.

PART NUMBER MS21004-	WIRE SIZE AWG	STUD SIZE (DEC)	DIMENSIONS A(MAX)	DIMENSIONS W(MAX)
22	22-18	.086	.759	.182
1		.112	.826	.237
2		.125	.858	.277
3		.164	1.040	.302
4		.138		.302
5		.112	.980	.237
6		.138		.237
7		.164	1.290	.390
8	16-14	.112	.889	.237
9		.125	.921	.277
10		.164	1.075	.302
11		.138		.302
12		.112	1.043	.237
13		.138		.237
14		.164	1.294	.390
15	12-10	.112	1.014	.237
16		.125	1.146	.277
17		.164	1.200	.302
18		.138		.302
19		.112	1.168	.237
20		.138		.237
21		.164	1.419	.390

TERMINAL, LUG, CRIMP STYLE, COPPER, INSULATED, RING TONGUE, BELL-MOUTHED, TYPE II, CLASS 1, FOR 105°C TOTAL CONDUCTOR TEMPERATURE

MS25036

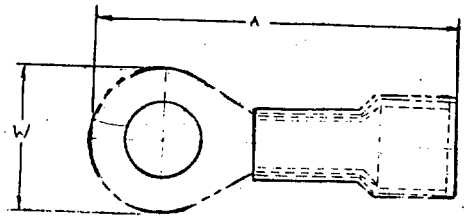

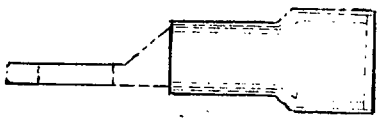

TABLE I. TYPE DESIGNATOR AND CHARACTERISTICS.

PART NUMBER MS25036-	WIRE SIZE AWG	STUD SIZE (DEC)	DIMENSIONS A(MAX)	DIMENSIONS W(MAX)	INSULATION SLEEVE COLOR
143	26-24	.086	.740	.210	YELLOW
144		.112	.755	.260	
145		.138	.855		
146		.164		.330	
147		.190	.865		
159	22-18	.086	.755	.230	RED
148		.112			
101		.138			
102			.865	.260	
149		.164	.910	.320	
103		.190	1.090		
150		.250		.473	
104		.3125			
105		.375	1.320	.540	
151		.500		.720	
152	16-14	.112	.774	.260	BLUE
106		.138			
107			.910	.317	
153		.164			
108		.190	.915		
154		.250	1.085	.473	

221

TERMINAL, LUG, CRIMP STYLE, COPPER, INSULATED, RING TONGUE, BELL-MOUTHED, TYPE II, CLASS 1, FOR 105°C TOTAL CONDUCTOR TEMPERATURE

MS25036

TABLE I. TYPE DESIGNATOR AND CHARACTERISTICS (CONT.)

PART NUMBER MS25036-	WIRE SIZE AWG	STUD SIZE (DEC)	DIMENSIONS A(MAX)	DIMENSIONS W(MAX)	INSULATION SLEEVE COLOR
109	16-14	.3125	1.085	.473	BLUE
110		.375	1.225	.540	
155		.500	1.320	.720	
111	12-10	.138	1.120	.380	YELLOW
156		.164			
112		.190			
157		.250	1.322	.536	
113		.3125			
114		.375	1.414	.598	
158		.500		.720	
115	8	.190	1.402	.429	RED
116		.250	1.466	.478	
117		.3125	1.544	.590	
118		.375			
119	6	.190	1.599	.503	BLUE
120		.250			
121		.3125	1.762	.623	
122		.375			
123	4	.250	1.812	.570	YELLOW
124		.3125	1.879	.648	
125		.375			
126	2	.250	2.069	.711	RED
127		.375			
128		.500	2.269	.804	
129	1	.250	2.150	.783	CLEAR TO WHITE BLUE
130		.375			
131		.500	2.370	.887	
132	0	.250	2.401	.853	
133		.375			
134		.500	2.525	.903	
135	00	.3125	2.750	.956	YELLOW
136		.375			
137		.500			
138	000	.375	3.000	1.053	RED
139		.500			
140	0000	.375	3.330	1.148	BLUE
141		.500			

TERMINALS, ELECTRICAL LUG, CRIMP-STYLE

TYPES CLC, AND CLCG

MIL-T-16366

SCOPE: THIS SECTION COVERS ELECTRICAL CRIMP-STYLE LUG TERMINALS USED FOR ELECTRICAL CABLE CONNECTIONS.

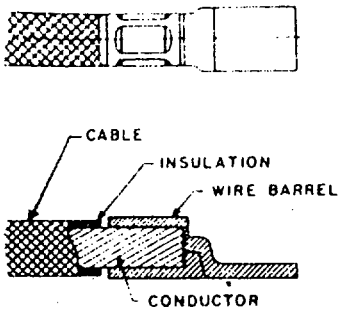

FIGURE 1. TYPE CLC
NON-WATERTIGHT LUG TERMINAL TYPICAL

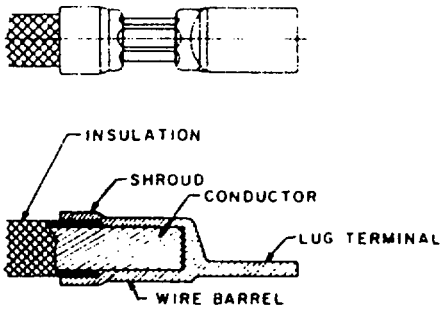

FIGURE 2. TYPE CLCG
WATERTIGHT LUG TERMINAL TYPICAL

TERMINALS, ELECTRICAL LUG, CRIMP-STYLE,
TYPES CLC, AND CLCG

MIL-T-16366

TYPE CLC TABLE I.

NO. ON LUG TERMINAL	STD CABLE SIZE DESIGNATION	RATING (MAX)	DIMENSIONS			
			ONE BOLT HOLE		TWO BOLT HOLES	
			DIA. (NOM)	LENGTH (MAX)	DIA. (NOM)	LENGTH (MAX)
14	14 (7)	92	9/32	1-3/8	9/32	---
23	23 (7)	117	9/32	1-3/8	9/32	---
30	30 (19)	142	9/32	1-7/8	9/32	2-9/16
40	40 (19)	165	9/32	1-7/8	9/32	2-3/8
50	50 (19)	189	11/32	2-1/16	5/16	2-13/16
60	60 (37)	215	11/32	2-1/16	5/16	2-3/4
75	75 (37)	253	11/32	2-1/8	11/32	2-15/16
100	100 (61)	300	11/32	2-1/8	11/32	2-7/8
125	125 (61)	345	9/16	2-3/8	11/32	3
150	150 (61)	400	9/16	2-3/4	3/8	3-7/16
200	200 (61)	465	9/16	2-7/8	3/8	3-9/16
250	250 (61)	540	9/16	3	7/16	3-7/16
300	300 (91)	595	9/16	3-9/16	7/16	3-7/16
400	400 (127)	740	9/16	3-13/16	7/16	4-5/8
500	500 (127)	860	11/16	4-5/16	7/16	4-13/16
650	650 (127)	1000	11/16	5-1/4	7/16	5-11/16
800	800 (127)	1190	11/16	5-5/8	7/16	6-11/16
1000	1000 (127)	1375	13/16	6	9/16	6-7/8
1600	1600 (127)	1800	13/16	6-1/2	9/16	7-1/4

TABLE II. DESIGNATION AND LENGTH OF TYPE CLCG TERMINALS
LUG, CABLE, CRIMP WITH WATER SEAL INSULATION GRIP (SINGLE
CONDUCTOR PROPULSION CABLE ONLY).

CABLE TYPE	MAX LENGTH
SSGU-300	4-13/16
SSGU-400	5-1/8
SSGU-650	8-7/16
SSGU-800	9-1/8

ADAPTER, BATTERY TERMINAL (STORAGE BATTERY)

MS75004

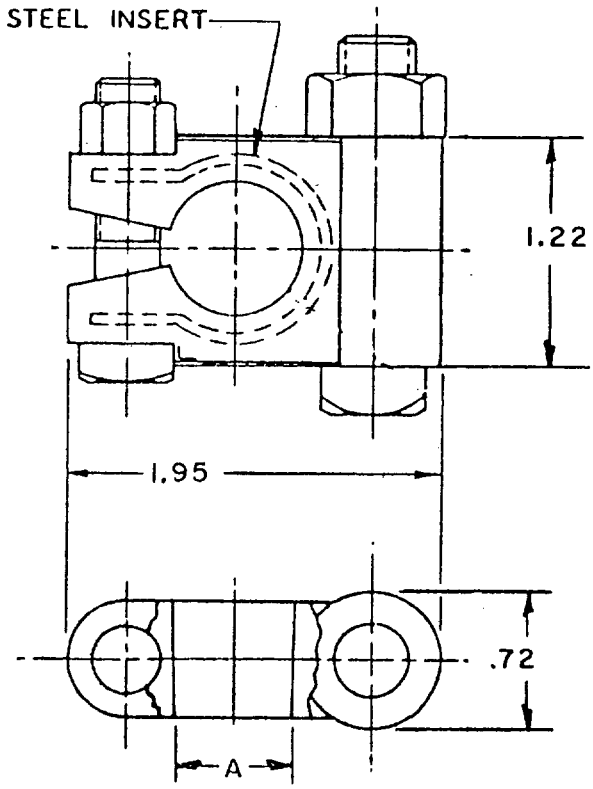

TABLE I. TYPE DESIGNATOR AND CHARACTERISTICS.

PART NUMBER	DIMENSIONS A(MAX)	TERMINAL DESIGNATOR
MS75004-1	.695	POSITIVE
MS75004-2	.633	NEGATIVE

TERMINAL, LUG, CRIMP STYLE, COPPER, INSULATED(SERVO-COMPONENTS) TYPE II, CLASS 1
FOR 125°C TOTAL CONDUCTOR TEMPERATURE

MS17182

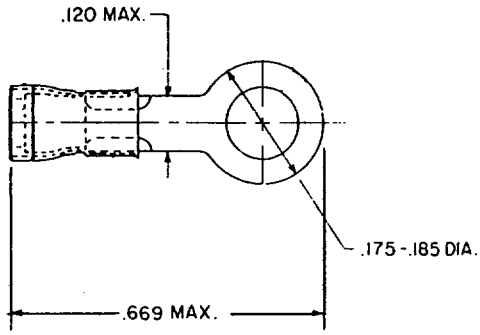

WIRE SIZE 22-18
MS17182-1

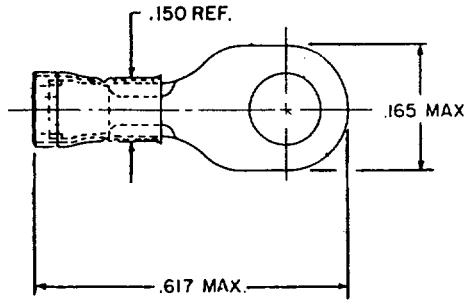

WIRE SIZE 26-24
MS17182-2

SCREWS

MIL-F-18240

SCOPE: THIS SECTION COVERS SCREWS COVERED BY MIL-F-18240. THESE MS SHEETS ARE MS21090, MS21093, MS21262, AND MS21295. SEE PAGES 353.1 THRU .3. THESE BOLTS ARE INTENDED FOR USAGE THROUGHOUT THE DEPARTMENT OF THE NAVY.

PART NUMBER EXAMPLE: SEE PAGE 353.1

SCREW, SELF-LOCKING, 250° F, STEEL, 55 KSI FTU, PAN HEAD, CROSS RECESSED

MS21090

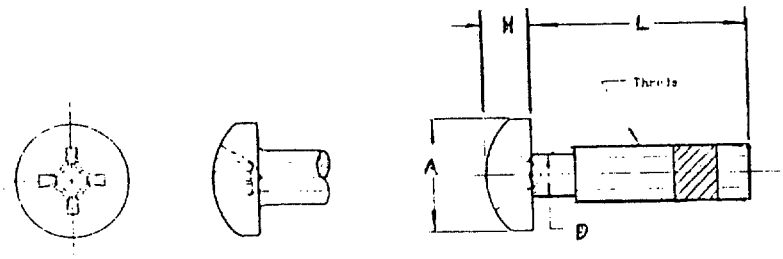

TABLE I. DIMENSIONS AND CHARACTERISTICS

PART NO. * MS21090- L	THREAD	DIMENSIONS D DIA MAX	A DIA MAX	H MAX	ULT. TENSILE STRENGTH LBS-MIN
04	4-40UNC-2A	.1120	.219	.080	330
06	6-32UNC-2A	.1380	.270	.097	500
08	8-32UNC-2A	.1640	.322	.115	770
3	10-32UNF-2A	.1900	.373	.133	1100
4	1/4-28UNF-2A	.2500	.492	.175	2000
5	5/16-24UNF-2A	.3125	.615	.218	3200

* SEE TABLE A, MIL-F-18240
LENGTH - SEE MS21090

SCREW, SELF-LOCKING, 250° F, STEEL, 55 KSI FTU, 100 FLAT HEAD, CROSS RECESSED

MS21093

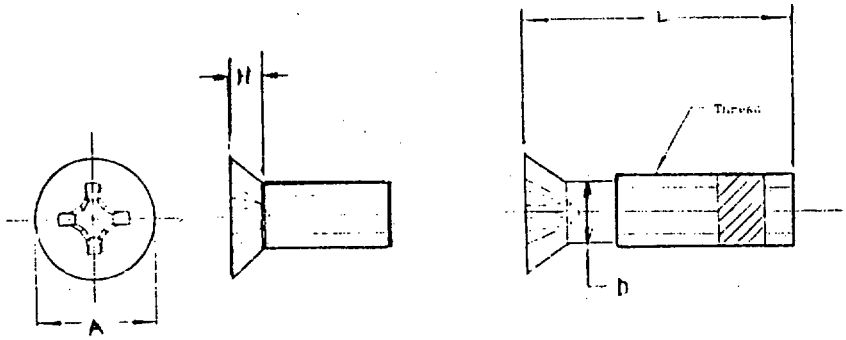

TABLE I. DIMENSIONS AND CHARACTERISTICS

PART NO. * MS21093- L	THREAD	DIMENSIONS D DIA MAX	A DIA MAX	H MAX	ULT. TENSILE STRENGTH LBS-MIN
02	2-56UNC-2A	.0860	.182	.043	200
04	4-40UNC-2A	.1120	.225	.048	380
06	6-32UNC-2A	.1380	.279	.060	545
08	8-32UNC-2A	.1640	.332	.072	770
3	10-32UNF-2A	.1900	.385	.083	1000
4	1/4-28UNF-2A	.2500	.507	.110	2000
5	5/16-24UNF-2A	.3125	.635	.138	3200
6	3/8-24UNF-2A	.3750	.762	.165	4830

* SEE TABLE A, MIL-F-18240
LENGTH - SEE MS21093

SCREWS, SELF-LOCKING, 250° F, CYLINDRICAL HEAD, HEXAGONAL WRENCHING SOCKET, ALLOY STEEL, 160 KSI FTU (SOCKET HEAD CAP SCREWS)

MS21262

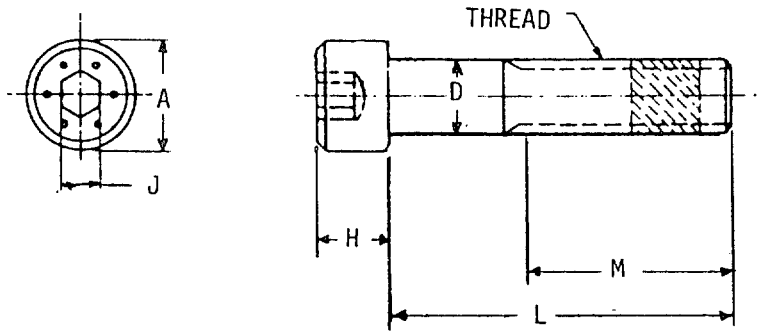

TABLE I. DIMENSIONS AND CHARACTERISTICS

PART NO. * MS21262- L	THREAD	DIMENSIONS D DIA MAX MIN	A DIA MAX MIN	M MIN	H MAX MIN	J MAX MIN	ULTIMATE TENSILE STRENGTH LBS-MIN
04	#4-40UNC-3A	.1120	.183		.112	.0952	
		.1075	.176	.750	.108	.0937	960
06	#6-32UNC-3A	.1380	.226		.138	.1111	
		.1329	.218	.750	.134	.1094	1450
08	#8-32UNC-3A	.1640	.270		.164	.1426	
		.1585	.262	.875	.159	.1406	2280
3	#10-32UNF-3A	.1900	.312		.190	.1587	
		.1840	.303	.875	.185	.1562	3200
4	1/4-28UNF-3A	.2500	.375		.250	.1900	
		.2435	.365	1.000	.244	.1875	5820
5	5/16-24UNF-3A	.3125	.468		.312	.2530	
		.3053	.457	1.125	.306	.2500	9280
6	3/8-24UNF-3A	.3750	.562		.375	.3160	
		.3678	.550	1.250	.368	.3125	14000
7	7/16-20UNF-3A	.4375	.656		.437	.3790	
		.4294	.642	1.375	.430	.3750	18960
8	1/2-20UNF-3A	.5000	.750		.500	.3790	
		.4919	.735	1.500	.492	.3750	25600

* SEE TABLE A, MIL-F-18240
LENGTH - SEE MS21262

SCREWS, SELF-LOCKING, 250° F, CYLINDRICAL HEAD, HEXAGONAL WRENCHING SOCKET, CORROSION RESISTING STEEL, 80 KSI FTU (SOCKET HEAD CAP SCREWS)

MS21295

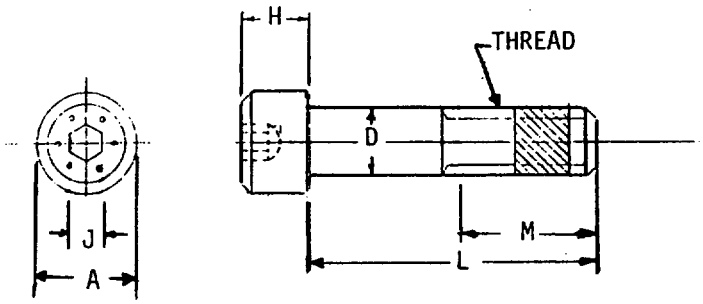

TABLE I. DIMENSIONS AND CHARACTERISTICS

PART NO. * MS21295- L	THREAD	DIMENSIONS D DIA MAX MIN	A DIA MAX MIN	M MIN	H MAX MIN	J MAX MIN	ULTIMATE TENSILE STRENGTH LBS-MIN
04	#4-40UNC-3A	.1120	.183		.112	.0952	
		.1075	.176	.750	.108	.0937	480
06	#6-32UNC-3A	.1380	.226		.138	.1111	
		.1329	.218	.750	.134	.1094	720
08	#8-32UNC-3A	.1640	.270		.164	.1426	
		.1585	.262	.875	.159	.1406	1120
3	#10-32UNF-3A	.1900	.312		.190	.1587	
		.1840	.303	.875	.185	.1562	1600
4	1/4-28UNF-3A	.2500	.375		.250	.1900	
		.2435	.365	1.000	.244	.1875	2910
5	5/16-24UNF-3A	.3125	.468		.312	.2530	
		.3053	.457	1.125	.306	.2500	4640
6	3/8-24UNF-3A	.3750	.562		.375	.3160	
		.3678	.550	1.250	.368	.3125	7020
7	7/16-20UNF-3A	.4375	.656		.437	.3790	
		.4294	.642	1.375	.430	.3750	9490
8	1/2-20UNF-3A	.5000	.750		.500	.3790	
		.4919	.735	1.500	.492	.3750	12290

* SEE TABLE A, MIL-F-18240
LENGTH - SEE MS21295

SCREWS

SCOPE: THIS SECTION COVERS MISCELLANEOUS TYPES OF SCREWS, SUCH AS CAP, SOCKET, MACHINE, PAN HEAD, FLAT, AND COUNTERSUNK. THE MATERIAL OF WHICH THESE SCREWS ARE COMPOSED IS CRS (CORROSION RESISTANT STEEL). THESE SCREWS ARE INTENDED FOR USAGE THROUGHOUT THE DEPARTMENT OF THE NAVY.

PART NUMBER EXAMPLE: SEE EACH MILITARY STANDARD

235

SCREW, CAP, SOCKET HEAD-HEXAGON, CORROSION RESISTING STEEL, UNC-3A

MS16995

PART NUMBER EXAMPLE: MS16995-1B

MS16995 -1 B

MILITARY STANDARD

DASH NUMBER

COATING " " = PASSIVATED
"B" = BLACK OXIDE

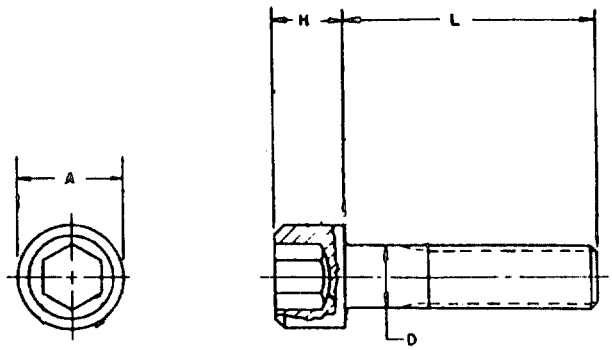

TABLE I. PART NUMBERS AND CHARACTERISTICS

PART NUMBER MS16995	L	NOMINAL SIZE	THREADS PER INCH	DIMENSIONS (MAX) D	A	H	TENSILE STRENGTH MIN
-1 -2 -3 -4	3/16 1/4 3/8 1/2	#2	56UNC-3A	.0860	.140	.086	300
-9 -10 -11	1/4 3/8 1/2	#4	40UNC-3A	.1120	.183	.112	480
-16 -17 -18 -19 -20	1/4 3/8 1/2 5/8 3/4	#6	32UNC-3A	.1380	.226	.138	730

SCREW, CAP, SOCKET HEAD-HEXAGON, CORROSION RESISTING STEEL, UNC-3A

MS16995

TABLE I. PART NUMBERS AND CHARACTERISTICS (CONT.)

PART NUMBER MS16995	L	NOMINAL SIZE	THREADS PER INCH	DIMENSIONS (MAX) D	A	H	TENSILE STRENGTH MIN
-25	3/8	#8	32UNC-3A	.1640	.270	.164	1120
-26	1/2						
-27	5/8						
-28	3/4						
-29	7/8						
-30	1						
-35	3/8	#10	24UNC-3A	.1900	.313	.190	1400
-36	1/2						
-37	5/8						
-38	3/4						
-39	7/8						
-40	1						
-41	1-1/4						
-42	1-1/2						
-47	3/8	1/4	20UNC-3A	.2500	.375	.250	2540
-48	1/2						
-49	5/8						
-50	3/4						
-51	7/8						
-52	1						
-53	1-1/4						
-54	1-1/2						
-55	1-3/4						
-56	2						
-61	3/8	5/16	18UNC-3A	.3125	.469	.313	4190
-62	1/2						
-63	5/8						
-64	3/4						
-65	7/8						
-66	1						
-67	1-1/4						
-68	1-1/2						
-69	1-3/4						
-70	2						
-71	2-1/4						
-72	2-1/2						
-77	1/2	3/8	16UNC-3A	.3750	.563	.375	6200
-78	5/8						
-79	3/4						
-80	7/8						
-81	1						

SCREW, CAP, SOCKET HEAD-HEXAGON, CORROSION RESISTING STEEL, UNC-3A

MS16995

TABLE I. PART NUMBERS AND CHARACTERISTICS (CONT.)

PART NUMBER MS16995	L	NOMINAL SIZE	THREADS PER INCH	DIMENSIONS (MAX)			TENSILE STRENGTH MIN
				D	A	H	
-82	1-1/4	3/8	16UNC-3A	.3750	.563	.375	6200
-83	1-1/2						
-84	1-3/4						
-85	2						
-86	2-1/4						
-87	2-1/2						
-92	3/4	1/2	13UNC-3A	.5000	.750	.500	11300
-93	7/8						
-94	1						
-95	1-1/4						
-96	1-1/2						
-97	1-3/4						
-98	2						
-99	2-1/4						
-100	2-1/2						
-101	2-3/4						
-102	3						
-107	1	5/8	11UNC-3A	.6250	.938	.625	18100
-108	1-1/4						
-109	1-1/2						
-110	1-3/4						
-111	2						
-112	2-1/4						
-113	2-1/2						
-114	2-3/4						
-115	3						

SCREW, CAP, SOCKET HEAD-HEXAGON, CORROSION RESISTING STEEL, UNF-3A

MS16996

PART NUMBER EXAMPLE: MS16996-1B

MS16996 -1 B

MILITARY STANDARD

DASH NUMBER

COATING " " = PASSIVATED
"B" = BLACK OXIDE

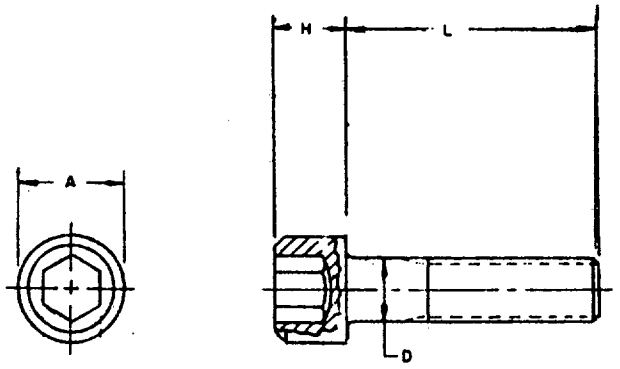

TABLE I. PART NUMBERS AND CHARACTERISTICS

PART NUMBER MS16995	L	NOMINAL SIZE	THREADS PER INCH	DIMENSIONS (MAX)			TENSILE STRENGTH MIN
				D	A	H	
-1 -2 -3 -4	1/8 3/16 1/4 1/2	#0	80UNF-3A	.0600	.096	.060	140
-9 -10 -11 -12 -13 -14 -15 -16	3/8 1/2 5/8 3 4 7/8 1 1-1/4 1-1/2	#10	32UNF-3A	.1900	.313	.190	1600

SCREW, CAP, SOCKET HEAD-HEXAGON, CORROSION RESISTING STEEL, UNF-3A

MS16996

TABLE I. PART NUMBERS AND CHARACTERISTICS (CONT.)

PART NUMBER MS16995	L	NOMINAL SIZE	THREADS PER INCH	DIMENSIONS (MAX)			TENSILE STRENGTH MIN
				D	A	H	
-21 -22 -23 -24 -25 -26	1/2 5/8 3/4 1 1-1/4 1-1 2	1/4	28UNF-3A	.2500	.375	.250	2910
-31 -32 -33 -34	3/4 1 1-1/4 1-1/2	5/16	24UNF-3A	.3125	.469	.313	4640
-39 -40 -41 -42	3/4 1 1-1/4 1-1/2	3/8	24UNF-3A	.3750	.563	.375	7020

SCREW, CAP, HEXAGON HEAD (FINISHED HEXAGON BOLT), STEEL, CORROSION RESISTING, PASSIVATED, UNC-2A

MS35307

PART NUMBER EXAMPLE: MS35307-302

MS35307 -302

MILITARY STANDARD

DASH NUMBER

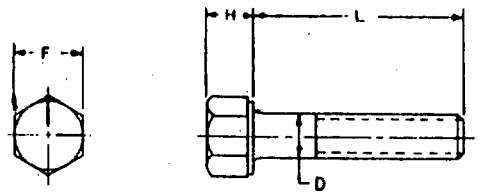

TABLE I. PART NUMBERS AND CHARACTERISTICS

PART NUMBER MS35307	L	NOMINAL SIZE	THREADS PER INCH	DIMENSIONS (MAX)			TENSILE STRENGTH MIN
				D	F	H	
-301	.375	1/4	20UNC-2A	.2500	.4375	.1630	2540
-302	.438						
-303	.500						
-304	.562						
-305	.625						
-306	.750						
-307	.875						
-308	1.000						
-309	1.125						
-310	1.250						
-311	1.375						
-312	1.500						
-313	1.750						
-314	2.000						
-315	2.250						
-316	2.500						
-317	2.750						
-318	3.000						

611.7

SCREW, CAP, HEXAGON HEAD (FINISHED HEXAGON BOLT), STEEL, CORROSION RESISTING, PASSIVATED, UNC-

MS35307

TABLE I. PART NUMBERS AND CHARACTERISTICS (CONT.)

PART NUMBER MS35307	L	NOMINAL SIZE	THREADS PER INCH	DIMENSIONS (MAX)			TENSILE STRENGTH MIN
				D	F	H	
-319	3.250	1/4	20UNC-2A	.2500	.4375	.1630	2540
-320	3.500						
-321	3.750						
-322	4.000						
-323	4.250						
-324	4.500						
-325	4.750						
-326	5.000						
-327	.375	5/16	18UNC-2A	.3125	.5000	.2110	4190
-328	.438						
-329	.500						
-330	.562						
-331	.625						
-332	.750						
-333	.875						
-334	1.000						
-335	1.125						
-336	1.250						
-337	1.375						
-338	1.500						
-339	1.750						
-340	2.000						
-341	2.250						
-342	2.500						
-343	2.750						
-344	3.000						
-345	3.250						
-346	3.500						
-347	3.750						
-348	4.000						
-349	4.250						
-350	4.500						
-351	4.750						
-352	5.000						
-353	.375	3/8	16UNC-2A	.3750	.5625	.2430	6200
-354	.438						
-355	.500						
-356	.562						
-357	.625						
-358	.750						
-359	.875						
-360	1.000						

SCREW, CAP, HEXAGON HEAD (FINISHED HEXAGON BOLT), STEEL, CORROSION RESISTING, PASSIVATED, UNC-2A

MS35307

TABLE I. PART NUMBERS AND CHARACTERISTICS (CONT.)

PART NUMBER MS35307	L	NOMINAL SIZE	THREADS PER INCH	DIMENSIONS (MAX)			TENSILE STRENGTH MIN
				D	F	H	
-361	1.125	3/8	16UNC-2A	.3750	.5625	.2430	6200
-362	1.250						
-363	1.375						
-364	1.500						
-365	1.750						
-366	2.000						
-367	2.250						
-368	2.500						
-369	2.750						
-370	3.000						
-371	3.250						
-372	3.500						
-373	3.750						
-374	4.000						
-375	4.250						
-376	4.500						
-377	4.750						
-378	5.000						
-379	.438	7/16	14UNC-2A	.4375	.6250	.2910	8500
-380	.500						
-381	.562						
-382	.625						
-383	.750						
-384	.875						
-385	1.000						
-386	1.125						
-387	1.250						
-388	1.375						
-389	1.500						
-390	1.750						
-391	2.000						
-392	2.250						
-393	2.500						
-394	2.750						
-395	3.000						
-396	3.250						
-397	3.500						
-398	3.750						
-399	4.000						
-400	4.250						
-401	4.500						
-402	4.750						
-403	5.000						

Eh 8

SCREW, CAP, HEXAGON HEAD (FINISHED HEXAGON BOLT), STEEL, CORROSION RESISTING, PASSIVATED, UNC-2A

MS35307

TABLE I. PART NUMBERS AND CHARACTERISTICS (CONT.)

PART NUMBER MS35307	L	NOMINAL SIZE	THREADS PER INCH	DIMENSIONS (MAX)			TENSILE STRENGTH MIN
				D	F	H	
-404	.500	1/2	13UNC-2A	.5000	.7500	.3210	11300
-405	.562						
-406	.625						
-407	.750						
-408	.875						
-409	1.000						
-410	1.125						
-411	1.250						
-412	1.375						
-413	1.500						
-414	1.750						
-415	2.000						
-416	2.250						
-417	2.500						
-418	2.750						
-419	3.000						
-420	3.250						
-421	3.500						
-422	3.750						
-423	4.000						
-424	4.250						
-425	4.500						
-426	4.750						
-427	5.000						
-428	5.500						
-429	6.000						
-430	.562	9/16	12UNC-2A	.5620	.8125	.3710	14500
-431	.625						
-432	.750						
-433	.875						
-434	1.000						
-435	1.125						
-436	1.250						
-437	1.375						
-438	1.500						
-439	1.750						
-440	2.000						
-441	2.250						
-442	2.500						
-443	2.750						
-444	3.000						

SCREW, CAP, HEXAGON HEAD (FINISHED HEXAGON BOLT), STEEL, CORROSION RESISTING, PASSIVATED, UNC-2A

MS35307

TABLE I. PART NUMBERS AND CHARACTERISTICS (CONT.)

PART NUMBER MS35307	L	NOMINAL SIZE	THREADS PER INCH	DIMENSIONS (MAX)			TENSILE STRENGTH MIN
				D	F	H	
-445	3.250	9/16	12UNC-2A	.5625	.8125	.3710	14500
-446	3.500						
-447	3.750						
-448	4.000						
-449	4.250						
-450	4.500						
-451	4.750						
-452	5.000						
-453	5.500						
-454	6.000						
-455	.625	5/8	11UNC-2A	.6250	.9375	.4030	18500
-456	.750						
-457	.875						
-458	1.000						
-459	1.125						
-460	1.250						
-461	1.375						
-462	1.500						
-463	1.750						
-464	2.000						
-465	2.250						
-466	2.500						
-467	2.750						
-468	3.000						
-469	3.250						
-470	3.500						
-471	3.750						
-472	4.000						
-473	4.250						
-474	4.500						
-475	4.750						
-476	5.000						
-477	5.500						
-478	6.000						
-479	.750	3/4	10UNC-2A	.7500	1.1250	.4830	23350
-480	.875						
-481	1.000						
-482	1.125						
-483	1.250						
-484	1.375						
-485	1.500						
-486	1.750						

SCREW, CAP, HEXAGON HEAD (FINISHED HEXAGON BOLT), STEEL, CORROSION RESISTING, PASSIVATED, UNC-

MS35307

TABLE I. PART NUMBERS AND CHARACTERISTICS (CONT.)

PART NUMBER MS35307	L	NOMINAL SIZE	THREADS PER INCH	DIMENSIONS (MAX)			TENSILE STRENGTH MIN
				D	F	H	
-487	2.000	3/4	10UNC-2A	.7500	1.1250	.4830	23350
-488	2.250						
-489	2.500						
-490	2.750						
-491	3.000						
-492	3.250						
-493	3.500						
-494	3.750						
-495	4.000						
-496	4.250						
-497	4.500						
-498	4.750						
-499	5.000						
-500	5.500						
-501	6.000						
-502	.875	7/8	9UNC-2A	.8750	1.3125	.5630	32300
-503	1.000						
-504	1.125						
-505	1.250						
-506	1.375						
-507	1.500						
-508	1.750						
-509	2.250						
-510	2.375						
-511	2.500						
-512	2.750						
-513	3.000						
-514	3.250						
-515	3.500						
-516	3.750						
-517	4.000						
-518	4.250						
-519	4.500						
-520	4.750						
-521	5.000						
-522	5.500						
-523	6.000						

SCREW, CAP, HEXAGON HEAD (FINISHED HEXAGON BOLT), STEEL, CORROSION RESISTING, PASSIVATED, UNC-2A

MS35307

TABLE I. PART NUMBERS AND CHARACTERISTICS (CONT.)

PART NUMBER MS35307	L	NOMINAL SIZE	THREADS PER INCH	DIMENSIONS (MAX)			TENSILE STRENGTH MIN
				D	F	H	
-524	1.000	1	8UNC-2A	1.0000	1.5000	.6270	42400
-525	1.125						
-526	1.250						
-527	1.375						
-528	1.500						
-529	1.750						
-530	2.000						
-531	2.250						
-532	2.250						
-533	2.500						
-534	2.750						
-535	3.250						
-536	3.500						
-537	3.750						
-538	4.000						
-539	4.250						
-540	4.500						
-541	4.750						
-542	5.000						
-543	5.500						
-544	6.000						
-545	1.125	1-1/8	7UNC-2A	1.1250	1.6875	.7180	53400
-546	1.250						
-547	1.375						
-548	1.500						
-549	1.750						
-550	2.000						
-551	2.250						
-552	2.500						
-553	2.750						
-554	3.000						
-555	3.250						
-556	3.500						
-557	3.750						
-558	4.000						
-559	4.250						
-560	4.500						
-561	4.750						
-562	5.000						
-563	5.500						
-564	6.000						

SCREW, CAP, HEXAGON HEAD (FINISHED HEXAGON BOLT), STEEL, CORROSION RESISTING, PASSIVATED, UNC-

MS35307

TABLE I. PART NUMBERS AND CHARACTERISTICS (CONT.)

PART NUMBER MS35307	L	NOMINAL SIZE	THREADS PER INCH	DIMENSIONS (MAX)			TENSILE STRENGTH MIN
				D	F	H	
-565	1.250	1-1/4	7UNC-2A	1.2500	1.8750	.8130	67800
-566	1.375						
-567	1.500						
-568	1.750						
-569	2.000						
-570	2.250						
-571	2.500						
-572	2.750						
-573	3.000						
-574	3.250						
-575	3.500						
-576	3.750						
-577	4.000						
-578	4.250						
-579	4.500						
-580	4.750						
-581	5.000						
-582	5.500						
-583	6.000						

SCREW, MACHINE-PAN HEAD, CROSS-RECESSED, CORROSION RESISTING STEEL, UNC-2A

MS51957

PART NUMBER EXAMPLE: MS51957-1B

MS51957 -1 B

MILITARY STANDARD

DASH NUMBER

COATING " " = PASSIVATED
"B" = BLACK OXIDE

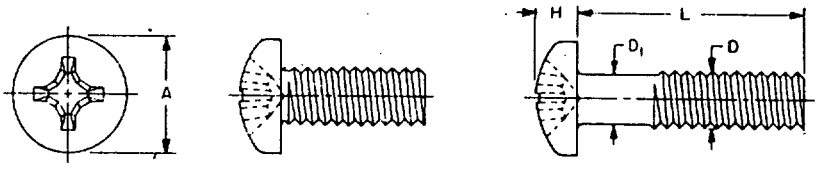

TABLE I. PART NUMBERS AND CHARACTERISTICS

PART NUMBER MS51957	L	D NOMINAL SIZE	THREADS PER INCH	DIMENSIONS (MAX)			TENSILE STRENGTH MIN
				D1	A	H	
-1	1/8	#2	56UNC-2A	.0860	.167	.062	300
-2	3/16						
-3	1/4						
-4	5/16						
-5	3/8						
-6	7/16						
-7	1/2						
-8	5/8						
-9	3/4						
-10	7/8						

SCREW, MACHINE-PAN HEAD, CROSS-RECESSED, CORROSION RESISTING STEEL, UNC-2A

MS51957

TABLE I. PART NUMBERS AND CHARACTERISTICS (CONT.)

PART NUMBER MS51957	L	D NOMINAL SIZE	THREADS PER INCH	DIMENSIONS (MAX)			TENSILE STRENGTH MIN
				D1	A	H	
-11	1/8	#4	40UNC-2A	.1120	.219	.080	480
-12	3/16						
-13	1/4						
-14	5/16						
-15	3/8						
-16	7/16						
-17	1/2						
-18	5/8						
-19	3/4						
-20	7/8						
-21	1						
-122	1-3/8						
-23	1-1/2						
-24	1/8	#6	32UNC-2A	.1380	.270	.097	730
-25	3/16						
-26	1/4						
-27	5/16						
-28	3/8						
-29	7/16						
-30	1/2						
-31	5/8						
-32	3/4						
-33	7/8						
-34	1						
-35	1-1/4						
-36	1-1/2						
-37	1-3/4						
-38	2						
-39	1/8	#8	32UNC-2A	.1640	.322	.115	1120
-40	3/16						
-41	1/4						
-42	5/16						
-43	3/8						
-44	7/16						
-45	1/2						
-46	5/8						
-47	3/4						
-48	7/8						
-49	1						
-50	1-1/4						

SCREW, MACHINE-PAN HEAD, CROSS-RECESSED, CORROSION RESISTING STEEL, UNC-2A

MS51957

TABLE I. PART NUMBERS AND CHARACTERISTICS (CONT.)

PART NUMBER MS51957	L	D NOMINAL SIZE	THREADS PER INCH	DIMENSIONS (MAX)			TENSILE STRENGTH MIN
				D1	A	H	
-51	1-1/2	#8	32UNC-2A	.1640	.322	.115	1120
-52	1-3/4						
-53	2						
-54	2-1/4						
-55	2-1/2						
-56	2-3/4						
-57	3						
-59	1/4	#10	24UNC-2A	.1900	.373	.133	1400
-60	5/16						
-61	3/8						
-62	7/16						
-63	1/2						
-64	5/8						
-65	3/4						
-66	7/8						
-67	1						
-68	1-1/4						
-69	1-1/2						
-70	1-3/4						
-71	2						
-72	2-1/4						
-73	2-1/2						
-76	5/16	1/4	20UNC-2A	.2500	.492	.175	2540
-77	3/8						
-78	7/16						
-79	1/2						
-80	5/8						
-81	3/4						
-82	7/8						
-83	1						
-84	1-1/4						
-85	1-1/2						
-86	1-3/4						
-87	2						
-88	2-1/4						
-89	2-1/2						

251

SCREW, MACHINE-PAN HEAD, CROSS-RECESSED, CORROSION RESISTING STEEL, UNC-2A

MS51957

TABLE I. PART NUMBERS AND CHARACTERISTICS (CONT.)

PART NUMBER MS51957	L	D NOMINAL SIZE	THREADS PER INCH	DIMENSIONS (MAX)			TENSILE STRENGTH MIN
				D1	A	H	
-92	3/8	5/16	18UNC-2A	.3125	.615	.218	4190
-93	7/16						
-94	1/2						
-95	5/8						
-96	3/4						
-97	7/8						
-98	1						
-99	1-1/4						
-100	1-1/2						
-101	1-3/4						
-102	2						
-103	2-1/4						
-104	2-1/2						
-107	1/2	3/8	16UNC-2A	.3750	.740	.261	6200
-108	5/8						
-109	3/4						
-110	7/8						
-111	1						
-112	1-1/4						
-113	1-1/2						
-114	1-3/4						
-115	2						
-116	2-1/4						
-117	2-1/2						
-118	2-3/4						
-119	3						

SCREW, MACHINE, PAN-HEAD, CROSS-RECESSED, CORROSION RESISTING STEEL, UNF-2A

MS51958

PART NUMBER EXAMPLE: MS51958-1B

MS51958 -1 B

MILITARY STANDARD

DASH NUMBER

COATING " " = CLEANED AND DESCALED
"B" = BLACK OXIDE

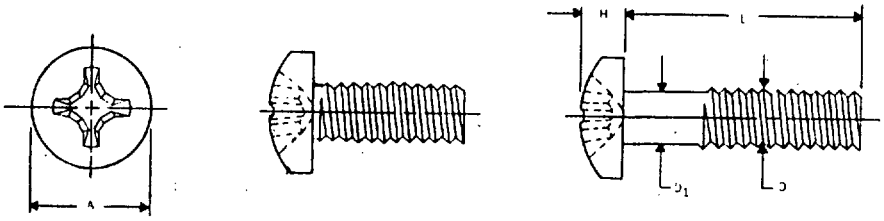

TABLE I. PART NUMBERS AND CHARACTERISTICS

PART NUMBER MS51958	L	D NOMINAL SIZE	THREADS PER INCH	DIMENSIONS (MAX)			TENSILE STRENGTH MIN
				D1	A	H	
-120	1/8	.060	80UNF-2A	.0600	.116	.044	140
-121	3/16						
-122	1/4						
-123	5/16						
-124	3/8						
-125	7/16						
-126	1/2						
-1	1/8	.086	64UNF-2A	.0860	.167	.062	310
-2	3/16						
-3	1/4						
-4	5/16						
-5	3/8						
-6	7/16						
-7	1/2						
-8	5/8						
-9	3/4						

SCREW, MACHINE, PAN-HEAD, CROSS-RECESSED, CORROSION RESISTING STEEL, UNF-2A

MS51958

TABLE I. PART NUMBERS AND CHARACTERISTICS (CONT.)

PART NUMBER MS51958	L	D NOMINAL SIZE	THREADS PER INCH	DIMENSIONS (MAX)			TENSILE STRENGTH MIN
				D1	A	H	
-11	1/8	.112	48UNF-2A	.1120	.219	.080	530
-12	3/16						
-13	1/4						
-14	5/16						
-15	3/8						
-16	7/16						
-17	1/2						
-18	5/8						
-19	3/4						
-20	7/8						
-21	1						
-24	1/8	.138	40UNF-2A	.1380	.270	.097	810
-25	3/16						
-26	1/4						
-27	5/16						
-28	3/8						
-29	1/16						
-30	1/2						
-31	5/8						
-32	3/4						
-33	7/8						
-34	1						
-35	1-1/4						
-36	1-1/2						
-37	1-3/4						
-38	2						
-39	1/8	.164	36UNF-2A	.1640	.322	.115	1180
-40	3/16						
-41	1/4						
-42	5/16						
-43	3/8						
-44	7/16						
-45	1/2						
-46	5/8						
-47	3/4						
-48	7/8						
-49	1						

SCREW, MACHINE, PAN-HEAD, CROSS-RECESSED, CORROSION RESISTING STEEL, UNF-2A

MS51958

TABLE I. PART NUMBERS AND CHARACTERISTICS (CONT.)

PART NUMBER MS51958	L	D NOMINAL SIZE	THREADS PER INCH	DIMENSIONS (MAX)			TENSILE STRENGTH MIN
				D1	A	H	
-50	1-1/4	.164	36UNF-2A	.1640	.322	.115	1180
-51	1-1/2						
-52	1-3/4						
-53	2						
-59	1/4	.190	32UNF-2A	.1900	.373	.133	1600
-60	5/16						
-61	3/8						
-62	7/16						
-63	1/2						
-64	5/8						
-65	3/4						
-66	7/8						
-67	1						
-68	1-1/4						
-69	1-1/2						
-70	1-3/4						
-71	2						
-72	2-1/4						
-73	2-1/2						
-76	5/16	.250	28UNF-2A	.2500	.492	.175	2910
-77	3/8						
-78	7/16						
-79	1/2						
-80	5/8						
-81	3/4						
-82	7/8						
-83	1						
-84	1-1/4						
-85	1-1/2						
-86	1-3/4						
-87	2						
-88	2-1/4						
-89	2-1/2						

SCREW, MACHINE, PAN-HEAD, CROSS-RECESSED, CORROSION RESISTING STEEL, UNF-2A

MS51958

TABLE I. PART NUMBERS AND CHARACTERISTICS (CONT.)

PART NUMBER MS51958	L	D NOMINAL SIZE	THREADS PER INCH	DIMENSIONS (MAX)			TENSILE STRENGTH MIN
				D1	A	H	
-92	3/8	.3125	24UNF-2A	.3125	.615	.218	4640
-93	7/16						
-94	1/2						
-95	5/8						
-96	3/4						
-97	7/8						
-98	1						
-99	1-1/4						
-100	1-1/2						
-101	1-3/4						
-102	2						
-103	2-1/4						
-104	2-1/2						
-107	1/2	.3750	24UNF-2A	.3750	.740	.261	7020
-108	5/8						
-109	3/4						
-110	7/8						
-111	1						
-112	1-1/4						
-113	1-1/2						
-114	1-3/4						
-115	2						
-116	2-1/4						
-117	2-1/2						
-118	2-3/4						
-119	3						

SCREW, MACHINE-FLAT COUNTERSUNK HEAD, 82 ,CROSS-RECESSED, CORROSION RESISTING STEEL, UNC-2A

MS51959

PART NUMBER EXAMPLE: MS51959-1B

MS51959 -1 B

MILITARY STANDARD

DASH NUMBER

COATING " " = PASSIVATED
"B" = BLACK OXIDE

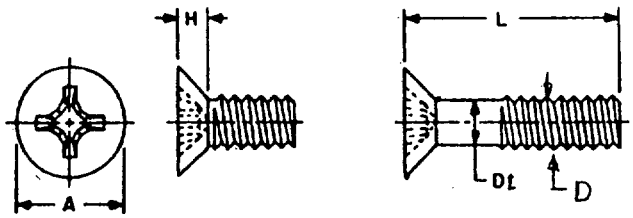

TABLE I. PART NUMBERS AND CHARACTERISTICS

PART NUMBER MS51959	L	D NOMINAL SIZE	THREADS PER INCH	DIMENSIONS (MAX)			TENSILE STRENGTH MIN
				D1	A	H	
-1	1/8	.086	56UNC-2A	.0860	.172	.051	300
-2	3/16						
-3	1/4						
-4	5/16						
-5	3/8						
-6	7/16						
-7	1/2						
-8	5/8						
-9	3/4						
-10	7/8						

611.23

SCREW, MACHINE-FLAT COUNTERSUNK HEAD, 82 ,CROSS-RECESSED, CORROSION RESISTING STEEL, UNC-2A

MS51959

TABLE I. PART NUMBERS AND CHARACTERISTICS (CONT.)

PART NUMBER MS51959	L	D NOMINAL SIZE	THREADS PER INCH	DIMENSIONS (MAX)			TENSILE STRENGTH MIN
				D1	A	H	
-11	1/8	.112	40UNC-2A	.1120	.225	.067	480
-12	3/16						
-13	1/4						
-14	5/16						
-15	3/8						
-16	7/16						
-17	1/2						
-18	5/8						
-19	3/4						
-20	7/8						
-21	1						
-22	1-1/4						
-23	1-1/2						
-24	1/8	.138	32UNC-2A	.1380	.279	.083	730
-25	3/16						
-26	1/4						
-27	5/16						
-28	3/8						
-29	7/16						
-30	1/2						
-31	5/8						
-32	3/4						
-33	7/8						
-34	1						
-35	1-1/4						
-36	1-1/2						
-37	1-3/4						
-38	2						
-39	1/8	.164	32UNC-2A	.1640	.332	.100	1120
-40	3/16						
-41	1/4						
-42	5/16						
-43	3/8						
-44	7/16						
-45	1/2						
-46	5/8						
-47	3/4						
-48	7/8						
-49	1						
-50	1-1/4						

SCREW, MACHINE-FLAT COUNTERSUNK HEAD, 82 , CROSS-RECESSED CORROSION RESISTING STEEL, UNC-2A

MS51959

TABLE I. PART NUMBERS AND CHARACTERISTICS (CONT.)

PART NUMBER MS51959	L	D NOMINAL SIZE	THREADS PER INCH	DIMENSIONS (MAX)			TENSILE STRENGTH MIN
				D1	A	H	
-51	1-1/2	.164	32UNC-2A	.1640	.332	.100	1120
-52	1-3/4						
-53	2						
-57	3						
-59	1/4	.190	24UNC-2A	.1900	.385	.116	1400
-60	5/16						
-61	3/8						
-62	7/16						
-63	1/26						
-64	5/8						
-65	3/4						
-66	7/8						
-67	1						
-68	1-1/4						
-69	1-1/2						
-70	1-3/4						
-71	2						
-72	2-1/4						
-73	2-1/2						
-76	5/16	.250	20UNC-2A	.2500	.507	.153	2540
-77	3/8						
-78	7/16						
-79	1/26						
-80	5/8						
-81	3/4						
-82	7/8						
-83	1						
-84	1-1/4						
-85	1-1/2						
-86	1-3/4						
-87	2						
-88	2-1/4						
-89	2-1/2						

SCREW, MACHINE-FLAT COUNTERSUNK HEAD, 82 , CROSS-RECESSED CORROSION RESISTING STEEL, UNC-2A

MS51959

TABLE I. PART NUMBERS AND CHARACTERISTICS (CONT.)

PART NUMBER MS51959	L	D NOMINAL SIZE	THREADS PER INCH	DIMENSIONS (MAX)			TENSILE STRENGTH MIN
				D1	A	H	
-92	3/8	.3125	18UNC-2A	.3125	.635	.191	4190
-93	7/16						
-94	1/2						
-95	5/8						
-96	3/4						
-97	7/8						
-98	1						
-99	1-1/4						
-100	1-1/2						
-101	1-3/4						
-102	2						
-103	2-1/4						
-104	2-1/2						
-107	1/2	.375	16UNC-2A	.3750	.762	.230	9200
-108	5/8						
-109	3/4						
-110	7/8						
-111	1						
-112	1-1/4						
-113	1-1/2						
-114	1-3/4						
-115	2						
-116	2-1/4						
-117	2-1/2						
-118	2-3/4						
-119	3						

SCREW, MACHINE-FLAT COUNTERSUNK HEAD, 82 ,CROSS-RECESSED, CORROSION RESISTING STEEL, UNF-2A

MS51960

PART NUMBER EXAMPLE: MS51960-1B

MS51960 -1 B

MILITARY STANDARD

DASH NUMBER

COATING " " = PASSIVATED
"B" = BLACK OXIDE

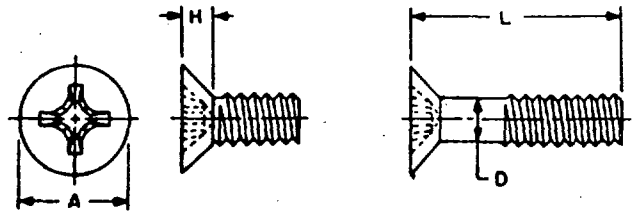

TABLE I. PART NUMBERS AND CHARACTERISTICS

PART NUMBER MS51960	L	NOMINAL SIZE	THREADS PER INCH	DIMENSIONS (MAX)			TENSILE STRENGTH MIN
				D	A	H	
-1	.12	.060	80UNF-2A	.0600	.119	.035	140
-2	.19						
-3	.25						
-4	.31						
-5	.38						
-6	.12	.086	64UNF-2A	.0860	.172	.051	310
-7	.19						
-8	.25						
-9	.31						
-10	.38						
-11	.44						
-12	.50						
-13	.62						
-14	.75						

SCREW, MACHINE-FLAT COUNTERSUNK HEAD, 82 ,CROSS-RECESSED, CORROSION RESISTING STEEL, UNF-2A

MS51960

TABLE I. PART NUMBERS AND CHARACTERISTICS (CONT.)

PART NUMBER MS51960	L	NOMINAL SIZE	THREADS PER INCH	DIMENSIONS (MAX)			TENSILE STRENGTH MIN
				D	A	H	
-15	.12	.112	48UNF-2A	.1120	.225	.067	530
-16	.19						
-17	.25						
-18	.31						
-19	.38						
-20	.44						
-21	.50						
-22	.62						
-23	.75						
-24	.88						
-25	1.00						
-26	.12	.138	40UNF-2A	.1380	.279	.083	810
-27	.19						
-28	.25						
-29	.31						
-30	.38						
-31	.44						
-32	.50						
-33	.62						
-34	.75						
-35	.88						
-36	1.00						
-37	1.25						
-38	1.50						
-39	1.75						
-40	2.00						
-41	.12	.164	36UNF-2A	.1640	.332	.100	1180
-42	.19						
-43	.25						
-44	.31						
-45	.38						
-46	.44						
-47	.50						
-48	.62						
-49	.75						
-50	.88						

SCREW, MACHINE-FLAT COUNTERSUNK HEAD, 82 , CROSS-RECESSED CORROSION RESISTING STEEL, UNF-2A

MS51960

TABLE I. PART NUMBERS AND CHARACTERISTICS (CONT.)

PART NUMBER MS51960	L	NOMINAL SIZE	THREADS PER INCH	DIMENSIONS (MAX)			TENSILE STRENGTH MIN
				D	A	H	
-51	1.00	.164	36UNF-2A	.1640	.332	.100	1180
-52	1.25						
-53	1.50						
-54	1.75						
-55	2.00						
-60	.19	.190	32UNF-2A	.1900	.385	.116	1600
-61	.25						
-62	.31						
-63	.38						
-64	.44						
-65	.50						
-66	.62						
-67	.75						
-68	.88						
-69	1.00						
-70	1.25						
-71	1.50						
-72	1.75						
-73	2.00						
-74	2.25						
-75	2.50						
-78	.25	.250	28UNF-2A	.2500	.507	.153	2910
-79	.31						
-80	.38						
-81	.44						
-82	.50						
-83	.62						
-84	.75						
-85	.88						
-86	1.00						
-87	1.25						
-88	1.50						
-89	1.75						
-90	2.00						
-91	2.25						
-92	2.50						

SCREW, MACHINE-FLAT COUNTERSUNK HEAD, 82 , CROSS-RECESSED CORROSION RESISTING STEEL, UNF-2A

MS51960

TABLE I. PART NUMBERS AND CHARACTERISTICS (CONT.)

PART NUMBER MS51960	L	NOMINAL SIZE	THREADS PER INCH	DIMENSIONS (MAX)			TENSILE STRENGTH MIN
				D	A	H	
-95	.38	.3125	24UNF-2A	.3125	.635	.191	4640
-96	.44						
-97	.50						
-98	.62						
-99	.75						
-100	.88						
-101	1.00						
-102	1.25						
-103	1.50						
-104	1.75						
-105	2.00						
-106	2.25						
-107	2.50						
-110	.50	.375	24UNF-2A	.3750	.762	.230	7020
-111	.62						
-112	.75						
-113	.88						
-114	1.00						
-115	1.25						
-116	1.50						
-117	1.75						
-118	2.00						
-119	2.25						
-120	2.50						
-121	2.75						
-122	3.00						

BOLT, INTERNAL WRENCHING, 160 KSI Ftu

MIL-B-7838

SCOPE: THIS SECTION COVERS INTERNAL WRENCHING BOLTS INTENDED FOR USE IN APPLICATIONS REQUIRING 160 KSI (THOUSANS POUNDS PER SQUARE INCH TENSILE STRENGTH, 96,000 PSI SHEAR STRENGTH, OR HIGH FATIGUE STRENGTH, OR COMBINATIONS THEREOF.

PART NUMBER EXAMPLE: MS20004-16

MS20004 - 16

MILITARY STANDARD

HEAD "-" = UNDRILLED
"H" = DRILLED

GRIP LENGTH DASH NO.
SEE MS200024 - MS20024 SHEET

MS20004 THRU MS20024

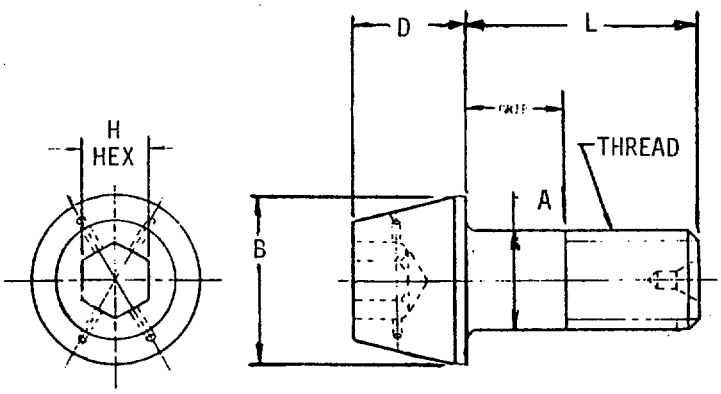

BOLT, INTERNAL WRENCHING, 160 KSI Ftu AND 96 KSI Fsu

MS20004 THRU MS20024

TABLE I. DIMENSIONS AND CHARACTERISTICS

PART NO. MS200	THREAD PER MIL-S-7742 UNF-3A	DIMENSIONS B DIA MAX	A DIA MAX	D DIA MAX	H HEX	ULTIMATE TENSILE STRENGTH LBS-MIN
04	1/4-28	.438	.2492	.250	.1900	6190
05	5/16-24	.531	.3117	.312	.2210	9820
06	3/8-24	.649	.3742	.375	.3150	15200
07	7/16-20	.750	.4367	.438	.3150	20600
08	1/2-20	.828	.4991	.500	.3785	27400
09	9/16-18	.938	.5616	.562	.4410	34800
10	5/80-18	1.050	.6240	.625	.5035	43600
12	3/4-16	1.230	.7488	.750	.5660	63200
14	7/8-14	1.438	.8737	.875	.6295	86100
16	1 -14NS-3A	1.625	.9985	1.000	.7547	112000
18	1-1/8-12	1.875	1.124	1.125	.7547	114000
20	1-1/4-12	2.125	1.249	1.250	1.005	144000
22	1-3/8-12	2.313	1.374	1.375	1.131	180000
24	1-1/2-12	2.500	1.499	1.500	1.256	263000

TABLE II. DASH NO., GRIP RANGE

PART NO. RANGE MS200	DASH NO. GRIP RANGE
04 - 08	16 - 96
09 - 17	16 - 112
18	18 - 128
20	20 - 128
22	22 - 128
24	24 - 128

SEE MS20004 - MS20024 SHEET FOR SPECIFIC LENGTH VS. GRIP SIZE AND PART NO.

BOLT, 180 KSI Ftu AND 108 KSI Fsu, 450 F, PROTRUDING AND FLUSH HEAD

MIL-B-8831

SCOPE: THIS SECTION COVERS BOLTS USED WHERE TEMPERATURES ARE NOT GREATER THAN 450°F AND ULTIMATE TENSILE STRENGTH IS 180 KSI Ftu (ULTIMATE TENSILE STRESS) AND 108 KSI Fsu. BOLTS IN THIS SECTION ARE INTENDED FOR USE IN APPLICATIONS WHICH REQUIRE A BOLT WITH 180,000 PSI TENSILE STRENGTH AND 108 KSI SHEAR STRENGTH.

PART NUMBER EXAMPLE: M8831/2-2X34

M8831/2 -2 X 34

MILITARY SPECIFICATION AND SHEET NO.

DIAMETER DASH NO. (IN SIXTEENTHS OF INCH)

OVERSIZE SHANK DIAMETER
X = 1ST OVERSIZE
Y = 2ND OVERSIZE
(STAMP ON SLEEVE)

GRIP LENGTH DASH NO. (IN SIXTEENTHS OF INCH, STAMP ON THREADED END)

PART NUMBER EXAMPLE FOR MS SHEET: MS14157-040008

MS14157 -04 0008

MILITARY STANDARD

BOLT DIAMETER DASH NO. (IN SIXTEENTHS OF INCH)

GRIP DASH NO. (IN SIXTEENTHS OF INCH)
SEE SPECIFIC MS SHEET FOR DETAILS

BOLT, 100 REDUCED FLUSH HEAD, STRAIGHT SHANK, EXPANDABLE ALUMINUM ALLOY SLEEVE, ALLOY STEEL PIN, 108 KSI Fsu

MIL-B-8831/2

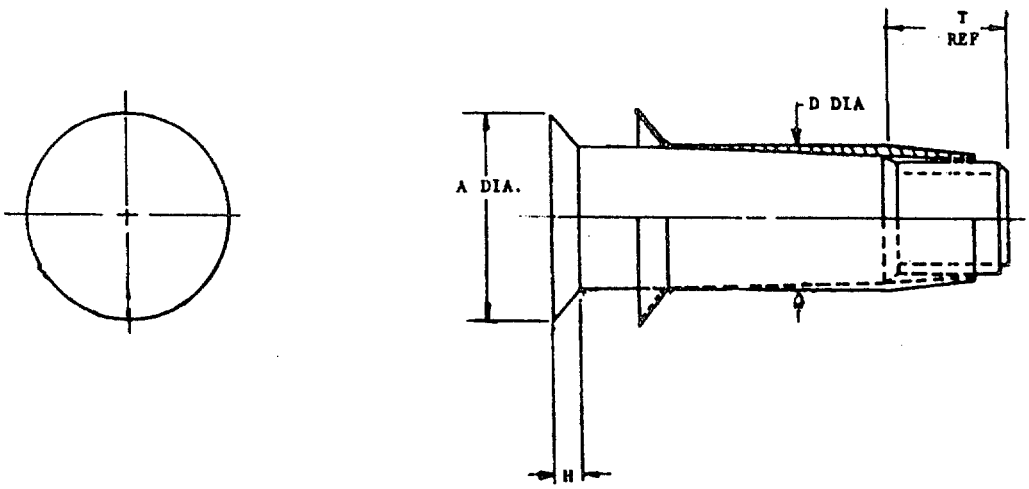

BOLT, 100 REDUCED FLUSH HEAD, STRAIGHT SHANK, EXPANDABLE ALUMINUM ALLOY SLEEVE, ALLOY STEEL PIN, 108 KSI Fsu

MIL-B-8831/2

TABLE I. DIMENSIONS

PART NO. M8331/2-	GROUP	GRIP DASH NO.	THREAD PER MIL-S-8879 UNJF-3A	DIMENSIONS A	D	H	T	ULTIMATE TENSILE STRENGTH LBS-MIN	DOUBLE SHEAR STRENGTH LBS-MIN
3	1	-6 THRU -8	.1900-32	.3327 .3259	.2365 .2360	.048 .046	.343	2290	6100
	2	-9 THRU -16		.3341 .3273	.2365 .2360				
	3	-17 THRU -24		.3445 .3377	.2485 .2480				
4	1	-6 THRU -8	.2500-28	.4295 .4224	.3005 .3000	.063 .061	.406	4250	10600
	2	-9 THRU -17		.4339 .4268	.3005 .3000				
	3	-18 THRU -28		.4469 .4398	.3145 .3140				
5	1	-6 THRU -8	.3125-24	.5080 .5013	.3665 .3660	.070 .068	.484	5950	16600
	2	-9 THRU -20		.5163 .5090	.3665 .3660				
	3	-21 THRU -31		.5306 .5233	.3805 .3800				
6	1	-6 THRU -8	.3750-24	.5977 .5876	.4315 .4310	.081 .078	.562	8420	23900
	2	-9 THRU -22		.6087 .5986	.4315 .4310				
	3	-23 THRU -34		.6243 .6142	.4475 .4470				
7	1	-6 THRU -8	.4375-20	.7072 .6968	.4985 .4980	.100 .097	.625	11600	32500
	2	-9 THRU -26		.7234 .7130	.4985 .4980				
	3	-27 THRU -40		.7416 .7312	.5185 .5180				
8	1	-6 THRU -8	.5000-20	.7937 .7831	.5695 .5690	.110 .107	.703	15200	42400
	2	-9 THRU -30		.8157 .8051	.5695 .5690				
	3	-31 THRU -46		.8366 .8260	.5895 .5890				

653.3

BOLT, PROTRUDING HEAD, EXTERNAL WRENCHING, STRAIGHT SHANK, EXPANDABLE ALUMINUM ALLOY SLEEVE, ALLOY STEEL PIN, 180 KSI Ftu

MIL-B-8831/3

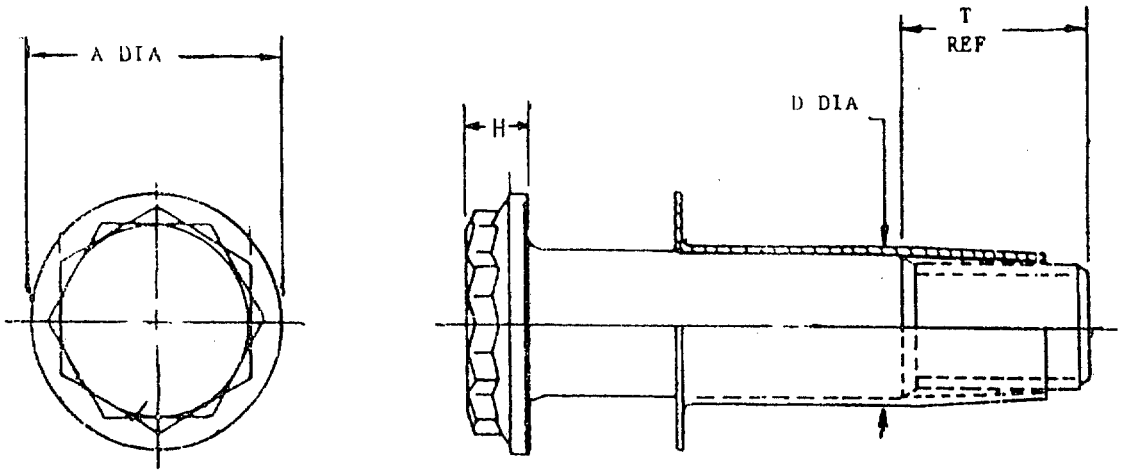

BOLT, PROTRUDING HEAD, EXTERNAL WRENCHING, STRAIGHT SHANK, EXPANDABLE ALUMINUM ALLOY SLEEVE, ALLOY STEEL PIN, 180 KSI Ftu

MIL-B-8831/3

TABLE I. DIMENSIONS

PART NO. M8831/3-	GROUP	GRIP DASH NO.	THREAD PER MIL-S-8879 UNJF-3A	DIMENSIONS A	D	H	T	ULTIMATE TENSILE STRENGTH LBS-MIN	DOUBLE SHEAR STRENGTH LBS-MIN
3	1	-6 THRU -8	.1900-32	.409 .399	.2365 .2360	.128 .118	.343	3910	6100
	2	-9 THRU -16			.2365 .2360				
	3	-17 THRU -24			.2485 .2480				
4	1	-6 THRU -8	.2500-28	.516 .506	.3005 .3000	.138 .126	.406	6980	10600
	2	-9 THRU -17			.3005 .3000				
	3	-18 THRU -28			.3145 .3140				
5	1	-6 THRU -8	.3125-24	.636 .624	.3665 .3660	.173 .161	.484	11100	16600
	2	-9 THRU -20			.3665 .3660				
	3	-21 THRU -31			.3805 .3800				
6	1	-6 THRU -8	.3750-24	.718 .704	.4315 .4310	.187 .175	.562	17100	23900
	2	-9 THRU -22			.4315 .4310				
	3	-23 THRU -34			.4475 .4470				
7	1	-6 THRU -8	.4375-20	.808 .792	.4985 .4980	.218 .206	.625	23200	32500
	2	-9 THRU -26			.4985 .4980				
	3	-27 THRU -40			.5185 .5180				
8	1	-6 THRU -8	.5000-20	.893 .877	.5695 .5690	.252 .240	.703	30900	42400
	2	-9 THRU -30			.5695 .5690				
	3	-31 THRU -46			.5895 .5890				

271

BOLT, PROTRUDING HEAD, EXTERNAL WRENCHING, STRAIGHT SHANK, EXPANDABLE ALUMINUM ALLOY SLEEVE, ALLOY STEEL PIN, 180 KSI Ftu

MIL-B-8831/3

TABLE I. DIMENSIONS (CONT.)

PART NO. M8331/3-	GROUP	GRIP DASH NO.	THREAD PER MIL-S-8879 UNJF-3A	DIMENSIONS A	D	H	T	ULTIMATE TENSILE STRENGTH LBS-MIN	DOUBLE SHEAR STRENGTH LBS-MIN
9	1	-10 THRU -23	.5625-18	1.096 1.079	.6395 .6390	.280 .268	.781	39200	53700
	2	-24 THRU -48			.6705 .6700				
	3	-49 THRU -72			.7015 .7010				
10	1	-10 THRU -25	.6250-18	1.191 1.175	.7075 .7070	.324 .312	.843	49000	66300
	2	-26 THRU -52			.7465 .7460				
	3	-53 THRU -78			.7795 .7790				
12	1	-10 THRU -29	.7500-16	1.386 1.370	.8425 .8420	.392 .378	1.000	71000	95400
	2	-30 THRU -60			.8845 .8840				
	3	-61 THRU -90			.9205 .9200				
14	1	-15 THRU -26	.8750-14	1.589 1.573	.9825 .9820	.470 .454	1.156	97100	129900
	2	-27 THRU -67			.9825 .9820				
	3	-68 THRU -108			1.0455 1.0450				
16	1	-15 THRU -26	1.0000-12	1.788 1.722	1.1235 1.1230	.538 .522	1.312	126000	169600
	2	-27 THRU -70			1.1235 1.1230				
	3	-71 THRU -112			1.1865 1.1860				

BOLT, 100 REDUCED FLUSH HEAD, LOW INTERFERENCE, STRAIGHT SHANK, EXPANDABLE ALUMINUM ALLOY SLEEVE, ALLOY STEEL PIN, 108 KSI Fsu

MIL-B-8831/4

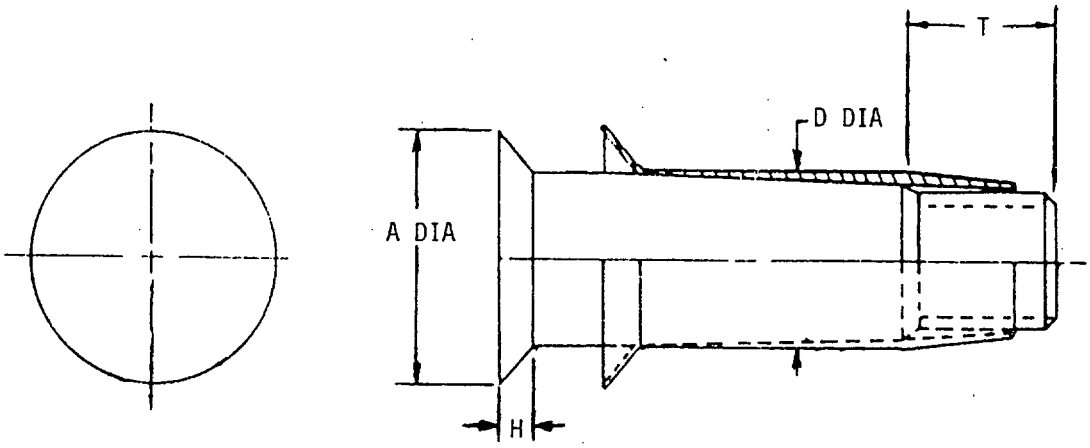

BOLT, 100° REDUCED FLUSH HEAD, LOW INTERFERENCE, STRAIGHT SHANK, EXPANDABLE ALUMINUM ALLOY SLEEVE, ALLOY STEEL PIN, 108 KSI Fsu

MIL-B-8831/4

TABLE I. DIMENSIONS

PART NO. M8331/4-	GROUP	GRIP DASH NO.	THREAD PER MIL-S-8879 UNJF-3A	DIMENSIONS A	D	H	T	ULTIMATE TENSILE STRENGTH LBS-MIN	DOUBLE SHEAR STRENGTH LBS-MIN
3	1	-6 THRU -8	.1900-32	.3327	.2365	.053	.343	2290	6100
				.3259	.2360	.051			
	2	-9 THRU -16		.3341	.2365				
				.3273	.2360				
	3	-17 THRU -24		.3445	.2485				
				.3377	.2480				
4	1	-6 THRU -8	.2500-28	.4295	.3005	.068	.406	4250	10600
				.4224	.3000	.066			
	2	-9 THRU -17		.4339	.3005				
				.4268	.3000				
	3	-18 THRU -28		.4469	.3145				
				.4398	.3140				
5	1	-6 THRU -8	.3125-24	.5080	.3665	.074	.484	5950	16600
				.5013	.3660	.072			
	2	-9 THRU -20		.5163	.3665				
				.5090	.3660				
	3	-21 THRU -31		.5306	.3805				
				.5233	.3800				
6	1	-6 THRU -8	.3750-24	.5977	.4315	.084	.562	8420	23900
				.5876	.4310	.081			
	2	-9 THRU -22		.6087	.4315				
				.5986	.4310				
	3	-23 THRU -34		.6243	.4475				
				.6142	.4470				
7	1	-6 THRU -8	.4375-20	.7072	.4985	.103	.625	11600	32500
				.6968	.4980	.100			
	2	-9 THRU -26		.7234	.4985				
				.7130	.4980				
	3	-27 THRU -40		.7416	.5185				
				.7312	.5180				
8	1	-6 THRU -8	.5000-20	.7937	.5695	.112	.703	15200	42400
				.7831	.5690	.109			
	2	-9 THRU -30		.8157	.5695				
				.8051	.5690				
	3	-31 THRU -46		.8366	.5895				
				.8260	.5890				

BOLT, PROTRUDING HEAD, EXTERNAL WRENCHING, STRAIGHT SHANK, LOW INTERFERENCE EXPANDABLE ALUMINUM ALLOY SLEEVE, ALLOY STEEL PIN, 180 KSI Ftu

MIL-B-8831/5

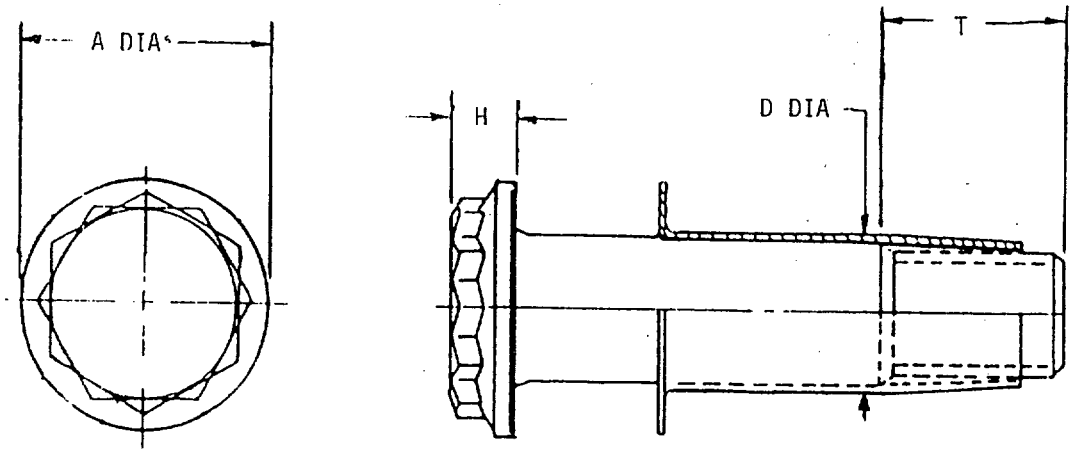

BOLT, PROTRUDING HEAD, EXTERNAL WRENCHING, STRAIGHT SHANK, LOW INTERFERENCE
EXPANDABLE ALUMINUM ALLOY SLEEVE, ALLOY STEEL PIN, 180 KSI F:u

MIL-B-8831/5

TABLE I. DIMENSIONS

PART NO. M8331/5-	GROUP	GRIP DASH NO.	THREAD PER MIL-S-8879 UNJF-3A	Dimensions A	Dimensions D	Dimensions H	Dimensions T	ULTIMATE TENSILE STRENGTH LBS-MIN	DOUBLE SHEAR STRENGTH LBS-MIN
3	1	-5 THRU -8	.1900-32	.409 .399	.2365 .2360	.128 .118	.343	3910	6100
	2	-9 THRU -16			.2365 .2360				
	3	-17 THRU -22			.2485 .2480				
4	1	-5 THRU -8	.2500-28	.516 .506	.3005 .3000	.138 .126	.406	6980	10600
	2	-9 THRU -17			.3005 .3000				
	3	-18 THRU -28			.3145 .3140				
5	1	-6 THRU -8	.3125-24	.636 .624	.3665 .3660	.173 .161	.484	11100	16600
	2	-9 THRU -20			.3665 .3660				
	3	-21 THRU -31			.3805 .3800				
6	1	-6 THRU -8	.3750-24	.718 .704	.4315 .4310	.187 .175	.562	17100	23900
	2	-9 THRU -22			.4315 .4310				
	3	-23 THRU -34			.4475 .4470				
7	1	-6 THRU -8	.4375-20	.808 .792	.4985 .4980	.218 .206	.625	23200	32500
	2	-9 THRU -26			.4985 .4980				
	3	-27 THRU -40			.5185 .5180				
8	1	-6 THRU -8	.5000-20	.893 .877	.5695 .5690	.252 .240	.703	30900	42400
	2	-9 THRU -30			.5695 .5690				
	3	-31 THRU -46			.5895 .5890				

BOLT, PROTRUDING HEAD, EXTERNAL WRENCHING, STRAIGHT SHANK, LOW INTERFERENCE EXPANDABLE ALUMINUM ALLOY SLEEVE, ALLOY STEEL PIN, 180 KSI Ftu

MIL-B-8831/5

TABLE I. DIMENSIONS (CONT.)

PART NO. M8331/5-	GROUP	GRIP DASH NO.	THREAD PER MIL-S-8879 UNJF-3A	DIMENSIONS A	D	H	T	ULTIMATE TENSILE STRENGTH LBS-MIN	DOUBLE SHEAR STRENGTH LBS-MIN
9	1	-10 THRU -23	.5625-18	1.096 1.079	.6395 .6390	.280 .268	.781	39200	53700
	2	-24 THRU -48			.6705 .6700				
	3	-49 THRU -72			.7015 .7010				
10	1	-10 THRU -25	.6250-18	1.191 1.175	.7075 .7070	.324 .312	.843	49000	66300
	2	-26 THRU -52			.7465 .7460				
	3	-53 THRU -78			.7795 .7790				
12	1	-10 THRU -29	.7500-16	1.386 1.370	.8425 .8420	.392 .378	1.000	71000	95400
	2	-30 THRU -60			.8845 .8840				
	3	-61 THRU -90			.9205 .9200				
14	1	-15 THRU -26	.8750-14	1.589 1.573	.9825 .9820	.470 .454	1.156	97100	129900
	2	-27 THRU -67			.9825 .9820				
	3	-68 THRU -108			1.0455 1.0450				
16	1	-15 THRU -26	1.0000-12	1.788 1.722	1.1235 1.1230	.538 .522	1.312	126000	169600
	2	-27 THRU -70			1.1235 1.1230				
	3	-71 THRU -112			1.1865 1.1860				

BOLT, WHEEL, TENSION, FLANGED STEEL, 450 F, EXTERNAL SPLINE DRIVE, 180 KSI Ftu

MS14157

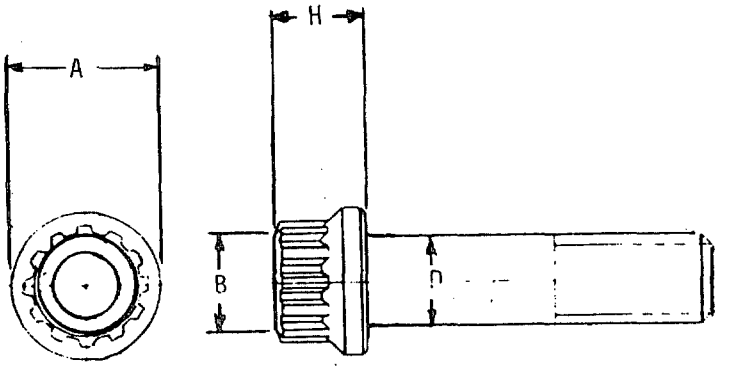

TABLE I. DIMENSIONS

PART NO. MS14157-	NOMINAL SIZE	THREAD PER MIL-S-8879 UNJF-3A	DIMENSIONS A DIA MAX	B DIA MAX	D DIA MAX	H	ULTIMATE TENSILE STRENGTH LBS-MIN	DOUBLE SHEAR STRENGTH LBS-MIN
04	1/4	.2500-28	.438	.250	.2495	.250	7270	10600
06	3/8	.3750-24	.649	.438	.3745	.337	17100	23900
07	7/16	.4375-20	.750	.500	.4370	.393	23200	32500
08	1/2	.5000-20	.828	.562	.4995	.450	30900	42400
09	9/16	.5625-18	.938	.625	.5615	.505	39200	53700
10	5/8	.6250-18	1.050	.688	.6240	.562	49100	66300

BOLT, TENSION, FLANGED STEEL, 450 F, EXTERNAL WRENCHING, SPLINE DRIVE, 180 KSI Ftu

MS21134

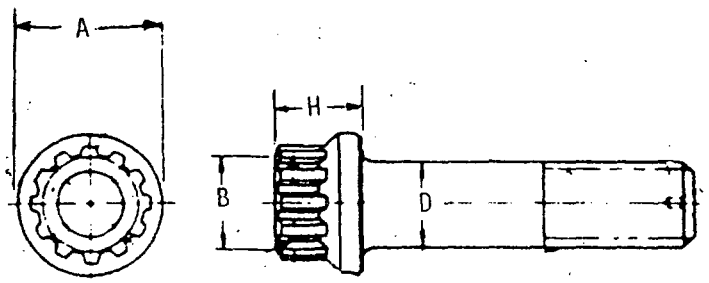

TABLE I. DIMENSIONS

PART NO. MS21134-	NOMINAL SIZE	THREAD PER MIL-S-8879 UNJF-3A	DIMENSIONS A DIA MAX	B DIA MAX	D DIA MAX	H	ULTIMATE TENSILE STRENGTH LBS-MIN	DOUBLE SHEAR STRENGTH LBS-MIN
03	NO. 10	.1900-32	.350	.188	.1895	.205	3910	6100
04	1/4	.2500-28	.470	.250	.2495	.250	6980	10600
05	5/16	.3125-24	.585	.375	.3130	.312	11100	16600
06	3/8	.3750-24	.701	.438	.3745	.337	17100	23900
07	7/16	.4375-20	.817	.500	.4370	.393	23200	32500
08	1/2	.5000-20	.932	.562	.4995	.450	30900	42400
09	9/16	.5625-18	1.047	.625	.5615	.505	39200	53700
10	5/8	.6250-18	1.163	.688	.6240	.562	49100	66300
12	3/4	.7500-16	1.394	.812	.7490	.600	71000	96400
14	7/8	.8750-14	1.625	.938	.8740	.700	97000	129900
16	1	1.0000-12	1.856	1.062	.9990	.800	126000	169800
13	1-1/8	1.1250-12	2.067	1.250	1.1240	.900	???	214700
20	1-1/4	1.2500-12	2.318	1.375	1.2490	1.000	202000	265100

BOLT, TENSION, STEEL, 450°F, EXTERNAL WRENCHING FLANGED, 12 POINT, 180 KSI Ftu

MS21250

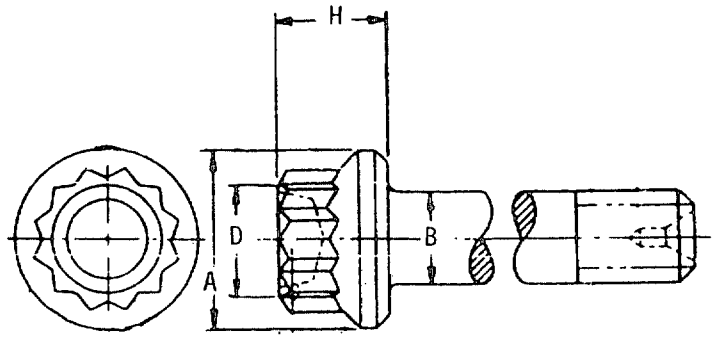

TABLE I. DIMENSIONS

PART NO. MS21250-	THREAD PER MIL-S-8879 UNJF-3A	DIMENSIONS A DIA MAX	B DIA MAX	D DIA MAX	H	ULTIMATE TENSILE STRENGTH LBS-MIN	DOUBLE SHEAR STRENGTH LBS-MIN
04	.2500-28	.438 .428	.2495 .2485	.312 .297	.300	6980	10600
05	.3125-24	.531 .521	.3120 .3110	.375 .360	.348	11100	16600
06	.3750-24	.649 .639	.3745 .3735	.437 .422	.388	17100	23900
07	.4375-20	.750 .740	.4370 .4360	.500 .485	.435	23200	32500
08	.5000-20	.828 .818	.4995 .4985	.562 .547	.504	30900	42400
09	.5625-18	.938 .928	.5615 .5605	.625 .610	.557	39200	53700
10	.6250-18	1.050 1.040	.6240 .6230	.687 .672	.618	49000	66300
12	.7500-16	1.230 1.220	.7490 .7480	.812 .797	.711	71000	95400
14	.8750-14	1.438 1.428	.8740 .8730	.937 .922	.808	97100	129900
16	1.0000-12	1.625 1.615	.9990 .9980	1.062 1.047	.923	126000	169600
18	1.1250-12	1.875 1.865	1.1240 1.1225	1.250 1.235	1.051	162000	214700
20	1.2500-12	2.125 2.115	1.2490 1.2475	1.312 1.297	1.155	202000	265100
22	1.3750-12	2.313 2.303	1.3740 1.3725	1.437 1.422	1.266	247000	320700
24	1.5000-12	2.500 2.490	1.4990 1.4975	1.625 1.610	1.434	296000	381700

BOLTS

MIL-F-18240

SCOPE: THIS SECTION COVERS BOLTS COVERED BY MIL-F-18240. THESE MS SHEETS ARE MS21091, MS21092, MS21094, MS21095, MS21096, MS21097, MS21098 AND MS21099. SEE PAGES 353.1 THRU .3. THESE BOLTS ARE INTENDED FOR USAGE THROUGHOUT THE DEPARTMENT OF THE NAVY.

PART NUMBER EXAMPLE: SEE PAGE 353.1

BOLT, SELF-LOCKING, 250°F., STEEL, 75 KSI Fsu, 100 FLUSH HEAD, CROSS RECESSED

MS21091

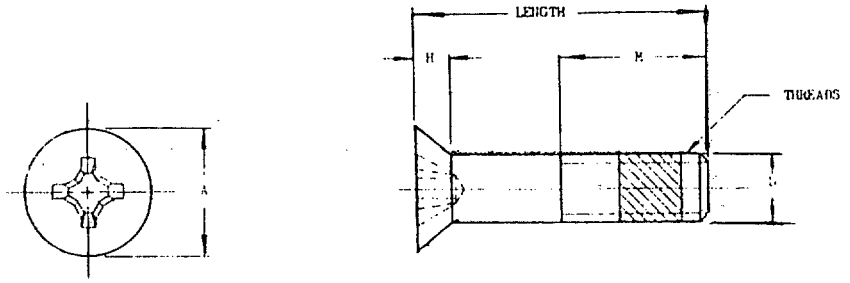

TABLE I. DIMENSIONS

PART NO. * MS21091- L	THREAD	DIMENSIONS D DIA MAX	A DIA MAX SHARP	H	M REF	TENSILE STRENGTH LBS-MIN	DOUBLE SHEAR STRENGTH LBS-MIN
04	4-40UNC-3A	.1120	.225	.044	.250	760	1480
06	6-32UNC-3A	.1380	.279	.055	.312	1120	2240
08	8-32UNC-3A	.1640	.332	.068	.437	1740	3170
3	10-32UNF-3A	.1890	.385	.080	.469	2420	4250
4	1/4-28UNF-3A	.2490	.507	.106	.506	4420	7360
5	5/16-24UNF-3A	.3115	.635	.133	.531	7100	11500
6	3/8-24UNF-3A	.3740	.762	.159	.641	10790	16560
7	7/16-20UNF-3A	.4365	.890	.186	.656	14600	22500
8	1/2-20UNF-3A	.4990	1.017	.213	.781	19810	29400
9	9/16-18UNF-3A	.5615	1.145	.240	.906	25060	37400

* SEE TABLE A, MIL-F-18240
LENGTH - SEE MS21091

BOLT, SELF-LOCKING, 250°F., CRES, 48 KSI Fsu, 80 KSI Ftu, 100 FLUSH HEAD, CROSS RECESSED

MS21092

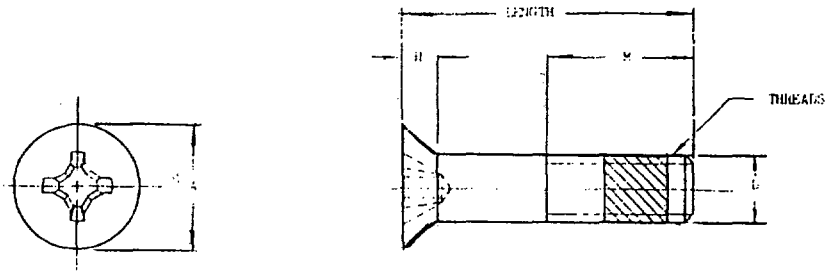

TABLE I. DIMENSIONS

PART NO. * MS21092- L	THREAD	DIMENSIONS D DIA MAX	A DIA MAX SHARP	H	M	TENSILE STRENGTH LBS-MIN	DOUBLE SHEAR STRENGTH LBS-MIN
04	.1120-40UNC-3A	.1120	.225	.044	.250	480	930
06	.1380-32UNC-3A	.1380	.279	.055	.312	720	1420
08	.1640-32UNC-3A	.1640	.332	.068	.437	1120	2030
3	.1900-32UNF-3A	.1890	.385	.080	.469	1600	2720
4	.2500-28UNF-3A	.2490	.507	.106	.506	2910	4700
5	.3125-24UNF-3A	.3115	.635	.133	.531	4640	7370
6	.3750-24UNF-3A	.3740	.762	.159	.641	7020	10600
7	.4375-20UNF-3A	.4365	.890	.186	.656	9490	14400
8	.5000-20UNF-3A	.4990	1.017	.213	.781	12790	18800

* SEE TABLE A, MIL-F-18240
LENGTH - SEE MS21092

BOLT, SELF-LOCKING, 250° F., STEEL, 75 KSI Fsu, 125 KSI Ftu, HEX HEAD

MS21094

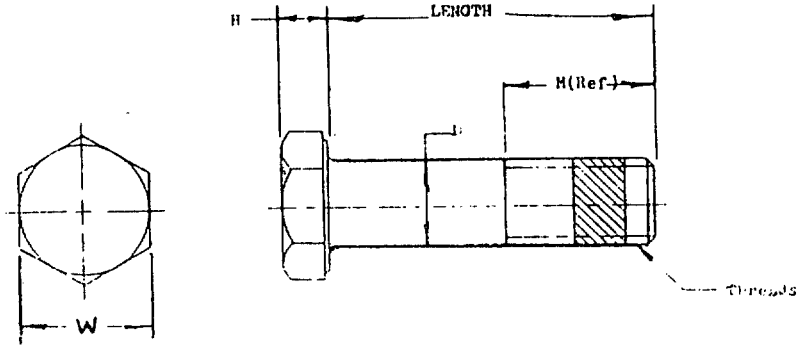

TABLE I. DIMENSIONS AND CHARACTERISTICS

PART NO. * MS21094- L	THREAD MIL-S-7742 UNF-3A	DIMENSIONS D DIA MAX	H MAX	M REF	W MAX	DBL. SHEAR STRENGTH LBS-MIN	ULT. TENSILE STRENGTH LBS-MIN
4	1/4-28	.249	.172	.506	.440	7360	4420
5	5/16-24	.312	.204	.531	.502	11500	7100
6	3/8-24	.374	.235	.641	.565	16560	10790
7	7/16-20	.437	.266	.656	.627	22500	14600
8	1/2-20	.499	.297	.781	.752	29400	19810

* SEE TABLE A, MIL-F-18240
LENGTH - SEE MS21094

BOLT, SELF-LOCKING, 250° F., CRES, 48 KSI Fsu, 80 KSI Ftu, HEX HEAD

MS21095

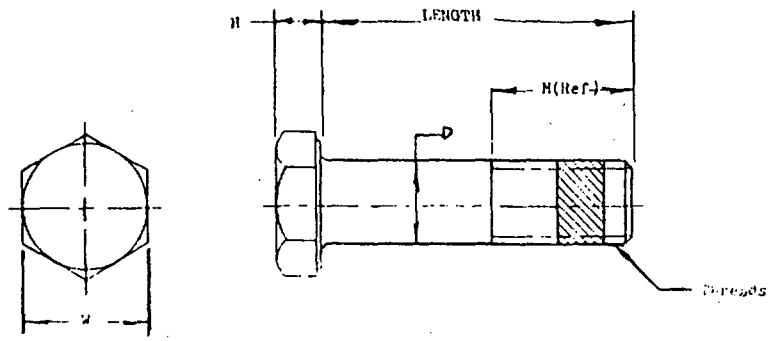

TABLE I. DIMENSIONS AND CHARACTERISTICS

PART NO. * MS21095- L	THREAD MIL-S-7742 UNF-3A	DIMENSIONS D DIA MAX	H MAX	M REF	W MAX	DBL. SHEAR STRENGTH LBS-MIN	ULT. TENSILE STRENGTH LBS-MIN
1	#6-32	.138	.106	.312	.251	1420	720
2	#8-32	.164	.118	.437	.313	2030	1120
3	#10-32	.189	.141	.469	.377	2720	1600
4	1/4-28	.249	.172	.506	.440	4700	2910
5	5/16-24	.312	.204	.531	.502	7370	4640
6	3/8-24	.374	.235	.641	.565	10600	7020
7	7/16-20	.437	.266	.656	.627	14400	9490
8	1/2-20	.499	.297	.781	.752	18800	12790

* SEE TABLE A, MIL-F-18240
LENGTH - SEE MS21095

285

BOLT, SELF-LOCKING, 250° F., STEEL, 75 KSI Fsu, 125 KSI Ftu, PAN HEAD, CROSS RECESSED

MS21096

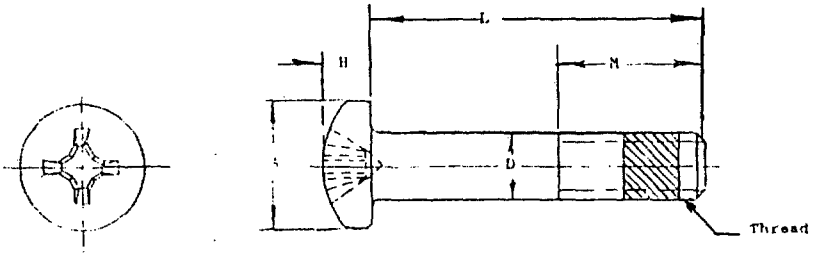

TABLE I. DIMENSIONS AND CHARACTERISTICS

PART NO. * MS21096- L	THREAD	DIMENSIONS D DIA MAX MIN	A DIA MAX MIN	H MAX MIN	M REF MIN	DBL. SHEAR STRENGTH LBS-MIN	ULT. TENSILE STRENGTH LBS-MIN
04	4-40UNC-3A	.1120	.219	.080		1480	760
		.1095	.205	.070	.250		
06	6-32UNC-3A	.1380	.270	.097		2240	1120
		.1355	.256	.087	.312		
08	8-32UNC-3A	.1635	.322	.115		3170	1740
		.1610	.306	.105	.437		
3	10-32UNF-3A	.1895	.373	.133		4250	2420
		.1870	.357	.122	.469		
4	1/4-28UNF-3A	.2495	.492	.175		7360	4420
		.2470	.473	.162	.506		
5	5/16-24UNF-3A	.3120	.615	.218		11500	7100
		.3095	.594	.203	.531		
6	3/8-24UNF-3A	.3745	.740	.261		16560	10790
		.3720	.716	.244	.641		
7	7/16-20UNF-3A	.4370	.863	.304		22500	14600
		.4345	.838	.286	.656		
8	1/2-20UNF-3A	.4995	.987	.348		29400	19810
		.4970	.958	.327	.781		

* SEE TABLE A, MIL-F-18240
LENGTH - SEE MS21096

BOLT, SELF-LOCKING, 250° F., CRES, 48 KSI Fsu, 80 KSI Ftu, PAN HEAD, CROSS RECESSED

MS21097

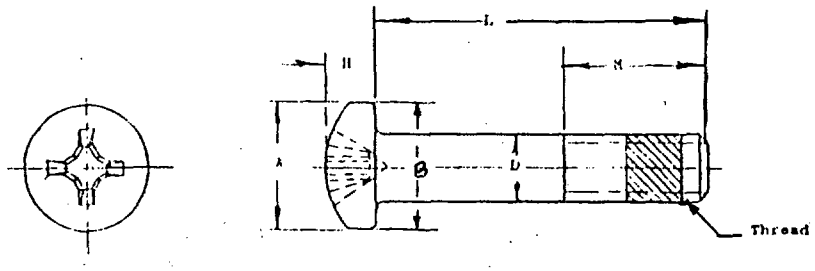

TABLE I. DIMENSIONS AND CHARACTERISTICS

PART NO. * MS21097- L	THREAD	DIMENSIONS D DIA MAX MIN	A DIA MAX MIN	B DIA MIN	H MAX MIN	M MIN	DBL. SHEAR STRENGTH LBS-MIN	ULT. TENSILE STRENGTH LBS-MIN
04	.1120-40UNC-3A	.1120	.219		.080		930	480
		.1095	.205	.195	.070	.250		
06	.1380-32UNC-3A	.1380	.270		.097		1420	720
		.1355	.256	.242	.087	.312		
08	.1640-32UNC-3A	.1635	.322		.115		2030	1120
		.1610	.306	.289	.105	.437		
3	.1900-32UNF-3A	.1895	.373		.133		2720	1600
		.1870	.357	.331	.122	.469		
4	.2500-28UNF-3A	.2495	.492		.175		4700	2910
		.2470	.473	.424	.162	.506		
5	.3125-24UNF-3A	.3120	.615		.218		7370	4640
		.3095	.594	.518	.203	.531		
6	.3750-24UNF-3A	.3745	.740		.261		10600	7020
		.3720	.716	.611	.244	.641		
7	.4375-20UNF-3A	.4370	.863		.304		14400	9490
		.4345	.838	.706	.286	.656		
8	.5000-20UNF-3A	.4995	.987		.348		18800	12790
		.4970	.958	.801	.327	.781		

* SEE TABLE A, MIL-F-18240
LENGTH - SEE MS21097

BOLT, SELF-LOCKING, STEEL, 160 KSI FTU, 250° F, 12 POINT, EXTERNAL WRENCHING
(EXTERNALLY WRENCHING CAP SCREWS)

MS21098

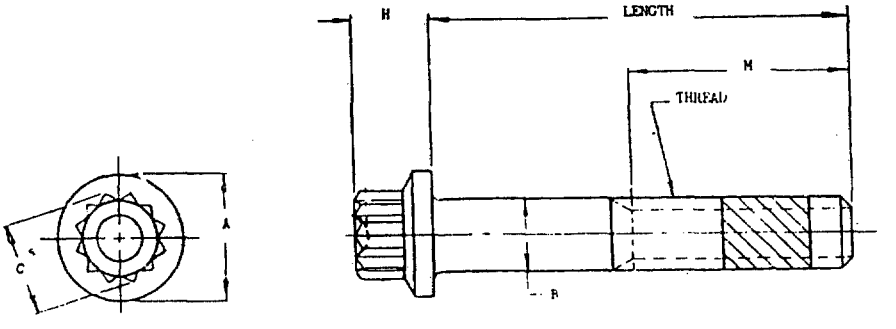

TABLE I. DIMENSIONS AND CHARACTERISTICS

PART NO. * MS21098- L	THREAD	DIMENSIONS A DIA	B DIA	C MIN	H	M MIN	ULT. TENSILE STRENGTH LBS-MIN
40	1/4-28UNF-3A	.375 .365	.2500 .2435	.277	.250 .244	1.000	5800
50	5/16-24UNF-3A	.468 .457	.3125 .3053	.347	.312 .306	1.125	9300
60	3/8-24UNF-3A	.562 .550	.3750 .3678	.419	.375 .368	1.250	14050
70	7/16-20UNF-3A	.656 .642	.4375 .4294	.491	.437 .430	1.375	19000
80	1/2-20UNF-3A	.750 .735	.5000 .4919	.561	.500 .492	1.500	25000

* SEE TABLE A, MIL-F-18240
LENGTH - SEE MS21098

BOLT, SELF-LOCKING, CORROSION RESISTING STEEL, 80 KSI FTU, 250° F., 12-POINT, EXTERNAL WRENCHING (EXTERNALLY WRENCHING CAP SCREWS)

MS21099

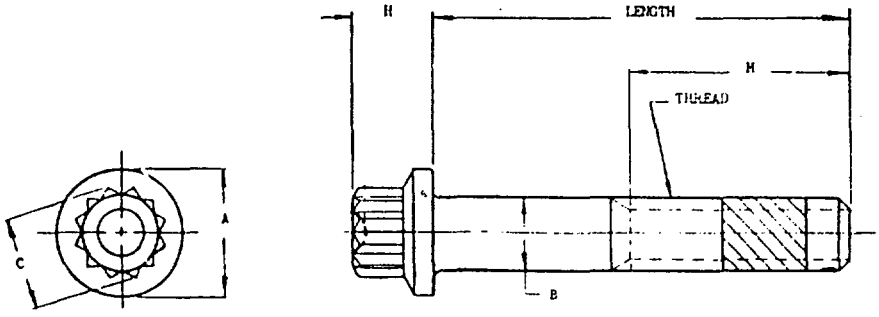

TABLE I. DIMENSIONS AND CHARACTERISTICS

PART NO. * MS21099- L	THREAD	DIMENSIONS A DIA	B DIA	C MIN	H	M MIN	ULT. TENSILE STRENGTH LBS-MIN
40	1/4-28UNF-3A	.375 .365	.2500 .2435	.277	.250 .244	1.000	2950
50	5/16-24UNF-3A	.468 .457	.3125 .3053	.347	.312 .306	1.125	4650
60	3/8-24UNF-3A	.562 .550	.3750 .3678	.419	.375 .368	1.250	7050
70	7/16-20UNF-3A	.656 .642	.4375 .4294	.491	.437 .430	1.375	9490
80	1/2-20UNF-3A	.750 .735	.5000 .4919	.561	.500 .492	1.500	12790

* SEE TABLE A, MIL-F-18240
LENGTH - SEE MS21099

SPLICES, CONDUCTOR

MIL-T-55156

SCOPE: THIS SECTION COVERS GENERAL REQUIREMENTS FOR CONDUCTOR SPLICES.

TYPE DESIGNATION: LP03 S 001

STYLE — LP03

ITEM NAME(CONDUCTOR SPLICES) — S

IDENTIFICATION NUMBER — 001

SPLICES, CONDUCTOR, STYLE LP03

MIL-T-55156/3

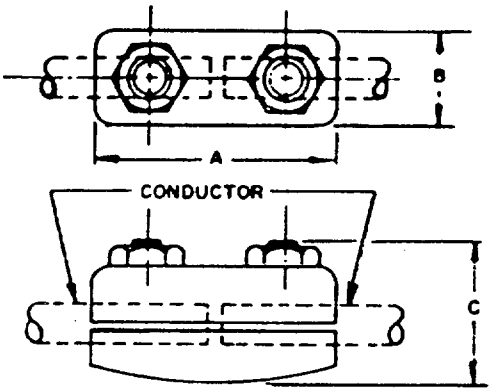

TABLE I. TYPE DESIGNATOR AND CHARACTERISTICS.

TYPE DESIGNATOR LP03S	TERMINAL SIZES	DIMENSIONS			RATED CURRENT
		A(MAX)	B(MAX)	C(MAX)	
011	0	2-1/4	1-5/16	1-5/16	345
012	00	2-1/2	1-7/16	1-7/16	400
013	000	2-1/2	1-7/16	1-7/16	465
014	0000	2-3/4	1-13/16	1-13/16	540
015	350 MCM	2-3/4	1-13/16	1-13/16	670
016	400 MCM	3-1/8	2-1/16	2-1/16	740
017	500 MCM	3-1/8	2-1/16	2-1/16	860
018	650 MCM	3-3/4	2-9/16	2-9/16	1000
019	800 MCM	3-3/4	2-9/16	2-9/16	1190
020	1000 MCM	4-1/4	2-11/16	2-11/16	1375
021	1600 MCM	5-2/3	3-7/8	3-7/8	1800
022	2000 MCM	5-2/3	3-7/8	3-7/8	2000

SPLICES, CONDUCTOR, STYLE LP04

MIL-T-55156/4

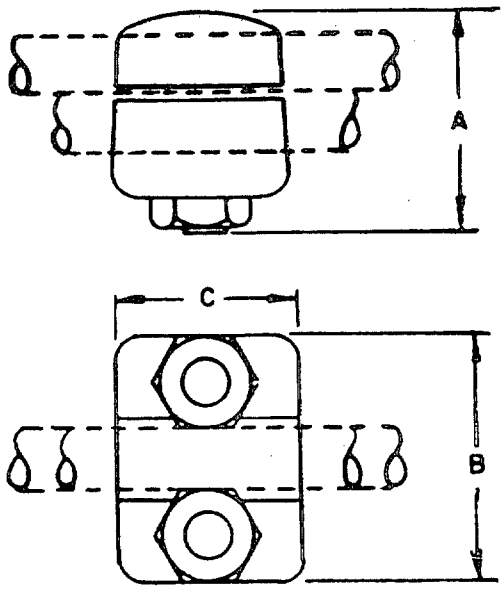

TABLE I. TYPE DESIGNATOR AND CHARACTERISTICS.

TYPE DESIGNATOR LP04S	TERMINAL SIZES	DIMENSIONS			RATED CURRENT
		A(MAX)	B(MAX)	C(MAX)	
002	12-10	1-1/16	3/4	5/8	60
004	8	1-1/16	3/4	3/4	107
005	6	1-5/16	7/8	3/4	129
007	4	1-3/4	1	7/8	172
009	2	1-7/8	1-1/8	15/16	230
010	1	1-7/8	1-1/8	15/16	270
011	0	2-7/16	1-5/8	1-3/8	314
012	00	2-7/16	1-3/4	1-1/2	365
013	000	2-7/16	1-3/4	1-1/2	423
014	0000	2-5/8	2-3/16	1-5/8	495
015	350 MCM	2-5/8	2-5/16	1-5/8	670
016	400 MCM	3-3/8	2-1/2	1-7/8	672

SPLICES, CONDUCTOR, STYLE LP05

MIL-T-55156/5

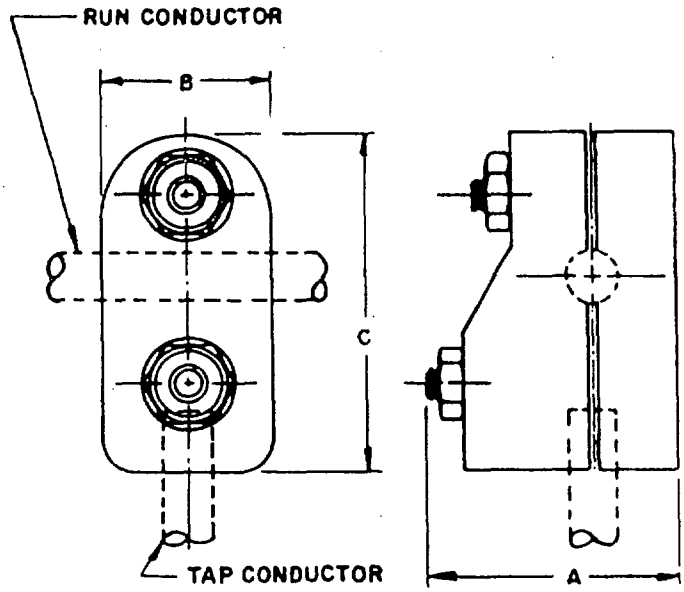

TABLE I. TYPE DESIGNATOR AND CHARACTERISTICS.

TYPE DESIGNATOR LP05S	TERMINAL SIZES (RUN)	DIMENSIONS			RATED CURRENT
		A(MAX)	B(MAX)	C(MAX)	
010	1	1-11/16	1-3/4	3-1/8	253
011	1	1-11/16	1-3/4	3-1/8	300
018	00	1-11/16	1-3/4	3-1/8	400
019	000	1-11/16	1-3/4	3-1/8	253
026	0000	1-15/16	2	3-1/2	345
027	0000	1-15/16	2	3-1/2	400
028	0000	1-15/16	2	3-1/2	465
029	0000	1-15/16	2	3-1/2	540
030	300 MCM	1-15/16	2	3-1/2	253
031	300 MCM	1-15/16	2	3-1/2	300
032	300 MCM	1-15/16	2	3-1/2	345
033	300 MCM	1-15/16	2	3-1/2	400
034	300 MCM	1-15/16	2	3-1/2	465
035	300 MCM	1-15/16	2	3-1/2	540
036	300 MCM	1-15/16	2	3-1/2	595
037	400 MCM	2-3/8	2-5/16	4	253
038	400 MCM	2-3/8	2-5/16	4	300
039	400 MCM	2-3/8	2-5/16	4	345
040	400 MCM	2-3/8	2-5/16	4	400
041	400 MCM	2-3/8	2-5/16	4	465
042	400 MCM	2-3/8	2-5/16	4	540
043	400 MCM	2-3/8	2-5/16	4	595

SPLICES, CONDUCTOR, STYLE LP05

MIL-T-55156/5

TABLE I. TYPE DESIGNATOR AND CHARACTERISTICS. (CONT.)

TYPE DESIGNATOR LP05S	TERMINAL SIZES (RUN)	DIMENSIONS			RATED CURRENT
		A(MAX)	B(MAX)	C(MAX)	
055	500 MCM	2-3/8	2-5/16	4	740
068	700 MCM	2-5/8	3	5	253
069	700 MCM	2-5/8	3	5	300
070	700 MCM	2-5/8	3	5	345
072	700 MCM	2-5/8	3	5	465
073	700 MCM	2-5/8	3	5	540
074	700 MCM	2-5/8	3	5	595
075	700 MCM	2-5/8	3	5	595
076	700 MCM	2-5/8	3	5	740
077	700 MCM	2-5/8	3	5	740
078	700 MCM	2-5/8	3	5	860
079	700 MCM	2-5/8	3	5	1000
140	1250 MCM	3-1/4	3-7/8	6-3/16	465
141	1250 MCM	3-1/4	3-7/8	6-3/16	540
142	1250 MCM	3-1/4	3-7/8	6-3/16	595
143	1250 MCM	3-1/4	3-7/8	6-3/16	595
144	1250 MCM	3-1/4	3-7/8	6-3/16	740
145	1250 MCM	3-1/4	3-7/8	6-3/16	740
146	1250 MCM	3-1/4	3-7/8	6-3/16	860
147	1250 MCM	3-1/4	3-7/8	6-3/16	1000
148	1250 MCM	3-1/4	3-7/8	6-3/16	1000
149	1250 MCM	3-1/4	3-7/8	6-3/16	1000
150	1250 MCM	3-1/4	3-7/8	6-3/16	1190
151	1250 MCM	3-1/4	3-7/8	6-3/16	1190
152	1250 MCM	3-1/4	3-7/8	6-3/16	1375

SPLICES, CONDUCTOR, CABLE CONNECTOR, BUTT CRIMP, TYPE CCBC

MIL-T-16366

SCOPE: THIS SECTION COVERS ELECTRICAL CRIMP-STYLE CONDUCTOR SPLICES USED FOR ELECTRICAL CABLE CONNECTIONS.

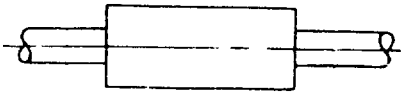

TYPE CCBC TABLE I.

NO. ON SPLICES	STD CABLE SIZE DESIGNATION	RATING (MAX)	DIMENSIONS		
			OVERALL LENGTH (MIN)	OVERALL DIA. APPROX.	LENGTH EACH BARREL (MIN)
1 - 2	3/5 (1)	4	5/8	0.150	1/4
1 - 2	3/5 (7)	4	5/8	0.150	1/4
1 - 2	1 (1)	7	5/8	0.150	1/4
1 - 2	1 (7)	8	5/8	0.150	1/4
1 - 2	1 (10)	8	5/8	0.150	1/4
1 - 2	1-1/2 (1)	11	5/8	0.150	1/4
1 - 2	1-1/2 (7)	11	5/8	0.150	1/4
1 - 2	1-1/2 (16)	11	5/8	0.150	1/4
1 - 2	1-1/2 (41)	11	5/8	0.150	1/4
1 - 2	2 (7)	11	5/8	0.150	1/4
2-1/2 - 4	2-1/2 (1)	18	5/8	0.150	1/4
2-1/2 - 4	2-1/2 (19)	17	5/8	0.150	1/4
2-1/2 - 4	2-1/2 (26)	18	5/8	0.150	1/4
2-1/2 - 4	3 (7)	21	5/8	0.150	1/4
2-1/2 - 4	4 (1)	30	5/8	0.150	1/4
2-1/2 - 4	4 (19)	29	5/8	0.150	1/4
2-1/2 - 4	4 (41)	30	5/8	0.150	1/4
6 - 9	6 (7)	48	3/4	0.212	5/16
6 - 9	6 (19)	45	3/4	0.212	5/16
6 - 9	9 (7)	66	3/4	0.212	5/16
6 - 9	9 (37)	69	3/4	0.212	5/16
14	14 (7)	92	1-3/4	1/4	13/16
23	23 (7)	117	1-3/4	5/16	13/16
30	30 (19)	142	2-3/8	5/16	1-1/8
40	40 (19)	165	2-3/8	5/16	1-1/8
50	50 (19)	189	2-5/8	3/8	1-1/4
60	60 (37)	215	2-5/8	7/16	1-1/4
75	75 (37)	253	2-7/8	1/2	1-3/8
100	100 (61)	300	2-7/8	1/2	1-3/8
125	125 (61)	345	3-1/8	9/16	1-1/2
150	150 (61)	400	3-1/8	5/8	1-1/2
200	200 (61)	465	3-3/8	11/16	1-5/8
250	250 (61)	540	3-3/8	3/4	1-5/8
300	300 (91)	595	4-1/8	13/16	2
350	650 (91)	670	4-1/8	7/8	2
400	400 (127)	740	4-3/8	15/16	2-1/8
500	500 (127)	860	4-5/8	1-1/16	2-1/4
650	650 (127)	1000	5-3/4	1-1/4	2-13/16
800	800 (127)	1190	6	1-3/8	2-15/16
1000	1000 (127)	1375	6-1/8	1-1/2	3
1600	1600 (127)	1800	6-3/4	1-15/16	3-3/16

SPLICE, CONDUCTOR, DISCONNECT, CRIMP STYLE
COPPER, INSULATED BARREL, TYPE II, CLASS I
FOR 105°C TOTAL CONDUCTOR TEMPERATURE

MS27429

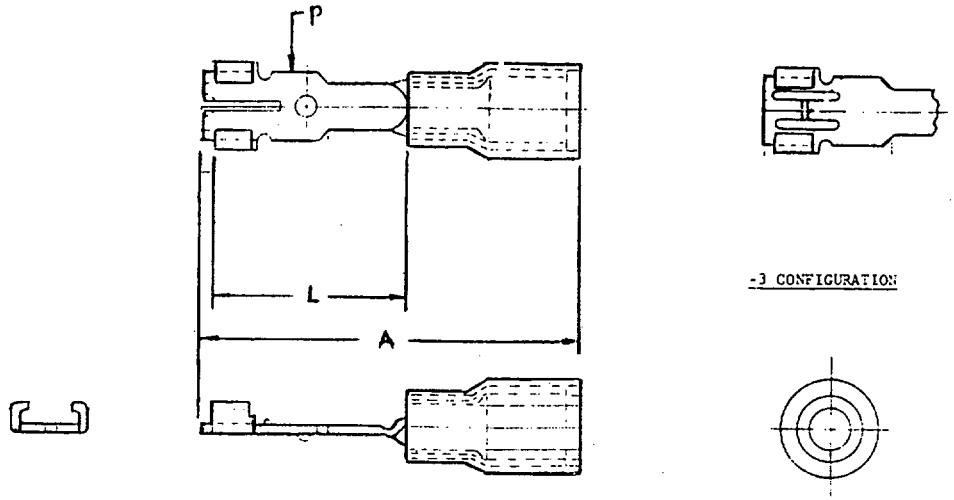

PART NO. MS27429-	WIRE SIZE	DIMENSIONS A MAX	L	P	BARREL COLOR
1	22 20 18	1.00	.540	.186	RED
2	16 14				BLUE
3	12 10	1.30	.760	.315	YELLOW

297

SPLICES, ELECTRIC, PERMANENT, CRIMP STYLE, COPPER, INSULATED, ENVIRONMENT, RESISTANT

MIL-S-81824

SCOPE: THIS SECTION COVERS ENVIRONMENT RESISTANT, PERMANENT CRIMP TYPE, SPLICES HAVING A HEAT SHRINKABLE INSULATING SLEEVE AND MELTABLE ENVIRONMENTAL SEALS. THEY MAY BE USED WITH TIN PLATED AND SILVER PLATED CONDUCTORS IN APPLICATIONS WHERE THE TOTAL TEMPERATURE OF THE WIRE INSULATION DOES NOT EXCEED 150 C. THESE SPLICES ARE INTENDED FOR USE IN MAKING ENVIRONMENTALLY PROTECTED PERMANENT JOINTS ON CONDUCTORS FALLING WITHIN THE DIAMETER RANGE SPECIFIED IN THE APPLICABLE SPECIFICATION SHEET HAVING INSULATIONS COMPATIBLE WITH THE SEALING MATERIAL.

PART NUMBER EXAMPLE: M81824 /1 -1

MILITARY SPECIFICATION — M81824

SLASH SHEET NUMBER — /1

DASH NUMBER — -1

SPLICES, ELECTRIC, PERMANENT, CRIMP STYLE, COPPER, INSULATED, ENVIRONMENT RESISTANT, CLASS I

MIL-S-81824/1

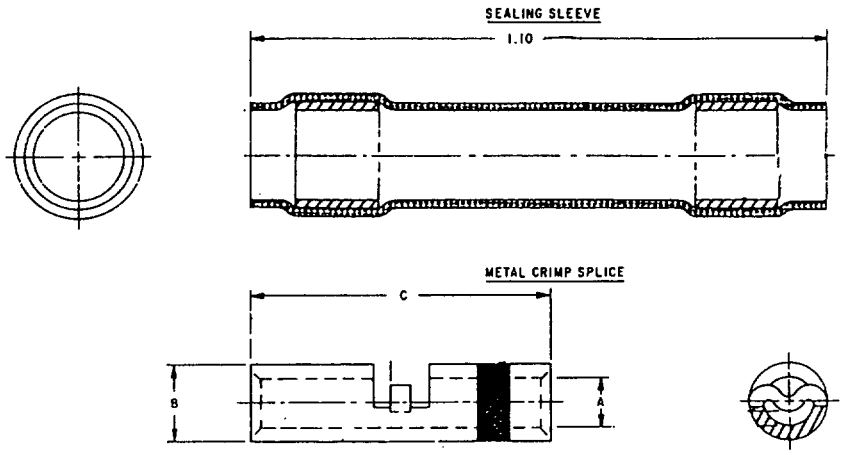

TABLE I. CONSTRUCTION DETAILS

PART NO. M81824/1-	WIRE RANGE	DIMENSIONS						COLOR CODE
		A		B		C		
		MAX	MIN	MAX	MIN	MAX	MIN	
1	26-24-22-20	.053	.045	.080	.075	.510	.490	RED
2	20-18-16	.070	.063	.107	.100	.585	.565	BLUE
3	16-14-12	.105	.095	.155	.146	.585	.565	YELLOW

GROMMETS, SYNTHETIC AND SILICONE RUBBER, HOT-OIL AND COOLANT RESISTANT

MS35489

SCOPE: THIS SECTION COVERS SYNTHETIC AND SILICONE RUBBER GROMMETS. THESE GROMMETS ARE INTENDED FOR USE WHERE GROMMETS ARE NEEDED TO BE HOT-OIL AND COOLANT RESTSTANT.

PART NUMBER EXAMPLE: MS35489-1X

MS35489 -1 X

MILITARY STANDARD

DASH NO. FOR SYNTHETIC RUBBER

SYMBOL "X" FOR SILICONE RUBBER
" " FOR SYNTHETIC RUBBER

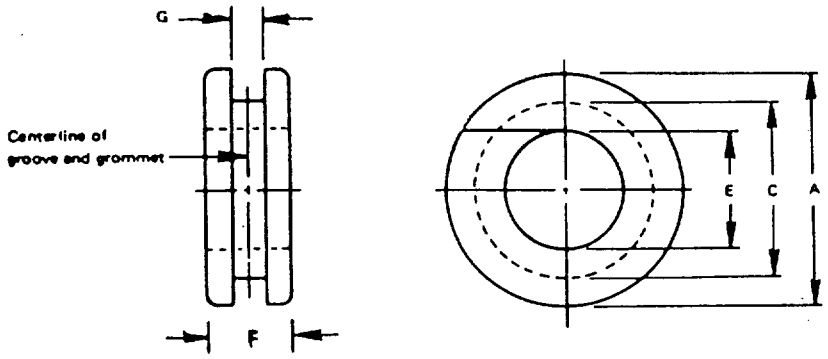

301

GROMMETS, SYNTHETIC AND SILICONE RUBBER, HOT-OIL AND COOLANT RESISTANT

MS35489

TABLE I. DIMENSIONS

GROOVE WIDTH G								DIMENSIONS (DIA)		
.062		.125		.188		.250				
PART NO. MS35489-	DIMEN. F	PART NO. MS35489-	DIMEN. F	PART NO. MS35489-	DIMEN. F	PART NO. MS35489-	DIMEN. F	E	C	A
1	.188							.125	.250	.344
2	.188	31	.250	60	.312	89	.375	.125	.562	.750
3	.250	32	.312	61	.375	90	.438	.125	1.000	1.250
4	.188	33	.250	62	.312	91	.375	.188	.312	.438
134	.188	137	.250	138	.312	139	.375	.188	.562	.750
5	.188	34	.250	63	.312	92	.375	.188	.625	.875
6	.188	35	.250	64	.312	93	.375	.250	.438	.625
7	.250	36	.312	65	.375	94	.438	.250	.750	1.000
8	.250	37	.312	66	.375	95	.438	.250	1.000	1.250
9	.312	38	.375	67	.438	96	.500	.312	.562	.812
10	.312	39	.375	68	.438	97	.500	.312	.750	1.000
118	.312	122	.375	136	.438	130	.500	.312	.812	1.062
11	.312	40	.375	69	.438	98	.500	.375	.625	.875
12	.250	41	.312	70	.375	99	.438	.375	1.000	1.250
13	.312	42	.375	71	.438	100	.500	.438	.688	.938
14	.312	43	.375	72	.438	101	.500	.500	.812	1.062
15	.250	44	.312	73	.375	102	.438	.500	1.250	1.500
16	.312	45	.375	74	.438	103	.500	.562	.812	1.062
17	.312	46	.375	75	.438	104	.500	.625	.875	1.125
18	.250	47	.312	76	.375	105	.438	.625	1.250	1.500
19	.375	48	.438	77	.500	106	.562	.688	1.000	1.312
20	.375	49	.438	78	.500	107	.562	.750	1.062	1.375
135	.250	123	.312	127	.375	131	.438	.750	1.250	1.625
21	.375	50	.438	79	.500	108	.562	.750	1.438	1.812
120	.375	124	.438	128	.500	132	.562	.750	1.625	2.000
22	.438	51	.500	80	.562	109	.625	.875	1.250	1.625
121	.438	125	.500	129	.562	133	.625	.875	1.625	2.000
23	.438	52	.500	81	.562	110	.625	1.000	1.375	1.750
24	.438	53	.500	82	.562	111	.625	1.000	1.875	2.250
25	.438	54	.500	83	.562	112	.625	1.250	2.375	2.750
26	.438	55	.500	84	.562	113	.625	1.250	2.500	2.875
27	.438	56	.500	85	.562	114	.625	1.500	1.750	2.125
28	.438	57	.500	86	.562	115	.625	1.500	2.750	3.250
29	.500	58	.562	87	.625	116	.688	1.750	3.250	3.750
30	.500	59	.562	88	.625	117	.688	2.000	3.500	4.000

WASHERS, ASSEMBLED AND CAPTIVE

MIL-N-25027

SCOPE: THIS SECTION COVERS ASSEMBLED AND CAPTIVE WASHERS, LISTED IN THE NUT SECTION (301), MIL-N-25027, MS21224, MS90415, AND MS14146. THESE WASHERS ARE INTENDED FOR USAGE THROUGHOUT THE DEPARTMENT OF THE NAVY.

PART NUMBER EXAMPLE: SEE EACH MILITARY STANDARD

(SEE PAGES 301.47 thru .49)

WASHER, FLAT - METAL, ROUND, GENERAL PURPOSE

MS15795

PART NUMBER: MS15795-801

MS15795 -801

MILITARY STANDARD

DASH NUMBER

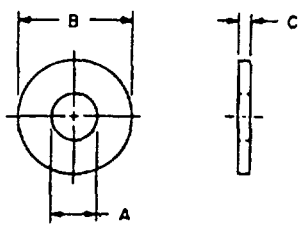

TABLE I. PART NUMBERS AND CHARACTERISTICS.

PART NUMBER MS15795-	DIMENSIONS		
	A	B	C MAX
801	.078	.186	.025
802	.094	.250	.025
806	.156	.375	.065
841	.188	.438	.065
842	.219	.500	.065
809	.250	.562	.080
810	.281	.625	.080
811	.312	.734	.080
812	.344	.688	.080
813	.375	.875	.104
814	.406	.812	.080
815	.438	1.000	.104
816	.469	.922	.080
817	.500	1.250	.104

WASHER, FLAT - METAL, ROUND, GENERAL PURPOSE

MS15795

TABLE I. PART NUMBERS AND CHARACTERISTICS (CONT.)

PART NUMBER MS15795-	DIMENSIONS		
	A	B	C MAX
818	.531	.062	.121
819	.562	1.375	.132
820	.656	1.312	.121
821	.688	1.750	.160
822	.812	1.469	.160
823	.812	2.000	.177
824	.938	1.750	.160
825	.938	2.250	.192
826	1.062	2.000	.160
827	1.062	2.500	.192
828	1.250	2.750	.192
829	1.375	3.000	.192
830	1.500	3.250	.213
831	1.625	3.500	.213
832	1.750	3.750	.213
833	1.875	4.000	.213
835	2.125	4.500	.213
836	2.375	4.750	.248
837	2.625	5.000	.280
838	2.875	5.250	.310
839	3.125	5.500	.327

WASHER, LOCK, FLAT-INTERNAL TOOTH

MS35333

PART NUMBER: MS35333-35

MS35333 -35

MILITARY STANDARD

DASH NUMBER

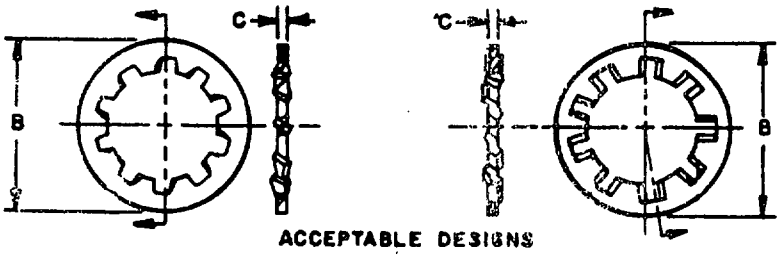

ACCEPTABLE DESIGNS

TABLE I. PART NUMBERS AND CHARACTERISTICS

PART NUMBER MS35333-			NOMINAL SIZE		DIMENSIONS	
CARBON	COMP-2	300 SER	NO.		B MAX	C MAX
35	69		2	.086	.200	.015
36	70	153	4	.112	.270	.019
37	71	154	6	.138	.295	.021
38	72	155	8	.164	.340	.023
39	73		10	.190	.381	.025
40	74		1/4	.250	.478	.028
41	75		5/16	.312	.610	.034
42	76		3/8	.375	.692	.040
43	77		7/16	.438	.789	.049
44	78		1/2	.500	.900	.045
46	80		5/8	.625	1.073	.050
47	81		3/4	.750	1.245	.055
48	82		7/8	.875	1.410	.060
	83		1	1.000	1.637	.067
	85		1-1/4	1.250	1.975	.067
	135	167	1/4	.250	.410	.020
	134		3/8	.375	.507	.030
	141		7/16	.437	.592	.020
	136		15/32	.468	.607	.023
	137		9/16	.563	.690	.023
	138		5/8	.625	.800	.027
	139		3/4	.750	1.077	.027
	140		1	1.000	1.390	.028

WASHER, LOCK, FLAT-EXTERNAL TOOTH

MS35335

PART NUMBER: MS35335-57

MS35335 -57

MILITARY STANDARD

DASH NUMBER

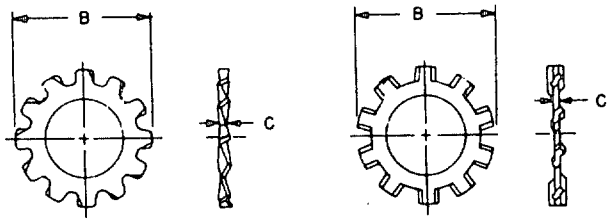

ACCEPTABLE DESIGNS

TABLE I. PART NUMBERS AND CHARACTERISTICS

PART NUMBER MS35335- PASSIVATED	NOMINAL SIZE NO.		DIMENSIONS B MAX	DIMENSIONS C MAX
57	4	.112	.260	.019
58	6	.138	.320	.022
59	8	.164	.381	.023
60	10	.190	.410	.025
61	1/4	.250	.510	.028
62	5/16	.312	.610	.034
63	3/8	.375	.694	.040
64	7/16	.438	.760	.040
65	1/2	.500	.900	.045
66	9/16	.562	.985	.045
67	5/8	.625	1.070	.050
68	3/4	.750	1.260	.055
69	7/8	.875	1.410	.060
70	1	1.000	1.620	.067

WASHER, LOCK-COUNTERSUNK, 80°-82°, EXTERNAL TOOTH

MS35336

PART NUMBER: MS35336-5

MS35336 -5

MILITARY STANDARD

DASH NUMBER

ACCEPTABLE DESIGNS

TABLE I. PART NUMBERS AND CHARACTERISTICS

PART NUMBER MS35336- PASSIVATED	NOMINAL SIZE NO.		DIMINSIONS (MAX) D	DIMINSIONS (MAX) C
5	4	.112	.065	.019
11	6	.138	.092	.021
17	8	.164	.105	.021
23	10	.190	.099	.025
29	1/4	.250	.128	.025
35	5/16	.312	.192	.028
41	3/8	.375	.255	.034
47	7/16	.438	.270	.045
53	1/2	.500	.304	.045

821.5

WASHER, LOCK-SPRING, HELICAL, REGULAR (MEDIUM) SERIES

MS35338

PART NUMBER: MS35338-134

MS35338 -134

MILITARY STANDARD

DASH NUMBER

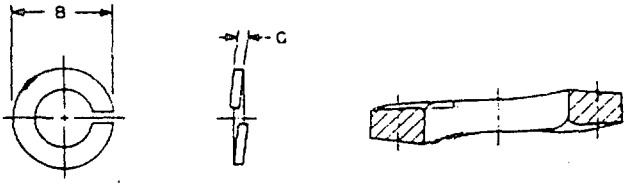

TABLE I. PART NUMBERS AND CHARACTERISTICS

PART NUMBER MS35338-	NOMINAL SIZE NO.		DIMENSIONS B MAX	DIMENSIONS C MIN
134	2	.086	.172	.020
135	2	.112	.209	.025
136	6	.138	.250	.031
137	8	.164	.293	.040
138	10	.190	.314	.047
139	1/4	.250	.489	.062
140	5/16	.312	.586	.078
141	3/8	.375	.681	.094
142	7/16	.438	.779	.109
143	1/2	.500	.873	.125
144	9/16	.562	.971	.156
145	5/8	.625	1.079	.188
146	3/4	.750	1.271	.188
147	7/8	.875	1.464	.219
148	1	1.000	1.661	.250
149	1-1/8	1.125	1.853	.281
150	1-1/4	1.250	2.045	.312
151	1-3/8	1.375	2.239	.344
152	1-1/2	1.500	2.430	.375

WASHER, LOCK-HELICAL, SPRING, HI-COLLAR

MS51848

PART NUMBER: MS51848-16

MS51848 -16

MILITARY STANDARD

DASH NUMBER

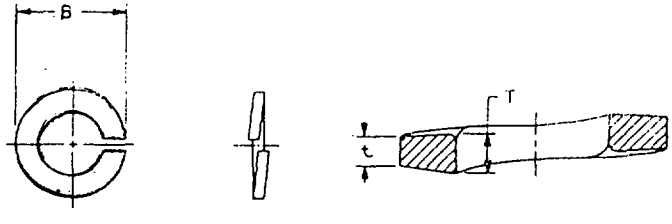

TABLE I. PART NUMBERS AND CHARACTERISTICS

PART NUMBER MS51848-	NOMINAL SIZE		DIMENSIONS B MAX	DIMENSIONS T AVG MIN
41	NO. 0	.0600	.092	.016
43	2	.0860	.135	.020
45	4	.1120	.173	.022
47	6	.1380	.216	.030
48	8	.1640	.267	.047
49	10	.1900	.204	.047
50	1/4	.2500	.365	.078
51	5/16	.3120	.460	.093
52	3/8	.3750	.553	.125
53	7/16	.4380	.647	.140
54	1/2	.5000	.737	.172
55	5/8	.6250	.923	.203
16	3/4	.7500	1.111	.218
17	7/8	.8750	1.296	.234
18	1	1.0000	1.483	.250

BEARINGS, ROLLER, NEEDLE, AIRFRAME, ANTIFRICTION, INCH

MIL-B-3990

SCOPE: THIS SECTION COVERS THE REQUIREMENTS FOR NON-SEPARABLE, ANTIFRICTION NEEDLE BEARINGS. THESE BEARINGS ARE INTENDED PRIMARILY FOR USE IN FLIGHT VEHICLE CONTROL SYSTEMS IN WHICH THE LOAD IS RADIAL.

BEARING, ROLLER, NEEDLE, SINGLE ROW, HEAVY DUTY, TYPE I, ANTIFRICTION, INCH

MS24461

PART NUMBER EXAMPLE: MS24461-28

MS24461 -28

MILITARY STANDARD NUMBER

DASH NUMBER

TABLE I. DIMENSIONS

PART NO. MS24461-	DIMENSIONS		
	A	D	B
3	.1900	.6875	.312
4	.2500	.7500	.375
5	.3125	.8125	.437
6	.3750	.8750	.562
7	.4375	.9375	.625
8	.5000	1.1250	.750
9	.5625	1.1875	.875
10	.6250	1.2500	1.000
12	.7500	1.3750	1.125
14	.8750	1.6250	1.250
16	1.0000	1.7500	1.250
20	1.2500	2.0000	1.250
24	1.5000	2.2500	1.250
28	1.7500	2.5000	1.250
32	2.0000	2.7500	1.250
36	2.2500	3.0000	1.250
40	2.5000	3.2500	1.250
44	2.7500	3.5000	1.250
60	3.7500	4.6250	1.250
80	5.0000	5.8750	1.250

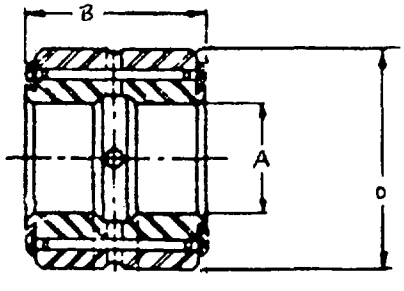

BEARING, ROLLER, NEEDLE, SINGLE ROW, HEAVY DUTY, SELF-ALIGNING, TYPE III, ANTIFRICTION, INCH

MS24463

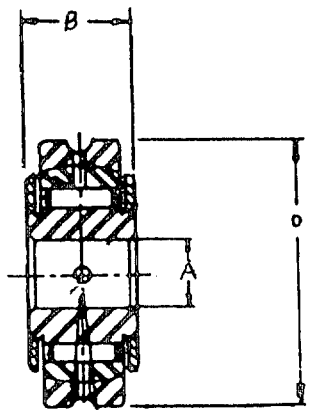

TABLE I. DIMENSIONS

PART NO. MS24463-	DIMENSIONS		
	A	D	B
3	0.1900	0.8750	0.312
4	0.2500	0.9375	0.375
5	0.3125	1.0625	0.437

BEARING, ROLLER, NEEDLE-DOUBLE ROW, HEAVY DUTY, SELF-ALIGNING, TYPE IV, ANTIFRICTION, INCH

MS24464

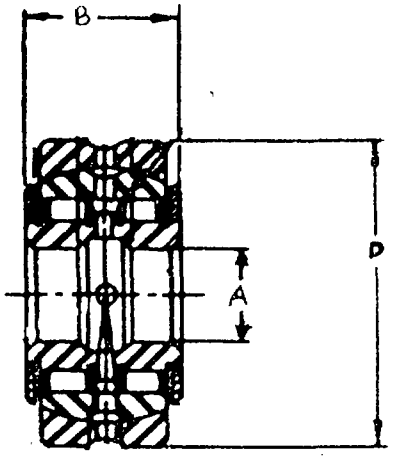

TABLE I. DIMENSIONS

PART NUMBER MS24464-	DIMENSIONS		
	A	D	B
6	.3750	1.1875	.562
7	.4375	1.3125	.625
8	.5000	1.5000	.750
9	.5625	1.6875	.875
10	.6250	1.7500	1.000
12	.7500	1.8750	1.125
14	.8750	2.1250	1.250
16	1.0000	2.2500	1.250
20	1.2500	2.5000	1.250
24	1.5000	2.7500	1.250
32	2.0000	3.2500	1.250

BEARINGS, ROLLER, NEEDLE, SINGLE ROW, HEAVY DUTY, TRACK ROLLER,SEALED, TYPE V, ANTIFRICTION, INCH

MS21438

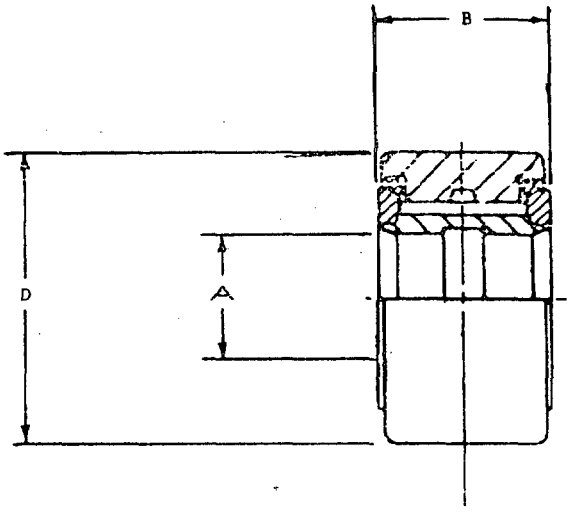

TABLE I. DIMENSIONS

PART NO. MS21438-	DIMENSIONS		
	A	D	B
103	.1900	.7500	.312
104	.2500	.8750	.375
106	.3750	1.0625	.500
108	.5000	1.3125	.625
110	.6250	1.5000	.750
112	.7500	1.7500	1.000
114	.8750	2.0000	1.125
120	1.2500	2.5000	1.250
124	1.5000	3.0000	1.500
128	1.7500	3.4375	1.500
132	2.0000	3.8750	1.500
136	2.2500	4.3125	1.500
140	2.5000	4.7500	1.500
144	2.7500	5.0000	1.500

BEARING, ROLLER, NEEDLE, DOUBLE ROW, HEAVY DUTY, TRACK ROLLER, SEALED, TYPE VI, ANTIFRICTION, INCH

MS21439

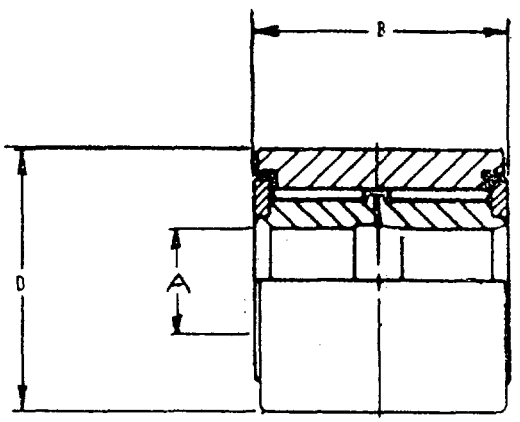

TABLE I. DIMENSIONS

PART NO. MS21439-	DIMENSIONS		
	A	D	B
106	.3750	1.1250	1.000
108	.5000	1.3750	1.250
110	.6250	1.6250	1.500
112	.7500	1.8750	1.750
114	.8750	2.1250	2.000
116	1.0000	2.3750	2.250
120	1.2500	2.7500	2.500
124	1.5000	3.0000	2.750
128	1.7500	3.4375	3.000
132	2.0000	3.8750	3.000

BEARING, ROLLER, NEEDLE, TRACK ROLLER, INTEGRAL STUD, TYPE VII, ANTIFRICTION, INCH

MS21432

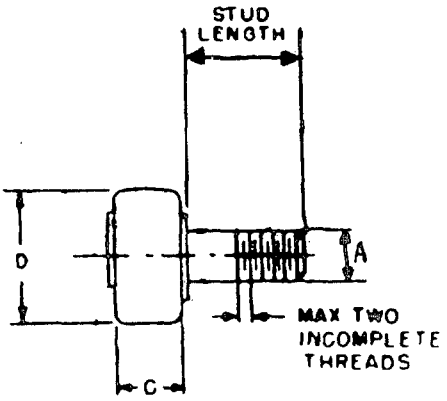

TABLE I. DIMENSIONS

PART NO. MS21432-	DIMENSIONS			THREAD SIZE UNJF-3A
	A	D	C	
3	.1900	.5000	.281	.1900-32
4	.2500	.6875	.281	.2500-28
5	.3125	.7500	.344	.3125-24
6	.3750	.8750	.469	.3750-24
7	.4375	1.0000	.531	.4375-20
8	.5000	1.1250	.656	.5000-20

BEARINGS, PLAIN, SELF-ALIGNING, SELF-LUBRICATING, LOW SPEED OSCILLATION

MIL-B-81820

SCOPE: THIS SECTION COVERS PLAIN SPHERICAL BEARINGS WHICH ARE SELF-ALIGNING AND SELF-LUBRICATING BY INCORPORATING TETRAFLUOROETHYLENE (TFE) IN A LINER BETWEEN THE BALL AND RACE (OUTER RING). THESE BEARINGS ARE INTENDED FOR USE IN THE TEMPERATURE RANGE -65°F TO +325°F. THESE BEARINGS ARE INTENDED PRIMARILY FOR USE IN AIRFRAME APPLICATIONS OF HIGH LOADS AT LOW ROTATIONAL OSCILLATORY SPEEDS.

PART NUMBER EXAMPLE: M14101-6CP

M14101 -6 C P

MILITARY STANDARD

SIZE - BORE DIAMETER

BALL MATERIAL "C" = PH13-8MO
" " = 440C

PLATING "P" = CADIUM PLATING
" " = NO PLATING

BEARING, PLAIN, SELF-ALIGNING, SELF-LUBRICATING, LOW SPEED, NARROW GROOVED OUTER RING

MS14101

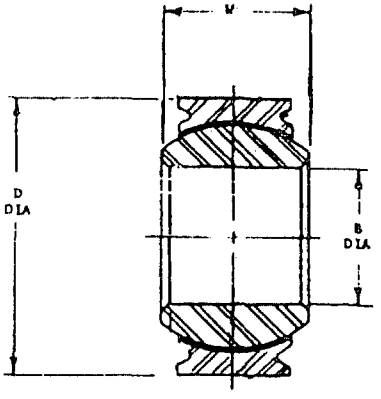

TABLE I. DIMENSIONS AND CHARACTERISTICS

PART NO. MS14101-	DIMENSIONS			STATIC LIMIT LOAD		OSCIL-LATING LOAD LB
	B	D	W	RADIAL LB	AXIAL LB	
3	.1900	.5625	.281	3975	150	1500
4	.2500	.6562	.343	6040	430	3320
5A	.3125	.7500	.375	8750	700	5460
6	.3750	.8125	.406	10540	1100	6600
7	.4375	.9062	.437	13200	1400	8050
8	.5000	1.0000	.500	17900	2100	10400
9	.5625	1.0937	.562	23200	3680	13000
10	.6250	1.1875	.625	30500	4720	16450
12	.7500	1.4375	.750	46400	6750	23600
14	.8750	1.5625	.875	62200	9350	30250
16	1.0000	1.7500	1.000	82200	12160	38000

BEARING, PLAIN, SELF-ALIGNING, SELF-LUBRICATING, LOW SPEED, NARROW, CHAMFERED OUTER RING

MS 14104

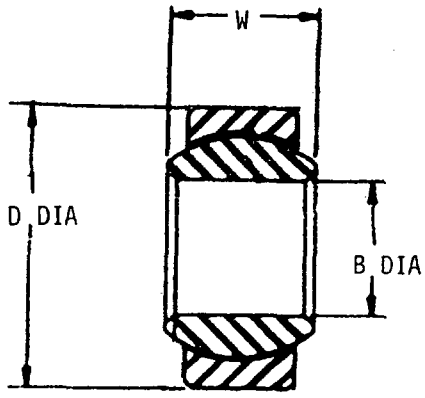

TABLE I. DIMENSIONS AND CHARACTERISTICS

PART NO. MS14104-	DIMENSIONS			STATIC LIMIT LOAD		OSCIL-LATING LOAD LB
	B	D	W	RADIAL LB	AXIAL LB	
3	.1900	.5625	.281	3975	150	1500
4	.2500	.6562	.343	6040	430	3320
5A	.3125	.7500	.375	8750	700	5460
6	.3750	.8125	.406	10540	1100	6600
7	.4375	.9062	.437	13200	1400	8050
8	.5000	1.0000	.500	17900	2100	10400
9	.5625	1.0937	.562	23200	3680	13000
10	.6250	1.1875	.625	30500	4720	16450
12	.7500	1.4375	.750	46400	6750	23600
14	.8750	1.5625	.875	62200	9350	30250
16	1.0000	1.7500	1.000	82200	12160	38000

BEARING, PLAIN, SELF-ALIGNING, SELF-LUBRICATING, LOW SPEED, WIDE, GROOVED OUTER RING

MS14103

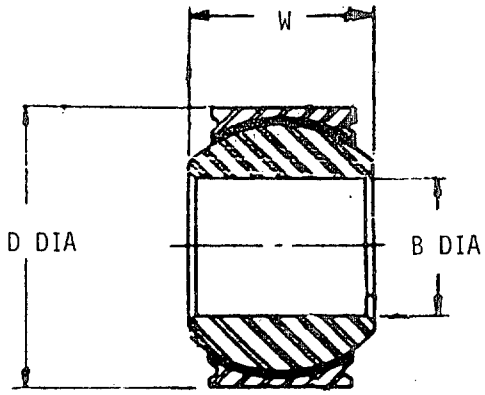

TABLE I. DIMENSIONS AND CHARACTERISTICS

PART NO. MS14103-	DIMENSIONS B	DIMENSIONS D	DIMENSIONS W	STATIC LIMIT LOAD RADIAL LB	STATIC LIMIT LOAD AXIAL LB	OSCIL-LATING LOAD LB
3	.1900	.6250	.437	2500	1770	4900
4	.2500	.6250	.437	5500	1770	4900
5	.3125	.6875	.437	9400	1640	6050
6	.3750	.8125	.500	13700	2630	8310
7	.4375	.9375	.562	20700	3650	11750
7A	.4375	.9062	.562	19700	3650	11750
8	.5000	1.0000	.625	21400	4970	14950
9	.5625	1.1250	.687	26600	5370	18100
10	.6250	1.1875	.750	29000	6130	20250
12	.7500	1.3750	.875	37000	7730	26200
14	.8750	1.6250	.875	65200	10800	33600
16	1.0000	2.1250	1.375	104000	19300	56250

BEARING, PLAIN, SELF-ALIGNING, SELF-LUBRICATING, LOW SPEED, NARROW, CHAMFERED OUTER RING

MS 14104

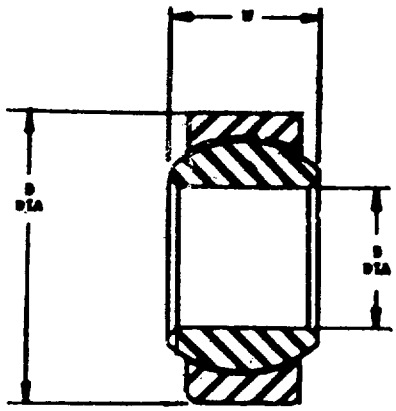

TABLE I. DIMENSIONS AND CHARACTERISTICS

PART NO. MS14104-	DIMENSIONS B	D	W	STATIC LIMIT LOAD RADIAL LB	AXIAL LB	OSCIL-LATING LOAD LB
3	.1900	.5625	.281	3975	150	1500
4	.2500	.6562	.343	6040	430	3320
5A	.3125	.7500	.375	8750	700	5460
6	.3750	.8125	.406	10540	1100	6600
7	.4375	.9062	.437	13200	1400	8050
8	.5000	1.0000	.500	17900	2100	10400
9	.5625	1.0937	.562	23200	3680	13000
10	.6250	1.1875	.625	30500	4720	16450
12	.7500	1.4375	.750	46400	6750	23600
14	.8750	1.5625	.875	62200	9350	30250
16	1.0000	1.7500	1.000	82200	12160	38000

18 July 1984

BEARINGS, PLAIN, SELF-ALIGNING, SELF-LUBRICATING

MIL-B-81935

SCOPE: THIS SECTION COVERS PLAIN ROD END BEARINGS WHICH ARE SELF-ALIGNING AND SELF-LUBRICATING BY INCORPORATING TETRAFLUORETHYLENE (TFE) IN A LINER BETWEEN THE INNER RING (BALL) AND OUTER RING (RACE) FOR USE IN THE TEMPERATURE RANGE -65°F TO +325°F. THESE BEARINGS ARE INTENDED PRIMARILY FOR USE IN AIRFRAME APPLICATIONS OF HIGH LOADS AT LOW ROTATIONAL OSCILLATORY SPEEDS. FOR SPECIFIC DESIGN INFORMATION ON THE CAPABILITY OF THESE BEARINGS UNDER PARTICULAR LOAD, SPEED AND WEAR/LIFE CONDITIONS, THE USER IS REFERRED TO MIL-STD-1599.

PART NUMBER EXAMPLE: M81935/1-3KL

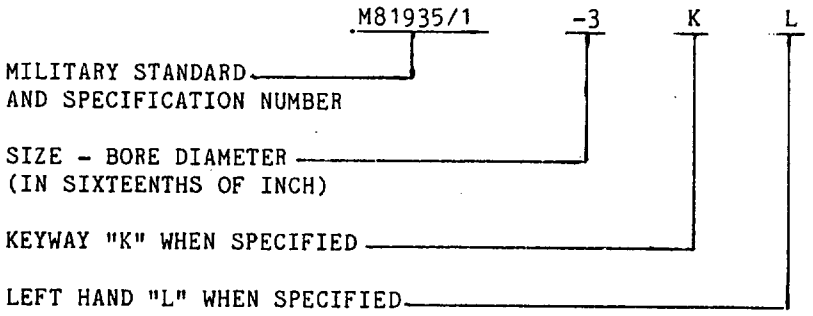

325

BEARING, PLAIN, ROD END, SELF-ALIGNING, SELF-LUBRICATING, EXTERNALLY THREADED

MIL-B-81935/1

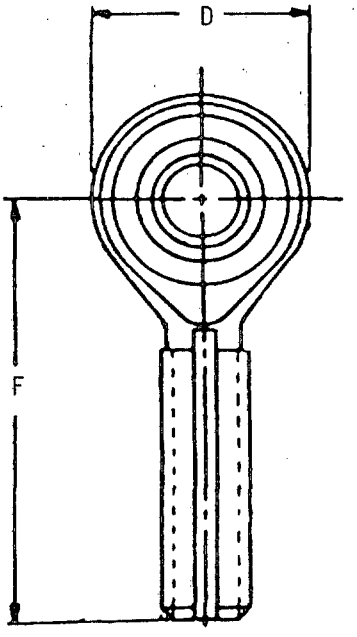

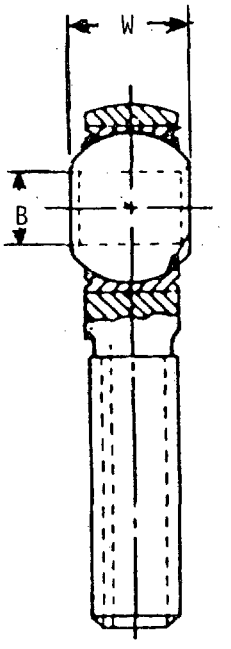

TABLE I. DIMENSIONS AND CHARACTERISTICS

PART NO. M81935/1-	THREAD PER MIL-S-8879 UNJF-3A	DIMENSIONS				ULTIMATE TENSILE STRENGTH LBS-MIN	DOUBLE SHEAR STRENGTH LBS-MIN
		B	D DIA	F	W		
3	.3125-24	.1900	.806	1.562	.437	2360	1470
4	.3125-24	.2500	.806	1.562	.437	4860	2380
5	.3125-24	.3125	.900	1.875	.437	7180	2770
6	.3750-24	.3750	1.025	1.938	.500	8550	3570
7	.4375-20	.4375	1.150	2.125	.562	12000	4800
8	.5000-20	.5000	1.337	2.438	.625	19500	7680
10	.6250-18	.6250	1.525	2.625	.750	21900	9180
12	.7500-16	.7500	1.775	2.875	.875	29300	11600
14	.8750-14	.8750	2.025	3.375	.875	34500	13100
16	1.2500-12	1.0000	2.775	4.125	1.375	80300	30400

BEARING, PLAIN, ROD END, SELF-ALIGNING, SELF-LUBRICATING, INTERNALLY THREADED

MIL-B-81935/2

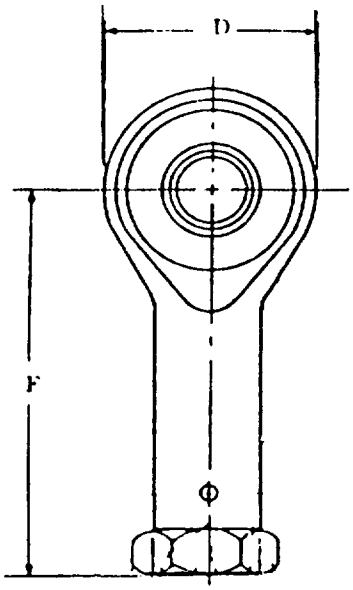

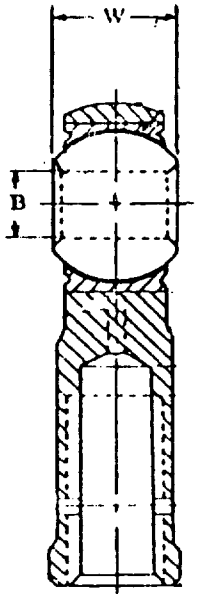

TABLE I. DIMENSIONS AND CHARACTERISTICS

PART NO. M81935/2-	THREAD PER MIL-S-8879 UNJF-3A	DIMENSIONS				ULTIMATE TENSILE STRENGTH LBS-MIN	DOUBLE SHEAR STRENGTH LBS-MIN
		B	D DIA	F	W		
3	.3125-24	.1900	.806	1.375	.437	2360	1470
4	.3125-24	.2500	.806	1.469	.437	4860	2380
5	.3750-24	.3125	.900	1.625	.437	7180	3020
6	.3750-24	.3750	1.025	1.812	.500	8550	3570
7	.4375-20	.4375	1.150	2.000	.562	12000	4800
8	.5000-20	.5000	1.337	2.250	.625	19500	8250
10	.6250-18	.6250	1.525	2.500	.750	21900	9180
12	.7500-16	.7500	1.775	2.875	.875	29300	11600
14	.8750-14	.8750	2.025	3.375	.875	34500	13100
16	1.2500-12	1.0000	2.775	4.125	1.375	80300	30400

855.3/855.4

BEARINGS, PLAIN, SELF-ALIGNING (BeCu BALL, CRES RACE)

MIL-B-81936

SCOPE: THIS SECTION COVERS AIRFRAME PLAIN SPHERICAL BEARINGS UTILIZING A BERYLLIUM-COPPER BALL AND CORROSION RESISTANT STEEL OUTER RACE FOR USE BETWEEN -65°F AND +350°F. THESE BEARINGS ARE INTENDED FOR USE IN AIRFRAME POWER-ACTUATED SYSTEMS DEVELOPING HIGH OSCILLATORY LOADS WHERE MODERATE FRICTION IS NOT OBJECTIONABLE AND WHERE RELUBRICATION PROVISIONS ARE AVAILABLE.

PART NUMBER EXAMPLE: M81820/1-4R

M81820/1 -4 R

MILITARY STANDARD AND SPECIFICATION NUMBER

SIZE - BORE DIAMETER (IN SIXTEENTHS OF INCH)

LUBRICANT GROOVES IN OUTER RACE ONLY (LEAVE BLANK WHEN NOT SPECIFIED)

BEARING, PLAIN, SELF-ALIGNING, BeCu BALL, CRES RACE (WITH STACKING GROOVE)

MIL-B-81936/1

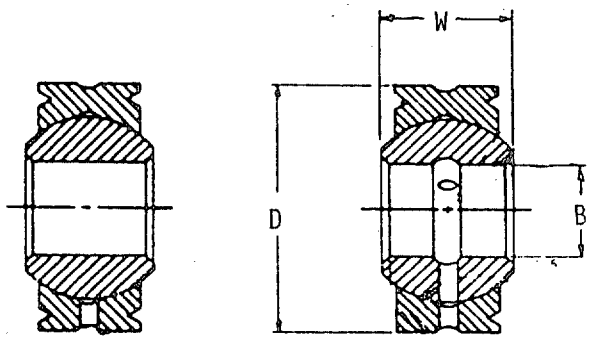

M81936/1( )R M81936/1( )

TABLE I. DIMENSIONS AND CHARACTERISTICS

PART NO. * M81936/1-	DIMENSIONS B	D DIA.	W	BALL DIA. MAX	STATIC LIMIT LOAD RADIAL LB	AXIAL LB
4	.2500	.6562	.343	.501	6330	1930
5	.3125	.7500	.375	.563	8460	2450
6	.3750	.8125	.406	.657	11400	3090
7	.4375	.9062	.437	.719	14800	3740
8	.5000	1.0000	.500	.814	20400	4860
9	.5625	1.0937	.562	.876	26700	6100
10	.6250	1.1875	.625	.969	33100	8080
12	.7500	1.4375	.750	1.188	50000	11440
13	.8125	1.5625	.812	1.282	59000	13800
14	.8750	1.6562	.875	1.376	70300	16160
16	1.0000	1.8750	1.000	1.563	77700	20850
18	1.1250	2.1250	1.125	1.751	121500	26740
20	1.2500	2.3125	1.250	1.938	152000	33065
22	1.3750	2.5625	1.375	2.157	186000	40120
24	1.5000	2.8125	1.500	2.345	224000	47820

* LUBE GROOVES AND OIL HOLES IN BALL AND RACE.
ADD "R" WHEN LUBE GROOVES AND OIL HOLES IN RACE ONLY.

BEARING, PLAIN, SELF-ALIGNING, BeCu BALL, CRES RACE

MIL-B-81936/2

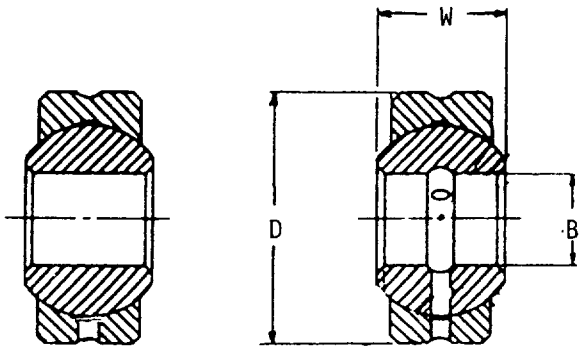

M81936/2( )R M81936/2( )

TABLE I. DIMENSIONS AND CHARACTERISTICS

PART NO. * M81936/2-	DIMENSIONS B	D DIA.	W	BALL DIA. MAX	STATIC LIMIT LOAD RADIAL LB	AXIAL LB
4	.2500	.6562	.343	.501	6330	1930
5	.3125	.7500	.375	.563	8460	2450
6	.3750	.8125	.406	.657	11400	3090
7	.4375	.9062	.437	.719	14800	3740
8	.5000	1.0000	.500	.814	20400	4860
9	.5625	1.0937	.562	.876	26700	6100
10	.6250	1.1875	.625	.969	33100	8080
12	.7500	1.4375	.750	1.188	50000	11440
13	.8125	1.5625	.812	1.282	59000	13800
14	.8750	1.6562	.875	1.376	70300	16160
16	1.0000	1.8750	1.000	1.563	77700	20850
18	1.1250	2.1250	1.125	1.751	121500	26740
20	1.2500	2.3125	1.250	1.938	152000	33065
22	1.3750	2.5625	1.375	2.157	186000	40120
24	1.5000	2.8125	1.500	2.345	224000	47820

* LUBE GROOVES AND OIL HOLES IN BALL AND RACE.
ADD "R" WHEN LUBE GROOVES AND OIL HOLES IN RACE ONLY.

857.3/857.4

BEARINGS, SLEEVE, PLAIN AND FLANGED, SELF-LUBRICATING

MIL-B-81934

SCOPE: THIS SECTION COVERS PLAIN AND FLANGED SLEEVE BEARINGS WHICH ARE SELF-LUBRICATING BY INCORPORATING TETRAFLUORETHYLENE (TFE) IN A LINER IN THE BORE FOR USE IN A TEMPERATURE RANGE OF -65°F TO +325°F. THESE BEARINGS ARE INTENDED PRIMARILY FOR USE IN AIRFRAME APPLICATIONS OF HIGH LOADS AT LOW ROTATIONAL OSCILLATORY SPEEDS. FOR SPECIFIC DESIGN INFORMATION ON THE CAPABILITY OF THESE BEARINGS UNDER PARTICULAR LOAD SPEED AND WEAR/LIFE CONDITIONS, THE USER IS REFERRED TO MIL-STD-1599.

PART NUMBER EXAMPLE: M81934/1-4A008

M81934/1 -4 A 008

MILITARY STANDARD AND SPECIFICATION NUMBER

SIZE - BORE DIAMETER (IN SIXTEENTHS OF INCH)

MATERIAL CODE
A = ALUMINUM ALLOY
C = (CRS) CORROSION RESISTANT STEEL

LENGTH (IN THIRTYSECONDS OF INCH)

BEARING, PLAIN, SLEEVE, SELF-LUBRICATING

MIL-B-81934/1

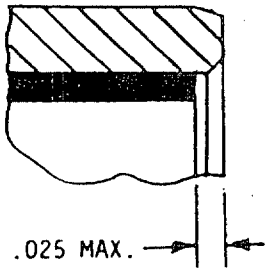

DETAIL A

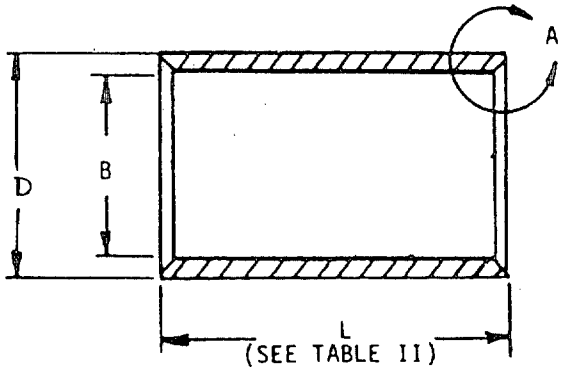

TABLE I. DIMENSIONS

PART NO. M81934/1-	NOMINAL SIZE	DIMENSIONS B	DIMENSIONS D
04	1/4	.2515	.3760
05	5/16	.3140	.4386
06	3/8	.3765	.5012
07	7/16	.4390	.5638
08	1/2	.5015	.6265
09	9/16	.5640	.6892
10	5/8	.6265	.8142
11	11/16	.6890	.8767
12	3/4	.7515	.9393
14	7/8	.8765	1.0645
16	1	1.0015	1.1898
18	1-1/8	1.1265	1.3148
20	1-1/4	1.2515	1.4398
22	1-3/8	1.3765	1.5648
24	1-1/2	1.5015	1.7523
26	1-5/8	1.6265	1.8773
28	1-3/4	1.7515	2.0023
32	2	2.0015	2.2523

TABLE II. LENGTH CHARACTERISTICS

L	BORE DIA. CODE RANGE	LENGTH CODE
.156	04 - 10	005
.187	04 - 10	006
.250	04 - 16	008
.281	04 - 16	009
.312	04 - 18	010
.343	04 - 18	011
.375	04 - 24	012
.437	04 - 24	014
.500	05 - 32	016
.562	05 - 32	018
.625	06 - 32	020
.687	06 - 32	022
.750	07 - 32	024
.875	07 - 32	028
1.000	09 - 32	032
1.125	09 - 32	036
1.250	10 - 32	040
1.375	10 - 32	044
1.500	11 - 32	048
1.625	11 - 32	052
1.750	16 - 32	056
1.875	16 - 32	060
2.000	20 - 32	064
2.125	20 - 32	068
2.250	24 - 32	072
2.375	24 - 32	076
2.500	24 - 32	080
2.750	24 - 32	088
3.000	26 - 32	096

FOR SPECIFIC LENGTH VS. NOMINAL SIZE AND PART NUMBER SEE MIL-B-81934/1

BEARING, FLANGED, SLEEVE, SELF-LUBRICATING

MIL-B-81934/2

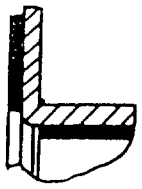

DETAIL A

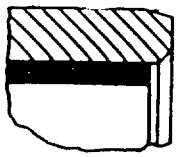

DETAIL B

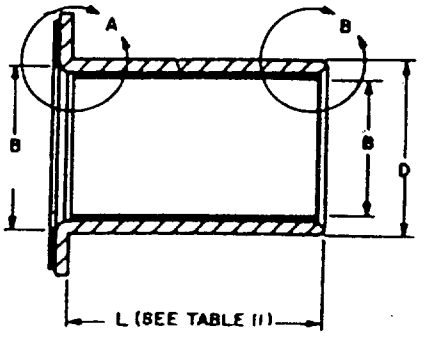

TABLE I. DIMENSIONS

PART NO. M81934/2-	NOMINAL SIZE	DIMENSIONS B	DIMENSIONS D
04	1/4	.2515	.3760
05	5/16	.3140	.4386
06	3/8	.3765	.5012
07	7/16	.4390	.5638
08	1/2	.5015	.6265
09	9/16	.5640	.6892
10	5/8	.6265	.8142
11	11/16	.6890	.8767
12	3/4	.7515	.9393
14	7/8	.8765	1.0645
16	1	1.0015	1.1898
18	1-1/8	1.1265	1.3148
20	1-1/4	1.2515	1.4398
22	1-3/8	1.3765	1.5648
24	1-1/2	1.5015	1.7523
26	1-5/8	1.6265	1.8773
28	1-3/4	1.7515	2.0023
32	2	2.0015	2.2523

TABLE II. LENGTH CHARACTERISTICS

L	BORE DIA. CODE RANGE	LENGTH CODE
.156	04 - 10	005
.187	04 - 10	006
.250	04 - 16	008
.281	04 - 16	009
.312	04 - 18	010
.343	04 - 18	011
.375	04 - 24	012
.437	04 - 24	014
.500	05 - 32	016
.562	05 - 32	018
.625	06 - 32	020
.687	06 - 32	022
.750	07 - 32	024
.875	07 - 32	028
1.000	09 - 32	032
1.125	09 - 32	036
1.250	10 - 32	040
1.375	10 - 32	044
1.500	11 - 32	048
1.625	11 - 32	052
1.750	16 - 32	056
1.875	16 - 32	060
2.000	20 - 32	064
2.125	20 - 32	068
2.250	24 - 32	072
2.375	24 - 32	076
2.500	24 - 32	080
2.750	24 - 32	088
3.000	26 - 32	096

FOR SPECIFIC LENGTH VS. NOMINAL SIZE AND PART NUMBER SEE MIL-B-81934/2

MIL-K-3926

MS91528

KNOBS, CONTROL

SCOPE: THIS SECTION COVERS GENERAL REQUIREMENTS FOR MANUALLY OPERATED CONTROL KNOBS AND ASSOCIATED KNOB LOCKS FOR USE WITH ELECTRONIC, COMMUNICATIONS, AND ALLIED EQUIPMENT.

PART NUMBER EXAMPLE: REGULAR MS91528-2K2B

MS91528- 2 K 2 B

MILITARY STANDARD NUMBER

SERIES
SEE DATA ON STYLE SHEETS

STYLE
SEE TABLE A.

SHAFT HOLE DIAMETER
SEE TABLE B.

COLOR
SEE TABLE C.

MIL-K-3926

MS91528

KNOBS, CONTROL

PART NUMBER EXAMPLE: CONCENTRIC MS91528-2N2BC

MS91528- 2 N 2 B C

MILITARY STANDARD NUMBER

SERIES
SEE DATA ON STYLE SHEETS

STYLE
SEE TABLE A.

SHAFT HOLE DIAMETER
SEE TABLE B.

COLOR
SEE TABLE C.

KNOB FORM
CONCENTRIC CODE: C

PART NUMBER EXAMPLE: TACTILE MS91528-2P2B7

MS91528- 2 P 2 B 7

MILITARY STANDARD NUMBER

SERIES
SEE DATA ON STYLE SHEETS

STYLE
SEE TABLE A.

SHAFT HOLE DIAMETER
SEE TABLE B.

COLOR
SEE TABLE C.

TACTILE FORM
SEE TABLE D.

MIL-K-3926 MS91528

TABLE A. STYLE CODES

A	BAR WITH WHITE LINE
B	DIAL SKIRTED BAR WITH WHITE LINE AND WHITE ARROW
C	ROUND WITH WHITE DOT
D	SKIRTED ROUND
E	SKIRTED ROUND WITH WHITE DOT
F	ROUND DIAL SKIRT WITH WHITE ARROW
G	ROUND DIAL SKIRT, NO ARROW
H	ROUND DIAL SKIRT WITH SLOT
I	ROUND WITH FLUORESCENT DOT
J	SKIRTED ROUND FLUORESCENT DOT
K	SKIRTED POINTER
L	BAR WITH WHITE LINE
M	DIAL SKIRTED BAR WITH WHITE LINE
N	ROUND
O	ROUND DIAL SKIRT WITH BLACKLIGHTED WHITE ARROW
P	PLAIN POINTER
Q	ROUND DIAL SKIRT WITH FLUORESCENT ARROW
R	DIAL SKIRTED BAR WITH WHITE LINE AND SLOT
S	SPINNER
T	PLAIN POINTER WITH WHITE LINE
U	SKIRTED POINTER WITH WHITE LINE
V	DIAL SKIRTED BAR WITH SHITE LINE AND TRANSLUCENT ARROW.
W	BAR WITH FLUORESCENT LINE
X	DIAL SKIRTED BAR WITH FLUORESCENT LINE AND FLUORESCENT ARROW
Y	DIAL SKIRTED BAR WITH FLUORESCENT LINE AND SLOT
Z	DIAL SKIRTED BAR WITH FLUORESCENT LINE AND TRANSLUCENT ARROW
AA	ROUND KNOB LOCK POINTER WITH WHITE LINE
AB	DIAL SKIRTED BAR WITH PHOSPHORESCENT LINE AND PHOSPHORESCENT ARROW
AC	DIAL SKIRTED BAR WITH PHOSPHORESCENT LINE AND SLOT
AD	DIAL SKIRTED BAR WITH PHOSPHORESCENT LINE AND TRANSLUCENT ARROW
BB	ROUND KNOB LOCK POINTER WITH FLORESCENT LINE
GG	ROUND BAR WITH WHITE LINE
HH	ROUND BAR RING SKIRTED WITH WHITE LINE
II	ROUND BAR DIAL SKIRTED WITH WHITE LINE
JJ	ROUND BAR WITH FLUORESCENT LINE
KK	ROUND BAR RING SKIRTED WITH FLUORESCENT LINE
LL	ROUND BAR DIAL SKIRTED WITH FLUORESCENT LINE
MM	ROUND WITH PHOSPHORESCENT DOT
NN	SKIRTED ROUND PHOSPHORESCENT DOT
OO	ROUND DIAL SKIRT WITH PHOSPHORESCENT ARROW
PP	ROUND BAR RING SKIRTED WITH PHOSPHORESCENT LINE
QQ	ROUND KNOB LOCK POINTER WITH PHOSPHORESCENT LINE
RR	PLAIN POINTER WITH PHOSPHORESCENT LINE
SC	SPINNER SLIP-CLUTCH WITH SHITE DOT
SS	ROUND BAR WITH PHOSPHORESCENT LINE
TT	PLAIN POINTER WITH FLUORESCENT LINE
UU	SKIRTED POINTER WITH FLUORESCENT LINE
VV	ROUND BAR DIAL SKIRTED WITH PHOSPHORESCENT LINE
WW	SKIRTED POINTER WITH PHOSPHORESCENT LINE
XX	BAR WITH PHOSPHORESCENT LINE
YY	DIAL SKIRTED BAR WITH PHOSPHORESCENT LINE
ZZ	DIAL SKIRTED BAR WITH FLUORESCENT LINE

MIL-K-3926 MS91528

TABLE B. SHAFT HOLE DIAMETER CODES

CODE	DESCRIPTION
1	1/8 IN. ROUND
2	1/4 IN. ROUND
3	1/8 IN. D FLAT
4	1/4 IN. D FLAT

TABLE C. COLOR CODES

CODE	COLOR
B	BLACK
G	GRAY
R	RED

TABLE D. TACTILE FORM CODES

CODE	TACTICLE FORM
1	1
2	2
3	3
4	4
5	5
6	6
7	7
8	8
9	9

TACTILE FORMS

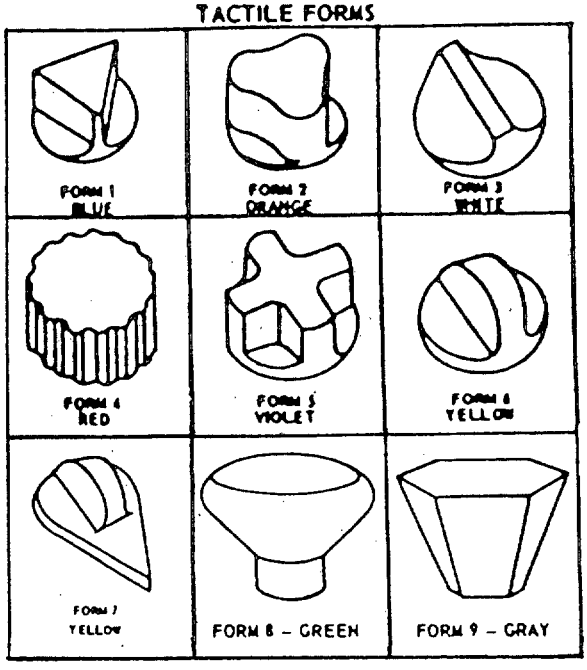

KNOBS-CONTROL, PLASTIC (ROUND, CONCENTRIC, POINTER, SPINNER, SPINNER SLIP-CLUTCH, BAR, TACTILE, KNOB LOCK POINTER, SLIP-CLUTCH, AND KNOB LOCKS)

MIL-K-3926

ROUND KNOBS

MS91528

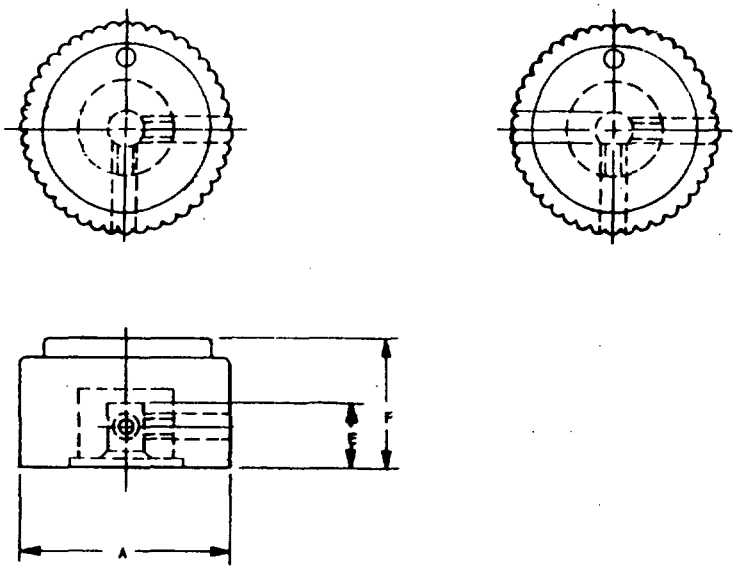

TABLE I. PART NUMBER AND DIMENSIONS

MS91528-SERIES	DIMENSIONS		
	A	E(MIN)	F
0	.500	.405	.510
1	.700	.405	.610
2	.900	.520	.790
3	1.250	.455	.700
4	1.750	.520	.850
5	2.250	.520	.875

STYLE: N, C, I, MM
SHAFT HOLE DIA: 1, 2, 3, 4
COLOR: B, G, R

SEE TABLES A, B, C.

KNOBS-CONTROL, PLASTIC (ROUND, CONCENTRIC, POINTER, SPINNER, SPINNER SLIP-CLUTCH, BAR, TACTILE, KNOB LOCK POINTER, SLIP-CLUTCH, AND KNOB LOCKS)

MIL-K-3926

ROUND RING SKIRT KNOBS

MS91528

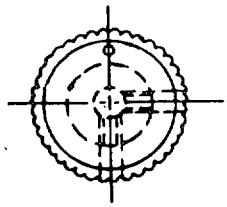

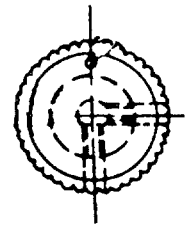

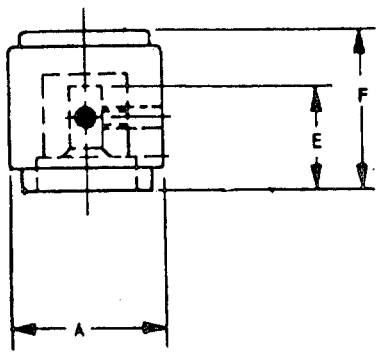

TABLE I. PART NUMBER AND DIMENSIONS

MS91528-SERIES	DIMENSIONS		
	A	E(MIN)	F
0	.500	.560	.655
1	.700	.568	.782
2	.900	.730	1.010
3	1.250	.605	.850
4	1.750	.740	1.070
5	2.250	.740	1.095

STYLE: D, E, J, NN
SHAFT HOLE DIA: 1, 2, 3, 4
COLOR: B, G, R

SEE TABLES A, B, C.

KNOBS-CONTROL, PLASTIC (ROUND, CONCENTRIC, POINTER, SPINNER, SPINNER SLIP-CLUTCH, BAR, TACTILE, KNOB LOCK POINTER, SLIP-CLUTCH, AND KNOB LOCKS)

MIL-K-3926

ROUND DIAL SKIRT KNOBS

MS91528

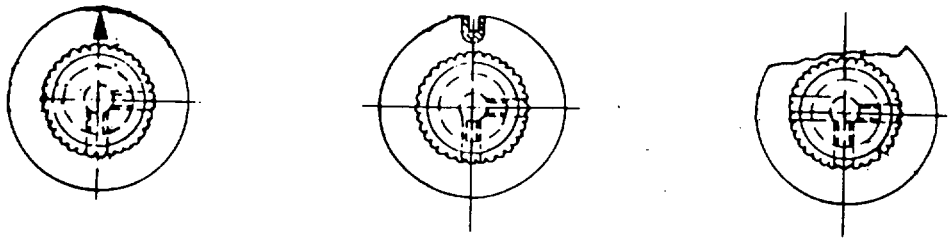

STYLE H

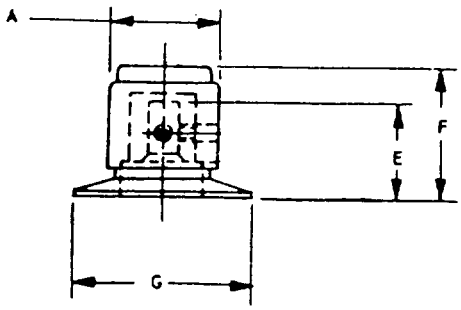

TABLE I. PART NUMBER AND DIMENSIONS

MS91528-SERIES	DIMENSIONS			
	A	E(MIN)	F	G
0	.500	.560	.655	.900
1	.700	.568	.782	1.150
2	.900	.730	1.010	1.525
3	1.250	.605	.850	1.837
4	1.750	.740	1.070	2.468
5	2.250	.740	1.095	3.020

STYLE: F, G, H, O, Q, OO
SHAFT HOLE DIA: 1, 2, 3, 4 SEE TABLES A, B, C.
COLOR: B, G, R

KNOBS-CONTROL, PLASTIC (ROUND, CONCENTRIC, POINTER, SPINNER, SPINNER SLIP-CLUTCH, BAR, TACTILE, KNOB LOCK POINTER, SLIP-CLUTCH, AND KNOB LOCKS)

MIL-K-3926

KNOB LOCK POINTER KNOBS

MS91528

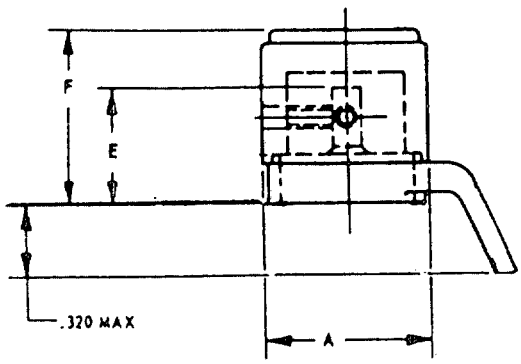

TABLE I. PART NUMBER AND DIMENSIONS

MS91528-SERIES	DIMENSIONS		
	A	E(MIN)	F
1	.700	.568	.782
2	.900	.680	.958
3	1.250	.605	.862

STYLE: AA, BB, QQ
SHAFT HOLE DIA: 1, 2, 3, 4
COLOR: B, G, R

SEE TABLES A, B, C.

KNOBS-CONTROL, PLASTIC (ROUND, CONCENTRIC, POINTER, SPINNER, SPINNER SLIP-CLUTCH, BAR, TACTILE, KNOB LOCK POINTER, SLIP-CLUTCH, AND KNOB LOCKS)

MIL-K-3926

ROUND BAR KNOBS

MS91528

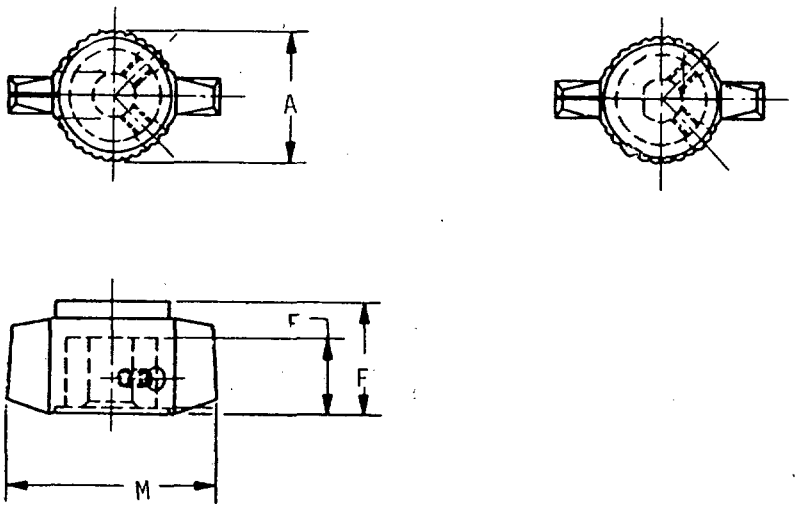

TABLE I. PART NUMBER AND DIMENSIONS

MS91528-SERIES	DIMENSIONS			
	A	E(MIN)	F	M
1	.700	.405	.610	1.150

STYLE: GG, JJ, SS
SHAFT HOLE DIA: 1, 2, 3, 4
COLOR: B, G, R

SEE TABLES A, B, C.

KNOBS-CONTROL, PLASTIC (ROUND, CONCENTRIC, POINTER, SPINNER, SPINNER SLIP-CLUTCH, BAR, TACTILE, KNOB LOCK POINTER, SLIP-CLUTCH, AND KNOB LOCKS)

MIL-K-3926

ROUND BAR RING SKIRT KNOBS

MS91528

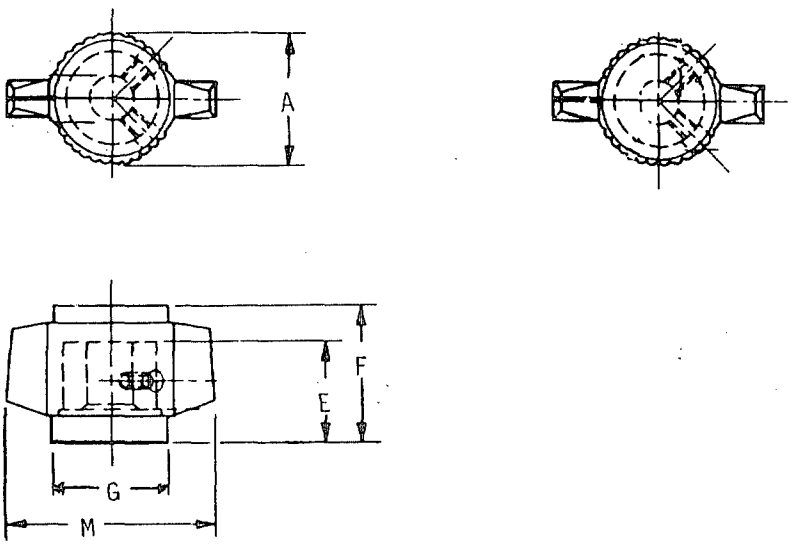

TABLE I. PART NUMBER AND DIMENSIONS

MS91528-SERIES	DIMENSIONS				
	A	E(MIN)	F	G	M
1	.700	.568	.782	.680	1.150

STYLE: HH, KK, PP
SHAFT HOLE DIA: 1, 2, 3, 4 SEE TABLES A, B, C.
COLOR: B, G, R

KNOBS-CONTROL, PLASTIC (ROUND, CONCENTRIC, POINTER, SPINNER, SPINNER SLIP-CLUTCH, BAR, TACTILE, KNOB LOCK POINTER, SLIP-CLUTCH, AND KNOB LOCKS)

MIL-K-3926

ROUND BAR DIAL SKIRT KNOBS

MS91528

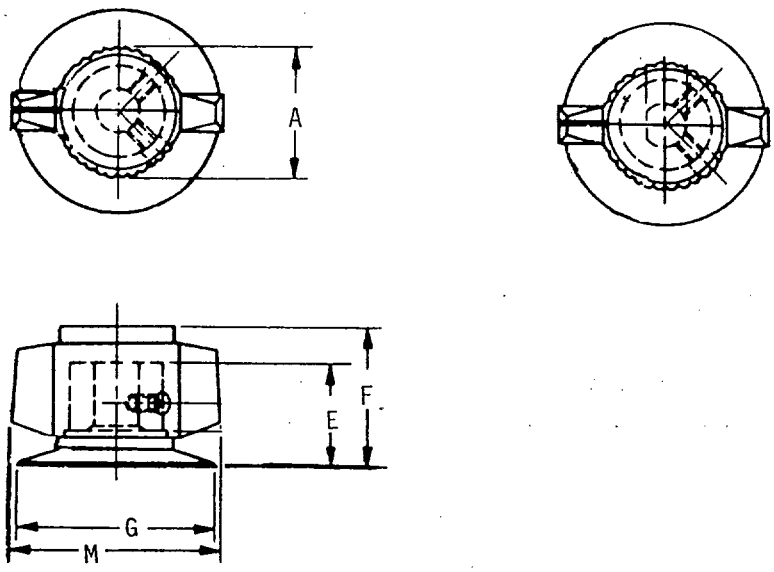

TABLE I. PART NUMBER AND DIMENSIONS

MS91528-SERIES	DIMENSIONS				
	A	E(MIN)	F	G	M
1	.700	.568	.782	1.150	1.150

STYLE: II, LL, VV
SHAFT HOLE DIA: 1, 2, 3, 4
COLOR: B, G, R

SEE TABLES A, B, C.

KNOBS-CONTROL, PLASTIC (ROUND, CONCENTRIC, POINTER, SPINNER, SPINNER SLIP-CLUTCH, BAR, TACTILE, KNOB LOCK POINTER, SLIP-CLUTCH, AND KNOB LOCKS)

MIL-K-3926

POINTER KNOBS

MS91528

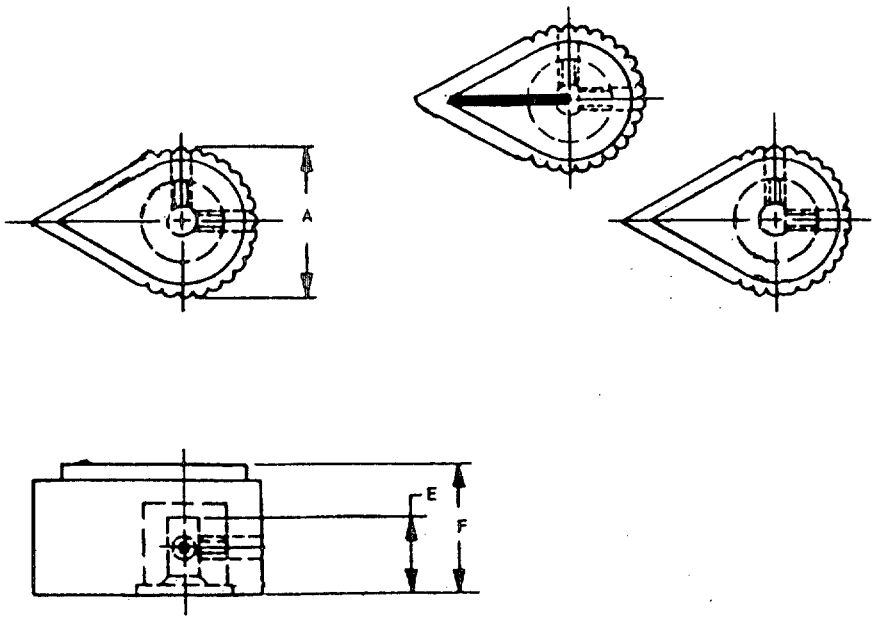

TABLE I. PART NUMBER AND DIMENSIONS

MS91528-SERIES	DIMENSIONS		
	A	E(MIN)	F
0	.500	.405	.510
1	.700	.405	.610
2	.900	.520	.790

STYLE: P, T, TT, RR
SHAFT HOLE DIA: 1, 2, 3, 4
COLOR: B, G, R

SEE TABLES A, B, C.

KNOBS-CONTROL, PLASTIC (ROUND, CONCENTRIC, POINTER, SPINNER, SPINNER SLIP-CLUTCH, BAR, TACTILE, KNOB LOCK POINTER, SLIP-CLUTCH, AND KNOB LOCKS)

MIL-K-3926

POINTER RING SKIRT KNOBS

MS91528

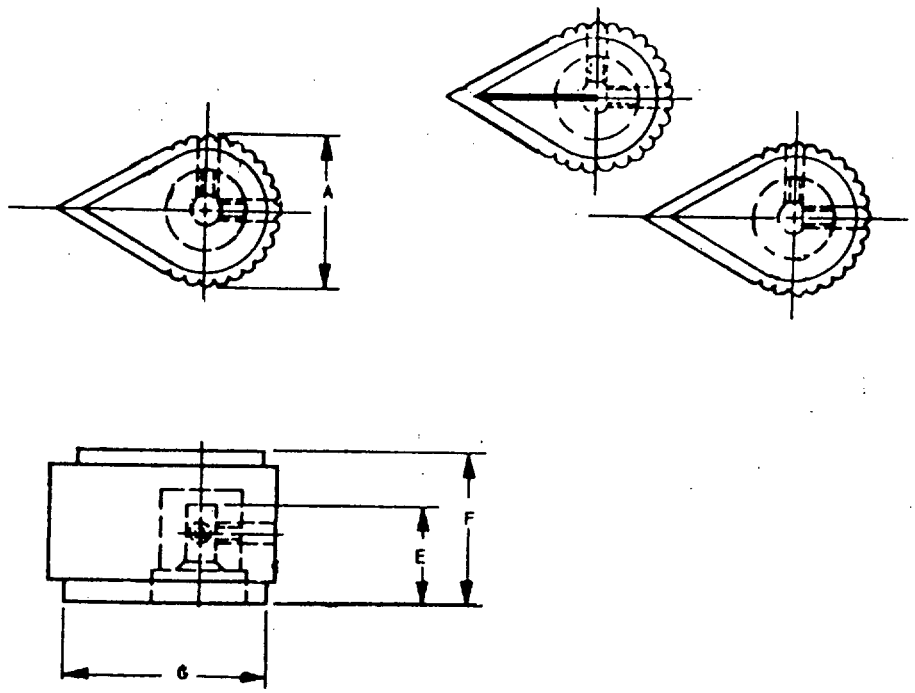

TABLE I. PART NUMBER AND DIMENSIONS

MS91528-SERIES	DIMENSIONS			
	A	E(MIN)	F	G
0	.500	.560	.690	.690
1	.700	.568	.782	1.000
2	.900	.730	1.010	1.345

STYLE: K, U, UU, WW
SHAFT HOLE DIA: 1, 2, 3, 4 SEE TABLES A, B, C.
COLOR: B, G, R

KNOBS-CONTROL, PLASTIC (ROUND, CONCENTRIC, POINTER, SPINNER, SPINNER SLIP-CLUTCH, BAR, TACTILE, KNOB LOCK POINTER, SLIP-CLUTCH, AND KNOB LOCKS)

MIL-K-3926

BAR KNOBS

MS91528

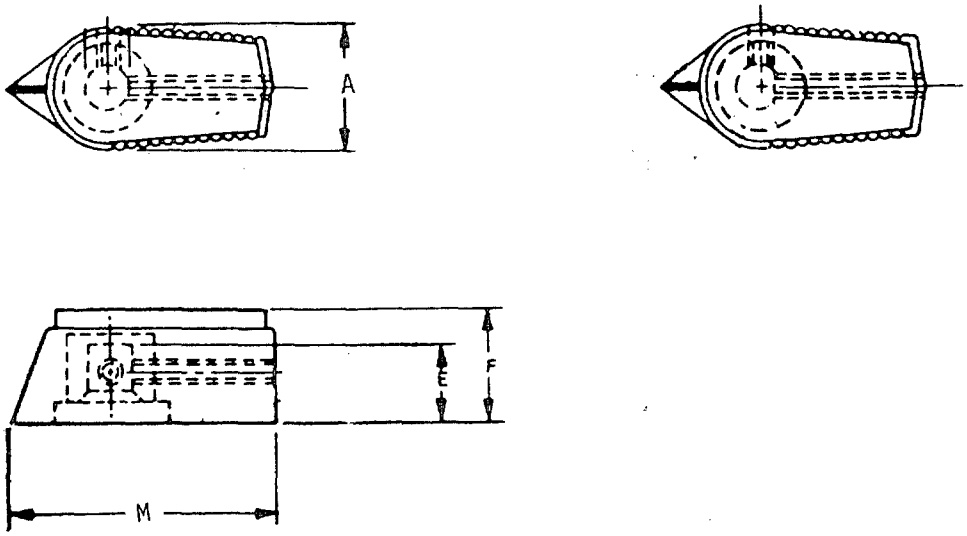

TABLE I. PART NUMBER AND DIMENSIONS

MS91528-SERIES	DIMENSIONS			
	A	E(MIN)	F	M
1	.700	.445	.645	1.515

STYLE: A, W, XX
SHAFT HOLE DIA: 2, 4
COLOR: B, G, R

SEE TABLES A, B, C.

KNOBS-CONTROL, PLASTIC (ROUND, CONCENTRIC, POINTER, SPINNER, SPINNER SLIP-CLUTCH, BAR, TACTILE, KNOB LOCK POINTER, SLIP-CLUTCH, AND KNOB LOCKS)

MIL-K-3926

BAR DIAL SKIRT KNOBS

MS91528

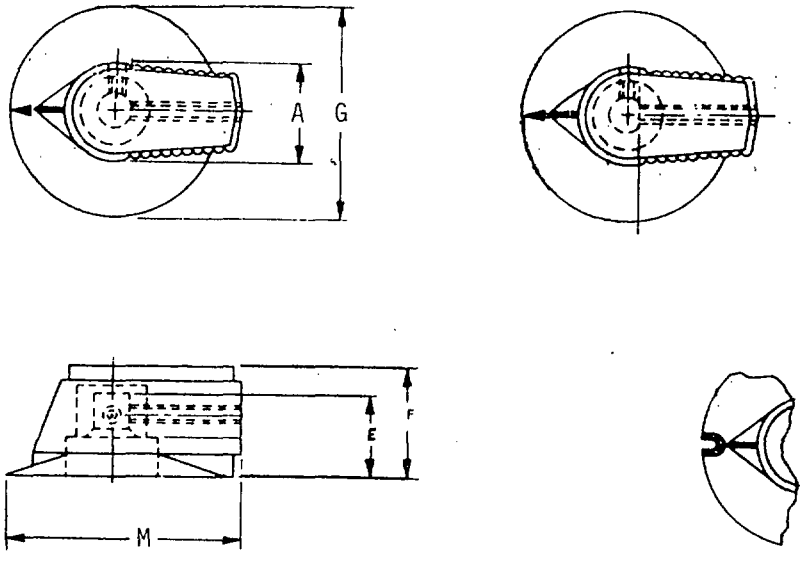

TABLE I. PART NUMBER AND DIMENSIONS

MS91528-SERIES	DIMENSIONS				
	A	E(MIN)	F	G	M
1	.700	.590	.815	1.520	1.720

STYLE: B, R, V, X, Y, Z, AB, AC, AD
SHAFT HOLE DIA: 2, 4 SEE TABLES A, B, C.
COLOR: B, G, R

KNOBS-CONTROL, PLASTIC (ROUND, CONCENTRIC, POINTER, SPINNER, SPINNER SLIP-CLUTCH, BAR, TACTILE, KNOB LOCK POINTER, SLIP-CLUTCH, AND KNOB LOCKS)

MIL-K-3926

BAR ANTI-PARALLAX KNOBS

MS91528

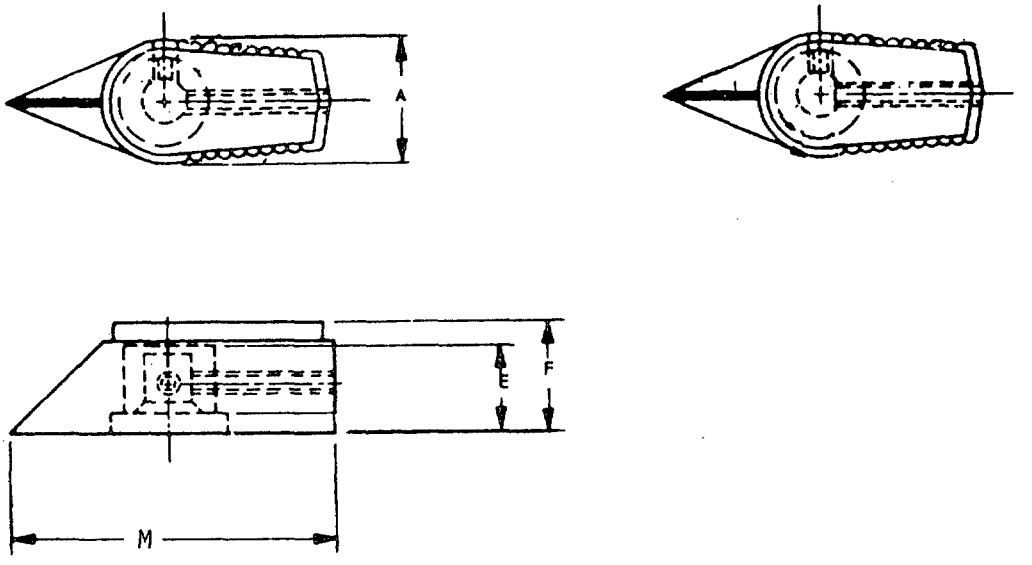

TABLE I. PART NUMBER AND DIMENSIONS

MS91528-SERIES	DIMENSIONS			
	A	E(MIN)	F	M
1	.700	.445	.645	1.855

STYLE: L, W, XX
SHAFT HOLE DIA: 2, 4
COLOR: B, G, R

SEE TABLES A, B, C.

KNOBS-CONTROL, PLASTIC (ROUND, CONCENTRIC, POINTER, SPINNER, SPINNER SLIP-CLUTCH, BAR, TACTILE, KNOB LOCK POINTER, SLIP-CLUTCH, AND KNOB LOCKS)

MIL-K-3926

BAR ANTI-PARALLAX DIAL SKIRT KNOBS

MS91528

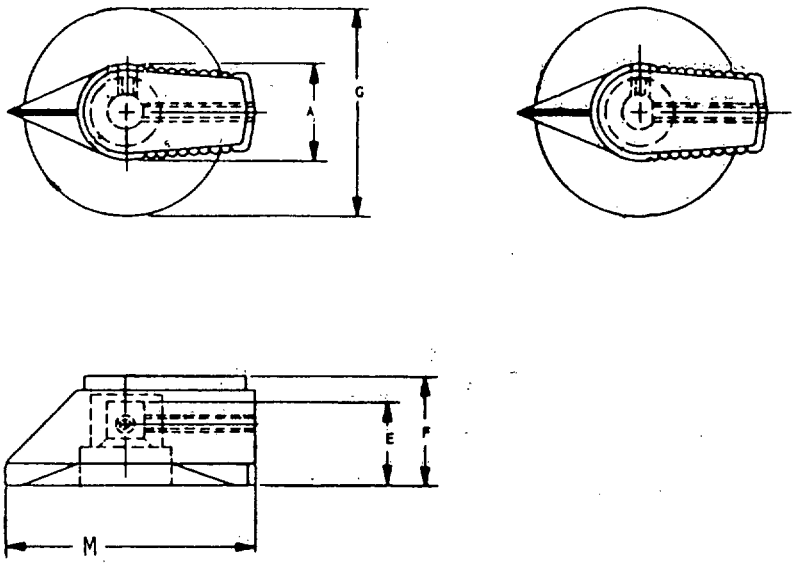

TABLE I. PART NUMBER AND DIMENSIONS

MS91528-SERIES	DIMENSIONS				
	A	E(MIN)	F	G	M
2	.700	.590	.815	1.520	1.870

STYLE: M, ZZ, YY
SHAFT HOLE DIA: 2, 4
COLOR: B, G, R

SEE TABLES A, B, C.

KNOBS-CONTROL, PLASTIC (ROUND, CONCENTRIC, POINTER, SPINNER, SPINNER SLIP-CLUTCH, BAR, TACTILE, KNOB LOCK POINTER, SLIP-CLUTCH, AND KNOB LOCKS)

MIL-K-3926

BAR KNOBS

MS91528

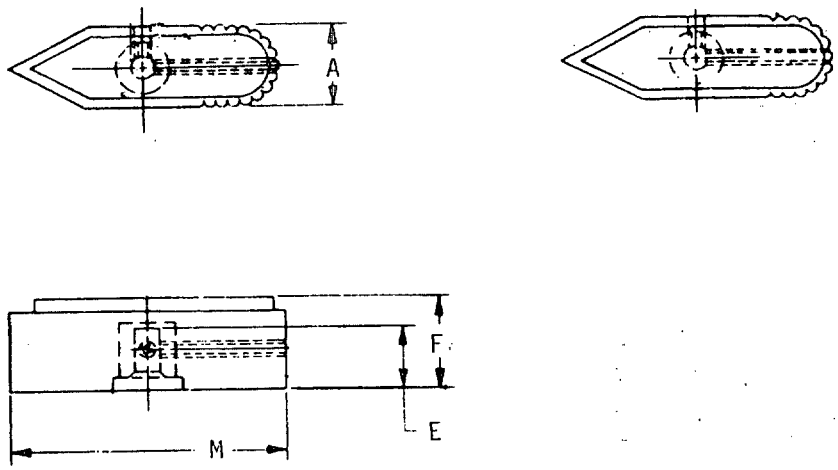

TABLE I. PART NUMBER AND DIMENSIONS

MS91528-SERIES	DIMENSIONS			
	A	E(MIN)	F	M
3	.788	.739	.869	2.552

STYLE: R
SHAFT HOLE DIA: 2, 4
COLOR: B, G, R

SEE TABLES A, B, C.

KNOBS-CONTROL, PLASTIC (ROUND, CONCENTRIC, POINTER, SPINNER, SPINNER SLIP-CLUTCH, BAR, TACTILE, KNOB LOCK POINTER, SLIP-CLUTCH, AND KNOB LOCKS)

MIL-K-3926

SPINNER KNOBS

MS91528

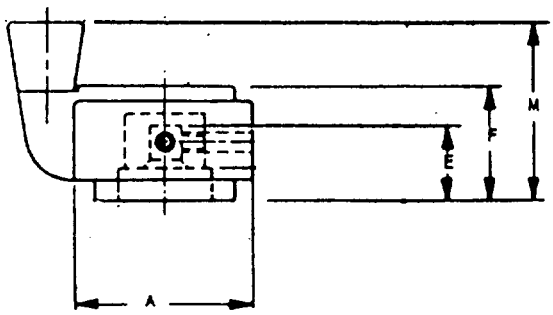

TABLE I. PART NUMBER AND DIMENSIONS

MS91528-SERIES	DIMENSIONS			
	A	E(MIN)	F	M
3	1.250	.605	.850	1.350
4	1.750	.740	1.070	1.758
5	2.250	.740	1.095	1.782

STYLE: S
SHAFT HOLE DIA: 2, 4
COLOR: B, G, R

SEE TABLES A, B, C.

355

KNOBS-CONTROL, PLASTIC (ROUND, CONCENTRIC, POINTER, SPINNER, SPINNER SLIP-CLUTCH, BAR, TACTILE, KNOB LOCK POINTER, SLIP-CLUTCH, AND KNOB LOCKS)

MIL-K-3926

SPINNER SLIP CLUTCH KNOBS

MS91528

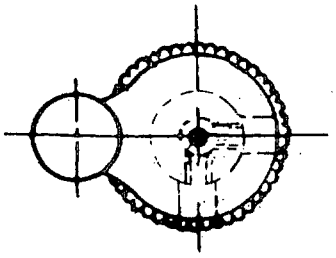

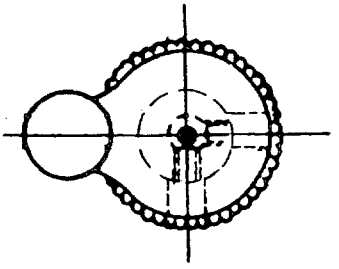

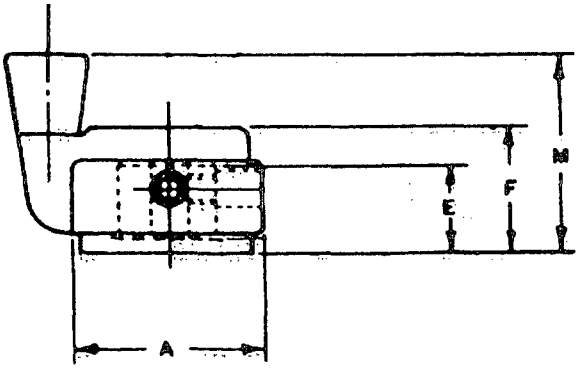

TABLE I. PART NUMBER AND DIMENSIONS

MS91528-SERIES	DIMENSIONS			
	A	E(MIN)	F	M
3	1.250	.600	1.040	1.520
4	1.750	.740	1.070	1.758
5	2.250	.740	1.095	1.782

STYLE: SC
SHAFT HOLE DIA: 2, 4
COLOR: B, G, R

SEE TABLES A, B, C.

KNOBS-CONTROL, PLASTIC (ROUND, CONCENTRIC, POINTER, SPINNER, SPINNER SLIP-CLUTCH, BAR, TACTILE, KNOB LOCK POINTER, SLIP-CLUTCH, AND KNOB LOCKS)

MIL-K-3926

ROUND CONCENTRIC KNOBS
ROUND CONCENTRIC RING SKIRT KNOBS

MS91528

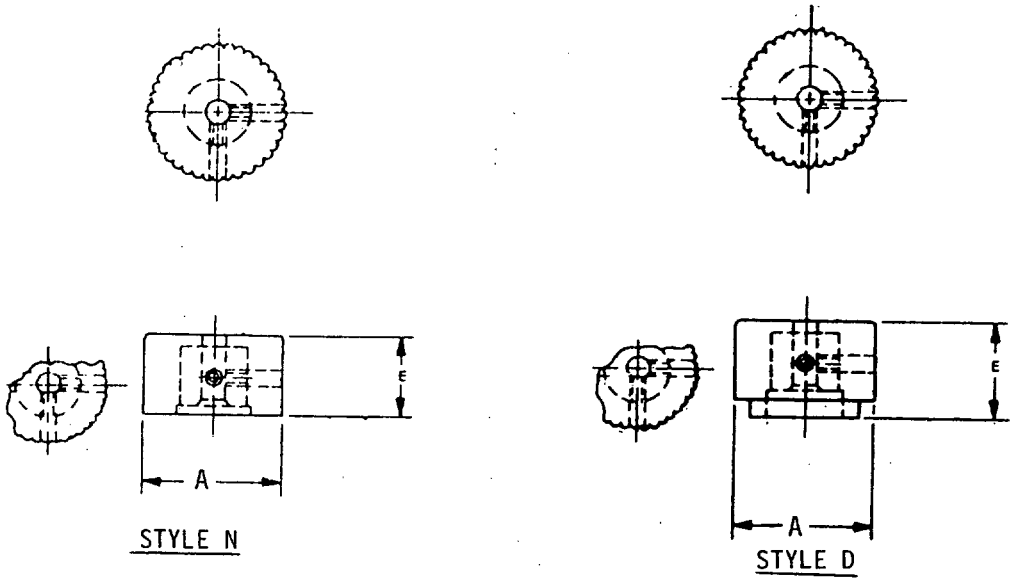

TABLE I. PART NUMBER AND DIMENSIONS

MS91528-SERIES STYLE		DIMENSIONS A	DIMENSIONS E
1	N	.700	.510
2	N	.900	.655
3	N	1.250	.530
1	D	.700	.690
2	D	.900	.885
3	D	1.250	.700

SHAFT HOLE DIA: 2, 4 SEE TABLES A, B, C.
COLOR: B, G, R
KNOB FORM: CONCENTRIC - C

357

KNOBS-CONTROL, PLASTIC (ROUND, CONCENTRIC, POINTER, SPINNER, SPINNER SLIP-CLUTCH, BAR, TACTILE, KNOB LOCK POINTER, SLIP-CLUTCH, AND KNOB LOCKS)

MIL-K-3926

ROUND CONCENTRIC DIAL SKIRT KNOBS

MS91528

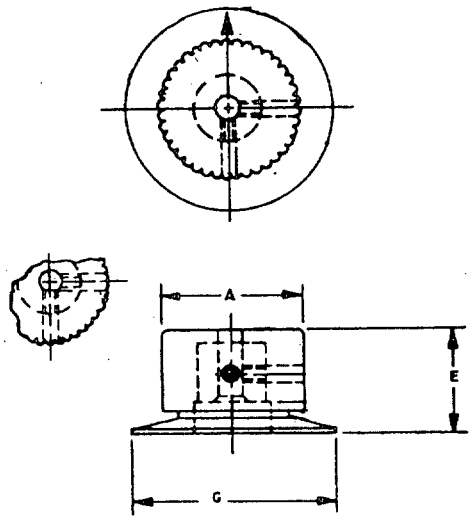

TABLE I. PART NUMBER AND DIMENSIONS

MS91528-SERIES	DIMENSIONS		
	A	E	G(MAX)
1	.700	.690	1.150
2	.900	.885	1.525
3	1.250	.700	1.837

STYLE: F, Q, O, OO
SHAFT HOLE DIA: 2, 4 SEE TABLES A, B, C.
COLOR: B, G, R
KNOB FORM: CONCENTRIC - C

KNOBS-CONTROL, PLASTIC (ROUND, CONCENTRIC, POINTER, SPINNER, SPINNER SLIP-CLUTCH, BAR, TACTILE, KNOB LOCK POINTER, SLIP-CLUTCH, AND KNOB LOCKS)

MIL-K-3926

ROUND BAR CONCENTRIC KNOBS
ROUND BAR CONCENTRIC RING SKIRT KNOBS

MS91528

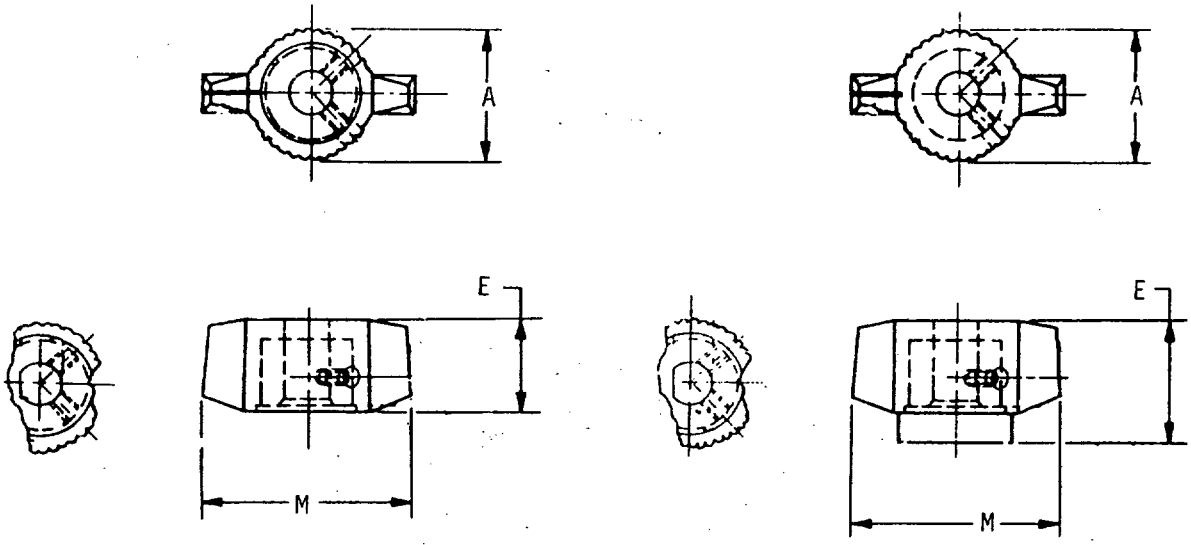

STYLES GG, JJ, SS

STYLES HH, KK, PP

TABLE I. PART NUMBER AND DIMENSIONS

MS91528-SERIES STYLE		DIMENSIONS		
		A	E	M
1	GG	.700	.510	1.150
1	JJ			
1	SS			
1	HH		.690	
1	KK			
1	PP			

SHAFT HOLE DIA: 2, 4 SEE TABLES A, B, C.
COLOR: B, G, R
KNOB FORM: CONCENTRIC - C

359

KNOBS-CONTROL, PLASTIC (ROUND, CONCENTRIC, POINTER, SPINNER, SPINNER SLIP-CLUTCH, BAR, TACTILE, KNOB LOCK POINTER, SLIP-CLUTCH, AND KNOB LOCKS)

MIL-K-3926

ROUND BAR CONCENTRIC DIAL SKIRT KNOBS

MS91528

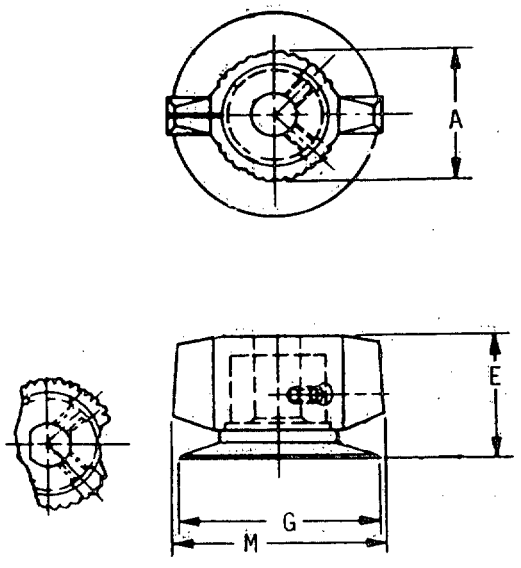

TABLE I. PART NUMBER AND DIMENSIONS

S91528-SERIES	DIMENSIONS		
	A	E	G & M (MAX)
1	.700	.690	1.150

STYLE: II, LL, VV
SHAFT HOLE DIA: 2, 4 SEE TABLES A, B, C.
COLOR: B, G, R
KNOB FORM: CONCENTRIC - C

KNOBS-CONTROL, PLASTIC (ROUND, CONCENTRIC, POINTER, SPINNER, SPINNER SLIP-CLUTCH, BAR, TACTILE, KNOB LOCK POINTER, SLIP-CLUTCH, AND KNOB LOCKS)

MIL-K-3926

POINTER TACTILE KNOBS
POINTER RING SKIRT TACTILE KNOBS

MS91528

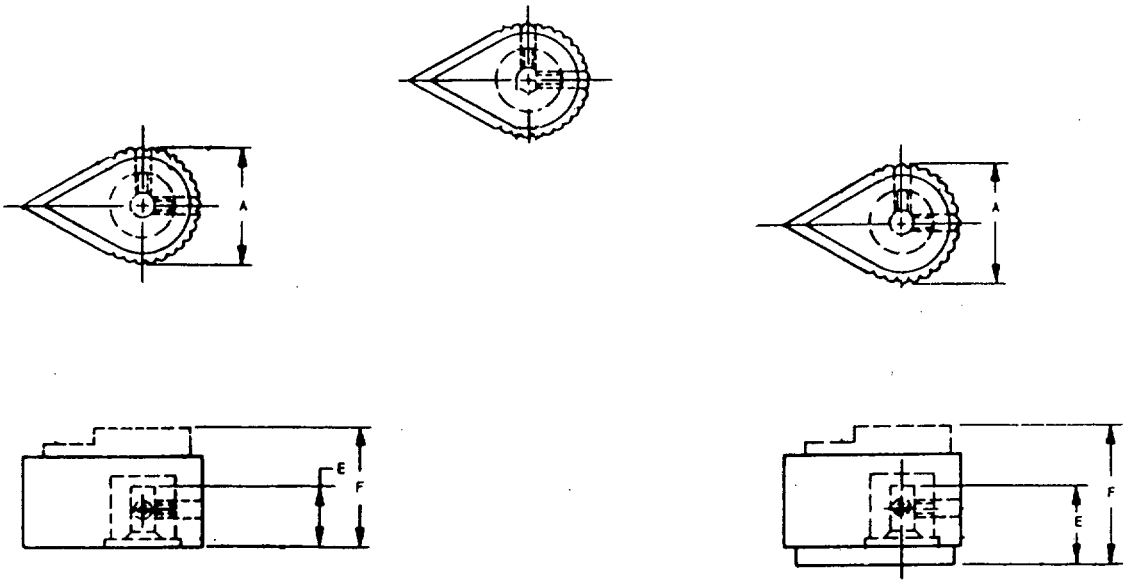

STYLE P

STYLE K

TABLE I. PART NUMBER AND DIMENSIONS

MS91528-SERIES	STYLE	DIMENSIONS A	E(MIN)	F
1	P	.700	.405	.900
2	P	.900	.520	1.155
1	K	.700	.568	1.075
2	K	.900	.730	1.375

SHAFT HOLE DIA: 1, 2, 3, 4
COLOR: B, G, R
TACTILE FORM: 7

SEE TABLES A, B, C, D.

361

KNOBS-CONTROL, PLASTIC (ROUND, CONCENTRIC, POINTER, SPINNER, SPINNER SLIP-CLUTCH, BAR, TACTILE, KNOB LOCK POINTER, SLIP-CLUTCH, AND KNOB LOCKS)

MIL-K-3926

SPINNER TACTILE KNOBS
POINTER RING SKIRT TACTILE KNOBS

MS91528

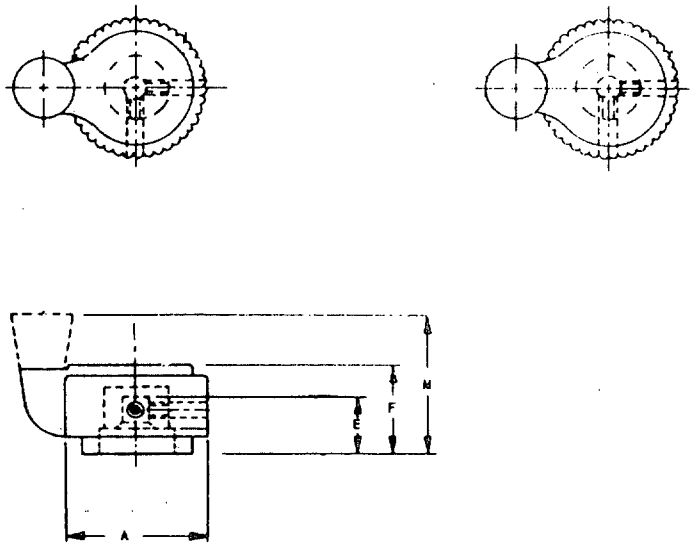

TABLE I. PART NUMBER AND DIMENSIONS

MS91528-SERIES	DIMENSIONS			
	A	E(MIN)	F	M
3	1.250	.605	.850	1.475
4	1.750	.740	1.070	1.940
5	2.250	.740	1.095	1.970

STYLE: S
SHAFT HOLE DIA: 2, 4
COLOR: B, G, R
TACTILE FORM: 8, 9

SEE TABLES A, B, C, D.

KNOBS-CONTROL, PLASTIC (ROUND, CONCENTRIC, POINTER, SPINNER, SPINNER SLIP-CLUTCH, BAR, TACTILE, KNOB LOCK POINTER, SLIP-CLUTCH, AND KNOB LOCKS)

MIL-K-3926

ROUND TACTILE KNOBS
ROUND RING SKIRT TACTILE KNOBS

MS91528

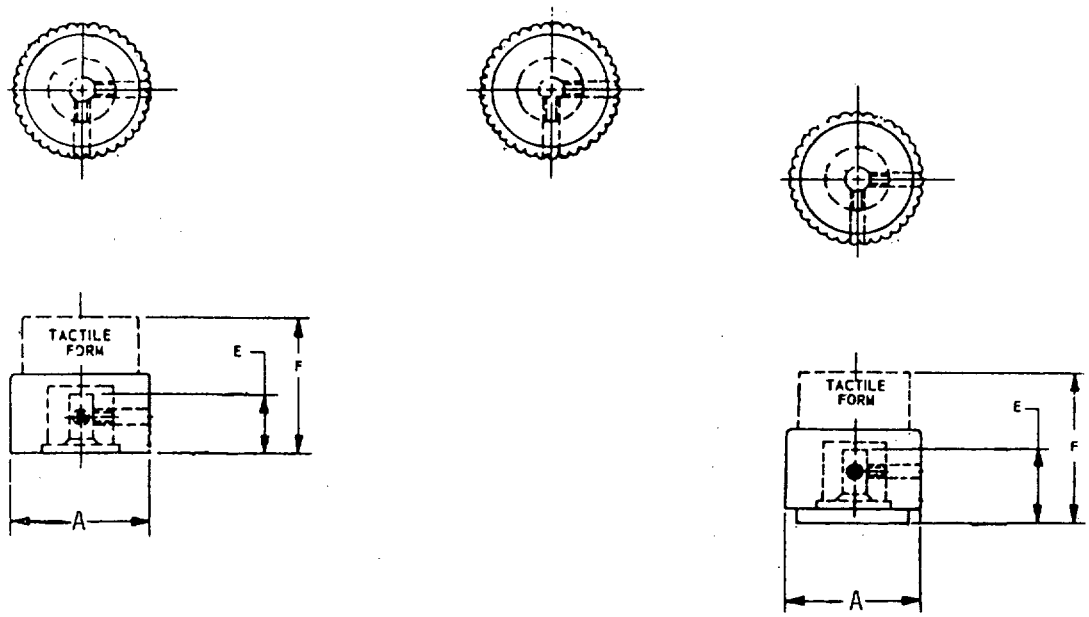

STYLE N

STYLE D

TABLE I. PART NUMBER AND DIMENSIONS

MS91528-SERIES	STYLE	DIMENSIONS A	E(MIN)	F
1	N	.700	.405	.906
2	N	.900	.520	1.156
3	N	1.250	.455	1.220
1	D	.700	.568	1.075
2	D	.900	.730	1.375
3	D	1.250	.605	1.375

SHAFT HOLE DIA: 1, 2, 3, 4
COLOR: B, G, R
TACTILE FORM: 1 THRU 6

SEE TABLES A, B, C, D.

KNOBS-CONTROL, PLASTIC (ROUND, CONCENTRIC, POINTER, SPINNER, SPINNER SLIP-CLUTCH, BAR, TACTILE, KNOB LOCK POINTER, SLIP-CLUTCH, AND KNOB LOCKS)

MIL-K-3926

ROUND DIAL SKIRT TACTILE KNOBS

MS91528

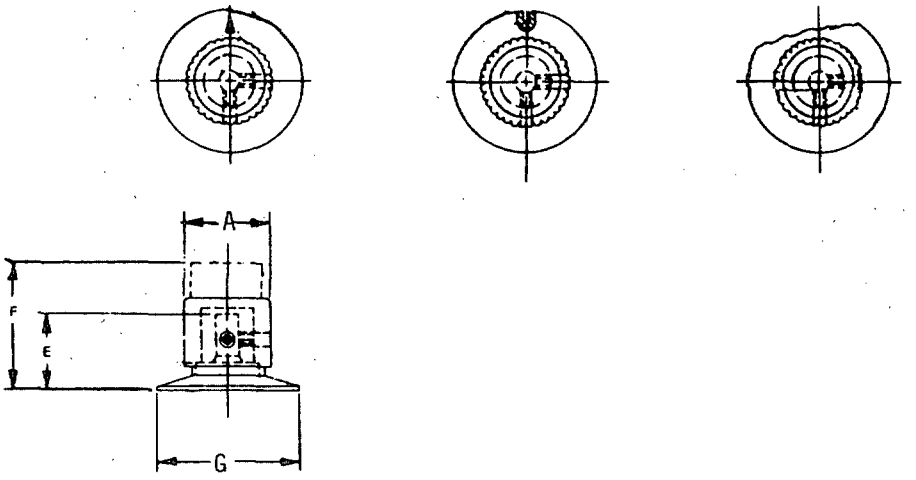

TABLE I. PART NUMBER AND DIMENSIONS

MS91528-SERIES	DIMENSIONS			
	A	E(MIN)	F	G(MAX)
1	.700	.568	1.075	1.150
2	.900	.730	1.375	1.525
3	1.250	.605	1.375	1.837

STYLE: F, G, H, O, Q, OO
SHAFT HOLE DIA: 1, 2, 3, 4 SEE TABLES A, B, C, D.
COLOR: B, G, R
TACTILE FORM: 1 THRU 6

KNOBS, CONTROL, SYMMETRICAL BAR, METAL

MIL-K-3926

MS91524

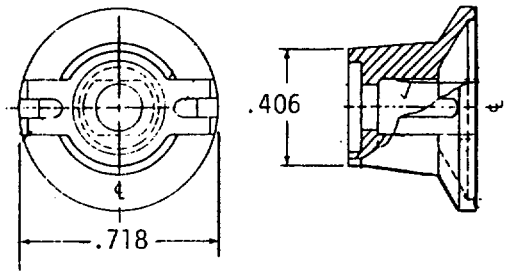

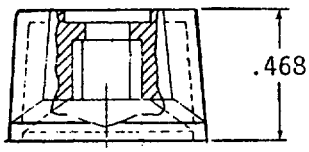

PART NUMBER EXAMPLE: MS91524-9AP3TOX

MS91524- 9 AP 3T O X

MILITARY STANDARD NUMBER

SERIES 9

STYLE
- AP ALUMINUM KNOB, PHOSPHORESCENT LINE
- AW ALUMINUM KNOB, WHITE LINE

BAR ANGLE
- 3 = 4
- T = 4

COLOR
- B BLACK
- G GRAY
- O OLIVE DRAB

GROOVES
- X BOTH BAR PARTS

365

KNOBS, CONTROL, BAR, METAL

MIL-K-3926

MS91525

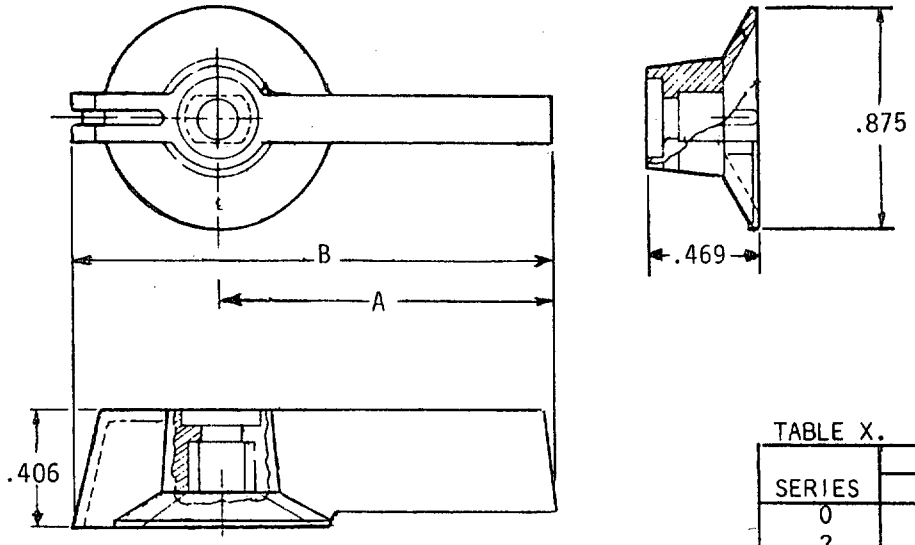

TABLE X. DIMENSIONS

SERIES	DIMENSIONS A	DIMENSIONS B
0	.594	1.188
2	.844	1.438
4	1.344	1.938
5	1.969	2.562

PART NUMBER EXAMPLE: MS91525-0AP3S0Z

MS91525- 0 AP 3S 0 Z

MILITARY STANDARD NUMBER

SERIES
0, 2, 4, 5

STYLE
AP ALUMINUM KNOB, PHOSPHORESCENT LINE
AW ALUMINUM KNOB, WHITE LINE

BAR ANGLE
3 = 4
S = 2

COLOR
B BLACK
G GRAY
O OLIVE DRAB

GROOVES
Z SHORT BAR PART ONLY

STANDARDIZATION DOCUMENT IMPROVEMENT PROPOSAL

(See Instructions – Reverse Side)

1. DOCUMENT NUMBER	2. DOCUMENT TITLE

3a. NAME OF SUBMITTING ORGANIZATION	4. TYPE OF ORGANIZATION *(Mark one)*
	☐ VENDOR
	☐ USER
b. ADDRESS *(Street, City, State, ZIP Code)*	☐ MANUFACTURER
	☐ OTHER *(Specify)*: _____

5. PROBLEM AREAS

a. Paragraph Number and Wording:

b. Recommended Wording:

c. Reason/Rationale for Recommendation:

6. REMARKS

7a. NAME OF SUBMITTER *(Last, First, MI)* – Optional	b. WORK TELEPHONE NUMBER *(Include Area Code)* – Optional
c. MAILING ADDRESS *(Street, City, State, ZIP Code)* – Optional	8. DATE OF SUBMISSION *(YYMMDD)*

DD FORM 82 MAR 1426 PREVIOUS EDITION IS OBSOLETE.

369

INSTRUCTIONS: In a continuing effort to make our standardization documents better, the DoD provides this form for use in submitting comments and suggestions for improvements. All users of military standardization documents are invited to provide suggestions. This form may be detached, folded along the lines indicated, taped along the loose edge *(DO NOT STAPLE)*, and mailed. In block 5, be as specific as possible about particular problem areas such as wording which required interpretation, was too rigid, restrictive, loose, ambiguous, or was incompatible, and give proposed wording changes which would alleviate the problems. Enter in block 6 any remarks not related to a specific paragraph of the document. If block 7 is filled out, an acknowledgement will be mailed to you within 30 days to let you know that your comments were received and are being considered.

NOTE: This form may not be used to request copies of documents, nor to request waivers, deviations, or clarification of specification requirements on current contracts. Comments submitted on this form do not constitute or imply authorization to waive any portion of the referenced document*(s)* or to amend contractual requirements.

(Fold along this line)

(Fold along this line)

DEPARTMENT OF THE NAVY
Naval Electronic Systems Command
Washington, DC 20363

NO POSTAGE NECESSARY IF MAILED IN THE UNITED STATES

OFFICIAL BUSINESS
PENALTY FOR PRIVATE USE $300

BUSINESS REPLY MAIL
FIRST CLASS PERMIT NO. 12503 WASHINGTON D. C.
POSTAGE WILL BE PAID BY THE DEPARTMENT OF THE NAVY

COMMANDER
NAVAL ELECTRONIC SYSTEMS COMMAND
DEFENSE STANDARDIZATION PROGRAM BRANCH
DEPARTMENT OF THE NAVY
WASHINGTON, DC 20363
ATTN: ELEX 8111