NOTICE OF CHANGE

INCH-POUND

MIL-STD-209J
NOTICE 1
28 January 2000

DEPARTMENT OF DEFENSE
INTERFACE STANDARD

LIFTING AND TIEDOWN PROVISIONS

TO ALL HOLDERS OF MIL-STD-209J:

1. THE FOLLOWING PAGES OF MIL-STD-209J HAVE BEEN REVISED AND SUPERSEDE THE PAGES LISTED:

NEW PAGE	DATE	SUPERSEDED PAGE	DATE
iv	28 Jan 00	iv	28 Jan 98
v	28 Jan 00	v	28 Jan 98
6	28 Jan 00	6	28 Jan 98
7	28 Jan 00	7	28 Jan 98
7a	28 Jan 00	New Page	
18	28 Jan 00	18	28 Jan 98
19	28 Jan 00	19	28 Jan 98
20	28 Jan 00	20	28 Jan 98
21	28 Jan 98	21	Reprinted without change
24	28 Jan 98	24	Reprinted without change
25	28 Jan 00	25	28 Jan 98

2. RETAIN THIS NOTICE AND INSERT BEFORE TABLE OF CONTENTS.

3. Holders or MIL-STD-209J will verify that page changes and additions indicated above have been entered. This notice page will be retained as a check sheet. This issuance, together with appended pages, is a separate publication. Each notice is to be retained by stocking points until the standard is completely revised or canceled.

AMSC N/A

FSC 2540

Custodians:
Army – MT
Air Force – 11

Preparing Activity:
Army - MT
(Project No. 2540-0459)

Reviewers:
Army - GL, SM, MI, CR4, CR, TE, AT, AR, AV
Navy - MC, SA
Air Force - 84, 99
DLA - CS

CONTENTS

SUPERSEDES PAGE iv OF MIL-STD-209J.

CONTENTS

SUPERSEDES PAGE v OF MIL-STD-209J.

adjacent lifting provisions is located outside a 120° cone having its apex at the CG and its axis of rotation about the vertical axis (fig 1).

b. The equipment is lifted with an equal length single apex sling assembly. The minimum length of sling leg used for lifting with an equal length single apex sling assembly is determined by setting each sling angle to 45° (referenced from the plane of the provisions). The point in space where the four equal length slings intersect determines the minimum length of the single apex sling assembly. If the length determined by this method is less than 12 feet, the sling length shall be set to 12 feet. In no case shall the length be less than 12 feet. The minimum sling length shall be used for testing (see 5.5). Appendix B gives an example of how to determine the minimum sling length and the required loads for testing.

c. The equipment lifts level or nearly level. A level lift is the preferred scenario.

d. The 1-inch clearance, as described in paragraph 4.1.2.1.a, exists when lifting with the minimum equal length sling legs (see 4.1.2.2.b), with sling angles ranging from a 45° single apex sling assembly to those same sling legs attached to an 8-foot by 20-foot container spreader bar (fig 2).

e. After the requirements of 4.1.2.2.a, 4.1.2.2.b, and 4.1.2.2.c are met, the overall height of the attached sling apex shall not exceed a height of 24 feet above the lowest extremity of the equipment when suspended (fig 3).

4.1.2.3 Equipment tiedown provisions. Tiedown provisions shall be located so that in the elevation view tiedown legs may be placed anywhere from vertically downward to horizontal and, in the plan view, 90° to either side of the principal direction of the tiedown provision (fig 4). The principal direction is parallel to the longitudinal axis. Tiedown provisions shall be located on structural members of the chassis of wheeled vehicles or the hull of tracked vehicles. Tiedown points on the equipment should be located symmetrically about the item of equipment, preferably mounted on the front and rear ends, and higher than the CG. Each tiedown provision shall be used for restraint in only one longitudinal direction, either fore or aft, and only one lateral direction, either left or right.

4.1.3 Option for type II equipment. If type II equipment is allowed by the equipment specification to not have lifting, equipment tiedown or multipurpose provisions, the contractor shall specify, to the materiel developer, points on the equipment to be used for lifting and tiedown. The selected points shall meet the requirements in sections 4 and 5 of this standard and shall require the approval of MTMCTEA or the appropriate service transportability agent. If holes are used as tiedown provisions, they shall be formed in the main structural members and shall conform to figure 5.

SUPERSEDES PAGE 6 OF MIL-STD-209J.

4.2 Surface of provisions. The material edges shall be rounded (1/8" radius to round cross-section) or chamfered (1/16" x 1/16" to 3/8" x 3/8"), and smoothed to prevent cutting or damage to the sling or tiedown devices. For tiedown provisions, the resulting cross section shall have maximum dimensions such that the cross section could be inscribed in a 2-inch diameter circle. This cross section shall be on the parts of the provisions that would be contacted by hooks pulling in the directions described in 4.1.2.3 and figure 4.

4.3 Shackles. Shackles shall not be used as lifting, equipment tiedown or multipurpose provisions unless they meet RR-C-271D, type IVA, class 3, grade B (alloy, bolt-pin, anchor shackle) and the nut is secured by welding. The resulting provision shall meet all requirements of this standard.

4.4 Hub and axle attachments. Wheel hubs and axles shall not be used as lifting or tiedown points.

4.5 Removable provisions. Provisions that can be removed are prohibited. A tiedown or lifting provision that doubles as another device, such as a towing provision, shall not be used if the secondary function requires removal of the provision. Figure 6 shows an example of a tiedown/towing provision that does not require removal of the provision.

4.6 Cargo tiedown provisions.

4.6.1 Number.

4.6.1.1 Cargo bed and flatbed/flatrack cargo tiedown provisions. The number of cargo tiedown provisions shall be determined by the design and size of the cargo compartment or platform; however, no cargo compartment or platform shall have fewer than four provisions.

4.6.1.2 Large cargo tiedown provisions. Equipment with a payload capability greater than 5,000 pounds shall be equipped with four large cargo tiedown provisions. Additional large cargo tiedown provisions may be added if required by the equipment specification. A large cargo tiedown provision can be used as a substitute for a cargo bed or flatbed/flatrack cargo tiedown provision if the large cargo tiedown provision can accept 2-inch steel banding and meet the dimensional requirements of a cargo bed or flatbed/flatrack cargo tiedown provision, whichever one is being substituted.

4.6.2 Location.

a. Cargo bed tiedown provisions are recessed inside the walls of cargo compartments. They fold to provide a flush surface when not in use. Spacing of

SUPERSEDES PAGE 7 OF MIL-STD-209J.

provisions shall be approximately 18 inches on center along each side and end of the cargo body of the vehicle, with spacing between provisions adjusted as necessary to avoid interference with vehicle structural members. Provisions on the side and end walls of cargo bodies shall be as close to the floor of the cargo body as practical. The center of each side and end tiedown provision shall be not more than 6 inches nor less than 4 inches from each of the four corners of the cargo bed/wall.

b. Flatbed/flatrack cargo tiedown provisions are located on the perimeter of the cargo bed so as not to increase the dimensions of the equipment. Spacing of provisions shall be approximately 18 inches on center along each side of the vehicle and at both ends of cargo bed, with spacing between provisions adjusted as necessary to avoid interference with vehicle structural members. The center of each side and end tiedown provision shall

NEW PAGE

0.187 inch, and other characters shall not be less than 0.093 inch in height. The data plate shall be attached by screws, bolts, or rivets in a conspicuous location.

5.6.2 Identification. The identification of lifting, tiedown, or multipurpose provisions used for transport shall be stenciled or marked with decals in appropriate locations on the exterior of the equipment in characters not less than 1 inch in height. Interior cargo tiedown provisions do not have to be marked. Accessories resembling provisions for lifting or tiedown shall be located or designed to avoid mistaken use and marked as unacceptable for lifting or tiedown.

SUPERSEDES PAGE 18 OF MIL-STD-209J.

6. **NOTES**

This section contains information of a general or explanatory nature that may be helpful, but is not mandatory.

6.1 Intended use. This standard covers the design and testing of slinging, tiedown, and cargo tiedown provisions.

6.2 Issue of DODISS. When this standard is used in acquisition, the issue of the DODISS applicable to the solicitation should be cited (para 2.1.1 and 2.1.2).

6.3 Associated Data Item Descriptions (DIDs). This standard is cited in DOD 5010.12-L, Acquisition Management Systems and Data Requirements Control List (AMSDL), as a source document for the following DID. When it is necessary to obtain the applicable data, this DID must be listed on the Contract Data Requirements List (DD Form 1423), except where DOD FAR Supplement exempts the requirement for a DD Form 1423.

Reference Paragraphs	DID Number	DID Title
5.5.2, 5.5.3, 5.5.5	DI-Pack-80880A	Transportability Report

The above DID was current as of the date of this standard. The current issue of the AMSDL must be researched to ensure that only current and approved DIDs are cited on the DD Form 1423.

6.4 Tiedown system. If a proposed rail tiedown procedure differs from that represented in MTMCTEA Pamphlet 55-19, Tiedown Handbook for Rail Movements, the materiel developer should obtain MTMCTEA concurrence prior to testing. Items that require more than four chains for rail tiedown will be tested with more than one chain at each tiedown provision, but all chains to each provision will act in the same general direction, usually out, away from the item.

6.5 Subject term (keyword) listing:

Cables and chains, sling
Cables and chains, tiedown
Crane lifting
Eyes, lifting
Eyes, tiedown
Helicopter EAT
Provision, cargo tiedown
Provision, multipurpose
Provision, lifting
Pull test
Spreader bars
Static lift test

SUPERSEDES PAGE 19 OF MIL-STD-209J.

6.6 International interest. Certain provisions of this standard are the subject of international standardization agreements (QSTAG-328, ASCC Air Standard 44/21, STANAG-4062, and STANAG-3548). When an amendment, a revision, or a cancellation of this standard is proposed that will modify the international agreement concerned, the preparing activity will take appropriate action through international standardization channels, including departmental standardization offices, to change the agreement or make other appropriate accommodations.

6.7 Changes from previous issue. Marginal notations are not used in this revision to identify changes with respect to the previous issue because of the extensiveness of the changes.

6.8 Tailoring. This standard requires very little tailoring, but a few items should be decided and stated in the paragraph referring to MIL-STD-209 in the solicitation. These items are as follows:

a. Determine and state the equipment type defined in 1.3.2.

b. Specify whether or not the option in 4.1.3 is to be used.

c. Specify if helicopter EAT is required (see 5.1.1.1).

If it is known that an item cannot meet a requirement of MIL-STD-209J, contact MTMCTEA for assistance with tailoring your solicitation.

SUPERSEDES PAGE 20 OF MIL-STD-209J.

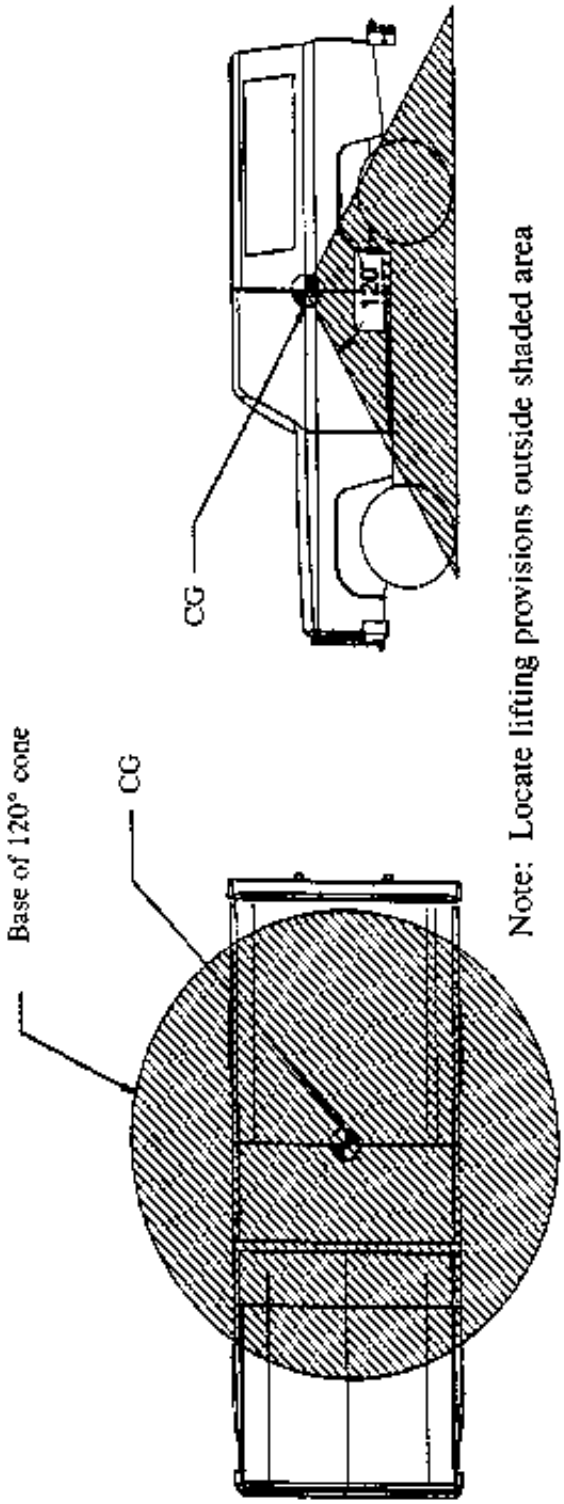

Note: Locate lifting provisions outside shaded area

FIGURE 1. **Location of lifting provisions.**

REPRINTED WITHOUT CHANGE.

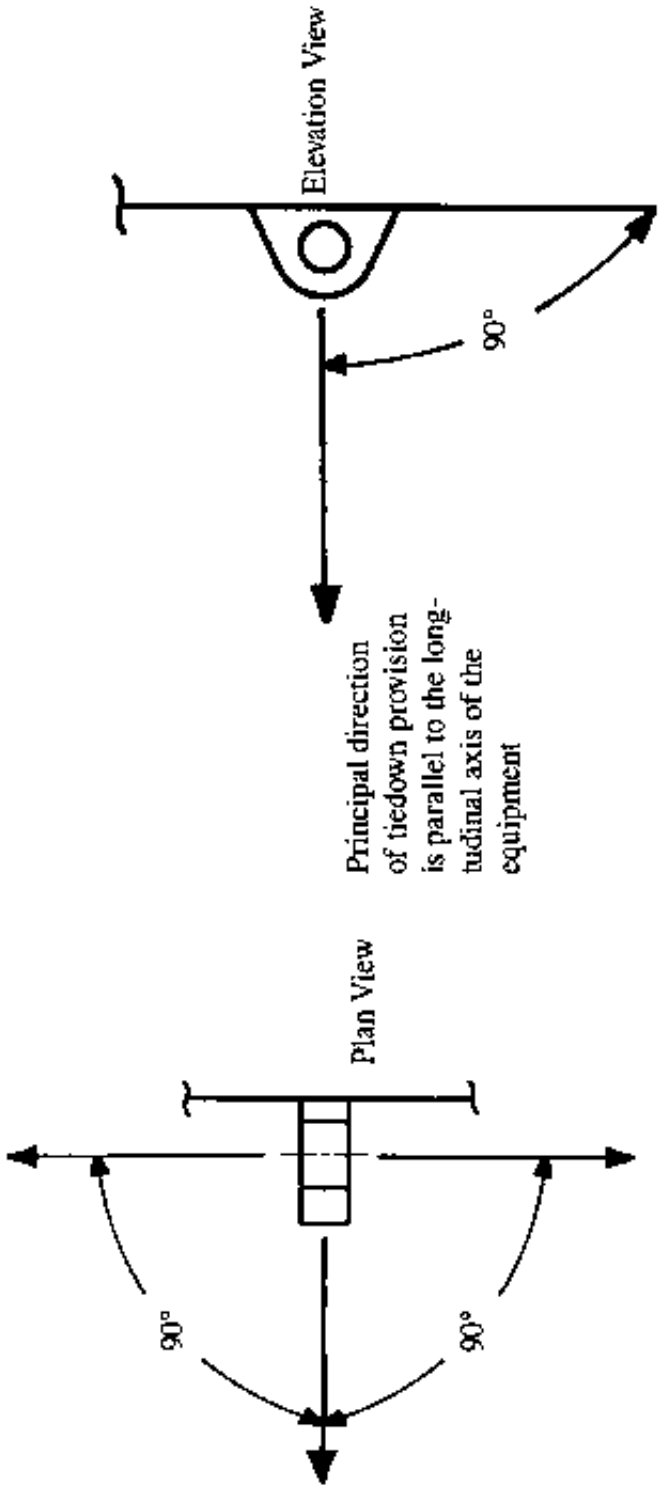

FIGURE 4. **Working angles for equipment tiedown provisions.**

REPRINTED WITHOUT CHANGE.

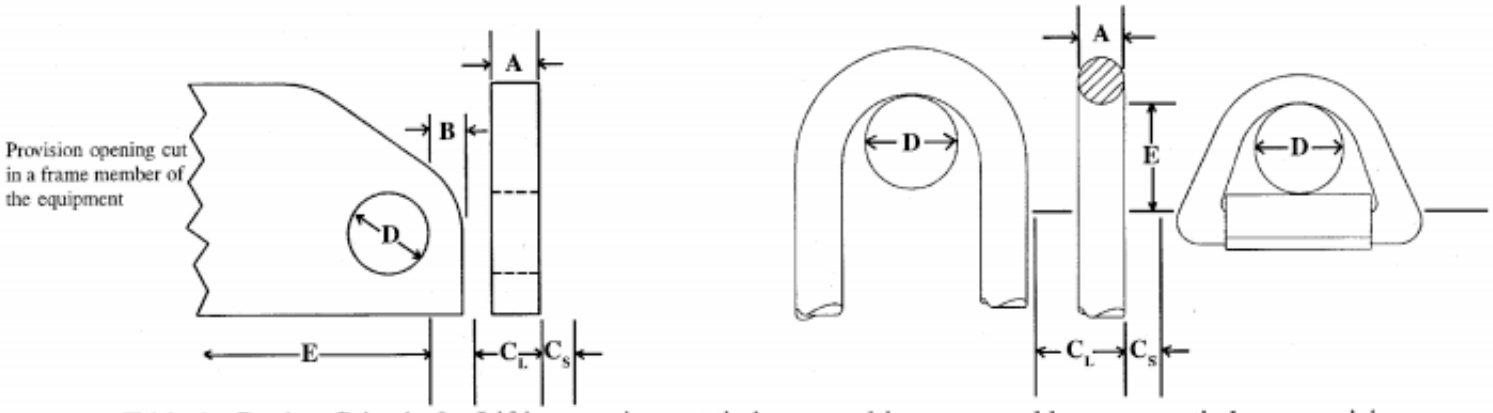

Table 1 - Design Criteria for Lifting, equipment tiedown, multipurpose and large cargo tiedown provisions.

Weight Range of equipment		Amax		Bmax		C_L min		C_S min		Dmax		Dmin		Emin	
LB	KG	in.	mm	in.	mm	in.	mm	in.	mm	in.	mm	in.	mm	in.	mm
0 to 11,200	0 to 5,080	1	25	1	25	7	178	3	76	3.2	81	3	76	3	76
>11,200 to 22,400	>5,080 to 10,160	1.5	38	1.125	29	9	229	4	102	3.5	89	3	76	3	76
>22,400 to 49,280	>10,160 to 22,353	1.75	44	1.5	38	12	305	5	127	3.5	89	3	76	3.5	89
>49,280 to 100,800	>22,353 to 45,722	1.75	44	1.5	38	16	406	7	179	5.3	135	4.9	124	5	127
>100,800	>66,043	1.75	44	1.75	44	20	508	8	203	5.3	135	4.9	124	5.5	139

Note 1 - There shall be no interference or obstruction within the dimensions C_L and C_S that could interfere with engaging a shackle and pin in the provision. Either side of the provision may be used as the datum from which to measure C_L and C_S.

Note 2 - Provisions may be designed to swivel or rotate. When provisions are designed to swivel or rotate, dimension Dmin shall be met throughout the full range of motion.

FIGURE 5. **Lifting, equipment tiedown, multipurpose and large cargo tiedown provision openings and clearance dimensions.**