Downloaded from http://www.everyspec.com

METRIC

MIL-STD-188-125-1
17 July 1998
SUPERSEDING
MIL-STD-188-125A
15 February 1994

DEPARTMENT OF DEFENSE INTERFACE STANDARD

HIGH-ALTITUDE ELECTROMAGNETIC PULSE (HEMP) PROTECTION FOR GROUND-BASED C^4I FACILITIES PERFORMING CRITICAL, TIME-URGENT MISSIONS

PART 1
FIXED FACILITIES

AMSC N/A

AREA TCSS

DISTRIBUTION STATEMENT A. Approved for public release; distribution is unlimited.

Downloaded from http://www.everyspec.com

HIGH-ALTITUDE ELECTROMAGNETIC PULSE (HEMP) PROTECTION FOR FIXED GROUND-BASED C^4I FACILITIES PERFORMING CRITICAL, TIME-URGENT MISSIONS

F O R E W O R D

1. This military standard is approved for use by all Departments and Agencies of the Department of Defense (DoD).

2. Originally, Military Standard 188 (MIL-STD-188) covered technical standards for tactical and long-haul communications, but later evolved through revisions (MIL-STD-188A, MIL-STD-188B) into a document applicable to tactical communications only (MIL-STD-188C).

3. The Defense Information Systems Agency (DISA) published DISA circulars (DISAC) promulgating standards and engineering criteria applicable to the long-haul Defense Communication System and to the technical support of the National Military Command System.

4. As a result of a Joint Chiefs of Staff action, standards for all military communications are now being published in a MIL-STD-188 series of documents. The MIL-STD-188 series is subdivided into a MIL-STD-188-100 series, covering common standards for tactical and long-haul communications; a MIL-STD-188-200 series, covering standards for tactical communications only; and a MIL-STD-188-300 series, covering standards for long-haul communications only. Emphasis is being placed on developing common standards for tactical and long-haul communications published in the MIL-STD-188-100 series.

5. This two-part document contains technical requirements and design objectives for high-altitude electromagnetic pulse (HEMP) protection of ground-based systems and facilities that are nodes in HEMP-hardened networks for performing critical and time-urgent command, control, communications, computer, and intelligence (C^4I) missions. This part 1 of the document addresses HEMP hardening for fixed facilities; Part 2 addresses transportable systems. The requirements are stringent, in order to avoid both damage and functional upsets that prevent mission accomplishment within operationally prescribed timelines. The standards apply uniformly to all systems and facilities in the end-to-end chain, since disruption of a single node may result in network failure.

6. Use of the standard for HEMP protection of other fixed ground-based communications-electronics facilities that require HEMP hardening is encouraged to the extent permitted by cost constraints.

Downloaded from http://www.everyspec.com

7. Performance, acceptance test, and verification test requirements are contained in the body of the standard. HEMP-unique acceptance and verification test techniques are provided in Appendices A, B, and C.

8. Implementation of MIL-STD-188-125-1 is supported by MIL-HDBK-423, "High-Altitude Electromagnetic Pulse (HEMP) Protection for Fixed and Transportable Ground-Based Facilities, Volume I: Fixed Facilities." The handbook also includes HEMP program planning, management, logistics, and data requirements for critical, time-urgent, fixed ground-based facilities.

9. Beneficial comments (recommendations, additions, deletions) and any pertinent data which may be of use in improving this document should be addressed to: Defense Special Weapons Agency/ESE, 6801 Telegraph Road, Alexandria, VA 22310-3398, by using the Standardization Document Improvement Proposal (DD Form 1426) appearing at the end of this document or by letter.

Downloaded from http://www.everyspec.com

C O N T E N T S

PARAGRAPH		PAGE
	FOREWORD	ii
1.	**SCOPE**	1
1.1	Purpose	1
1.2	Scope	1
1.3	Applications	1
1.4	Objectives	1
2.	**APPLICABLE DOCUMENTS**	2
2.1	General	2
2.2	Government documents	2
2.2.1	Specifications, standards, and handbooks	2
2.2.2	Other Government documents, drawings, and publications	3
2.3	Non-Government publications	3
2.4	Order of precedence	4
3.	**DEFINITIONS**	5
3.1	Acronyms used in this standard	5
3.2	Sources for definitions	7
3.3	Definitions	8
3.3.1	Aperture point-of-entry (POE)	8
3.3.2	Conductive POE	8
3.3.3	Continuous wave (CW) immersion	8
3.3.4	Corrective maintenance	8
3.3.5	Electromagnetic barrier	8
3.3.6	Electromagnetic closure	8
3.3.7	Electromagnetic stress	8
3.3.8	Facility HEMP shield	8
3.3.9	HEMP acceptance test	9
3.3.10	HEMP hardness	9
3.3.11	HEMP hardness assurance	9
3.3.12	HEMP hardness configuration baseline	9
3.3.13	HEMP hardness critical item (HCI)	9
3.3.14	HEMP hardness critical process (HCP)	9
3.3.15	HEMP hardness maintenance (HM)	9
3.3.16	HEMP hardness maintenance and hardness surveillance (HM/HS)	9
3.1.17	HEMP protection subsystem	10
3.3.18	HEMP hardness surveillance (HS).	10
3.3.19	HEMP hardness surveillance/reverification testing	10
3.3.20	Low-risk HEMP hardening	10

Downloaded from http://www.everyspec.com

C O N T E N T S

PARAGRAPH		PAGE
3.3.21	Main barrier electrical POE protective device	10
3.3.22	Mission-critical systems (MCS)	10
3.3.23	Norton equivalent circuit or Norton source	10
3.3.24	Penetrating conductor	10
3.3.25	Penetration entry area	11
3.3.26	Performance degradation	11
3.3.27	Point-of-entry (POE)	11
3.3.28	POE protective device or POE treatment	11
3.3.29	Preventive maintenance	11
3.3.30	Primary special electrical POE protective device	11
3.3.31	Protected volume	11
3.3.32	Pulsed current injection (PCI)	11
3.3.33	Residual internal stress	11
3.3.34	Retrofit HEMP hardening	12
3.3.35	Secondary special electrical POE protective device	12
3.3.36	Shielded enclosure leak detection system (SELDS)	12
3.3.37	Special protective measures	12
3.3.38	Special protective volume	12
3.3.39	Verification testing	12
3.3.40	Vulnerability threshold (of an equipment)	12
3.3.41	Waveguide below cutoff (WBC)	12
3.3.42	Waveguide-below-cutoff array	13
4.	**GENERAL REQUIREMENTS**	14
4.1	General	14
4.1.1	HEMP protection overview	14
4.1.2	Integration with related requirements	14
4.2	Hardness program overview	14
4.3	HEMP hardening design	15
4.3.1	Facility shield	15
4.3.2	POEs	15
4.3.3	MCS	15
4.3.3.1	MCS within the electromagnetic barrier.	15
4.3.3.2	MCS outside the electromagnetic barrier	15
4.3.3.3	HEMP-hardened electrical power	16
4.3.4	Special protective measures	16
4.4	HEMP testing	16
4.4.1	Quality assurance program	16
4.4.2	Acceptance testing	16
4.4.3	Verification testing	17

Downloaded from http://www.everyspec.com

C O N T E N T S

PARAGRAPH		PAGE
4.5	HM/HS	17
4.5.1	HM/HS program development	17
4.5.2	HM/HS program implementation	17
5.	**DETAILED REQUIREMENTS**	18
5.1	HEMP protection subsystem topology	18
5.1.1	Electromagnetic barrier topology	18
5.1.2	Penetration entry area	18
5.2	Facility grounding	18
5.2.1	Equipotential ground plane	18
5.2.2	Grounding to the facility HEMP shield	18
5.3	Facility HEMP shield	19
5.3.1	Shielding effectiveness	19
5.3.2	Shield configuration	19
5.3.3	Shield monitoring capability	19
5.3.4	Shield construction quality assurance	19
5.3.5	Shield acceptance testing	19
5.3.5.1	Facility shield modifications	19
5.4	Architectural POEs	19
5.4.1	HEMP protection for architectural POEs	19
5.4.2	Personnel entryways and exits	19
5.4.2.1	Waveguide entryway dimensions	22
5.4.2.2	Entryway shield	22
5.4.2.3	Entryway shielded doors	22
5.4.2.4	Entryway interlocks and alarms	22
5.4.3	Equipment accesses	22
5.4.4	Acceptance testing for architectural POE protective devices	22
5.5	Mechanical POEs	23
5.5.1	HEMP protection for mechanical POEs	23
5.5.2	Piping POEs	23
5.5.3	Ventilation POEs	23
5.5.4	Acceptance testing for mechanical POE protective devices	23
5.6	Structural POEs	23
5.6.1	HEMP protection for structural POEs	23
5.6.2	Acceptance testing for structural POE protective treatments	25
5.7	Electrical POEs	25
5.7.1	HEMP protection for electrical POEs	25
5.7.2	Commercial electric power feeder POEs	26
5.7.2.1	Commercial power main barrier POE protective device requirements	26
5.7.3	Other electrical power feeder POEs	31

Downloaded from http://www.everyspec.com

C O N T E N T S

PARAGRAPH		PAGE
5.7.3.1	Electrical power main barrier POE protective device requirements for unrestricted lines	31
5.7.3.2	Electrical power main barrier POE protective device requirements for restricted lines	32
5.7.4	Audio and data line POEs	32
5.7.4.1	Standard audio and data lines	32
5.7.4.2	Nonstandard audio and data lines	32
5.7.4.2.1	Nonstandard audio and data main barrier POE protective device requirements	33
5.7.5	Electrical control and signal line POEs.	33
5.7.5.1	Main barrier POE protective device requirements for unrestricted control and signal lines operating at voltages less than 90 V	33
5.7.5.2	Main barrier POE protective device requirements for unrestricted control and signal lines operating at voltages greater than 90 V	33
5.7.5.3	Main barrier POE protective device requirements for restricted control and signal lines	34
5.7.6	RF communications antenna line POEs.	34
5.7.6.1	Antenna line POE protective device requirements.	34
5.7.6.1.1	Signal conductor injection for receive-only antennas	34
5.7.6.1.2	Signal conductor injection for transmit antennas	35
5.7.6.1.3	Shield injection	35
5.7.7	Conduit shielding	35
5.7.7.1	HEMP protection using conduit shielding	35
5.7.7.2	Conduit requirements	36
5.7.8	Acceptance testing of main barrier electrical POE protective devices	37
5.8	Special protective measures	37
5.8.1	MCS outside the main electromagnetic barrier	37
5.8.1.1	RF communications antennas outside the main electromagnetic barrier	37
5.8.2	MCS inside the main electromagnetic barrier	38
5.8.3	Special protective volumes	38
5.8.3.1	Special protective volumes for piping POEs	38
5.8.3.1.1	Special waveguide requirements	38
5.8.3.1.2	Special protective barriers for piping POEs	38
5.8.3.2	Special protective volumes for electrical POEs	38
5.8.3.2.1	Special protective barriers for electrical POEs	40
5.8.3.2.2	Primary special electrical POE protective device requirements	40
5.8.3.2.3	Secondary special electrical POE protective device requirements	40
5.8.3.2.4	MCS in a special protective volume	40
5.8.4	Acceptance testing for special protective measures	40
5.8.4.1	Special protective measures for MCS	40

Downloaded from http://www.everyspec.com

C O N T E N T S

PARAGRAPH		PAGE
5.8.4.2	Special protective barriers	41
5.9	Reliability and maintainability	41
5.10	Safety and human engineering	41
5.11	Testability	41
5.12	Corrosion control	41
5.13	Configuration management	42
5.14	Verification testing	42
5.14.1	CW immersion testing	42
5.14.2	PCI verification testing	42
5.14.3	Verification for special protective measures	43
5.14.3.1	Verification of special protective measures for MCS	43
5.14.3.2	Verification of special protective barriers	43
5.15	HM/HS program requirements	44
5.15.1	HS/reverification test procedures	44
5.15.2	Maintenance and inspection procedures	44
5.15.3	Supply support requirements	44
5.15.4	Training requirements	44
5.15.5	Technical data	44
5.15.6	Delivery	45
5.15.7	Implementation	45
6.	**NOTES**	46
6.1	Intended use	46
6.2	Issues of DoDISS	46
6.3	Subject term (key word) listing	46
6.4	Changes from previous issue	46

FIGURE

1	Minimum HEMP shielding effectiveness requirements (measured IAW procedures of Appendix A)	20
2	Typical waveguide and vestibule entryways	21
3	Typical waveguide-below-cutoff piping POE protective devices	24
4	Typical waveguide-below-cutoff array ventilation POE protective device	25
5	Typical electrical POE protective device	27
6	Typical special protective volumes	39

Downloaded from http://www.everyspec.com

C O N T E N T S

TABLE

I Injected pulse characteristics and residual internal stress limits for classes of electrical POEs 28
II Maximum conduit length as a function of conduit outside diameter (OD) 36

APPENDIX

A SHIELDING EFFECTIVENESS (SE) TEST PROCEDURES 48

B PULSED CURRENT INJECTION (PCI) TEST PROCEDURES 60

C CONTINUOUS WAVE (CW) IMMERSION TEST PROCEDURES . . 82

CONCLUDING MATERIAL 97

Downloaded from http://www.everyspec.com

1. SCOPE

1.1 Purpose. This standard establishes minimum requirements and design objectives for high-altitude electromagnetic pulse (HEMP) hardening of fixed[1] ground-based facilities that perform critical, time-urgent command, control, communications, computer, and intelligence (C^4I) missions. Facilities required to fully comply with the provisions of the standard will be designated by the Joint Chiefs of Staff, a Military Department Headquarters, or a Major Command.

1.2 Scope. This standard prescribes minimum performance requirements for low-risk protection from mission-aborting damage or upset due to HEMP threat environments defined in MIL-STD-2169. This standard also addresses minimum testing requirements for demonstrating that prescribed performance has been achieved and for verifying that the installed protection subsystem provides the operationally required hardness for the completed facility. If the prescribed testing results in any hardware damage or functional upsets, the operational authority for the facility will make the determination whether the observed event is mission aborting.

1.3 Applications. This standard defines the design and testing criteria for specifically designated fixed ground-based facilities in HEMP-hardened, critical, time-urgent C^4I networks. Such nodes include subscriber terminals and data processing centers, transmitting and receiving communications stations, and relay facilities. The standard applies to both new construction and retrofit of existing facilities. Although only local portions of facility interconnects are addressed, it is assumed that survivable long-haul communications paths, fiber optic links, or other hardened interconnects between facilities will be provided as required for mission accomplishment. Use of the standard for HEMP protection of other ground-based communications-electronics facilities that require HEMP hardening is also encouraged.

1.4 Objectives. Survivable C^4I capabilities are essential to a credible military deterrent. This standard supports nuclear survivability objectives by providing a standardized, low-risk protection approach for fixed ground-based facilities in HEMP-hardened C^4I networks. These uniform requirements ensure balanced HEMP hardening for all critical facilities in the network.

---

[1]This part of the standard addresses fixed facilities only. A fixed ground-based facility, for purposes of this standard, consists of equipment in a permanent building or shelter that provides survivable C^4I capabilities at a fixed geographical location. HEMP hardening measures for transportable systems are contained in MIL-STD-188-125-2.

Downloaded from http://www.everyspec.com

2. APPLICABLE DOCUMENTS

2.1 General. The documents listed in this section are specified in sections 3, 4, and 5 of this standard. This section does not include documents cited in other sections of this standard or recommended for additional information or as examples. While every effort has been made to ensure the completeness of this list, document users are cautioned that they must meet all specified requirements documents cited in sections 3, 4, and 5 of this standard, whether or not they are listed.

2.2 Government documents.

2.2.1 Specifications, standards, and handbooks. The following specifications, standards, and handbooks form a part of this document to the extent specified herein. Unless otherwise specified, the issues of these documents are those listed in the effective issue of the Department of Defense Index of Specifications and Standards (DoDISS) and supplement thereto (see 6.2).

STANDARDS

FEDERAL

FED-STD-1037 – Glossary of Telecommunication Terms

DEPARTMENT OF DEFENSE

MIL-STD-100 – Engineering Drawing Practices
MIL-STD-2169 – High-Altitude Electromagnetic Pulse (HEMP) Environment (U) (document is classified Secret)

HANDBOOKS

DEPARTMENT OF DEFENSE

MIL-HDBK-419 – Grounding, Bonding, and Shielding for Electronic Equipment and Facilities
MIL-HDBK-423 – High-Altitude Electromagnetic Pulse (HEMP) Protection for Fixed and Transportable Ground-Based Facilities, Volume I: Fixed Facilities

(Unless otherwise indicated, copies of the above specifications, standards, and handbooks are available from the Standardization Document Order Desk, 700 Robbins Avenue, Building 4D, Philadelphia, PA 19111-5094. Requests for MIL-STD-2169 should indicate that the

Downloaded from http://www.everyspec.com

document is classified, and contractor requests require endorsement by the DoD contracting activity.)

2.2.2 Other Government documents, drawings, and publications. The following other Government documents, drawings, and publications form a part of this standard to the extent specified herein. Unless otherwise specified, the issues are those cited in the solicitation.

PUBLICATIONS

JOINT PUB 1-02 – Department of Defense Dictionary of Military and Associated Terms

FORMS

DD Form 2639 – Hardness Critical Label

DD Form 2640 – Hardness Critical Tag

(Copies of publications and forms required by contractors in connection with specific acquisition functions should be obtained from the contracting activity or as directed by the contracting officer.)

2.3 Non-Government publications. The following documents form a part of this document to the extent specified herein. Unless otherwise specified, the issues of the documents which are Department of Defense (DoD) adopted are those listed in the issue of the DoDISS cited in the solicitation. The issues of documents not listed in the DoDISS are the issues of the documents cited in the solicitation (see 6.2).

ANSI C63.14 – American National Standard Dictionary for Technologies of Electromagnetic Compatibility (EMC), Electromagnetic Pulse (EMP), and Electrostatic Discharge (ESD)

(Applications for copies should be addressed to the Institute for Electrical and Electronics Engineers [IEEE], 445 Hoes Lane, Post office Box 1331, Piscataway NJ 08855-1331.)

NEPA 101 – Life Safety Code

(Applications for copies should be addressed to the National Fire Protection Association [NFPA], Batterymarch Park, Quincy, MA 02269.)

Downloaded from http://www.everyspec.com

2.4 Order of precedence. In the event of a conflict between the text of this document and the references cited herein, the text of this document takes precedence. Nothing in this document, however, supersedes applicable laws and regulations unless a specific exemption has been obtained.

Downloaded from http://www.everyspec.com

3. DEFINITIONS

3.1 Acronyms used in this standard. The acronyms used in this standard are defined as follows:

a. A – Ampere

b. ac – Alternating Current

c. C^4I – Command, Control, Communications, Computer, and Intelligence

d. cm – Centimeter

e. CW – Continuous Wave

f. dB – Decibel

g. dBm – Power in dB referred to one milliwatt

h. dc – Direct Current

i. DoD – Department of Defense

j. DoDISS – Department of Defense Index of Specifications and Standards

k. DR – Dynamic Range

l. EMP – Electromagnetic Pulse

m. ESA – Electric Surge Arrester

n. $FGBC^4I$ – Fixed Ground-Based C^4I

o. F/O – Fiber Optics

p. ft – Foot

q. FWHM – Full-Width at Half-Maximum Amplitude

r. GHz – Gigahertz

s. GPIB – General Purpose Interface Bus

Downloaded from http://www.everyspec.com

t.	HCI	–	Hardness Critical Item
u.	HCP	–	Hardness Critical Process
v.	HEMP	–	High-Altitude Electromagnetic Pulse
w.	HM	–	Hardness Maintenance
x.	HM/HS	–	Hardness Maintenance and Hardness Surveillance
y.	HS	–	Hardness Surveillance
z.	Hz	–	Hertz
aa.	IAW	–	In Accordance With
bb.	IEEE	–	Institute of Electrical and Electronics Engineers
cc.	in	–	Inch
dd.	kA	–	Kiloampere
ee.	kHz	–	Kilohertz
ff.	m	–	Meter
gg.	mA	–	Milliampere
hh.	MCS	–	Mission-Critical Systems
ii.	MHz	–	Megahertz
jj.	MR	–	Measurement Range
kk.	ms	–	Millisecond
ll.	NFPA	–	National Fire Protection Association
mm.	ns	–	Nanosecond
nn.	OD	–	Outside Diameter
oo.	PCI	–	Pulsed Current Injection

Downloaded from http://www.everyspec.com

pp. POE – Point-of-Entry

qq. RF – Radio Frequency

rr. s – Second

ss. SE – Shielding Effectiveness

tt. SE_M – Shielding Effectiveness (Magnetic Field)

uu. SE_{PW} – Shielding Effectiveness (Plane Wave)

vv. SE_R – Shielding Effectiveness (Resonant Range)

ww. SELDS – Shielded Enclosure Leak Detection System

xx. TEMPEST – A term used to describe a methodology for controlling radiated and conducted emanations of classified information

yy. V – Volt

zz. WBC – Waveguide Below Cutoff

aaa. µs – Microsecond

bbb. Ω – Ohm

3.2 Sources for definitions. Sources for definitions of terms used in this standard, in order of decreasing priority, are as follows:

a. FED-STD-1037, "Glossary of Telecommunication Terms"

b. JOINT PUB 1-02, "Department of Defense Dictionary of Military and Associated Terms"

c. MIL-HDBK-423, "High-Altitude Electromagnetic Pulse (HEMP) Protection for Fixed and Transportable Ground-Based Facilities, Volume I: Fixed Facilities"

d. ANSI C63.14, "American National Standard Dictionary for Technologies of Electromagnetic Compatibility (EMC), Electromagnetic Pulse (EMP), and Electrostatic Discharge (ESD)"

Downloaded from http://www.everyspec.com

e. MIL-HDBK-419, "Grounding, Bonding, and Shielding for Electronic Equipment and Facilities"

f. MIL-STD-100, "Engineering Drawing Practices"

3.3 Definitions.

3.3.1 Aperture point-of-entry (POE). An intentional or inadvertent hole, crack, opening, or other discontinuity in the HEMP shield surface. Intentional aperture POEs are provided for personnel and equipment entry and egress and for fluid flow (ventilation and piped utilities) through the electromagnetic barrier.

3.3.2 Conductive POE. An electrical wire or cable or other conductive object, such as a metal rod, that passes through the electromagnetic barrier. Conductive POEs are also called penetrating conductors.

3.3.3 Continuous wave (CW) immersion. A test method for measuring the electromagnetic responses induced on an electromagnetic barrier and other items of interest (e.g., cables or conduits) illuminated by a CW electric or magnetic field.

3.3.4 Corrective maintenance. All unscheduled maintenance actions. HEMP corrective maintenance action is undertaken when excessive degradation or failure of a hardness critical item is detected, to restore the HEMP protection subsystem to a satisfactory condition and level of performance. Corrective maintenance includes removal, repair or replacement, reassembly, and checkout of the completed work.

3.3.5 Electromagnetic barrier. The topologically closed surface created to prevent or limit HEMP fields and conducted transients from entering the enclosed space. The electromagnetic barrier consists of the facility HEMP shield and POE treatments; it encloses the protected volume and special protective volumes, if required..

3.3.6 Electromagnetic closure. A treatment to prevent excessive electromagnetic field leakage at an aperture POE. Examples of closure techniques at a seam between two metal plates include welding, brazing, or soldering and metal-to-metal contact under pressure applied with a mechanical fastening.

3.3.7 Electromagnetic stress. A voltage, current, charge, or electromagnetic field that acts on an equipment. If the electromagnetic stress exceeds the vulnerability threshold of the equipment, mission-aborting damage or upset may occur.

3.3.8 Facility HEMP shield. The continuous conductive housing that substantially reduces the coupling of HEMP electric and magnetic fields into the protected volume. The facility HEMP shield is part of the electromagnetic barrier.

Downloaded from http://www.everyspec.com

3.3.9 HEMP acceptance test. An acceptance test of a system, subsystem, or component performed to ensure that specified HEMP performance characteristics have been met. HEMP acceptance tests, conducted near the conclusion of a hardening construction or installation contract, are tests for the purpose of demonstrating that at least minimum performance requirements of the HEMP protection subsystem have been achieved before the subsystem is accepted by the Government from the contractor.

3.3.10 HEMP hardness. A quantitative description of the resistance of a system or component to temporary or permanent malfunction or degraded performance induced by HEMP. HEMP hardness is achieved through adhering to appropriate design specifications and is verified by one or more test and analysis techniques.

3.3.11 HEMP hardness assurance. Procedures and activities performed during the construction or production phase to confirm that the end product meets the HEMP hardness design specifications. Hardness assurance includes those aspects of quality assurance that deal with hardening component and subassembly testing, acceptance testing, and initial verification testing to confirm that design specifications have been met.

3.3.12 HEMP hardness configuration baseline. The functional and physical characteristics of the HEMP protection measures achieved in the "as-built" facility and documented in the facility drawings and technical manuals.

3.3.13 HEMP hardness critical item (HCI). An item at any assembly level having performance requirements for the purpose of providing HEMP protection. Nuclear HCIs provide protection from environments produced by a nuclear event or are specially designed to operate under nuclear weapon (device)-derived stresses. HEMP HCIs are the elements of the HEMP protection subsystem. A hardness critical assembly is a top-level definable unit of HEMP HCIs and other components, such as mounting hardware and terminal posts, that may not be hardness critical.

3.3.14 HEMP hardness critical process (HCP). A process, specification, or procedure that must be followed exactly to ensure that the associated HCI attains its required performance.

3.3.15 HEMP hardness maintenance (HM). Preventive maintenance (e.g., adjustments or cleaning) and corrective maintenance (e.g., repairs or replacements) on the HEMP protection subsystem or its HCIs and assemblies. These HM activities are intended to eliminate faults or to preserve specified HEMP protection subsystem performance levels.

3.3.16 HEMP hardness maintenance and hardness surveillance (HM/HS). The combined preventive maintenance, inspection, test, and repair activities accomplished on a HEMP-protected operational facility to ensure that HEMP hardness is retained throughout the facility

Downloaded from http://www.everyspec.com

life cycle. HM/HS, along with hardness assurance and hardness configuration management, constitute a total hardness assurance, maintenance, and surveillance program.

3.3.17 HEMP protection subsystem. The electromagnetic barrier and all special protective measures installed for the purpose of hardening the mission-critical systems against the HEMP environment.

3.3.18 HEMP hardness surveillance (HS). Inspections and tests of the HEMP protection subsystem or its HCIs and assemblies. These HS activities are intended to observe and monitor the condition and performance of the hardening elements and to detect faults.

3.3.19 HEMP hardness surveillance/reverification testing. Testing conducted at prescribed intervals during the operational phase of the facility life cycle for evaluating whether the HEMP protection measures continue to provide the required HEMP hardness. HS/reverification test requirements are established in the technical manual. They typically require repetition of some or all of the test procedures from the original verification test program.

3.3.20 Low-risk HEMP hardening. A hardening technique that features a high-quality electromagnetic barrier with minimized and protected POEs. Virtually all mission-critical communications-electronics and support equipment are placed in the protected volume enclosed by the barrier and operate in a relatively benign electromagnetic environment, isolated from the external HEMP stresses. The low-risk approach results in a well-defined HEMP protection subsystem configuration with inherent testability.

3.3.21 Main barrier electrical POE protective device. A protective device installed on an electrical conductor that penetrates from the system exterior, through the HEMP shield, and into the protected volume. Main barrier protective devices must meet the performance requirements of this standard.

3.3.22 Mission-critical systems (MCS). All communications-electronics and support equipment required to perform critical trans- and post-HEMP attack missions. In the context of this standard, MCS refer to equipment that must be hardened to perform missions specified to be accomplished during or after exposure to a HEMP environment.

3.3.23 Norton equivalent circuit or Norton source. A circuit, consisting of a current source in parallel with an impedance, that has equivalent characteristics to those of the represented circuit over the operating range of interest.

3.3.24 Penetrating conductor. Any electrical wire or cable or other conductive object, such as a metallic rod, that passes through the electromagnetic barrier. Penetrating conductors are also called conductive POEs.

Downloaded from http://www.everyspec.com

3.3.25 Penetration entry area. That area of the electromagnetic barrier where long penetrating conductors (such as an electrical power feeder) and piping POEs are concentrated.

3.3.26 Performance degradation. Changes in one or more performance characteristics of a component or assembly, such that it no longer operates within the required functional range.

3.3.27 Point-of-entry (POE). A location on the electromagnetic barrier where the shield is penetrated and HEMP energy may enter the protected volume unless an adequate POE protective device is provided. POEs are classified as aperture POEs or penetrating conductors according to the type of penetration. They are also classified as architectural, mechanical, structural, or electrical POEs according to the architectural-engineering discipline in which they are usually encountered.

3.3.28 POE protective device or POE treatment. The protective measure used to prevent or limit HEMP energy from entering the protected volume at a POE. Common POE protective devices include waveguides below cutoff and electromagnetic closure plates for aperture POEs and filters and electric surge arresters on penetrating conductors. The three categories of electrical POE protective devices installed on penetrating conductors are main barrier POE protective devices, primary special POE protective devices, and secondary special POE protective devices.

3.3.29 Preventive maintenance. Scheduled maintenance actions. These actions are performed on a regular basis. Preventive maintenance includes scheduled adjustments, cleaning, and replacement of items with limited lifetimes.

3.3.30 Primary special electrical POE protective device. A protective device installed on an electrical conductor that penetrates from the system exterior, through the HEMP shield, into a special protective volume. A primary special protective device is designed to provide the maximum attenuation possible without interfering with the normal operational electrical signals that are routed on the penetrating conductor.

3.3.31 Protected volume. The three-dimensional space enclosed by the electromagnetic barrier, but not including those spaces that are also within special protective volumes.

3.3.32 Pulsed current injection (PCI). A test method for measuring performance of a POE protective device on a penetrating conductor. A HEMP threat-relatable transient is injected on the penetrating conductor at a point outside the electromagnetic barrier, and the residual internal transient stress is measured inside the barrier.

3.3.33 Residual internal stress. The electromagnetic voltages, currents, charges, or fields that originate from the HEMP environment and penetrate into the protected volume after attenuation by elements of the electromagnetic barrier.

Downloaded from http://www.everyspec.com

3.3.34 Retrofit HEMP hardening. An action taken to modify in-service HEMP protective equipment. Retrofit HEMP hardening is the installation or substantial upgrade of the HEMP protection subsystem for an existing facility or equipment.

3.3.35 Secondary special electrical POE protective device. A protective device installed on an electrical conductor that penetrates from a special protective volume into the main protected volume. It is used only when necessary to augment the attenuation provided by the primary special POE protective device and the connected equipment. The total attenuation through the primary special POE protective device, the connected equipment, and the secondary special POE protective device must meet the performance requirements of this standard.

3.3.36 Shielded enclosure leak detection system (SELDS). Any of a class of commercially available instruments designed for checking shielding effectiveness in the magnetic field test regime. Most of these instruments operate at one or more discrete frequencies, often of the order of 100 kHz.

3.3.37 Special protective measures. All HEMP hardening measures required in addition to implementation of the electromagnetic barrier. Special protective measures are necessary for MCS outside the barrier, for MCS that are within the protected volume and experience damage or upset during verification testing, and in cases requiring special protective volumes.

3.3.38 Special protective volume. A HEMP-protected space within the facility, where electromagnetic stresses due to HEMP may exceed the residual internal stress limits for the protected volume. The special protective barrier may be a separate shield with protected penetrations; more commonly, shielded cables or conduits and equipment cabinets and closed piping systems are used to provide the needed electromagnetic isolation from the protected volume.

3.3.39 Verification testing. Tests conducted for demonstrating that the installed HEMP protection subsystem provides the required HEMP hardness. These tests are performed after the construction and acceptance testing are complete and after the equipment is installed and functioning to determine if the operational system suffers mission-aborting damage or upset due to simulated HEMP excitations. Verification is normally a Government-conducted test and is not part of a facility construction contract.

3.3.40 Vulnerability threshold (of an equipment). The minimum stress level that causes the equipment to suffer definite damage or performance degradation. In the context of this standard, the vulnerability threshold is the minimum electromagnetic stress that causes mission-aborting damage or upset.

3.3.41 Waveguide below cutoff (WBC). A metallic waveguide whose primary purpose is to attenuate electromagnetic waves at frequencies below the cutoff frequency (rather than

Downloaded from http://www.everyspec.com

propagating waves at frequencies above cutoff). The cutoff frequency is determined by the transverse dimensions and geometry of the waveguide and properties of the dielectric material in the waveguide.

3.3.42 Waveguide-below-cutoff array. An assembly of parallel waveguides below cutoff, with adjacent cells usually sharing common cell walls. A waveguide-below-cutoff array is used when the area of the shield aperture required to obtain adequate fluid flow within pressure drop limitations is larger than the permissible area of a single waveguide below cutoff.

Downloaded from http://www.everyspec.com

4. GENERAL REQUIREMENTS

4.1 General.

4.1.1 HEMP protection overview. The need exists for uniform and effective hardening, hardness verification, and hardness maintenance and hardness surveillance of fixed ground-based command, control, communications, computer, and intelligence ($FGBC^4I$) systems that require network interoperability during and after exposure to HEMP environments. In critical time-urgent applications where some momentary upsets, as well as damage, are mission-aborting, the hardening requirements include stringent shielding, POE protection, and special protective measures. Since normal operational experience may not indicate the condition of the HEMP protection subsystem, thorough verification testing and HM/HS are necessary over the life of the facility. For additional information, refer to supporting handbook MIL-HDBK-423, Volume I: Fixed Facilities.

4.1.2 Integration with related requirements. Elements of the HEMP protection subsystem can serve multiple purposes. For example, the electromagnetic barrier can also be used to meet emanations security requirements. HEMP hardening measures should be integrated with those of other electromagnetic disciplines, such as electromagnetic interference/ electromagnetic compatibility, lightning protection, and TEMPEST, and with treatments for other hardening requirements. The performance requirements of this standard are for HEMP protection only; increases in the required performance may be needed for protection from other electromagnetic environments, in addition to HEMP.

4.2 Hardness program overview. Hardness programs[2] for fixed ground-based systems being HEMP hardened in accordance with (IAW) requirements of this standard shall implement DoD acquisition policy and procedures. Design, engineering, fabrication, installation, and testing activities shall be organized to accomplish the following objectives:

a. To provide a HEMP-protected system design based upon verifiable performance specifications.

b. To verify hardness levels through a cost-effective program of testing and analysis.

c. During the acquisition process, to develop a maintenance/surveillance program that supports the operational phase of life cycle HEMP hardness.

---

[2]HEMP planning, analysis, design, test procedures, test reporting documentation, and requirements for HM/HS program development and execution are described in MIL-HDBK-423, Volume I: Fixed Facilities.

Downloaded from http://www.everyspec.com

d. To establish the HEMP configuration baseline, consisting of documentation of the functional and physical characteristics of the HEMP protection subsystem, and baseline performance data.

4.3 HEMP hardening design. Facility protection against the HEMP threat environment specified in MIL-STD-2169 shall be achieved with an electromagnetic barrier and with additional special protective measures, as required. The electromagnetic barrier shall consist of the facility HEMP shield and protective devices for all POEs. Special protective measures shall be implemented for hardening MCS that must be placed outside the barrier and for other special cases. Reliability, maintainability, safety and human engineering, testability, configuration management, and corrosion control shall be incorporated into the HEMP protection subsystem design.

4.3.1 Facility shield. The facility HEMP shield shall be a continuous conductive enclosure that meets or exceeds shielding effectiveness requirements of this standard (see 5.3.1). The shield is normally constructed of a metal, such as steel or copper. Other materials may be used if they can provide the required shielding effectiveness and are fully compatible with the POE protective treatments and grounding reuqirements.

4.3.2 POEs. The number of shield POEs shall be limited to the minimum required for operational, life-safety, and habitability purposes. Each POE shall be HEMP protected with a POE protective device that satisfies performance requirements of this standard (see 5.4 through 5.7).

4.3.3 MCS. All equipment required to perform critical time-urgent missions during trans- and post-attack time periods shall be designated as MCS. MCS includes such items as communications-electronics equipment, data processing subsystems, command and control equipment, local portions of hardened interconnects,[3] and critical support subsystems such as power generation, power distribution, and environmental control.

4.3.3.1 MCS within the electromagnetic barrier. All MCS that will operate satisfactorily and compatibly inside the facility HEMP shield shall be installed within the electromagnetic barrier. No HEMP-unique performance characteristics are required in design and selection of MCS that will be housed within the barrier.

4.3.3.2 MCS outside the electromagnetic barrier. MCS, such as a radio antenna or evaporative heat exchanger, that must be placed outside the electromagnetic barrier, shall be

[3]Although they are not included within the scope of the document, HEMP-hardened interconnects and survivable long-haul communication circuits to other hardened facilities in the network must be made available as required for mission accomplishment.

Downloaded from http://www.everyspec.com

provided with special protective measures as required to ensure HEMP hardness in the HEMP threat environment (see 5.8).

4.3.3.3 HEMP-hardened electrical power. The facility shall be provided with HEMP-hardened electrical power generation and distribution capability sufficient to perform trans- and post-attack missions, without reliance upon commercial electrical power sources.

4.3.4 Special protective measures. Special protective measures shall be implemented in cases where HEMP hardness cannot be achieved with the electromagnetic barrier alone. Additional shielding, transient suppression/ attenuation devices, and equipment-level protection shall be provided as required to achieve HEMP hardness. The three categories of cases requiring special protective measures are as follows:

a. MCS that must be located outside the electromagnetic barrier and, therefore, are not protected by the barrier (see 5.8.1).

b. MCS that are enclosed within the electromagnetic barrier and experience mission-aborting damage or upset during verification testing, even though the barrier elements satisfy all performance requirements (see 5.8.2).

c. Special protective volumes and barriers to provide supplementary isolation, when POE protective devices cannot satisfy the barrier requirements without interfering with facility operation (see 5.8.3).

4.4 HEMP testing. The HEMP testing program shall demonstrate that hardness performance requirements have been satisfied and that the required HEMP hardness has been achieved. This program shall include quality assurance testing during facility construction and equipment installation, acceptance testing for the electromagnetic barrier and special protective measures, and verification testing of the completed and operational facility.

4.4.1 Quality assurance program. A quality assurance program shall be implemented during system construction and installation to demonstrate that the HEMP protection subsystem materials and components comply with performance requirements of this standard. The quality assurance test procedures and results shall be documented and retained for use as baseline configuration and performance data for the HM/HS program.

4.4.2 Acceptance testing. Acceptance of the HEMP protection subsystem shall be based upon successful demonstrations of compliance with hardness performance requirements of this standard. HEMP acceptance tests of the electromagnetic barrier and special protective measures shall be conducted after all related construction work has been completed. Acceptance test procedures and results shall be documented and retained for use as baseline configuration and performance data.

Downloaded from http://www.everyspec.com

4.4.3 Verification testing. After completion of the HEMP protection subsystem and installation, operational checks, and acceptance testing of the facility equipment, HEMP hardness of the facility shall be verified through a program of tests and supporting analysis. The verification program shall provide a definitive statement on the HEMP hardness of critical time-urgent mission functions at the facility under test. Verification test procedures and results shall be documented and retained for use as baseline configuration and performance data.

4.5 HM/HS.

4.5.1 HM/HS program development. HM/HS considerations shall be included in the facility planning, design, and construction phases to facilitate life cycle survivability and the development of an effective HM/HS program. The HM/HS program shall be designed to maintain the protection subsystem at a level of performance that meets the requirements in this standard over the life of the facility.

4.5.2 HM/HS program implementation. During the verification phase, baseline data shall be obtained for the HM/HS program. The HM/HS program shall be implemented in the operation and support phase of the facility life cycle. Effectiveness of the HM/HS program for maintaining the HEMP protection subsystem performance at the required level shall be periodically reviewed, and program revisions shall be made when required.

Downloaded from http://www.everyspec.com

5. DETAILED REQUIREMENTS

5.1 HEMP protection subsystem topology.

5.1.1 Electromagnetic barrier topology. The electromagnetic barrier, consisting of the facility HEMP shield and POE protective devices, shall be configured to accomplish the following technical requirements:

a. To enclose all MCS except those equipments such as radio antennas, evaporative heat exchangers, or external security sensors, which will not function properly if placed within the protected volume.

b. To minimize the number of POEs.

c. To minimize requirements for special protective measures internal to the barrier.

d. To facilitate HEMP acceptance and verification testing.

e. To minimize requirements for scheduled HM.

5.1.2 Penetration entry area. As a design objective, there should be a single penetration entry area on the electromagnetic barrier for all piping and electrical POEs except those connected to external conductors less than 10 m (32.8 ft) in length. The penetration entry area shall be located as far from normal and emergency personnel and equipment accesses and ventilation POEs as is permitted by the facility floor plan.

5.2 Facility grounding.

5.2.1 Equipotential ground plane. Fixed ground-based C^4I facilities shall be grounded using the equipotential ground plane method IAW guidance in MIL-HDBK-419. The facility HEMP shield shall form a major portion of the equipotential ground plane.

5.2.2 Grounding to the facility HEMP shield. Grounds for equipment and structures enclosed within the protected volume shall be electrically bonded to the inside surface of the shield. Grounds for equipment and structures outside the electromagnetic barrier shall be electrically bonded to the outside surface of the shield or to the earth electrode subsystem. Ground straps or cables used to connect the facility shield (equipotential ground plane) to the earth electrode subsystem shall be electrically bonded to the outside surface of the shield, and at least one such ground strap or cable shall be located at the penetration entry area. All grounding connections to the facility HEMP shield shall be made in a manner that does not create POEs.

Downloaded from http://www.everyspec.com

5.3 Facility HEMP shield.

5.3.1 Shielding effectiveness. The facility HEMP shield, with all POE protective devices installed, shall provide at least the minimum shielding effectiveness shown on figure 1.

5.3.2 Shield configuration. The facility HEMP shield, exclusive of its POEs, shall be a continuous conductive enclosure, normally constructed of a metal such as steel or copper. The enclosure shield shall be electromagnetically closed at all seams and joints between adjacent panels on the wall, ceiling, and floor surfaces.

5.3.3 Shield monitoring capability. A built-in test capability to at least qualitatively monitor for electromagnetic shield leakage shall be provided (see 5.11).

5.3.4 Shield construction quality assurance. In-progress inspection and testing of shield seams and joints, including those used for installation of POE protective devices, should proceed continuously in parallel with the shield fabrication and assembly activity.

5.3.5 Shield acceptance testing. After completion of the shield and after installation of the POE protective devices, internal equipments, and finish work provided under the construction contract, the shield acceptance test shall be conducted to determine if the facility shield performs IAW minimum requirements of figure 1. The test shall be conducted with POEs and their protective devices in a normal operating configuration, using shielding effectiveness test procedures of Appendix A. All defects found during the acceptance testing shall be corrected, retested, and shown to provide the required performance.

5.3.5.1 Facility shield modifications. If POEs are added or the facility HEMP shield is breached and repaired after acceptance, shield acceptance testing in the affected area shall be repeated.

5.4 Architectural POEs.

5.4.1 HEMP protection for architectural POEs. HEMP protection for architectural POEs, including personnel entryways and exits and equipment accesses through the facility shield, shall be provided with electromagnetic closure, waveguide-below-cutoff techniques, or combinations of closure and waveguides below cutoff.

5.4.2 Personnel entryways and exits. HEMP protection for all normal and emergency personnel entryways and exits shall be provided with a two-door shielded waveguide-below-cutoff entryway (figure 2a) or with a two-door shielded vestibule (figure 2b). As design objectives, the number of personnel entryways and exits should be constrained to the minimum requirements of NFPA 101, entryway doors should be at 90 degrees to each other, and the main personnel entryway should be a waveguide below cutoff.

Downloaded from http://www.everyspec.com

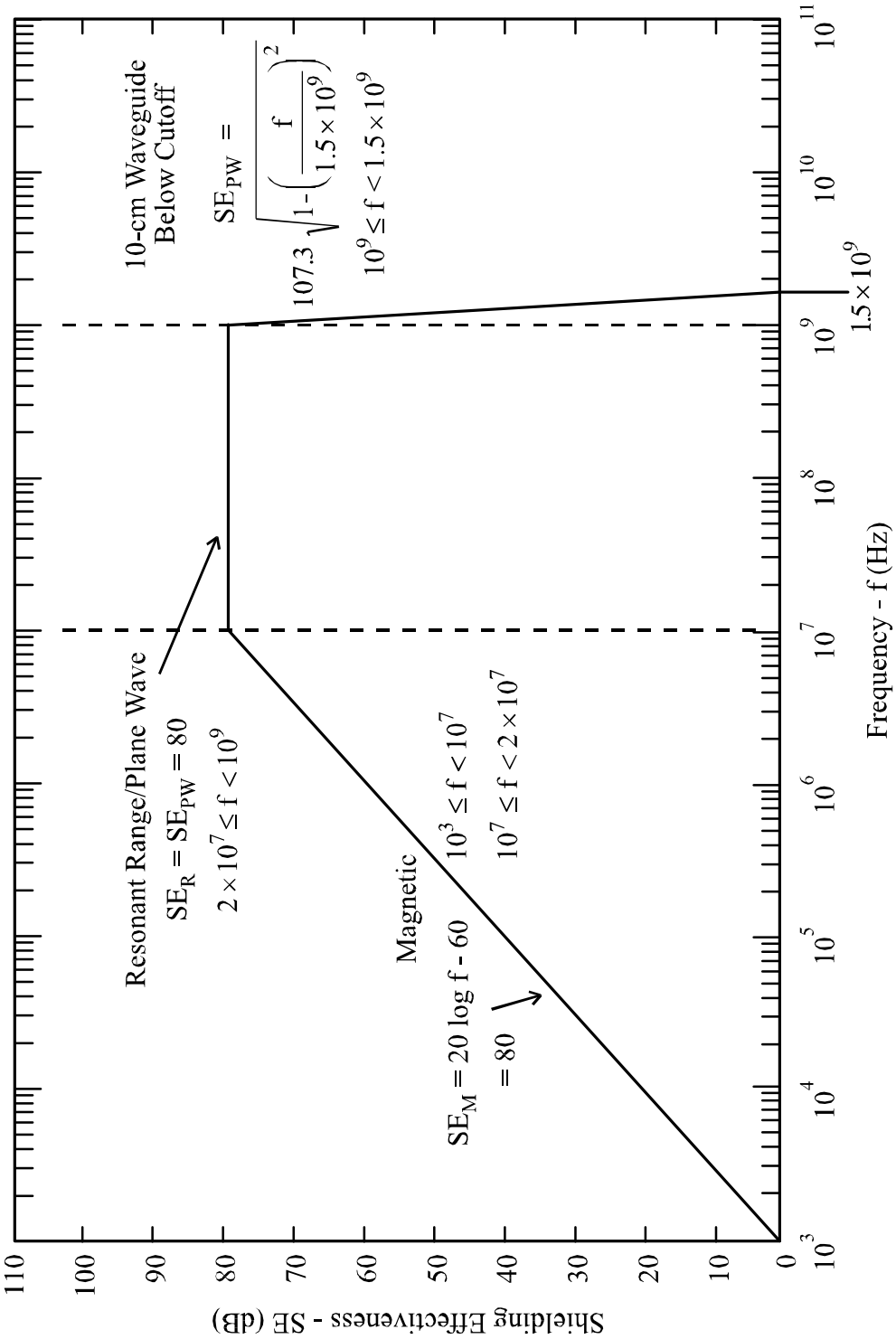

FIGURE 1. Minimum HEMP shielding effectiveness requirements (measured IAW procedures of Appendix A).

Downloaded from http://www.everyspec.com

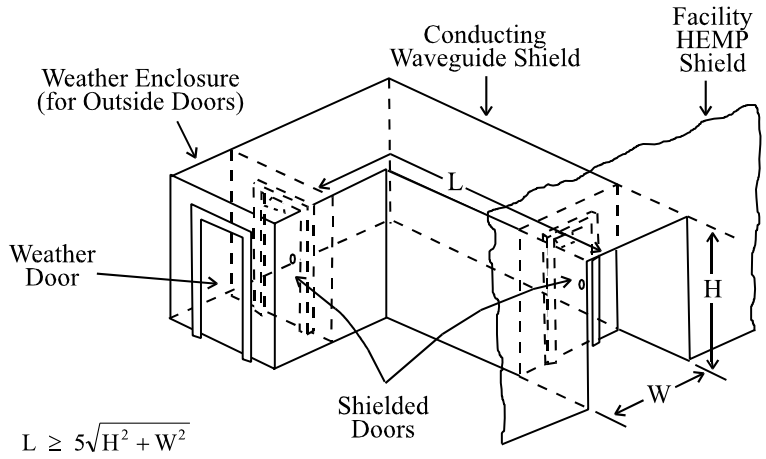

a. Waveguide entryway.

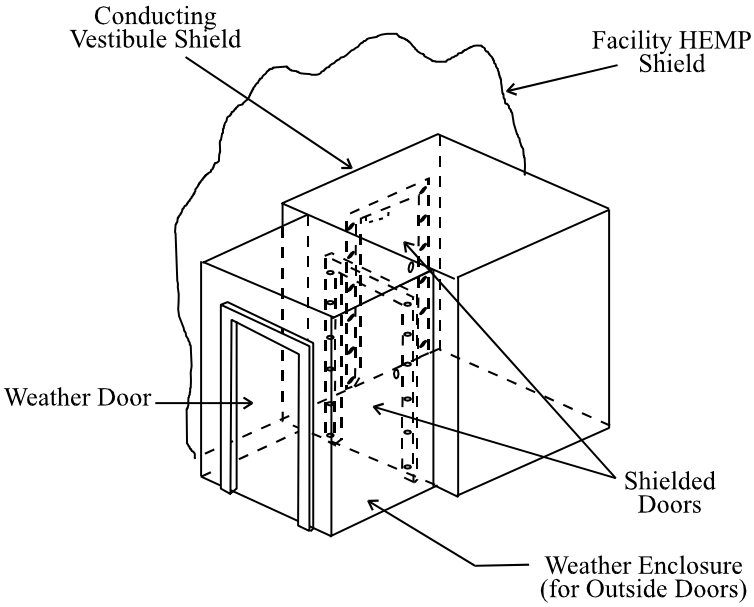

b. Vestibule entryway.

FIGURE 2. Typical waveguide and vestibule entryways

Downloaded from http://www.everyspec.com

5.4.2.1 Waveguide entryway dimensions. When a waveguide-below-cutoff entryway is used, height and width of the waveguide shall be the minimum dimensions needed to accommodate the personnel traffic, and the length of the waveguide along its shortest path shall be at least five times the diagonal dimension of the cross-section. As a design objective, no electrical wiring, piping, or other conductors should run longitudinally inside the waveguide entryway. Where electrical wiring cannot be eliminated from the entryway, it should be run in metal conduit. All conduits and other groundable conductors, such as pipes or handrails, in the waveguide entryway should periodically be electrically bonded to the entryway shield.

5.4.2.2 Entryway shield. The entryway shield shall comply with the same requirements applicable to the facility HEMP shield (see 5.3). All entryway POEs, either into the facility protected volume or to the outside, shall comply with the same requirements applicable to other POEs through the electromagnetic barrier (see 5.5 through 5.7).

5.4.2.3 Entryway shielded doors. When installed, vestibule shielded doors and shielded doors in waveguides whose height or width is greater than 2.44 m (8 ft) shall provide at least the minimum shielding effectiveness shown on figure 1. Entryway doors in waveguides whose height and width do not exceed 2.44 m shall provide at least the minimum resonant range and plane wave shielding effectiveness shown on figure 1, but are not required to satisfy the magnetic shielding effectiveness criteria because of the low-frequency attenuation provided by the waveguide. Exterior shielded doors shall be protected from corrosion and exposure to blown dust and other natural elements.

5.4.2.4 Entryway interlocks and alarms. The entryway shielded doors shall be provided with interlocks to ensure that at least one of the shielded doors remains closed except during emergency evacuations. The entryway shielded doors shall be provided with an alarm to indicate that the interlock has been overridden or that both shielded doors are open.

5.4.3 Equipment accesses. A protected equipment access POE shall be provided only when movement of the equipment through a personnel entryway is not practical. HEMP protection for equipment accesses through the facility HEMP shield shall be provided with electromagnetic closure. When closed, the equipment access covers shall provide at least the minimum shielding effectiveness shown on figure 1. Exterior access covers shall be protected from corrosion and exposure to blown dust and other natural elements.

5.4.4 Acceptance testing for architectural POE protective devices. Acceptance testing for architectural POE protective devices shall be conducted using shielding effectiveness test procedures of Appendix A. All defects found during the acceptance testing shall be corrected, retested, and shown to provide the required performance.

Downloaded from http://www.everyspec.com

5.5 Mechanical POEs.

5.5.1 HEMP protection for mechanical POEs. HEMP protection for mechanical POEs, including piping and ventilation penetrations through the facility HEMP shield, shall be provided with waveguide-below-cutoff techniques. As design objectives, the number of piping POEs should be constrained to fewer than 20 and the number of ventilation POEs should be constrained to fewer than 10.

5.5.2 Piping POEs. Piping shall penetrate the facility HEMP shield as metallic pipe sections that are configured as single waveguides below cutoff or WBC arrays (figure 3). Dielectric hoses or pipes shall be converted to metal piping before penetrating the shield. The presence of protected piping POEs shall not degrade shielding effectiveness of the facility HEMP shield below the minimum requirements shown on figure 1.

The inside diameter of a single waveguide below cutoff and each of the transverse cell dimensions in a WBC array shall be limited such that the waveguide cutoff frequency is at least 1.5 GHz. The length of the waveguide section shall be sufficient to provide at least 80 dB attenuation at 1 GHz, except where a special protective volume will be established (see 5.8.3.1). No dielectric (glass, plastic, etc.) pipe lining shall be permitted in the waveguide section. External and internal piping shall be connected at the ends of the waveguide section; no HEMP-unique requirements apply to these couplings.

5.5.3 Ventilation POEs. Ventilation ducts shall penetrate the facility HEMP shield in sections of metallic ducting that are configured as waveguide-below-cutoff array panels (figure 4). The presence of the protected ventilation POEs shall not degrade shielding effectiveness of the facility HEMP shield below the minimum requirements shown on figure 1.

Each of the transverse cell dimensions of the WBC array shall be limited such that the waveguide cutoff frequency is at least 1.5 GHz. The length of the waveguide shall be sufficient to provide at least 80 dB attenuation at 1 GHz. No conductors shall be permitted to pass through the waveguide.

5.5.4 Acceptance testing for mechanical POE protective devices. Acceptance testing for mechanical POE protective devices, including those for piping and ventilation penetrations, shall be conducted using shielding effectiveness test procedures of Appendix A. All defects found during the acceptance testing shall be corrected, retested, and shown to provide the required performance.

5.6 Structural POEs.

5.6.1 HEMP protection for structural POEs. HEMP protection for structural POEs, including beams, columns, and other metallic structural elements that must penetrate the

Downloaded from http://www.everyspec.com

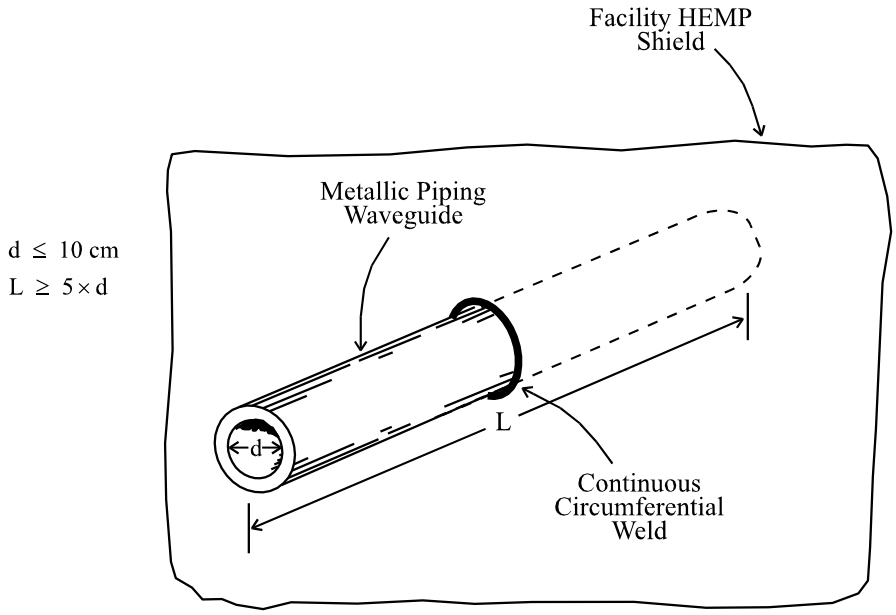

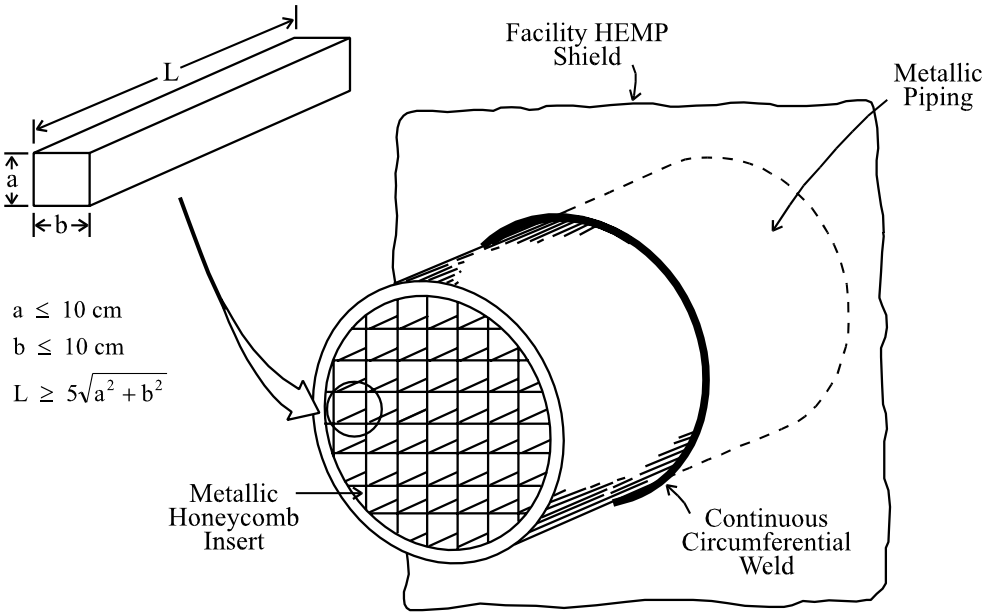

FIGURE 3. Typical waveguide-below-cutoff piping POE protective devices.

Downloaded from http://www.everyspec.com

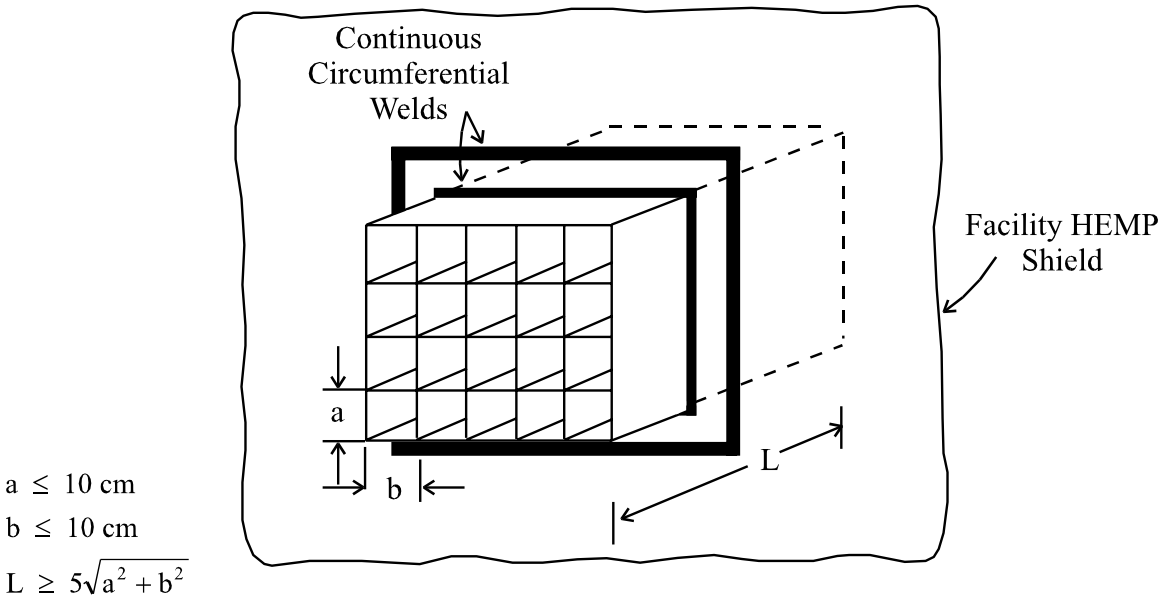

FIGURE 4. Typical waveguide-below-cutoff array ventilation POE protective device.

electromagnetic barrier, shall be provided with continuous electromagnetic closure between the penetrating elements and the facility shield. As a design objective, the facility should be configured to minimize the number of metallic structural elements required to penetrate the barrier. Nonmetallic structural elements shall not penetrate the electromagnetic barrier.

5.6.2 Acceptance testing for structural POE protective treatments. Acceptance testing for structural POE protective treatments shall be conducted using shielding effectiveness test procedures of Appendix A. All defects found during the acceptance testing shall be corrected, retested, and shown to provide the required performance.

5.7 Electrical POEs.

5.7.1 HEMP protection for electrical POEs. HEMP protection for electrical POEs, including all power, communications, and control penetrating conductors whether shielded or unshielded, shall be provided with main barrier transient suppression/attenuation devices (except under conditions identified in 5.7.7). The presence of protected electrical POEs shall not degrade shielding effectiveness of the facility HEMP shield below minimum requirements shown on figure 1.

Downloaded from http://www.everyspec.com

The main barrier transient suppression/attenuation device (figure 5) shall consist of linear and nonlinear elements, as required to satisfy the performance requirements. The main barrier protective device shall limit the norms of the residual internal transient stresses to the maximums prescribed for each class of electrical POE, when prescribed pulses are injected at its external terminal (see table I). Additionally, the main barrier protective device shall be rated to withstand a sufficient number of test pulses at the prescribed peak injection current without damage or unacceptable performance degradation to accommodate life cycle testing.

5.7.2 Commercial electrical power feeder POEs. A main barrier transient suppression/ attenuation device shall be provided on each penetrating conductor of a commercial electrical power feeder POE. The section of the commercial power feeder immediately outside the electromagnetic barrier shall be buried for a length of at least 16 m (52.5 ft). As a design objective, a maximum of two commercial electrical power feeders should penetrate the facility HEMP shield.

5.7.2.1 Commercial power main barrier POE protective device requirements. A Norton source, with a 2500-A short-circuit current, ≤ 20-ns risetime and 500-550-ns full-width at half-maximum amplitude (FWHM), and source impedance ≥ 60 Ω, connected to a penetrating conductor at the main barrier POE protective device external terminal, shall produce a residual internal transient stress no greater than 10 A and shall not cause device damage or performance degradation.[4] A Norton source, with a short-circuit current of 250 A, ≤ 1.5-µs risetime and 3-5-ms FWHM, and source impedance ≥ 10 Ω, connected at the main barrier POE protective device external terminal, shall not cause device damage or performance degradation.[4] A Norton source, with a 1000-A short-circuit current, ≤ 0.2-s risetime and 20-25-s FWHM, and source impedance ≥ 5 Ω, connected at the main barrier POE protective device external terminal[5], shall not cause device damage or performance degradation.[4] If a main barrier POE protective device cannot be designed to satisfy the residual internal stress limits without interfering with operational signals that it is required to pass, a special protective volume shall be established (see 5.8.3.2). As a design objective, each commercial power feeder should be provided with a device to automatically disconnect the incoming lines if a HEMP event occurs or to manually disconnect during alert conditions.

---

[4]Common mode PCI requirements, waveform details of the injected pulses, circuit test configuration information, and additional constraints on the residual internal transient stress are contained in table I and in the PCI test procedures of Appendix B.

[5]The POE protective device for an intersite commercial power or audio/data line may consist of a transformer or dielectric isolator installed on the line side of an electric surge arrester (ESA)/filter assembly, where the transformer or dielectric isolator provides hardening against the long pulse and the ESA/filter provides intermediate and short pulse protection. The long pulse is injected on the line side of the transformer or dielectric isolator in such a case, and the intermediate and short pulses are injected at the external terminal of the ESA/filter assembly.

Downloaded from http://www.everyspec.com

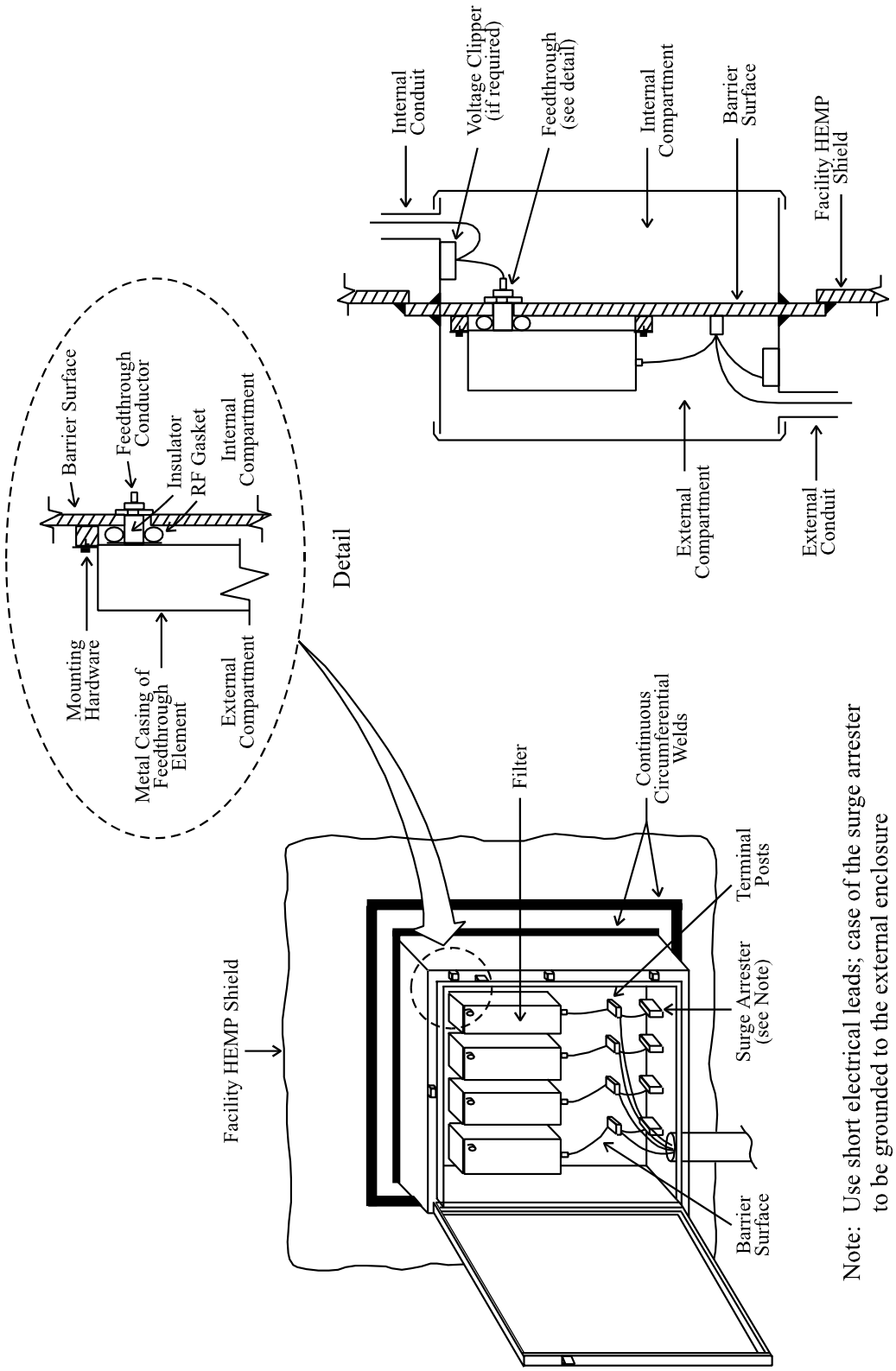

Note: Use short electrical leads; case of the surge arrester to be grounded to the external enclosure

FIGURE 5. Typical electric POE protective device.

Downloaded from http://www.everyspec.com

TABLE I. Injected pulse characteristics and residual internal stress limits for classes of electrical POEs.

a. Electrical POEs, except RF antenna line POEs.

Class of Electrical POE	Pulsed Current Injection Requirements[1]			
	Type of Injection	Peak Short-Ckt Current (A)	Risetime (s)	FWHM[2] (s)
Commercial Power Lines (Intersite)				
Short Pulse	Common mode	5,000	$\leq 2\times10^{-8}$	5×10^{-7}–5.5×10^{-7}
Short Pulse	Wire-to-ground	2,500	$\leq 2\times10^{-8}$	5×10^{-7}–5.5×10^{-7}
Intermediate Pulse	Common mode	250	$\leq 1.5\times10^{-6}$	3×10^{-3}–5×10^{-3}
Intermediate Pulse	Wire-to-ground	250	$\leq 1.5\times10^{-6}$	3×10^{-3}–5×10^{-3}
Long Pulse	Common mode	[3]1,000	≤ 0.2	[3]20–25
Long Pulse	Wire-to-ground	[3]1,000	≤ 0.2	[3]20–25
Other Power Lines (Intrasite)				
Unrestricted Lines				
Short Pulse	Common mode	5,000	$\leq 2\times10^{-8}$	5×10^{-7}–5.5×10^{-7}
Short Pulse	Wire-to-ground	2,500	$\leq 2\times10^{-8}$	5×10^{-7}–5.5×10^{-7}
Restricted Lines				
Short Pulse	Common mode	800	$\leq 2\times10^{-8}$	5×10^{-7}–5.5×10^{-7}
Short Pulse	Wire-to-ground	[4]$800/\sqrt{N}$ or 500	$\leq 2\times10^{-8}$	5×10^{-7}–5.5×10^{-7}
Audio/Data Lines (Intersite)				
Short Pulse	Common mode	5,000	$\leq 2\times10^{-8}$	5×10^{-7}–5.5×10^{-7}
Short Pulse	Wire-to-ground	[4]$5{,}000/\sqrt{N}$ or 500	$\leq 2\times10^{-8}$	5×10^{-7}–5.5×10^{-7}
Intermediate Pulse	Common mode	250	$\leq 1.5\times10^{-6}$	3×10^{-3}–5×10^{-3}
Intermediate Pulse	Wire-to-ground	250	$\leq 1.5\times10^{-6}$	3×10^{-3}–5×10^{-3}
Long Pulse	Common mode	[3]1,000	≤ 0.2	[3]20–25
Long Pulse	Wire-to-ground	[3]1,000	≤ 0.2	[3]20–25
Control/Signal Lines (Intrasite)				
Unrestricted Low-Voltage Lines[5]				
Short Pulse	Common mode	5,000	$\leq 2\times10^{-8}$	5×10^{-7}–5.5×10^{-7}
Short Pulse	Wire-to-ground	[4]$5{,}000/\sqrt{N}$ or 500	$\leq 2\times10^{-8}$	5×10^{-7}–5.5×10^{-7}
Unrestricted High-Voltage Lines[5]				
Short Pulse	Common mode	5,000	$\leq 2\times10^{-8}$	5×10^{-7}–5.5×10^{-7}
Short Pulse	Wire-to-ground	[4]$5{,}000/\sqrt{N}$ or 500	$\leq 2\times10^{-8}$	5×10^{-7}–5.5×10^{-7}
Restricted Lines				
Short Pulse	Common-mode	800	$\leq 2\times10^{-8}$	5×10^{-7}–5.5×10^{-7}
Short Pulse	Wire-to-ground	[4]$800/\sqrt{N}$ or 500	$\leq 2\times10^{-8}$	5×10^{-7}–5.5×10^{-7}
Conduit Shields				
Signal and Low Current Power[6]				
Buried[7]	Conduit-to-gnd	800	$\leq 2\times10^{-8}$	5×10^{-7}–5.5×10^{-7}
Nonburied	Conduit-to-gnd	5,000	$\leq 2\times10^{-8}$	5×10^{-7}–5.5×10^{-7}
Medium Current Power[6]				
Buried[7]	Conduit-to-gnd	800	$\leq 2\times10^{-8}$	5×10^{-7}–5.5×10^{-7}
Nonburied	Conduit-to-gnd	5,000	$\leq 2\times10^{-8}$	5×10^{-7}–5.5×10^{-7}
High Current Power[6]				
Buried[7]	Conduit-to-gnd	800	$\leq 2\times10^{-8}$	5×10^{-7}–5.5×10^{-7}
Nonburied	Conduit-to-gnd	5,000	$\leq 2\times10^{-8}$	5×10^{-7}–5.5×10^{-7}

Downloaded from http://www.everyspec.com

TABLE I. Injected pulse characteristics and residual internal stress limits for classes of electrical POEs - Continued.

a. Electrical POEs, except RF antenna line POEs (continued).

Class of Electrical POE	Residual Internal Stress Limits			
	Type of Measurement	Peak Response Current (A)	Peak Rate of Rise (A/s)	Root Action (A - $\sqrt{s}$)
Commercial Power Lines (Intersite)				
Short Pulse	Bulk current	≤ 10	$\leq 1\times10^{7}$	$\leq 1.6\times10^{-1}$
Short Pulse	Wire current	≤ 10	$\leq 1\times10^{7}$	$\leq 1.6\times10^{-1}$
Intermediate Pulse	Bulk current	No damage or performance degradation		
Intermediate Pulse	Wire current	No damage or performance degradation		
Long Pulse	Bulk current	No damage or performance degradation		
Long Pulse	Wire current	No damage or performance degradation		
Other Power Lines (Intrasite)				
Short Pulse	Bulk current	≤ 10	$\leq 1\times10^{7}$	$\leq 1.6\times10^{-1}$
Short Pulse	Wire current	≤ 10	$\leq 1\times10^{7}$	$\leq 1.6\times10^{-1}$
Audio/Data Lines (Intersite)				
Short Pulse	Bulk current	≤ 0.1	$\leq 1\times10^{7}$	$\leq 1.6\times10^{-3}$
Short Pulse	Wire current	≤ 0.1	$\leq 1\times10^{7}$	$\leq 1.6\times10^{-3}$
Intermediate Pulse	Bulk current	No damage or performance degradation		
Intermediate Pulse	Wire current	No damage or performance degradation		
Long Pulse	Bulk current	No damage or performance degradation		
Long Pulse	Wire current	No damage or performance degradation		
Control/Signal Lines (Intrasite)				
Low-Voltage Lines[5]				
Short Pulse	Bulk current	≤ 0.1	$\leq 1\times10^{7}$	$\leq 1.6\times10^{-3}$
Short Pulse	Wire current	≤ 0.1	$\leq 1\times10^{7}$	$\leq 1.6\times10^{-3}$
High-Voltage Lines[5]				
Short Pulse	Bulk current	≤ 1.0	$\leq 1\times10^{7}$	$\leq 1.6\times10^{-2}$
Short Pulse	Wire current	≤ 1.0	$\leq 1\times10^{7}$	$\leq 1.6\times10^{-2}$
Conduit Shields				
Signal and Low Current Power[6]				
Buried[7]	Bulk current	≤ 0.1	$\leq 1\times10^{7}$	$\leq 1.6\times10^{-3}$
Nonburied	Bulk current	≤ 0.1	$\leq 1\times10^{7}$	$\leq 1.6\times10^{-3}$
Medium Current Power[6]				
Buried[7]	Bulk current	≤ 1.0	$\leq 1\times10^{7}$	$\leq 1.6\times10^{-2}$
Nonburied	Bulk current	≤ 1.0	$\leq 1\times10^{7}$	$\leq 1.6\times10^{-2}$
High Current Power[6]				
Buried[7]	Bulk current	≤ 10	$\leq 1\times10^{7}$	$\leq 1.6\times10^{-1}$
Nonburied	Bulk current	≤ 10	$\leq 1\times10^{7}$	$\leq 1.6\times10^{-1}$

Downloaded from http://www.everyspec.com

TABLE I. Injected pulse characteristics and residual internal stress limits for classes of electrical POEs - Continued.

b. RF antenna line POEs.

Class of Electrical POE	Pulsed Current Injection Requirements[8]				
	Type of Injection	Dominant Response Frequency[9] (MHz)	Peak Short-Circuit Current (A)	Risetime (s)	FWHM[2] (s)
RF antenna line shield					
Buried[7]	Shield-to-gnd	Not applicable	800	$\leq 2\times10^{-8}$	5×10^{-7}–5.5×10^{-7}
Nonburied	Shield-to-gnd	Not applicable	5,000	$\leq 2\times10^{-8}$	5×10^{-7}–5.5×10^{-7}
RF antenna line signal conductor	Wire-to-shield	≤ 30	Threat-level[9]	$\leq 2\times10^{-8}$	5×10^{-7}–5.5×10^{-7}
	Wire-to-shield	>30	Threat-level[9]	$\leq 5\times10^{-9}$	Variable[9]

Class of Electrical POE	Residual Internal Stress Limits			
	Type of Measurement	Peak Response Current (A)	Peak Rate of Rise (A/s)	Root Action (A - $\sqrt{s}$)
Receive only antenna line	Shield Current	≤ 0.1	$\leq 1\times10^{7}$	$\leq 1.6\times10^{-3}$
	Wire Current	≤ 0.1	No damage or performance degradation	
Transmit and receive antenna line	Shield Current	≤ 0.1	$\leq 1\times10^{7}$	$\leq 1.6\times10^{-3}$
	Wire Current	≤ 1.0	No damage or performance degradation	

c. Notes for Table I.

[1]Pulse current injection requirements are in terms of Norton equivalent sources. Short-circuit currents are double exponential waveshapes. Source impedances are $\geq$ 60 Ω for the short pulse, $\geq$ 10 Ω for the intermediate pulse, and $\geq$ 5 Ω for the long pulse.

[2]FWHM is pulse full-width at half-maximum amplitude.

[3]The long pulse peak short-circuit current (1,000 A) and FWHM (20-25 s) are design objectives. Any double exponential waveform with peak short-circuit current $\geq$ 200 A, risetime $\leq$ 0.2 s, and peak current x FWHM product $\geq$ 2 x 10^4 A-s satisfies the minimum requirement.

Downloaded from http://www.everyspec.com

TABLE I. Injected pulse characteristics and residual internal stress limits for classes of electrical POEs - Continued.

c. Notes for Table I (continued).

[4]Whichever is larger. *N* is the number of penetrating conductors in the cable.

[5]Low-voltage control/signal lines are those with maximum operating voltage < 90 V. High-voltage control/signal lines are those with maximum operating voltage ≥ 90 V.

[6]High-current power lines have maximum operating current > 10 A. Medium-current power lines have maximum operating current between 1 A and 10 A. Low-current power lines have maximum operating current < 1 A.

[7]An antenna shield is considered buried when it terminates at a buried antenna and less than 1 m (3.3 ft) of its total length is not covered by earth or concrete fill. A conduit is considered buried when it connects two protected volumes and less than 1 m (3.3 ft) of its total length is not covered by earth or concrete fill.

[8]Pulse current injection requirements are in terms of Norton equivalent sources. The short pulse generator, with a source impedance ≥ 60 Ω, is used for shield-to-ground injections and for wire-to-shield injections at dominant response frequencies ≤ 30 MHz. A charge line pulser, with a source impedance ≥ 50 Ω, is used for wire-to-shield injections at dominant response frequencies > 30 MHz.

[9]The dominant response frequency (or frequencies) and threat-level peak short-circuit current are determined from extrapolated coupling measurements. The length ℓ of the charge line of the charge line pulser is the quarter-wavelength of the dominant response frequency; $\ell = 0.25\ c/f$, where $c = 3 \times 10^8$ m/s and f is frequency in Hz.

5.7.3 Other electrical power feeder POEs. A main barrier transient suppression/ attenuation device shall be provided on each penetrating conductor of electrical power feeder POEs that supply internal power to equipment outside the electromagnetic barrier. As a design objective, internal power should be supplied only to MCS outside the electromagnetic barrier. Nonessential equipment outside the barrier should be powered from an external source.

5.7.3.1 Electrical power main barrier POE protective device requirements for unrestricted lines. A Norton source, with a 2500-A short-circuit current, ≤ 20-ns risetime and 500-550-ns FWHM, and source impedance ≥ 60 Ω, connected to a penetrating conductor at the main barrier POE protective device external terminal, shall produce a residual internal transient stress no greater than 10 A and shall not cause device damage or performance degradation.[4] Intermediate and long pulse performance requirements for an intrasite power line POE protective device shall be determined by coupling analyses when the length of the exposed line exceeds 200 m. If a main barrier POE protective device cannot be designed to satisfy the residual internal stress limits without interfering with operational signals that it is required to pass, a special protective volume shall be established (see 5.8.3.2).

Downloaded from http://www.everyspec.com

5.7.3.2 Electrical power main barrier POE protective device requirements for restricted lines. Reduced performance requirements apply to POE protective devices for restricted intrasite power lines that satisfy the following criteria:

a. The exposed external section of the power line is less than 5 m (16.4 ft) in length

b. The external equipment connected to the power line is physically small, less than 2 m (5.1 ft) in its largest dimension

c. The external equipment is not connected to other electrical conductors (except ground conductors) or metal pipes; it is either ungrounded or grounded directly to the facility HEMP shield.

The Norton source parameters for restricted intrasite power lines are $800/\sqrt{N}$ or 500-A short-circuit current (where N is the number of conductors in the cable and the larger amplitude is chosen), ≤ 20-ns risetime, 500-550-ns FWHM, and ≥ 60-Ω source impedance[4]. The residual internal transient limits and functional requirements for restricted lines are the same as those for unrestricted lines. If a main barrier POE protective device cannot be designed to satisfy the residual internal stress limits without interfering with operational signals that it is required to pass, a special protective volume shall be established (see 5.8.3.2).

5.7.4 Audio and data line POEs.

5.7.4.1 Standard audio and data lines. All standard voice and data lines, whether shielded or unshielded, shall be converted to fiber optics outside the electromagnetic barrier and shall penetrate the facility HEMP shield on all-dielectric fiber optic cables. Optoelectronic equipment outside the electromagnetic barrier shall be protected using special protective measures (see 5.8.1), if the associated audio or data line is mission critical. The fiber optic cable POE shall be protected with a waveguide-below-cutoff protective device.

The inside diameter of a fiber optic WBC shall be limited such that the waveguide cutoff frequency is at least 1.5 GHz. The length of the waveguide shall be sufficient to provide at least 80 dB attenuation at 1 GHz. No conductors or conducting fluids shall be permitted to pass through the waveguide; the waveguide-below-cutoff protective device shall be filled or its ends shall be capped to prevent inadvertent insertion of conductors.

5.7.4.2 Nonstandard audio and data lines. A main barrier transient suppression/ attenuation device shall be provided on each penetrating conductor of shielded or unshielded nonstandard audio or data lines that cannot be practically converted to fiber optics. As a design objective, a maximum of 20 such nonstandard audio or data lines should be allowed to penetrate the facility HEMP shield.

Downloaded from http://www.everyspec.com

5.7.4.2.1 Nonstandard audio and data main barrier POE protective device requirements. A Norton source, with a $5000/\sqrt{N}$ or 500-A short-circuit current (where N is the number of penetrating conductors in the audio or data cable and the larger amplitude is chosen), ≤ 20-ns risetime and 500-550-ns FWHM, and source impedance ≥ 60 Ω, connected to a penetrating conductor at the main barrier POE protective device external terminal, shall produce a residual internal transient stress no greater than 0.1 A and shall not cause device damage or performance degradation.[4] A Norton source, with a 250-A short-circuit current, ≤ 1.5-µs risetime and 3-5-ms FWHM, and source impedance ≥ 10 Ω, connected at the main barrier POE protective device external terminal, shall not cause device damage or performance degradation.[4] A Norton source, with a 1000-A short-circuit current, ≤ 0.2-s risetime and 20-25-s FWHM, and source impedance ≥ 5 Ω, connected at the main barrier POE protective device external terminal[5], shall not cause device damage or performance degradation.[4] If a main barrier POE protective device cannot be designed to satisfy the residual internal transient stress limits without interfering with operational signals it is required to pass, a special protective volume shall be established (see 5.8.3.2).

5.7.5 Electrical control and signal line POEs. A main barrier transient suppression/ attenuation device shall be provided on each penetrating conductor of electrical control and signal lines, whether shielded or unshielded. As a design objective, the number of control and signal lines penetrating the facility HEMP shield should be minimized. Nonmetallic fiber optic lines do not require a transient suppression/attenuation device at the barrier.

5.7.5.1 Main barrier POE protective device requirements for unrestricted control and signal lines operating at voltages less than 90 V. A Norton source, with a $5000/\sqrt{N}$ or 500-A short-circuit current (where N is the number of penetrating conductors in the control or signal cable and the larger amplitude is chosen), ≤ 20-ns risetime and 500-550-ns FWHM, and source impedance ≥ 60 Ω, connected to a penetrating conductor at the main barrier POE protective device external terminal, shall produce a residual internal transient stress no greater than 0.1 A and shall not cause device damage or performance degradation.[4] Intermediate and long pulse performance requirements for an intrasite control and signal line POE protective device shall be determined by coupling analyses when the length of the exposed line exceeds 200 m. If a main barrier POE protective device cannot be designed to satisfy the residual internal transient stress limits without interfering with operational signals it is required to pass, a special protective volume shall be established (see 5.8.3.2).

5.7.5.2 Main barrier POE protective device requirements for unrestricted control and signal lines operating at voltages greater than 90 V. A Norton source, with a $5000/\sqrt{N}$ or 500-A short-circuit current (where N is the number of penetrating conductors in the control or signal cable and the larger amplitude is chosen), ≤ 20-ns risetime and 500-550-ns FWHM, and source impedance ≥ 60 Ω, connected to a penetrating conductor at the main barrier POE protective device external terminal, shall produce a residual internal transient stress no greater than 1 A and shall not cause device damage or performance degradation.[4] Intermediate and long pulse performance requirements for an intrasite control and signal line POE protective

Downloaded from http://www.everyspec.com

device shall be determined by coupling analyses when the length of the exposed line exceeds 200 m. If a main barrier POE protective device cannot be designed to satisfy the residual internal transient stress limits without interfering with operational signals it is required to pass, a special protective volume shall be established (see 5.8.3.2).

5.7.5.3 Main barrier POE protective device requirements for restricted control and signal lines. Reduced performance requirements apply to POE protective devices for restricted intrasite control and signal lines that satisfy the following criteria:

a. The exposed external section of the control or signal line is less than 5 m (16.4 ft) in length

b. The external equipment connected to the control or signal line is physically small, less than 2 m (5.1 ft) in its largest dimension

c. The external equipment is not connected to other electrical conductors (except ground conductors) or metal pipes; it is either ungrounded or grounded directly to the facility HEMP shield.

The Norton source parameters for restricted intrasite control and signal lines are $800/\sqrt{N}$ or 500-A short-circuit current (where N is the number of conductors in the cable and the larger amplitude is chosen), ≤ 20-ns risetime, 500-550-ns FWHM, and ≥ 60-Ω source impedance.[4] The residual internal transient limits and functional requirements for restricted lines are the same as those for unrestricted lines. If a main barrier POE protective device cannot be designed to satisfy the residual internal stress limits without interfering with operational signals that it is required to pass, a special protective volume shall be established (see 5.8.3.2).

5.7.6 RF communications antenna line POEs. A main barrier transient suppression/ attenuation device shall be provided on the signal-carrying conductor of each penetrating RF communications antenna line. The antenna cable shield shall be circumferentially bonded to the facility HEMP shield at the POE.

5.7.6.1 Antenna line POE protective device requirements.

5.7.6.1.1 Signal conductor injection for receive-only antennas. Pulses of the prescribed waveforms and amplitudes, occurring on the signal-carrying conductor at the antenna terminals of a receive-only antenna subsystem, shall produce residual internal transient stresses no greater than 0.1 A on the signal-carrying conductor and shield and shall not cause device damage or performance degradation.[4] An antenna protective device may be used in conjunction with the main barrier POE protective device to achieve the required transient suppression/attenuation. The waveforms and amplitudes of the pulses to be applied shall be determined by threat extrapolation of coupling measurements. Coupling measurements shall be acquired using CW immersion or another threat-relatable method. Coupling and PCI test

Downloaded from http://www.everyspec.com

details are provided in Appendix B. If the antenna subsystem protection cannot be designed to satisfy the residual internal transient stress limits without interfering with operational signals it is required to pass, a special protective volume shall be established (see 5.8.3.2).

5.7.6.1.2 Signal conductor injection for transmit antennas. Pulses of the prescribed waveforms and amplitudes, occurring on the signal-carrying conductor at the antenna terminals of a transmit-only or transceive antenna subsystem, shall produce residual internal transient stresses no greater than 1 A on the signal-carrying conductor[6] and 0.1 A on the shield and shall not cause device damage or performance degradation[4]. An antenna protective device may be used in conjunction with the main barrier POE protective device to achieve the required transient suppression/attenuation. The waveforms and amplitudes of the pulses to be applied shall be determined by threat extrapolation of coupling measurements. Coupling measurements shall be acquired using CW immersion or another threat-relatable method. Coupling and PCI test details are provided in Appendix B. If the antenna subsystem protection cannot be designed to satisfy the residual internal transient stress limits without interfering with operational signals it is required to pass, a special protective volume shall be established (see 5.8.3.2).

5.7.6.1.3 Shield injection. A Norton source, with an 800-A short-circuit current, ≤ 20-ns risetime and 500-550-ns FWHM, and source impedance ≥ 60 Ω, connected to the shield of a buried antenna cable at a point outside the electromagnetic barrier, shall produce residual internal transient stresses no greater than 0.1 A on the signal-carrying conductor and shield and shall not cause POE protective device damage or performance degradation.[4] For a nonburied antenna cable, a Norton source, with a 5000-A short-circuit current, ≤ 20-ns risetime and 500–550-ns FWHM, and source impedance ≥ 60 Ω, connected to the shield at a point outside the barrier, shall produce residual internal transient stresses no greater than 0.1 A on the signal-carrying conductor and shield and shall not cause POE protective device damage or performance degradation.[4] An antenna cable is considered buried when less than 1 m (3.3 ft) of its total length is not covered by earth or concrete fill and it terminates at a buried antenna. The cable is considered nonburied if at least 1 m (3.3 ft) of its total length is not covered or it terminates at an aboveground antenna.

5.7.7 Conduit shielding.

5.7.7.1 HEMP protection using conduit shielding. HEMP protection for cable runs between two protected volumes may be provided using continuous conduit shielding when the lengths of the runs do not exceed the applicable maximums in table II. Main barrier transient

[6] It may be difficult to design main barrier POE and antenna protective devices that can achieve the residual requirement of 1 A for an RF transmit-only or transceiver signal-carrying conductor. Therefore, RF transmitters or transceivers may require placement in special protective volumes (see 5.8.3.2).

Downloaded from http://www.everyspec.com

TABLE II. Maximum conduit length as a function of conduit outside diameter (OD).

Type of Cable Run and Conduit	Maximum Conduit Length (m)		
	5 cm ≤ OD < 10 cm	10 cm ≤ OD < 15 cm	15 cm ≤ OD
Signal and Low Current Power Lines			
Buried Conduit	37	75	112
Nonburied Conduit	6	12	18
Medium Current Power Lines			
Buried Conduit	200	600	1120
Nonburied Conduit	60	120	180
High Current Power Lines			
Buried Conduit	200	600	1,200
Nonburied Conduit	200	600	1,200

suppression/attenuation devices are not required on the penetrating conductors under these conditions.

Any cable run containing one (or more) control or signal conductors is considered to be a signal line. A power cable run containing one or more conductors with maximum operating currents less than 1.0 A is a low current power line. A power cable run in which the maximum operating current on the lowest rated conductor is between 1.0 A and 10 A is a medium current power line. A power cable run containing only power lines with operating currents greater than 10 A is a high current power line. A conduit is considered buried when less than 1 m (3.3 ft) of its total length is not covered by earth or concrete fill; it is nonburied if 1 m (3.3 ft) or more of the total conduit length is not covered.

5.7.7.2 Conduit requirements. HEMP protection conduits shall be rigid metal conduit, with circumferentially welded, brazed, or threaded closures at all joints and couplings, pull boxes, and penetrations through the facility HEMP shields at both ends. A Norton source, with an 800-A short-circuit current on a buried signal or low current power line conduit and a 5000-A short-circuit current on a nonburied signal or low current power line conduit, ≤ 20 ns risetime and 500-550-ns FWHM, and source impedance ≥ 60 Ω, shall produce a residual internal transient stress no greater than 0.1 A on the wire bundle inside the conduit.[4] The same sources connected on the outer surface of a medium or high current power line conduit shall produce a residual internal transient stress no greater than 10 A, when the operating current on the lowest rated conductor in the wire bundle inside the conduit is greater than 10 A, and no greater than 1.0 A when the operating current is between 1.0 A and 10 A.[4]

Downloaded from http://www.everyspec.com

5.7.8 Acceptance testing of main barrier electrical POE protective devices. Acceptance testing of main barrier electrical POE protective devices shall be conducted using the pulsed current injection test procedures of Appendix B. All defects found during the acceptance testing shall be corrected, retested, and shown to provide the required performance.

5.8 Special protective measures. In special cases where HEMP hardness cannot be achieved with the electromagnetic barrier alone (see 4.3.4), special protective measures shall be implemented. Special protective measures shall not be used as a substitute for an elector-magnetic barrier that satisfies the performance requirements of this standard.

5.8.1 MCS outside the main electromagnetic barrier. Special protective measures shall be implemented to HEMP harden MCS that are placed outside the electromagnetic barrier IAW provisions of this standard (see 5.1.1). Special protective measures for MCS outside the main barrier may include:

a. Cable, conduit, and local volume shielding.

b. Linear and nonlinear transient suppression/attenuation devices.

c. Equipment-level hardening (reduced coupling cross-section, dielectric means of signal and power transport, use of inherently robust components).

d. Remoting sensitive circuits to locations within the protected volume.

e. Automatic recycling features or operator intervention schemes, when the mission timeline permits.

f. Other hardening measures appropriate for the particular equipment to be protected.

Performance requirements for the special protective measures shall ensure that the upper-bound HEMP-induced peak time-domain current stresses at the equipment level are less than the vulnerability thresholds of the equipment.[7]

5.8.1.1 RF communications antennas outside the main electromagnetic barrier. Mission-critical RF antennas and any associated antenna-mounted electronics, tuning circuits, and antenna cables located outside the main electromagnetic barrier shall be treated as MCS that are placed outside the electromagnetic barrier. Performance requirements for the HEMP protection shall ensure that the upper-bound HEMP-induced peak time-domain current stresses at the antenna feed are less than the vulnerability thresholds of the MCS located outside the barrier.[7]

---

[7] See MIL-HDBK-423 for methods to determine the upper-bound HEMP stresses and vulnerability thresholds.

Downloaded from http://www.everyspec.com

5.8.2 MCS inside the main electromagnetic barrier. Special protective measures shall be implemented to HEMP harden MCS that are within the main electromagnetic barrier, but experience mission-aborting damage or upset during verification testing. Special protective measures for MCS inside the barrier may include cable, conduit, and volume shielding; transient suppression/attenuation devices; equipment-level hardening; remoting sensitive circuits; automatic recycling; operator intervention features; and other hardening measures appropriate for the particular equipment to be protected. Performance requirements for the special protective measures shall ensure that the upper-bound HEMP-induced peak time-domain current stresses at the equipment level are less than the vulnerability thresholds of the equipment.[7]

5.8.3 Special protective volumes.

5.8.3.1 Special protective volumes for piping POEs. When a piping POE waveguide below cutoff must be larger than the dimension corresponding to a cutoff frequency of at least 1.5 GHz to provide adequate fluid flow and a WBC array insert cannot be used, a special protective volume shall be established inside the electromagnetic barrier (figure 6a).

5.8.3.1.1 Special waveguide requirements. A WBC having a cutoff frequency less than 1.5 GHz shall be of the minimum inside diameter consistent with its functional requirements. The length of the waveguide section shall be at least five times the inside diameter. All joints and couplings in the waveguide section and the penetration through the HEMP shield at the POE shall be electromagnetically closed. No dielectric lining shall be permitted in the waveguide section.

5.8.3.1.2 Special protective barriers for piping POEs. A special protective barrier shall completely enclose piping which is protected at its POE with a waveguide below cutoff having a cutoff frequency less than 1.5 GHz. The special protective barrier may be a separate shield with protected penetrations, or it may be implemented using the metal walls of the piping system itself (figure 6a). Performance requirements for the special protective barrier shall ensure that the total shielding effectiveness, measured through the main electromagnetic barrier and special protective barrier, satisfies at least the minimum requirements shown on figure 1.

5.8.3.2 Special protective volumes for electrical POEs. When a main barrier protective device cannot be designed to achieve the transient suppression/attenuation performance prescribed for the class of electrical POE (see 5.7) without interfering with operational signals it is required to pass, a special protective volume shall be established inside the main electromagnetic barrier (figure 6b). The special protective volume shall be enclosed by a special protective barrier with primary and secondary special electrical POE protective devices as required to meet the performance requirements prescribed in this standard.

Downloaded from http://www.everyspec.com

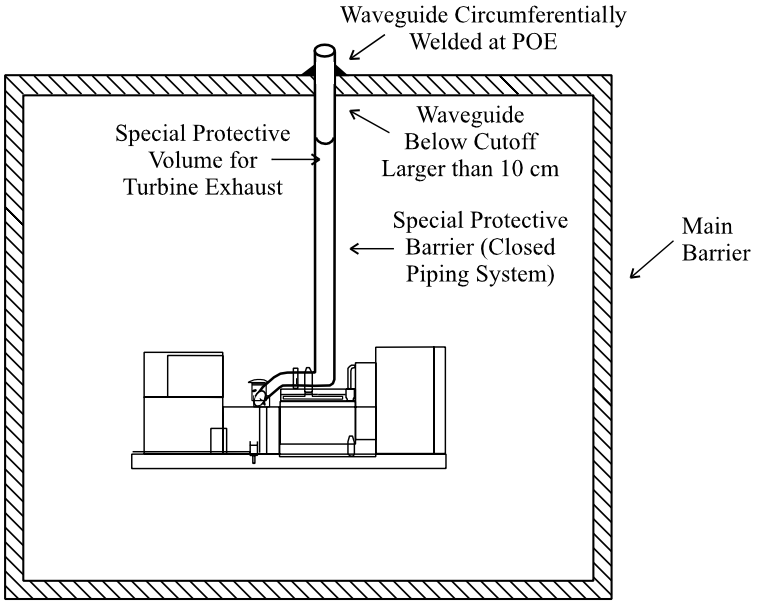

a. Special protective volume for piping POE.

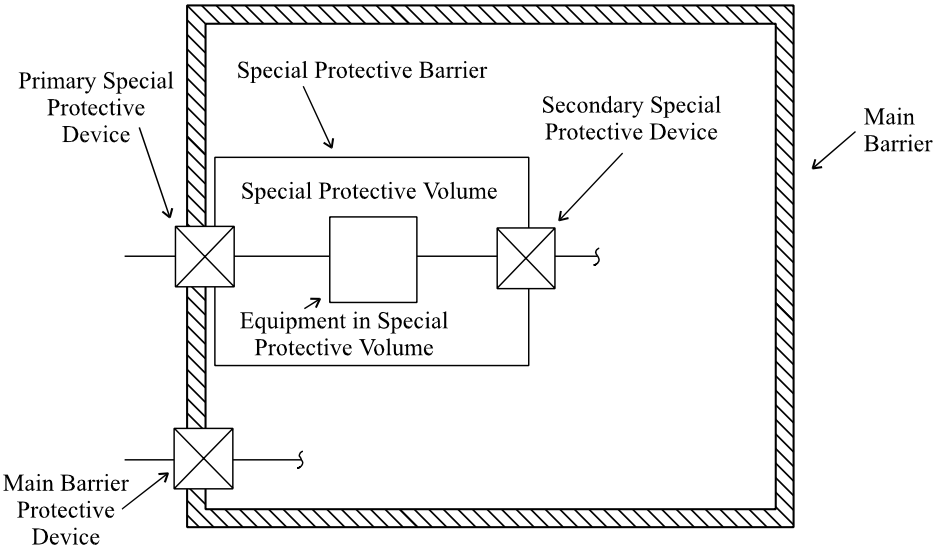

b. Special protective volume for electrical equipment.

FIGURE 6. Typical special protective volumes.

Downloaded from http://www.everyspec.com

5.8.3.2.1 Special protective barriers for electrical POEs. A special protective barrier shall completely enclose wiring and equipment directly connected to a primary special electrical POE protective device. The special protective barrier may be a separate shield, or it may be implemented using cable and conduit shields and equipment cabinets. Performance requirements for the special protective barrier shall ensure that the total shielding effectiveness, measured through the main electromagnetic barrier and special protective barrier, satisfies at least the minimum requirements shown on figure 1.

5.8.3.2.2 Primary special electrical POE protective device requirements. A primary special electrical POE protective device shall be substituted for a main barrier electrical POE protective device that cannot achieve the prescribed transient suppression/attenuation performance (see 5.7) without interfering with the operational signals it is required to pass. The primary special protective device shall be designed to provide the maximum transient suppression/attenuation consistent with its functional requirements. A Norton source with pulse parameters prescribed for the applicable class of electrical POE (see table I), connected to the penetrating conductor at the primary special POE protective device external terminal, shall produce a residual internal transient stress no greater than its design value and shall not cause device damage or performance degradation.[4]

5.8.3.2.3 Secondary special electrical POE protective device requirements. When the combination of the primary special electrical POE protective device and the directly connected equipment cannot be designed to achieve the transient suppression/attenuation performance prescribed for the class of electrical POE (see 5.7), a secondary special electrical POE protective device shall be used (figure 6b). The secondary special electrical POE protective device shall be designed so that the total transient suppression/attenuation, measured through the primary special protective device, the connected equipment, and the secondary special protective device, satisfies at least the minimum requirements prescribed for the class of POE without device damage or performance degradation.[4]

5.8.3.2.4 MCS in a special protective volume. Special protective measures shall be implemented as necessary to harden MCS in a special protective volume to the HEMP-induced stresses that will occur in that volume. Special protective measures for MCS in a special protective volume may include cable, conduit, and volume shielding; transient suppression/ attenuation devices; equipment-level hardening; remoting sensitive circuits; automatic recycling; operator intervention features; and other hardening measures appropriate for the particular equipment to be protected. Performance requirements for the special protective measures shall ensure that the upper-bound HEMP-induced peak time-domain current stresses at the equipment level are less than the vulnerability thresholds for the equipment.[7]

5.8.4 Acceptance testing for special protective measures.

5.8.4.1 Special protective measures for MCS. Acceptance testing is not required for equipment-level special protective measures installed on MCS IAW with 5.8.1, 5.8.2, and

Downloaded from http://www.everyspec.com

5.8.3.2.4. HEMP hardness provided by these special protective measures shall be demonstrated during the verification test program.

5.8.4.2 Special protective barriers. Acceptance testing for all special protective barriers shall be conducted using shielding effectiveness test procedures of Appendix A. Additionally, acceptance testing for all primary and secondary special electrical POE protective devices shall be conducted using PCI test procedures of Appendix B. All defects found during the acceptance testing shall be corrected, retested, and shown to provide the required performance.

5.9 Reliability and maintainability. The HEMP protection subsystem shall be designed and constructed to be rugged, reliable, and maintainable. Reliability and maintainability program tasks and requirements shall be included in the facility acquisition specifications to ensure that reliability is considered in component selections; to reduce the frequency, complexity, and costs of design-dictated maintenance; and to provide adequate provisioning with spare HCIs and maintenance tools and supplies.

5.10 Safety and human engineering. Safety and human engineering criteria, principles, and practices shall be applied in the design, selection, and placement of HEMP protection subsystem elements. Entryways shall be designed to accommodate expected traffic, and shielded doors shall operate simply with operating forces within human engineering limits. Inspection covers shall be designed for safety and ease of removal and proper reinstallation. Electrical POE protective devices shall provide fail-safe features, such as capacitor discharge resistors, for protection of personnel during installation, operation, maintenance, and repair.

5.11 Testability. The HEMP protection subsystem shall be designed and constructed to accommodate quality assurance, acceptance, and verification testing, and HM/HS. The facility shield shall be accessible for visual inspection at all POEs. Access for periodic shielding effectiveness measurements shall be provided, except on the floor shield of a bottom floor and on buried facilities. The built-in shield monitoring capability shall consist of a permanently installed large loop or a permanently installed shield injection point system, as described in MIL-HDBK-423, or other exciter and sensor elements which will detect significant changes in the electromagnetic barrier performance. Electrical POE protective devices shall be installed with accessible PCI drive points and measurement points.

5.12 Corrosion control. Corrosion protection measures shall be implemented in the design and construction of the HEMP protection subsystem. The facility shield and POE protective devices shall be constructed with inherently corrosion-resistant materials or metals shall be coated or metallurgically processed to resist corrosion. Pockets where water or condensation can collect shall be avoided, and provision shall be made to inspect above the ceiling shield for roof leakage. Buried conduits or cables shall be coated with asphalt compound, plastic sheaths, or equivalent corrosion protection, and a means for detecting leakage shall be provided. Joints between dissimilar metals shall be avoided and, where

Downloaded from http://www.everyspec.com

required, shall be provided with corrosion preventive measures. Cathodic protection shall be provided, where required by environmental conditions.

5.13 Configuration management. A hardness configuration management program shall be implemented during design and construction of the HEMP protection subsystem. Hardness critical items and hardness critical processes shall be identified in the facility drawings IAW MIL-STD-100, and installed hardness critical items shall be distinctively marked with DD Forms 2639, Hardness Critical Labels, or DD Forms 2640, Hardness Critical Tags, as appropriate. Facility design and installation changes shall be assessed for potential HEMP hardness impacts prior to approval. The affected portions of the HEMP protection subsystem shall be retested when major configuration changes occur after acceptance testing.

5.14 Verification testing. After the HEMP protection system has been accepted and facility equipment is installed and operational, a verification test program shall be conducted. As a minimum, verification testing shall include CW immersion testing of the electromagnetic barrier, PCI tests at electrical POEs, and additional site-specific tests as needed to demonstrate effectiveness of special protective measures. All deficiencies identified by the verification test program shall be corrected and retested until the required hardness is achieved.

5.14.1 CW immersion testing. CW immersion testing shall be performed IAW procedures of Appendix C. At frequencies where the measurement dynamic range exceeds the attenuation required by figure 1, ratios of illuminating field strength to the internal field measurements shall be equal to or greater than the minimum shielding effectiveness requirement. Internal field measurements shall be below the instrumentation noise or operating signal level in frequency bands where measurement dynamic range is less than attenuation requirements of figure 1. Internal current measurements, when extrapolated to threat using equations defined in Appendix C, shall be $\leq$ 0.1 A, and the peak derivatives of the threat-extrapolated currents shall be $\leq 1 \times 10^7$ A/s. No interference with mission-critical communications-electronics or support equipment shall occur.

When approved by the sponsoring agency for the verification test, a thorough program of shielding effectiveness measurements using procedures of Appendix A and a thorough SELDS survey IAW MIL-HDBK-423 guidance may be performed in lieu of the CW immersion test.

5.14.2 PCI verification testing. PCI verification testing shall be performed IAW procedures of Appendix B. Norms of the measured residual internal transient currents shall not exceed maximum limits for the applicable classes of electrical POEs. POE protective devices shall not be damaged or experience unacceptable performance degradation from the PCI excitations. No time-urgent, mission-aborting damage or upsets of MCS shall occur.[8]

[8]The determination whether an observed interruption or upset is mission-aborting is the responsibility of the operational authority for the facility.

Downloaded from http://www.everyspec.com

5.14.3 Verification for special protective measures. Site-specific procedures for verification of special protective measures shall be developed based upon test approaches of 5.14.3.1 and 5.14.3.2. The verification testing shall demonstrate that HEMP-induced electromagnetic stresses resulting from facility exposure to the threat environment of MIL-STD-2169 will not cause time-urgent, mission-aborting damage or upsets.[8]

5.14.3.1 Verification of special protective measures for MCS. Verification testing for MCS hardened with special protective measures shall generally include coupling measurements and PCI procedures. The coupling test shall be threat-relatable, such as by pulsed field illumination, PCI, or CW immersion (see Appendix C). MCS cable currents shall be measured and extrapolated to the upper-bound HEMP-induced response for the MIL-STD-2169 threat environment. The extrapolation shall include a factor of 10 to account for uncontrollable coupling parameters, such as departure from planarity and ground conductivity, and other uncertainties. The upper-bound HEMP-induced currents shall then be used as the drive levels for the pulsed current injection testing.

Long conductors that connect to the MCS and are directly exposed to the HEMP environment shall be PCI tested with injected pulses of the amplitudes and waveforms prescribed in Appendix B.

Cables that connect or are internal to the MCS and are not directly exposed shall also be PCI tested. The injected pulse characteristics shall comply with one of the following requirements:

a. Amplitudes equal to the upper-bound, HEMP-induced peak time-domain current stresses, and waveforms similar to those of the applicable threat-extrapolated currents.

b. Amplitudes and waveforms prescribed in Appendix B for the applicable classes of electrical circuits.

These verification test excitations shall not cause time-urgent, mission-aborting damage or upset of MCS.[8]

5.14.3.2 Verification of special protective barriers. Verification of special protective barriers shall include barrier attenuation measurements during CW immersion testing and PCI testing of all primary and secondary special electrical POE protective devices. Amplitudes and waveforms of the injected pulses shall be as prescribed in Appendix B. In addition to functional observations and measurements required by 5.14.3.1, residual internal stresses shall be measured on conductors that penetrate from the special protective volume into the protected volume. Norms of responses measured at test points within the protected volume shall not exceed maximum allowable limits, and the test excitations shall not cause time-urgent, mission-aborting damage or upset of MCS.[8]

Downloaded from http://www.everyspec.com

5.15 HM/HS program requirements. Logistics support analysis for the HEMP protection subsystem shall be performed during the facility acquisition phase. The logistics support analysis shall define the HEMP protection subsystem HM/HS requirements, supply support requirements, training requirements, and technical data requirements.

5.15.1 HS/reverification test procedures. Detailed HS/reverification test procedures for the HEMP protection subsystem shall be developed and used. The HS tasks shall be performed on a periodic basis as described in the HM/HS program. The reverification test results shall be correlatable to verification test results and shall have the same pass/fail criteria. The procedures shall identify the tests to be performed, test equipment requirements, safety precautions, and other relevant information.

5.15.2 Maintenance and inspection procedures. Detailed procedures for preventive maintenance and inspection and for repair and replacement of HEMP hardness critical assemblies or items shall be provided. Preventive maintenance and inspection procedures shall be designed to be implemented at the organizational maintenance level and shall identify the tasks to be performed, frequency of performance, pass/fail criteria where applicable, safety precautions, and other relevant information. Repair and replacement procedures shall identify the tasks to be performed, hardness requirements including pass/fail criteria, safety precautions, and other relevant information.

5.15.3 Supply support requirements. A parts list of the installed HEMP hardness critical assemblies or items and lists of recommended organizational HEMP protection subsystem spare parts, repair parts, supplies, special tools, and special test equipment shall be provided. The lists shall identify the nomenclature or description of each item, the manufacturer and manufacturer's part number, the federal stock number when assigned, the required quantity, and other relevant information. All spare hardness critical assemblies, items, and cables shall be identified using either DD Forms 2639, Hardness Critical Labels, or DD Forms 2640, Hardness Critical Tags, as appropriate.

5.15.4 Training requirements. Training requirements for personnel assigned to a HEMP-hardened facility shall be defined. As a minimum, the training program shall include organizational HEMP awareness training for all site personnel and classroom and on-the-job training for HM/HS maintenance personnel. Training materials shall be provided for all training to be administered at the organizational level.

5.15.5 Technical data. A HEMP protection subsystem technical manual shall be provided. As a minimum, the technical manual shall include the following:

a. HEMP protection subsystem description and principles of operation.

b. Maintenance and inspection procedures, repair and replacement procedures, and hardness surveillance test procedures.

Downloaded from http://www.everyspec.com

c. Supply support requirements.

d. Training requirements.

5.15.6 Delivery. The HEMP protection subsystem technical manual shall be delivered with the facility. Recommended organizational HEMP spare parts, repair parts, supplies, special tools, special test equipment, and training materials shall also be delivered with the facility.

5.15.7 Implementation. HEMP protection subsystem preventive maintenance, inspection, and HS/reverification testing shall be performed IAW the technical manual. Corrective maintenance shall be performed if the HEMP protection subsystem performance degrades below the minimum requirements of this standard. HS/reverification testing shall be performed at intervals not exceeding seven years.

Downloaded from http://www.everyspec.com

6. NOTES

(This section contains information of a general or explanatory nature that may be helpful, but is not mandatory.)

6.1 Intended use. The standard contains minimum requirements and design objectives for low-risk HEMP protection of fixed ground-based facilities that perform critical, time-urgent C^4I missions. The purpose is to standardize design, construction, and test of HEMP protection subsystems for these facilities and to thereby ensure the quality and durability of the protection.

Low-risk HEMP protection is military unique because it is required only for critical C^4I assets that support time-urgent attack warning and retaliatory military missions. While other military and commercial systems may require HEMP protection, there are no commercial requirements for low-risk hardening.

6.2 Issue of DoDISS. When this standard is used in acquisition, the applicable issue of the DoDISS must be cited in the solicitation (see 2.2.1 and 2.3).

6.3 Subject term (key word) listing.

Continuous wave immersion
Electromagnetic barrier
Electric surge arrester
Facility HEMP shield
Hardening
Hardness verification
High-altitude electromagnetic pulse
Low-risk HEMP protection
Mission-critical systems
Nuclear survivability
POE
POE protective device
Pulsed current injection
Shielding effectiveness
Special protective measures
Survivability/vulnerability
Transient suppression/attenuation device
Waveguide below cutoff

6.4 Changes from previous issue. The margins of this standard are marked with vertical lines to indicate where substantive technical changes from the previous issue were made. This was done as a convenience only, and the Government assumes no liability whatsoever for any

Downloaded from http://www.everyspec.com

inaccuracies in these notations. Bidders and contractors are cautioned to evaluate the requirements of this document based on the entire content, irrespective of the marginal notations and relationship to the last previous issue.

Downloaded from http://www.everyspec.com

APPENDIX A

SHIELDING EFFECTIVENESS (SE) TEST PROCEDURES

A.1 GENERAL

A.1.1 Scope. This Appendix is a mandatory part of this standard. The information contained herein is intended for compliance. This Appendix establishes procedures for measuring the shielding effectiveness of the electromagnetic barrier required for low-risk HEMP protection of ground-based facilities with critical, time-urgent missions. The procedures are applicable for testing other HEMP-hardened facilities, when specified by the procurement documentation.

A.1.2 Applications. These procedures shall be used for shielding effectiveness acceptance testing of the facility HEMP shield and aperture POE protective treatments. The procedures shall also be performed for acceptance of repairs or installations of new POE protective devices after construction acceptance, except that only areas affected by the repair or installation are required to be tested. Shielding effectiveness measurements may also be conducted as part of the verification test program.

A.2 REFERENCED DOCUMENTS

A.2.1 Government documents. The following documents form a part of this Appendix to the extent specified:

DI-NUOR-80928	–	Nuclear Survivability Test Plan
DI-NUOR-80929A	–	Nuclear Survivability Test Report
DNA-EMP-1	–	Electromagnetic Pulse (EMP) Security Classification Guide (U) (document is classified S-RD)

(Copies of documents required by contractors in connection with specific acquisition functions should be obtained from the contracting activity or as directed by the contracting officer.)

A.2.2 Non-Government publications. The following documents form a part of this Appendix to the extent specified:

IEEE-Std-299	–	Standard for Measuring the Effectiveness of Electromagnetic Shielding Enclosures
IEEE-Std-488.1	–	Standard Digital Interface for Programmable Instrumentation

Downloaded from http://www.everyspec.com

APPENDIX A

(Applications for copies should be addressed to the Institute for Electrical and Electronics Engineers [IEEE], 445 Hoes Lane, Post Office Box 1331, Piscataway NJ 08855-1331.)

A.3 DEFINITIONS

A.3.1 Test area (or test point) shielding effectiveness. For the purposes of this procedure, the frequency-dependent ratio, expressed in decibels (dB), of the received signal when the receiving antenna is illuminated by electromagnetic radiation in the test calibration configuration (no shield present) to the received signal through the electromagnetic barrier in the test measurement configuration. Assuming that antenna voltage proportional to field strength is detected:

$$\mathrm{SE} = 20 \log \left(\frac{V_c}{V_m} \right)$$

where V_m is the measured signal at the test area (or test point), V_c is the calibration signal at the same frequency and transmitting antenna polarization, and corrections are applied for any differences in instrumentation system gain/attenuation between the calibration and measurement configurations. Shielding effectiveness values are test method-dependent, and different values may be obtained when time-domain or other frequency-domain measurement techniques are used.

A.4 GENERAL REQUIREMENTS

A.4.1 General. This HEMP shielding effectiveness test method is similar to IEEE-Std-299, except that the requirements have been modified to evaluate the barrier performance with a stepped-frequency measurement technique using a minimum set of test areas and test points. A transmitting antenna is placed on one side of the electromagnetic barrier on the measurement axis through the center of each test area (or test point). The receiving antenna is centered on the test area (or test point) at the opposite side of the barrier. The instrumentation is then stepped through the measurement frequencies, and the measured data are recorded. Magnetic field shielding effectiveness measurements are made at frequencies from 10 kHz through 20 MHz. Resonant range/plane wave shielding effectiveness is measured from 20 MHz through 1 GHz. Selection of test areas and test points, test frequencies, and polarizations of the transmitting antennas are defined in this Appendix.

A.4.2 Purpose. These procedures define shielding effectiveness, as used in this standard. The purpose of the measurements is to obtain shielding effectiveness data for demonstrating compliance with facility HEMP shield and aperture POE treatment performance requirements.

Downloaded from http://www.everyspec.com

A.4.3 HEMP protection subsystem test configuration. The shielding effectiveness acceptance test shall be conducted near the conclusion of the construction contract, when the following prerequisite conditions are met. The facility shield assembly shall be completed. All POEs and their POE protective devices, required as part of the construction work, shall be installed and in a normal operating condition. Internal and external wiring to conductive POE protective devices, if provided under the construction contract, shall be in place and connected. Penetrating fiber optic cables, if provided under the construction contract, shall be installed. All interior equipment and finish work under the construction contract shall be completed. Installed equipment may be either operating or nonoperating. A visual shield inspection shall be performed before starting the measurements to assure that these configuration requirements have been met.

When these shielding effectiveness measurements are conducted as part of the verification test program, the facility shall be in a normal operating configuration and shall be performing actual or simulated mission functions. The HEMP protection subsystem shall be intact.

A.4.4 Analysis requirements. There are no pretest or post-test analyses required for these procedures.

A.4.5 Test equipment requirements. Antennas and other test equipment required for shielding effectiveness measurements are identified in table A-I. A typical instrumentation system is illustrated in figure A-1.

A.4.6 Operational impact analysis and risk. Since the electromagnetic barrier must remain intact during conduct of the shielding effectiveness measurement sequence and use of electrically noisy equipment must be restricted, construction activity or unusual operations (facility modification, maintenance) may be affected. Radiated signal levels are low and present no hazard to equipment, but frequency adjustments may be required to avoid self-interference or interference with nearby facilities. Normal electrical safety precautions apply.

A.4.7 Test plan and procedures. A shielding effectiveness test plan and detailed test procedures shall be prepared. These may be combined in a single document, or two separate documents may be used. As a minimum, the documentation shall contain the following information:

a. A statement of test objectives.

b. Facility identification and description.

Downloaded from http://www.everyspec.com

APPENDIX A

TABLE A-I. Shielding effectiveness test equipment requirements.

Equipment	Characteristics
Oscillators[1]	10 kHz – 1 GHz
Power Amplifiers	10 kHz – 1 GHz; power output as required for dynamic range
Preamplifiers	10 kHz – 1 GHz; amplification and noise figure as required for dynamic range
Receivers, Network Analyzers, or Spectrum Analyzers	10 kHz – 1 GHz
Antenna Kit[2]	10 kHz – 1 GHz
Computer and GPIB Control Interfaces[3]	As required
Fiber Optic (F/O) Links[4]	As required
Miscellaneous Cables, Attenuators, and Coaxial Switches	As required

[1] Oscillators may be integral to the receivers/network or spectrum analyzers, and radio frequency (RF) signals may be transmitted through the shield with an appropriate fiber optic link or high-quality, solid metal-shielded coaxial cable.

[2] Electrostatically shielded loop antennas are required in the low-frequency or magnetic regime (10 kHz - 20 MHz). Biconical antennas shall be used in the resonant frequency range (20 MHz to approximately 100 MHz). Log periodic or equivalent broad band antennas shall be used in the high-frequency or plane wave regime (approximately 100 MHz to 1 GHz). Antennas must radiate and receive over the prescribed frequency bands and, in conjunction with other test equipment, must satisfy the dynamic range requirement.

[3] Use of a personal computer with an IEEE-488 general purpose interface bus (GPIB), or equivalent, to control instrumentation and store test data is strongly recommended.

[4] Use of fiber optic links for transmitting RF or control signals through the shield, as required, is strongly recommended.

Downloaded from http://www.everyspec.com

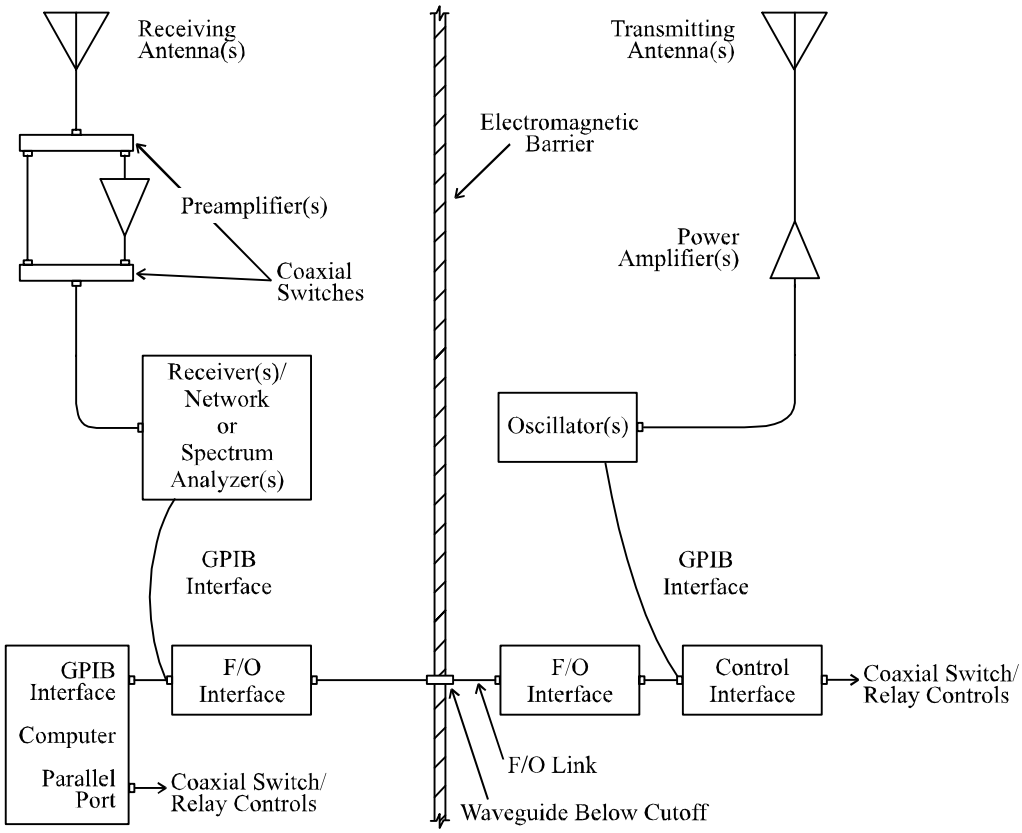

FIGURE A-1. Typical shielding effectiveness instrumentation system.

c. Test area identification. The entire surface (including the floor when both sides of the shield are accessible) of the electromagnetic barrier shall be divided into numbered plane areas not greater than 3.05 m × 3.05 m (10 ft × 10 ft), as illustrated by the example in figure A-2. The shielding effectiveness measurement axis (imaginary line between the transmitting antenna and receiving antenna locations) for each test area shall be normal to the shield surface and shall pass through the geometric center of the area. A list of POEs, by test area, shall be included.

d. Test point identification. Numbered test points shall be established at all architectural, mechanical, and electrical POEs. The measurement axes for test points shall be normal to the shield surface at the geometric centers of shielded doors, equipment access

Downloaded from http://www.everyspec.com

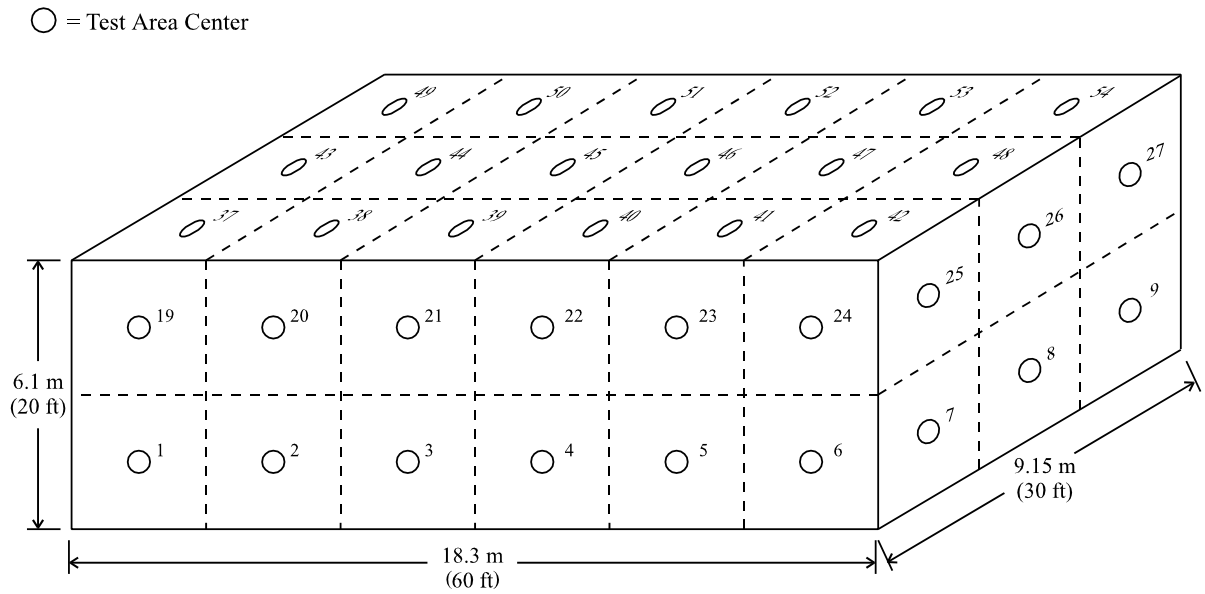

FIGURE A-2. Sample test area assignments.

panels, and ventilation waveguide-below-cutoff arrays and at the centerlines of penetrating pipes or conduits for piping and electrical POEs.

e. Identification of test frequencies.

f. Test equipment identification by manufacturer, model, and serial number.

g. Detailed measurement procedures.

h. Procedures for marking, repair, and retest of defects.

i. Any deviations from requirements of this Appendix.

j. Data management (including calibration and measurement data quality control procedures, data acceptability criteria, preservation of data records, and pass/fail criteria).

k. Safety, including electromagnetic radiation and electrical shock hazards.

Downloaded from http://www.everyspec.com

l. Security. (see A.4.9)

m. Test schedule (including priority of measurements).

Data item description DI-NUOR-80928, "Nuclear Survivability Test Plan," shall be used.

A.4.8 Test report requirements. A shielding effectiveness test report shall be prepared. As a minimum, the report shall contain the following information:

a. Facility identification and reference to the applicable test plan.

b. A discussion of any deviations from the test plan and requirements of this Appendix.

c. Test calibration and measurement data (figure A-3 illustrates a typical data graph).

d. Pass/fail conclusions.

Data item description DI-NUOR-80929A, "Nuclear Survivability Test Report," shall be used.

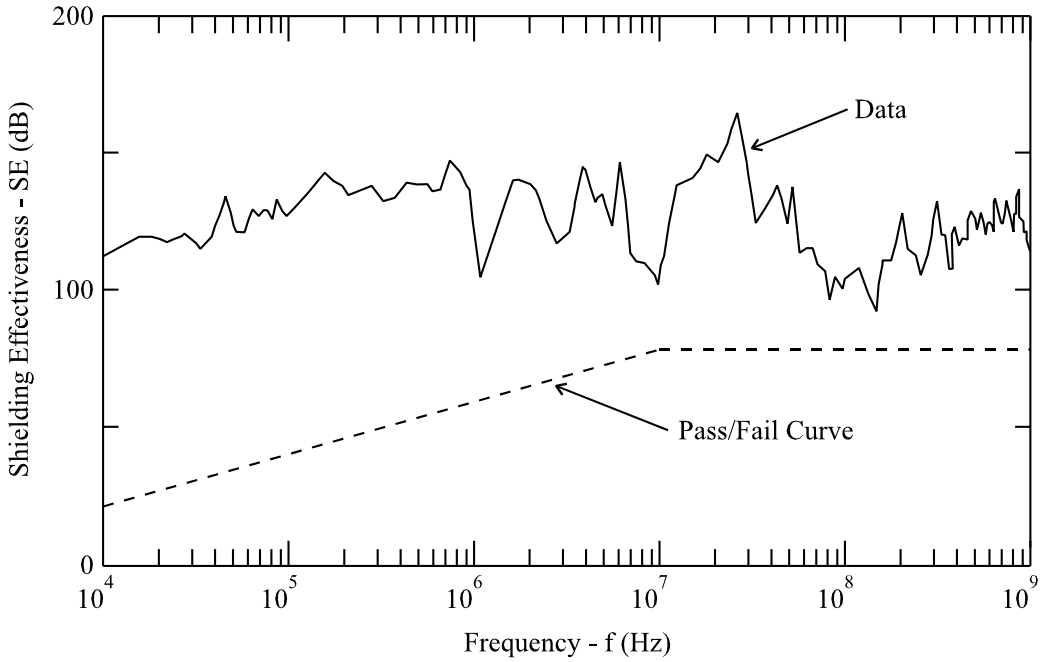

FIGURE A-3. Typical shielding effectiveness measurement record.

Downloaded from http://www.everyspec.com

A.4.9 Data classification. Test data may be classified. DNA-EMP-1 and the classification guide for the specific facility or system should be consulted for guidance.

A.5 DETAILED REQUIREMENTS

A.5.1 Data requirements. For each test area (see A.4.7c) and test point (see A.4.7d), shielding effectiveness measurements shall be made at test frequencies and for each of two transmitting and receiving antenna polarizations as follows:

a. Test frequencies – Test frequencies shall be spaced approximately logarithmically within each decade, with minimum sampling density as follows:

- 10 kHz – 100 kHz : 20 test frequencies
- 100 kHz – 1 MHz : 20 test frequencies
- 1 MHz – 10 MHz : 40 test frequencies
- 10 MHz – 100 MHz : 150 test frequencies
- 100 MHz – 1 GHz : 150 test frequencies

The spacing may be adjusted to avoid discrete system operating frequencies or noise spikes in the ambient electromagnetic environment.

b. Antenna polarizations – Planes of the magnetic loop antennas shall be normal to the test area surface in two orientations, at 90 degrees to each other and parallel to the principal seams in the shield. Dipoles of the biconical and log-periodic antennas shall be parallel to the test area surface in two orientations, at 90 degrees to each other and parallel to the principal seams.

A.5.2 Calibration procedure. Calibrations for all test frequencies and for both polarizations shall be performed IAW figure A-4. The transmitting and receiving magnetic antenna loops shall be in the same plane, and the distance between antennas, measured between the centers of the loops, shall be 3.05 (± 0.05) m (10 ft ± 2 in). Dipoles of the transmitting and receiving biconical and log-periodic antennas shall be parallel to each other, and the distance between antennas, measured between the feedpoint connections to the antenna elements, shall be 3.05 (± 0.05) m.

During calibration, no equipment or other electromagnetic reflectors (except ground) shall be closer to the antennas than three times the antenna separation. The antennas shall be 1.5–2 m (5–6.6 ft) above ground.

Downloaded from http://www.everyspec.com

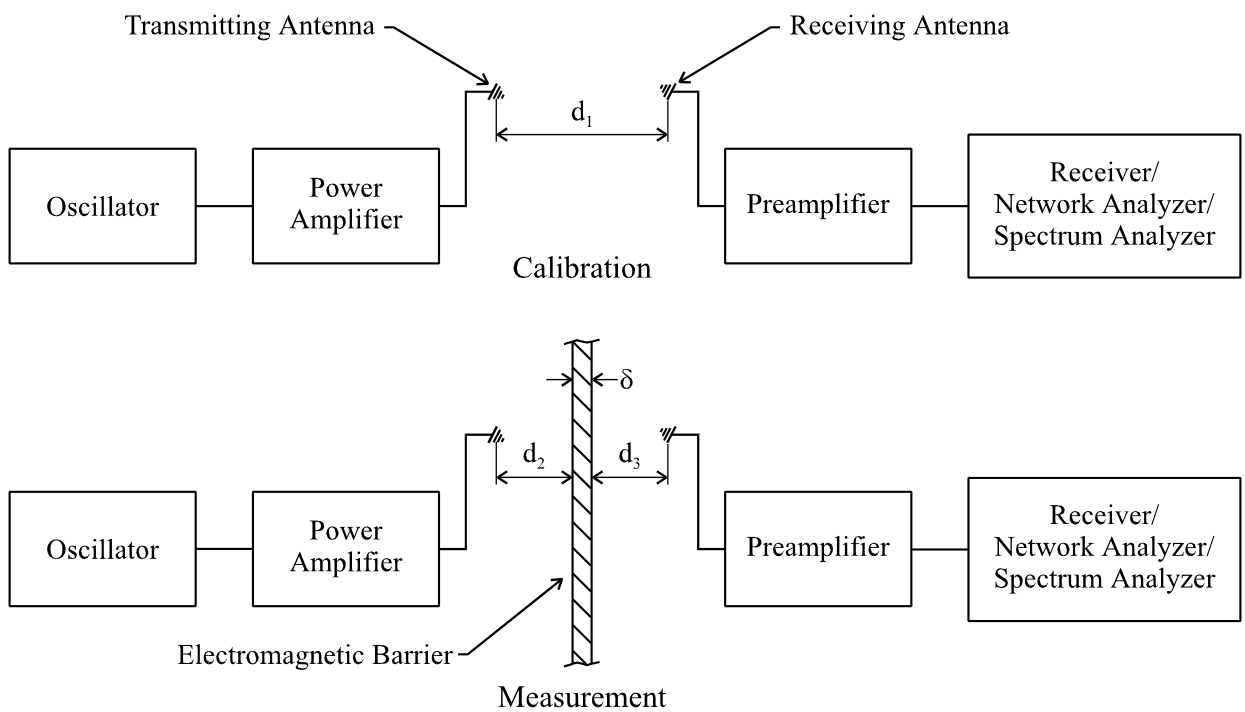

d_1 = 3.05 m (± 0.05 m)
d_2 = 2.05 m (nominal)* - δ
d_3 = 1.0 m (nominal)*

*d_2 and d_3 may be varied by ±0.5 m, while maintaining the total separation of 3.05 m, to eliminate physical interference

FIGURE A-4. Shielding effectiveness calibration and measurement configurations.

The instrumentation system shall be stepped through the test frequencies, and the received signal strength for each test frequency and antenna polarization shall be recorded as the calibration signal (V_c) for that configuration. Frequency stepping shall be interrupted as necessary to perform antenna and equipment changes.

Instrumentation noise data also shall be acquired with the antennas in the calibration configurations. The instrumentation system shall be stepped through the test frequencies, with the power amplifiers deenergized. The received signal strength for each test frequency and antenna polarization shall be recorded as the instrumentation noise signal (V_n) for that configuration. Frequency stepping shall be interrupted as necessary to perform antenna and

Downloaded from http://www.everyspec.com

equipment changes. The system dynamic range (DR) at each frequency and antenna polarization is defined as follows:

$$\mathrm{DR} = 20 \log \left(\frac{V_c}{V_n} \right)$$

where corrections are applied for any differences in instrumentation system gain/attenuation between the calibration and instrumentation noise measurement configurations.

Test equipment shall be chosen to provide a dynamic range at least 20 dB in excess of the shielding effectiveness requirement at each test frequency.

A.5.3 Measurement procedure. Shielding effectiveness measurements for each test area and test point and at each test frequency and required antenna polarization shall be performed as shown in figure A-4. Identical equipment, antennas, cables, and equipment settings (except attenuator settings) shall be used in the calibration and measurement sequences.

The transmitting antenna should normally be placed outside the electromagnetic barrier, along the measurement axis centered on the test area (or test point). The receiving antenna should normally be inside the barrier and shall be centered on the test area (or test point). For the magnetic field measurements, the loops of the transmitting and receiving antennas shall be in the same plane. Dipoles of the transmitting and receiving biconical and log-periodic antennas shall be parallel to each other for the resonant range/plane wave measurements. The nominal distance from the transmitting antenna reference point (center of a loop antenna or feedpoint of a biconical or log-periodic antenna) to the test area surface is 2.05 m (6.7 ft), less the thickness δ of the shield. The nominal distance from the receiving antenna reference point to the test area surface is 1 m (3.3 ft), and at least 0.3 m (12.2 in) clearance between the shield and the closest active point on the antenna shall be maintained. The transmitting and receiving antenna distances from the shield may be varied by ± 0.5 m (1.6 ft), while maintaining the total separation of 3.05 m, to eliminate physical interference. The measurement axis may also be displaced from the center of the test area or test point to eliminate physical interference or to maintain the receiving antenna clearance from the shield. These variations and displacements shall be noted in the test report.

The instrumentation system shall be stepped through the test frequencies, and the received signal strength for each test frequency and antenna polarization shall be recorded as the measured signal (V_m) for that test area (or test point) and configuration. Frequency stepping shall be interrupted as necessary to perform antenna and equipment changes.

Downloaded from http://www.everyspec.com

A.5.4 Facility ambient noise measurement procedure. Facility ambient noise measurements are not required, but are recommended at selected measurement locations for characterizing the operating electromagnetic environment in various parts of the facility and for investigating below-specification shielding effectiveness readings. Ambient noise measurements at a test area or test point are made with the receiving antennas in the same locations and orientations specified for shielding effectiveness measurements (see A.5.3). The instrumentation system is stepped through the test frequencies, with the power amplifiers deenergized, and the received signal strength for each frequency and antenna polarization is recorded as the ambient noise signal (V_a) for that test area (or test point) and configuration. Frequency stepping is interrupted as necessary to perform antenna and equipment changes.

The instrumentation system measurement range (MR) is defined as follows:

$$\mathbf{MR} = 20 \log \left(\frac{V_c}{V_a} \right)$$

where corrections are applied for any differences in instrumentation system gain/attenuation between the calibration and ambient noise measurement configurations.

When facility ambient noise limits the measurement range significantly below the required dynamic range, the noise source should be eliminated if practical. Interference from narrow band ambient noise spikes can also be prevented by adjusting the test frequency selection.

A.5.5 Pass/fail criteria.[9] The shielding effectiveness pass/fail criteria are shown as a function of frequency by figure A-5. The facility HEMP shield and aperture POE protective treatments shall be considered satisfactory when both of the following criteria are met:

a. No sequence of measurements occurs at three consecutive frequencies with the measured shielding effectiveness below the minimum requirements curve (figure A-5).

b. No more than 10 percent of the measurements in any decade (10 kHz – 100 kHz, 100 kHz – 1 MHz, 1 MHz – 10 MHz, 10 MHz – 100 MHz, and 100 MHz – 1 GHz) are below the minimum requirements.

[9] When a shielding effectiveness measurement is performed on a test area surface or test point between the barrier exterior and a special protective volume, the pass/fail criteria are as specified in the design of that special protective volume. A measurement in the adjacent protected volume is also required, to demonstrate that the total attenuation through the main barrier and special protective barrier satisfies these pass/fail requirements.

Downloaded from http://www.everyspec.com

APPENDIX A

When making the pass/fail determination, below-specification shielding effectiveness values can be disregarded if it can be demonstrated that the reading is due to an ambient noise source that cannot practically be eliminated.

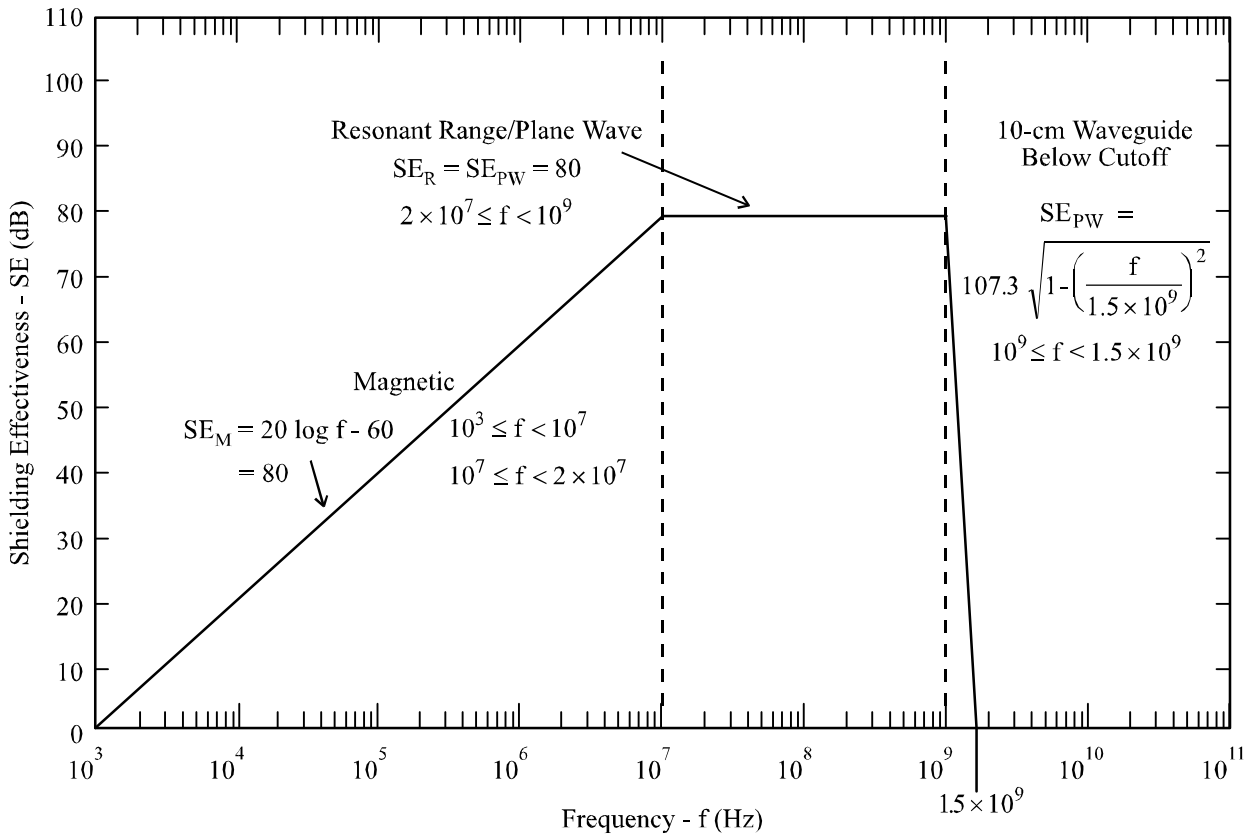

FIGURE A-5. Minimum HEMP shielding effectiveness requirements.

Downloaded from http://www.everyspec.com

APPENDIX B

PULSED CURRENT INJECTION (PCI) TEST PROCEDURES

B.1. GENERAL

B.1.1 Scope. This Appendix is a mandatory part of this standard. The information contained herein is intended for compliance. This Appendix establishes PCI test procedures for electrical point-of-entry (POE) protective devices required for low-risk high-altitude electromagnetic pulse (HEMP) protection of ground-based facilities with critical, time-urgent missions. The procedures are applicable for testing other HEMP-hardened facilities, when specified by the procurement documentation.

B.1.2 Applications. These procedures shall be used for acceptance testing after construction of the HEMP protection subsystem and for verification testing of electrical POE protective treatments after the facility is completed and operational.

B.2. REFERENCED DOCUMENTS

B.2.1 Government documents. The following documents form a part of this Appendix to the extent specified:

MIL-STD-2169	–	High-Altitude Electromagnetic Pulse (HEMP) Environment (U) (document is classified Secret)
MIL-HDBK-423	–	High-Altitude Electromagnetic Pulse (HEMP) Protection for Fixed and Transportable Ground-Based Facilities, Volume I: Fixed Facilities
DI-NUOR-80928	–	Nuclear Survivability Test Plan
DI-NUOR-80929A	–	Nuclear Survivability Test Report
DNA-EMP-1	–	Electromagnetic Pulse (EMP) Security Classification Guide (U) (document is classified S-RD)

(Copies of documents required by contractors in connection with specific acquisition functions should be obtained from the contracting activity or as directed by the contracting officer.)

B.2.2 Non-Government publications. The following document forms a part of this Appendix to the extent specified:

Downloaded from http://www.everyspec.com

APPENDIX B

IEEE-Std-488.1 – Standard Digital Interface for Programmable Instrumentation

(Applications for copies should be addressed to the Institute for Electrical and Electronics Engineers [IEEE], 445 Hoes Lane, Post Office Box 1331, Piscataway NJ 08855-1331.)

B.3 DEFINITIONS

B.3.1 Norms. Scalar quantities that characterize the features of a complicated waveform. Norms used as pass/fail criteria for PCI test residual internal stresses are peak current, peak rate of rise, and root action. These quantities apply to short pulse tests only.

B.3.2 Peak current norm. The maximum absolute value of a current waveform, $I(t)$, expressed in units of amperes, measured from time $t = 0$ to $t = 5 \times 10^{-3}$ s.

B.3.3 Peak rate of rise norm. The maximum absolute value of the first derivative of a current waveform $I(t)$ with respect to time, dI/dt, expressed in units of amperes per second, measured from time $t = 0$ to $t = 5 \times 10^{-3}$ s.

B.3.4 Root action. The root action norm of a current waveform $I(t)$, in units of amperes-$\sqrt{\text{seconds}}$, is defined by the equation

$$\text{Root action} = \sqrt{\int_0^{5\times10^{-3}\text{s}} I^2(t)\, dt}$$

where $t = 0$ at the start of the PCI drive pulse.

B.4. GENERAL REQUIREMENTS

B.4.1 General. PCI acceptance testing is used to demonstrate that electrical POE protective devices, as-installed, perform in accordance with the transient suppression/ attenuation requirements of this standard. PCI verification testing confirms the transient suppression/attenuation performance in operational circuit configurations and demonstrates that mission-critical systems (MCS) are not damaged or upset by residual internal transient stresses.

The test method couples threat-relatable transients to penetrating conductors at injection points outside the electromagnetic barrier. Injections in both common mode (all penetrating conductors of a cable simultaneously driven with respect to ground) and individual wire-to-ground configurations are required. For purposes of this procedure, ground is a point on the facility HEMP shield in the vicinity of the POE protective device under test. Residual internal

Downloaded from http://www.everyspec.com

responses are measured, and operation of the MCS is monitored during the verification test to determine if mission-aborting damage or upsets occur.

The required tests are performed on each penetrating conductor and cable, radio frequency (RF) antenna shield, and conduit shield. Simultaneous injection of all electrical POE protective devices, if practicable, is desirable for verification testing.

B.4.2 Purpose.

B.4.2.1 Purposes of PCI acceptance testing. The purposes of PCI testing, as an acceptance test procedure, are as follows:

a. To measure the performance of as-installed conductive POE protective devices.

b. To demonstrate through post-test inspection, performance checks, and response data analysis that the protective devices will not be damaged or degraded by threat-relatable transients.

c. To identify defective devices or faulty installation practices, so that repairs or replacements can be made.

B.4.2.2 Purposes of PCI verification testing. The purposes of PCI testing, as part of a verification test program, are as follows:

a. To measure the performance of conductive POE protective devices in operational circuit configurations.

b. To demonstrate through post-test inspection, performance checks, and response data analysis that the protective devices will not be damaged or degraded by threat-relatable transients.

c. To identify defective devices or faulty installation practices, so that repairs or replacements can be made.

d. To characterize the residual internal transient stresses.

e. To demonstrate that residual internal transient stresses will not cause mission-aborting damage or upsets of the MCS in their various operating states.

f. To provide data for HEMP hardness assessment of the facility and baseline data for the hardness maintenance/hardness surveillance program.

Downloaded from http://www.everyspec.com

B.4.3 HEMP protection subsystem test configuration.

B.4.3.1 Acceptance test subsystem configuration. PCI testing for acceptance is performed after the POE protective devices have been installed in the facility. The electromagnetic barrier is not required to be complete, but it must be recognized that an incomplete barrier may result in degradations of the POE protective device performance and the instrumentation signal-to-noise ratio. Equipment which, in the facility operation, will electrically connect to the POE protective device under test is not required to be powered or installed.

B.4.3.2 Verification test facility configuration. When PCI verification testing is conducted, the facility shall be in a normal operating configuration and shall be performing actual or simulated missions. The HEMP protection subsystem shall be intact. Equipment which electrically connects to the POE protective device under test shall be powered and operating, except as otherwise specified in this procedure.

B.4.4 Pretest analysis requirements. There are no pretest analyses required for PCI acceptance testing. Pretest analysis for PCI verification testing shall be performed to determine operating states in which the MCS will be tested. An equipment should be tested in multiple states when the transition produces a significantly different propagation path for the residual internal transient, significant change in the equipment vulnerability threshold, or significant change in the function being performed. A mission-critical transceiver, for example, should be tested in at least two states—transmitting and receiving—and a digital interface should be tested in both the low and high signal states.

B.4.5 Test equipment requirements. Test equipment required for PCI testing is identified in table B-I. Current injection pulse generators for all POEs are defined as Norton equivalent generators. Therefore, pulse generator requirements are defined in terms of short-circuit current and source impedance. Short-circuit current is defined as current driven through a short circuit connected to the generator output. Source impedance is defined to be the generator peak open-circuit voltage divided by the peak short-circuit current.

B.4.6 Operational impact analysis and risk.

B.4.6.1 Acceptance testing impact. When PCI testing is performed as an acceptance test procedure, the electromagnetic barrier must remain reasonably intact, such that POE protective device performance and instrumentation signal-to-noise ratio are not excessively degraded. Use of electrically noisy equipment must be restricted in order to achieve the required measurement sensitivity. Construction activity may, therefore, be affected.

Downloaded from http://www.everyspec.com

APPENDIX B

TABLE B-I. PCI test equipment requirements.

Equipment	Characteristics			
	Short Pulse[1]	Intermediate Pulse[1]	Long Pulse[1]	Charge Line Pulser (for RF antenna signal conductors)
Pulse Generators[2]	Up to 5,000-A short-circuit current, source impedance at least 60 Ω, and double exponential waveform	Up to 250-A short-circuit current, source impedance at least 10 Ω, double exponential waveform	Up to 1,000-A short-circuit current, source impedance at least 5 Ω, double exponential waveform	Up to 400-A short-circuit current, source impedance at least 50 Ω, variable pulse width
Current Sensors (Injected Transient)	10 kHz–750 MHz, 0–5,000 A	dc – 10 MHz, 0–250 A	dc – 10 kHz, 0–1,000 A	10 kHz–750 MHz, 0–400 A
Current Sensors (Residual Internal Transient)	100 Hz–750 MHz, 0–100 A, transfer impedance as required for measurement sensitivity	dc – 10 MHz, 0–250 A	dc – 10 kHz, 0–1,000 A	100 Hz–750 MHz, 0–100 A, transfer impedance as required for measurement sensitivity
Oscilloscopes or Transient Digitizers[3]	100 Hz–750 MHz, minimum sensitivity as required for measurement sensitivity	dc – 10 MHz	dc – 10 kHz	100 Hz–750 MHz, minimum sensitivity as required for measurement sensitivity
Data Recorder[3]	0–5 ms	0–50 ms	0–100 s	0–5 ms
Preamplifiers	100 Hz–750 MHz, amplification and noise figure as required for measurement sensitivity	–	–	100 Hz–750 MHz, amplification and noise figure as required for measurement sensitivity
Instrumentation Shield and Power Supplies	As required for isolation from pulse generator	As required for isolation from pulse generator	As required for isolation from pulse generator	As required for isolation from pulse generator
Miscellaneous Cables, Attenuators, and Dummy Load Resistors	As required	As required	As required	As required

[1] See table B-II for characteristics of the short, intermediate, and long pulses.

[2] Pulse generator short-circuit current requirements are stated in terms of current delivered through a short circuit at the generator output terminals. Source impedance is the ratio of the generator peak open-circuit voltage to the peak short-circuit current. The method of coupling the pulse generator output to the penetrating conductor is not specified. However, connection of the pulse generator into the circuit under test must not interfere with normal circuit operation.

[3] Use of a personal computer with an IEEE-488 general purpose interface bus (GPIB), or equivalent, to control instrumentation and store test data on magnetic disk is strongly recommended.

Downloaded from http://www.everyspec.com

B.4.6.2 Verification testing impact. During PCI verification testing, the barrier must remain intact and use of electrically noisy equipment which is not part of the normal site equipment complement must be restricted; unusual operations (facility modification, maintenance) may be affected. Mission operations can continue normally, except as follows:

a. The circuit and POE protective device under test may be unavailable for normal use; it may be necessary to disconnect unprotected equipment outside the barrier, and the circuit may be periodically deenergized.

b. A special sequence of activities may be required so that the circuit and facility can be tested in their various operating states.

B.4.6.3 Risk. PCI testing requires application of high voltages and large currents. Special high-voltage electrical safety precautions apply. Because of the high injection levels, the risk of POE protective device or equipment damage cannot be completely eliminated. However, the procedures are designed to minimize this risk.

B.4.7 Test plan and procedures.

B.4.7.1 Acceptance test plan. A comprehensive, site-specific test plan and detailed test procedures for PCI acceptance testing shall be prepared. These may be combined in a single document, or two separate documents may be used. As a minimum, the documentation shall contain the following information:

a. A statement of the test objectives.

b. Facility identification and description (including a site plan, floor plan of the shielded volume, list of shield POEs, and a description of the HEMP protection subsystem).

c. Identification of circuits and POE protective devices to be tested (including circuit functions and manufacturers' data sheets and specifications for the protective devices).

d. Identification of test points and injection levels (see table B-II).

e. HEMP simulation and data acquisition equipment description (including manufacturer, model and serial numbers, characteristics, and detailed calibration procedures).

f. Detailed test procedures.

Downloaded from http://www.everyspec.com

TABLE B-II. PCI source parameters, waveforms, and acceptance test loads.

a. Electrical POEs, except RF antenna line POEs; double exponential waveforms (figure B-1).

Class of Electrical POE	Type of Injection	Peak Short-Circuit Current $\hat{I}$ (A)	Source Impedance[1] Z_s (Ω)	Risetime τ_R (s)	FWHM (s)	Acceptance Test Load Impedance (Ω)
Commercial Power Lines (Intersite)						
Short Pulse	Common mode[2]	5,000	≥ 60	$\leq 2\times10^{-8}$	5×10^{-7}-5.5×10^{-7}	Not applicable[2]
Short Pulse	Wire-to-ground[3]	2,500	≥ 60	$\leq 2\times10^{-8}$	5×10^{-7}-5.5×10^{-7}	[4] 2 or V_{rated}/I_{rated}
Intermediate Pulse	Common mode[2]	250	≥ 10	$\leq 1.5\times10^{-6}$	3×10^{-3}-5×10^{-3}	Not applicable[2]
Intermediate Pulse	Wire-to-ground[3]	250	≥ 10	$\leq 1.5\times10^{-6}$	3×10^{-3}-5×10^{-3}	50
Long Pulse	Common mode[2]	[5]1,000	≥ 5	≤ 0.2	[5]20-25	Not applicable[2]
Long Pulse	Wire-to-ground[3]	[5]1,000	≥ 5	≤ 0.2	[5]20-25	50
Other Power Lines (Intrasite)						
Unrestricted Lines						
Short Pulse	Common mode[2]	5,000	≥ 60	$\leq 2\times10^{-8}$	5×10^{-7}-5.5×10^{-7}	Not applicable[2]
Short Pulse	Wire-to-ground[3]	2,500	≥ 60	$\leq 2\times10^{-8}$	5×10^{-7}-5.5×10^{-7}	[4]2 or V_{rated}/I_{rated}
Restricted Lines						
Short Pulse	Common mode[2]	800	≥ 60	$\leq 2\times10^{-8}$	5×10^{-7}-5.5×10^{-7}	Not applicable[2]
Short Pulse	Wire-to-ground[3]	[6]$800/\sqrt{N}$ or 500	≥ 60	$\leq 2\times10^{-8}$	5×10^{-7}-5.5×10^{-7}	[4]2 or V_{rated}/I_{rated}
Audio/Data Lines (Intersite)						
Short Pulse	Common mode[2]	5,000	≥ 60	$\leq 2\times10^{-8}$	5×10^{-7}-5.5×10^{-7}	Not applicable[2]
Short Pulse	Wire-to-ground[3]	[6]$5{,}000/\sqrt{N}$ or 500	≥ 60	$\leq 2\times10^{-8}$	5×10^{-7}-5.5×10^{-7}	50
Intermediate Pulse	Common mode[2]	250	≥ 10	$\leq 1.5\times10^{-6}$	3×10^{-3}-5×10^{-3}	Not applicable[2]
Intermediate Pulse	Wire-to-ground[3,7]	250	≥ 10	$\leq 1.5\times10^{-6}$	3×10^{-3}-5×10^{-3}	50
Long Pulse	Common mode[2]	[5]1,000	≥ 5	≤ 0.2	[5]20-25	Not applicable[2]
Long Pulse	Wire-to-ground[3,7]	[5]1,000	≥ 5	≤ 0.2	[5]20–25	50
Control/Signal Lines (Intrasite)						
Unrestricted Lines						
Short Pulse	Common mode[2]	5,000	≥ 60	$\leq 2\times10^{-8}$	5×10^{-7}-5.5×10^{-7}	Not applicable[2]
Short Pulse	Wire-to-ground[3]	[6]$5{,}000/\sqrt{N}$ or 500	≥ 60	$\leq 2\times10^{-8}$	5×10^{-7}-5.5×10^{-7}	[4]2 or V_{rated}/I_{rated}
Restricted Lines						
Short Pulse	Common mode[2]	800	≥ 60	$\leq 2\times10^{-8}$	5×10^{-7}-5.5×10^{-7}	Not applicable[2]
Short Pulse	Wire-to-ground[3]	[6]$800/\sqrt{N}$ or 500	≥ 60	$\leq 2\times10^{-8}$	5×10^{-7}-5.5×10^{-7}	[4]2 or V_{rated}/I_{rated}
Conduit Shields						
Buried[8]	Conduit-to-ground[9]	800	≥ 60	$\leq 2\times10^{-8}$	5×10^{-7}-5.5×10^{-7}	[10] 2
Nonburied	Conduit-to-ground[9]	5,000	≥ 60	$\leq 2\times10^{-8}$	5×10^{-7}-5.5×10^{-7}	[10] 2

Downloaded from http://www.everyspec.com

TABLE B-II. PCI source parameters, waveforms, and acceptance test loads - Continued.

b. RF antenna line POEs.

Class of Electrical POE	Type of Injection	Dominant Response Frequency[11] (MHz)	Peak Short-Circuit Current $\hat{I}$ (A)	Source Impedance[1] Z_s (Ω)	Risetime τ_R (s)	FWHM (s)	Acceptance Test Load Impedance (Ω)
RF Antenna Line Shield							
Buried[8]	Shield-to-ground[12]	Not applicable	[13] 800	≥60	$\leq 2\times10^{-8}$	5×10^{-7}-5.5×10^{-7}	[14] 50
Nonburied	Shield-to-ground[12]	Not applicable	[13] 5,000	≥60	$\leq 2\times10^{-8}$	5×10^{-7}-5.5×10^{-7}	[14] 50
RF Antenna Line Signal Conductor	Wire-to-shield	≤ 30	Threat-level[11]	≥60	$\leq 2\times10^{-8}$	5×10^{-7}-5.5×10^{-7}	[14] 50
	Wire-to-shield	>30	Threat-level[11]	≥50	$\leq 5\times10^{-9}$	Variable[15]	[14] 50

[1] Source impedance, Z_s, is defined as pulser peak time-domain open-circuit voltage divided by pulser peak time-domain short-circuit current.

[2] For a common mode test, all penetrating conductors in the cable are simultaneously driven with respect to ground, where ground is a point on the facility HEMP shield in the vicinity of the POE. Common mode tests are required for verification, but they are not required for acceptance.

[3] For a wire-to-ground test, each penetrating conductor in the cable is driven with respect to ground, where ground is a point on the facility HEMP shield in the vicinity of the POE protective device.

[4] Whichever is smaller. V_{rated} and I_{rated} are the maximum voltage and current ratings of the POE protective device, respectively.

[5] The long pulse peak short-circuit current (1,000 A) and FWHM (20-25 s) are design objectives. Any double exponential waveform with peak short-circuit current ≥ 200 A, risetime ≤ 0.2 s, and peak current x FWHM product ≥ 2 x 10^4 A-s satisfies the minimum requirement.

[6] Whichever is larger. N is the number of penetrating conductors in the cable.

[7] Intermediate and long pulse wire-to-ground tests of audio/data lines are required for acceptance, but they are not required for verification.

[8] An antenna shield is considered buried when it terminates at a buried antenna and less than 1 m (3.3 ft) of its total length is not covered by earth or concrete fill. A conduit is considered buried when it connects two protected volumes and less than 1 m (3.3 ft) of its total length is not covered.

[9] For a conduit-to-ground test, maximum feasible length of the conduit is driven with respect to ground, where ground is a point on the facility HEMP shield in the vicinity of the conduit penetration.

[10] Wiring internal to the conduit is terminated at the installed equipment, if present. Other internal wiring is bundled together and terminated in common 2 Ω resistors at each end. The conduit is electromagnetically closed to the facility HEMP shields at both ends.

[11] The dominant response frequency (or frequencies) and threat-level peak short-circuit current are determined from extrapolated coupling measurements.

[12] For a shield-to-ground test, maximum feasible length of the antenna line shield is driven with respect to ground, where ground is a point on the facility HEMP shield in the vicinity of the POE protective device.

[13] Double exponential waveform (figure B-1).

[14] Signal conductor terminated to the shield with 50 Ω. The shield conductor is electrically bonded to the facility HEMP shield.

[15] Output waveform of the charge line pulser, with the length of the charge line equal to the quarter-wavelength of the dominant response frequency. If the PCI current requirement exceeds the capability of the charge line pulser, the short double-exponential pulser shall be used.

Downloaded from http://www.everyspec.com

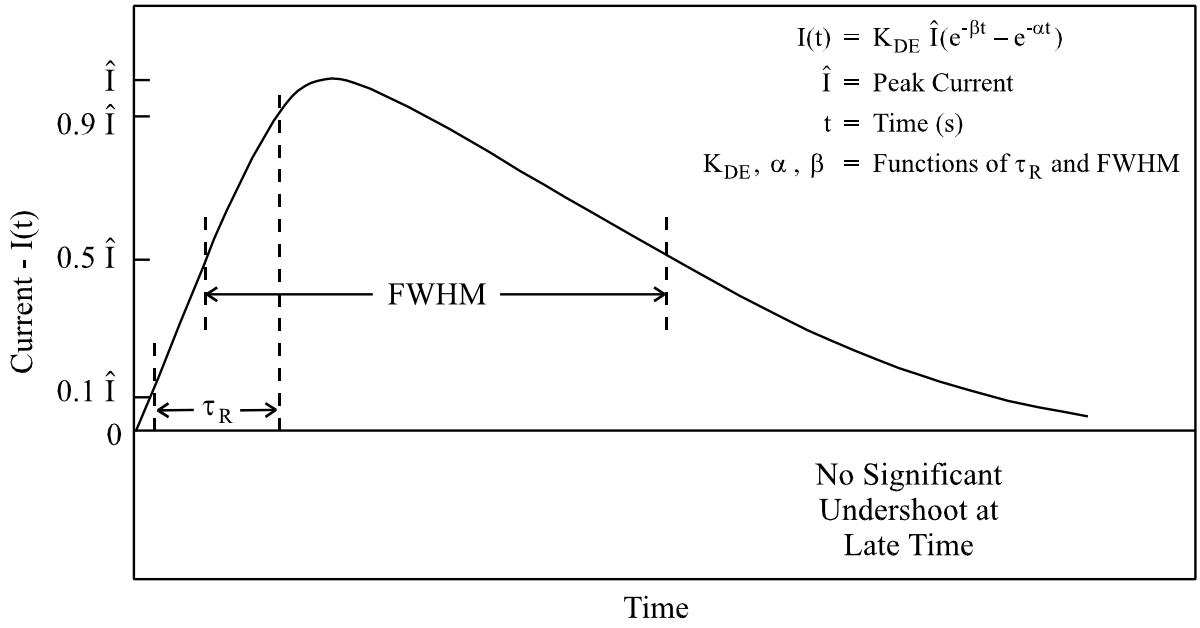

FIGURE B-1. Double exponential waveform.

g. Any deviations from the requirements of this Appendix.

h. Data management (including data quality control procedures, data acceptability criteria, data processing requirements, annotation and preservation of data records, and pass/fail criteria).

i. Safety, including electromagnetic radiation and electrical shock hazards.

j. Security (see B.4.10).

k. Test schedule (including priority of measurements).

Data item description DI-NUOR-80928, "Nuclear Survivability Tests Plan," shall be used.

B.4.7.2 Verification test plan. A comprehensive, site-specific test plan and detailed test procedures for PCI verification testing shall be prepared. These may be combined in a single document, or two separate documents may be used. As a minimum, the documentation shall contain the following information:

a. A statement of the test objectives.

Downloaded from http://www.everyspec.com

b. Facility identification and description (including a site plan, floor plan of the shielded volume, list of shield POEs, list of MCS inside and outside the electromagnetic barrier, and a description of the HEMP protective subsystem).

c. Identification of circuits and POE protective devices to be tested (including circuit functions and manufacturers' data sheets and specifications for the protective devices).

d. Identification of test points.

e. HEMP simulation and data acquisition equipment description (including manufacturer, model and serial numbers, characteristics, and detailed calibration procedures).

f. Detailed test procedures (including system and circuit configuration requirements, equipment operating states, diagrams of the data acquisition system, injection levels [see table B-II], data requirements, and step-by-step procedures).

g. Any deviations from the requirements of this Appendix.

h. Data management (including data quality control procedures, data acceptability criteria, data processing requirements, annotation and preservation of data records, and pass/ fail criteria).

i Safety, including electromagnetic radiation and electrical shock hazards.

j Security (see B.4.10).

k Test schedule (including priority of measurements).

Data item description DI-NUOR-80928, "Nuclear Survivability Tests Plan," shall be used.

B.4.8 Test report requirements.

B.4.8.1 Acceptance test report. A PCI acceptance test report shall be prepared. As a minimum, the test report shall contain the following information:

a. Facility identification and reference to the applicable test plan.

b. A discussion of any deviations from the test plan and requirements of this Appendix.

c. Copies of the measured results, along with sensor calibrations and instrumentation settings required to convert the data to engineering units.

Downloaded from http://www.everyspec.com

d. A summary table of the norms of the measured internal responses and comparison to the maximum allowable residual internal response characteristics (see table B-III).

e. Pass/fail conclusions.

Data item description DI-NUOR-80929A, "Nuclear Survivability Test Report," shall be used.

B.4.8.2 Verification test report. A PCI verification test report shall be prepared. As a minimum, the test report shall contain the following information:

a. Facility identification and reference to the applicable test plan.

b. A discussion of any deviations from the test plan and requirements of this Appendix.

c. Copies of the measured results, along with sensor calibrations and instrumentation settings required to convert the data to engineering units.

d. A summary table of the norms of the measured internal responses and comparison to the maximum allowable residual internal response characteristics (see table B-III).

e. Test conclusions (including a definitive statement of HEMP hardness of mission functions, based on the continuous wave [CW] immersion [see Appendix C] and PCI test results and supporting analysis).

f. Test chronology (including a sequence of events and identification of failures, upsets, or interference observed and the conditions under which they occurred).

Data item description DI-NUOR-80929, "Nuclear Survivability Test Report," shall be used.

B.4.9 Post-test analysis requirements.

B.4.9.1 Analysis of acceptance test data. Post-test analysis of PCI acceptance measured data is required for data corrections for probe and instrumentation response characteristics and conversion of results into norms in engineering units.

Downloaded from http://www.everyspec.com

TABLE B-III. Maximum allowable residual response characteristics for electrical POEs.

Class of Electrical POEs	Type of Injection	Type of Measurement	Peak Current (A)	Peak Rate of Rise (A/s)	Root Action ($A\sqrt{s}$)
Commercial Power Lines (Intersite)					
Short Pulse	Common Mode	Bulk current	≤ 10	$\leq 1\times10^{7}$	$\leq 1.6\times10^{-1}$
Short Pulse	Wire-to-ground	Wire current	≤ 10	$\leq 1\times10^{7}$	$\leq 1.6\times10^{-1}$
Intermediate Pulse	Common mode	Bulk current	No damage or performance degradation[1]		
Intermediate Pulse	Wire-to-ground	Wire current	No damage or performance degradation[1]		
Long Pulse	Common mode	Bulk current	No damage or performance degradation[1]		
Long Pulse	Wire-to-ground	Wire current	No damage or performance degradation[1]		
Other Power Lines (Intrasite)					
Short Pulse	Common mode	Bulk current	≤ 10	$\leq 1\times10^{7}$	$\leq 1.6\times10^{-1}$
Short Pulse	Wire-to-ground	Wire current	≤ 10	$\leq 1\times10^{7}$	$\leq 1.6\times10^{-1}$
Audio/Data Line(Intersite)					
Short Pulse	Common mode	Bulk current	≤ 0.1	$\leq 1\times10^{7}$	$\leq 1.6\times10^{-3}$
Short Pulse	Wire-to-ground	Wire current	≤ 0.1	$\leq 1\times10^{7}$	$\leq 1.6\times10^{-3}$
Intermediate Pulse	Common mode	Bulk current	No damage or performance degradation[1]		
Intermediate Pulse	Wire-to-ground	Wire current	No damage or performance degradation[1]		
Long Pulse	Common mode	Bulk current	No damage or performance degradation[1]		
Long Pulse	Wire-to-ground	Wire current	No damage or performance degradation[1]		
Control/Signal Lines (Intrasite)					
Low-Voltage Lines[2]					
Short Pulse	Common mode	Bulk current	≤ 0.1	$\leq 1\times10^{7}$	$\leq 1.6\times10^{-3}$
Short Pulse	Wire-to-ground	Wire current	≤ 0.1	$\leq 1\times10^{7}$	$\leq 1.6\times10^{-3}$
High-Voltage Lines[2]					
Short Pulse	Common mode	Bulk current	≤ 1.0	$\leq 1\times10^{7}$	$\leq 1.6\times10^{-2}$
Short Pulse	Wire-to-ground	Wire current	≤ 1.0	$\leq 1\times10^{7}$	$\leq 1.6\times10^{-2}$

Downloaded from http://www.everyspec.com

TABLE B-III. Maximum allowable residual internal response characteristics for electrical POEs - Continued.

Class of Electrical POEs	Type of Injection	Type of Measurement	Peak Current (A)	Peak Rate of Rise (A/s)	Root Action ($A\sqrt{s}$)
Conduit Shields					
Signal and Low Current Power[3]					
Buried or Nonburied Conduit	Conduit-to-ground	Bulk current	≤ 0.1	$\leq 1\times10^{7}$	$\leq 1.6\times10^{-3}$
Intermediate Current Power[3]					
Buried or Nonburied Conduit	Conduit-to-ground	Bulk current	≤ 1.0	$\leq 1\times10^{7}$	$\leq 1.6\times10^{-2}$
High Current Power[3]					
Buried or Nonburied Conduit	Conduit-to-ground	Bulk current	≤ 10	$\leq 1\times10^{7}$	$\leq 1.6\times10^{-1}$
RF Antenna Line Shield Drive					
Core Conductor (All RF Antenna Lines)	Shield-to-ground	Wire current	≤ 0.1	No damage or performance degradation[1]	
Shield Conductor	Shield-to-ground	Shield current	≤ 0.1	$\leq 1\times10^{7}$	$\leq 1.6\times10^{-3}$
RF Antenna Line Core Conductor Drive					
Core Conductor (Receive -Only)	Wire-to-shield	Wire current	≤ 0.1	No damage or performance degradation[1]	
Core Conductor (Transmit or Transceive)	Wire-to-shield	Wire current	≤ 1.0	No damage or performance degradation[1]	
Shield Conductor	Wire-to-shield	Shield current	≤ 0.1	$\leq 1\times10^{7}$	$\leq 1.6\times10^{-3}$

[1]Pass/fail criteria on internal response waveform norms are not specified for intermediate or long pulse current injection test sequences. Pass/fail criteria on the peak rate of rise and root action norms are not specified for RF antenna line signal conductors. The pass/failcriteria of no POE protective device damage or performance degradation also applies to PCI test sequences where this note does not appear in the table.

[2]Low-voltage control/signal lines are those with a maximum operating voltage < 90 V. High-voltage control/signal lines are those with maximum operating voltage ≥ 90 V.

[3]Low current power lines are those with a maximum operating current < 1 A. Intermediate current power lines are those with maximum operating current between 1 A and 10 A. High current power lines are those with maximum operating current > 10 A.

Downloaded from http://www.everyspec.com

B.4.9.2 Analysis of verification test data. Post-test analysis of PCI verification measured data is required for data corrections for probe and instrumentation response characteristics and conversion of results into norms in engineering units. Additional analysis of measured data shall be performed to assist in developing a definitive statement of facility HEMP hardness. Detailed requirements for post-test analysis of PCI verification test results will be established by the sponsoring agency for the test. They will generally include calculations of threat responses from CW immersion and PCI test data, analysis of verification test adequacy, development of hardness conclusions, and recommendations for corrective actions, if required.

B.4.10 Data classification. Test data may be classified. DNA-EMP-1 and the classification guide for the specific facility or system should be consulted for guidance.

B.4.11 Alternative test methods. When approved by the sponsoring agency, cable shield injection may be used for verification testing on shielded intrasite control or signal lines in lieu of the common mode PCI requirement. Maximum required current amplitude and the prescribed waveform for cable shield injection shall be as shown in table B-IV. Intrasite cable shields shall be driven over their entire length by removing or buffering/isolating intermediate grounds and other low-impedance paths to ground along the cable run. Internal response measurements shall be made on the bulk cable. Pass/fail criteria of table B-III apply.

TABLE B-IV. Cable shield PCI amplitudes and waveforms.

Class of Electrical POE	Double Exponential Waveform (figure B-1)		
	Peak Short-Circuit Current $\hat{I}$ (A)	Risetime τ_R (s)	FWHM (s)
Control/Signal Lines (Intrasite)	5,000	$\leq 2\times10^{-8}$	5×10^{-7}–5.5×10^{-7}

B.5. DETAILED REQUIREMENTS

B.5.1 Test configuration. Typical PCI test configurations are illustrated in figure B-2, and a typical data recording system is illustrated in figure B-3. The pulse generator output may be directly coupled to the circuit under test, or it may be capacitively or inductively coupled. The external current sensor shall be within 15 cm (6 in) of the external terminal of the POE protective device, and there shall be no branches in the wiring between the sensor location and the external terminal. The internal current sensor shall be within 15 cm (6 in) of the internal terminal of the POE protective device, and there shall be no branches in the wiring between the sensor location and the internal terminal.

Downloaded from http://www.everyspec.com

APPENDIX B

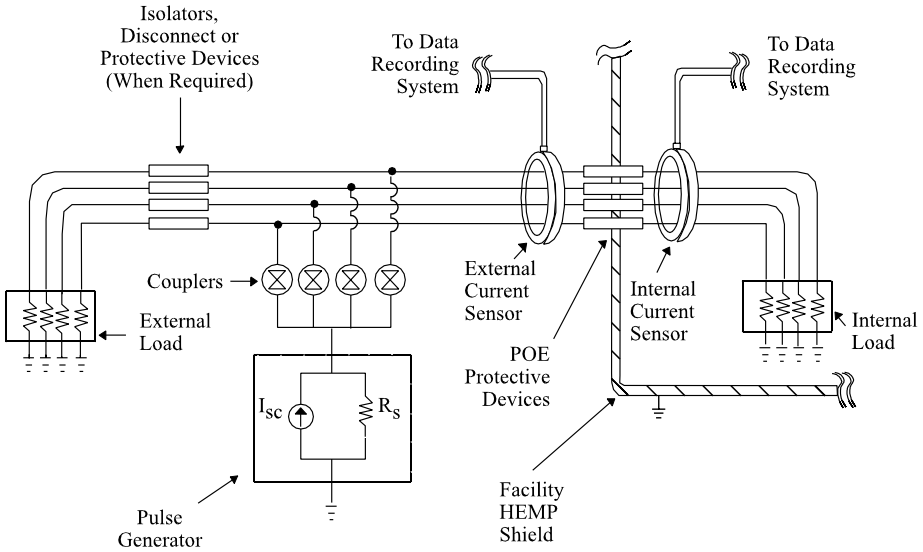

a. Common mode test configuration.

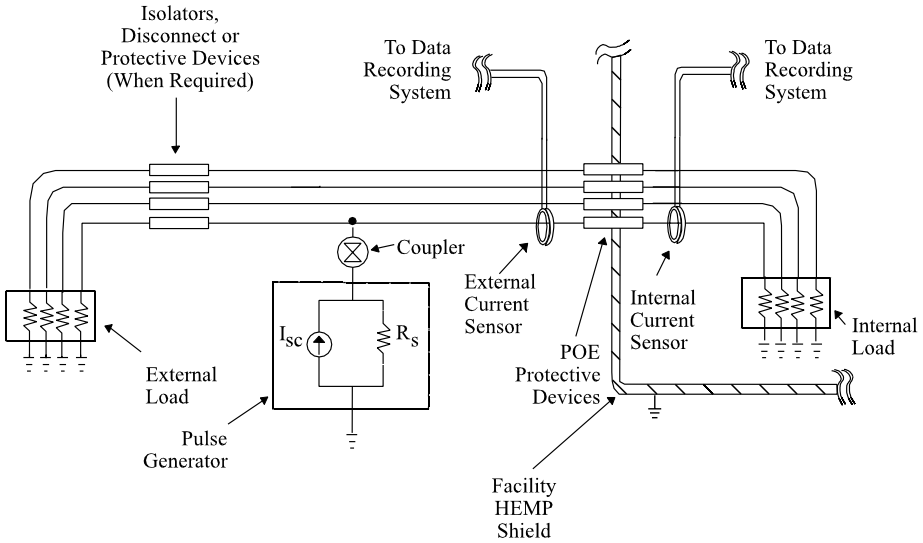

b. Wire-to-ground test configuration.

FIGURE B-2. Typical PCI test configurations.

Downloaded from http://www.everyspec.com

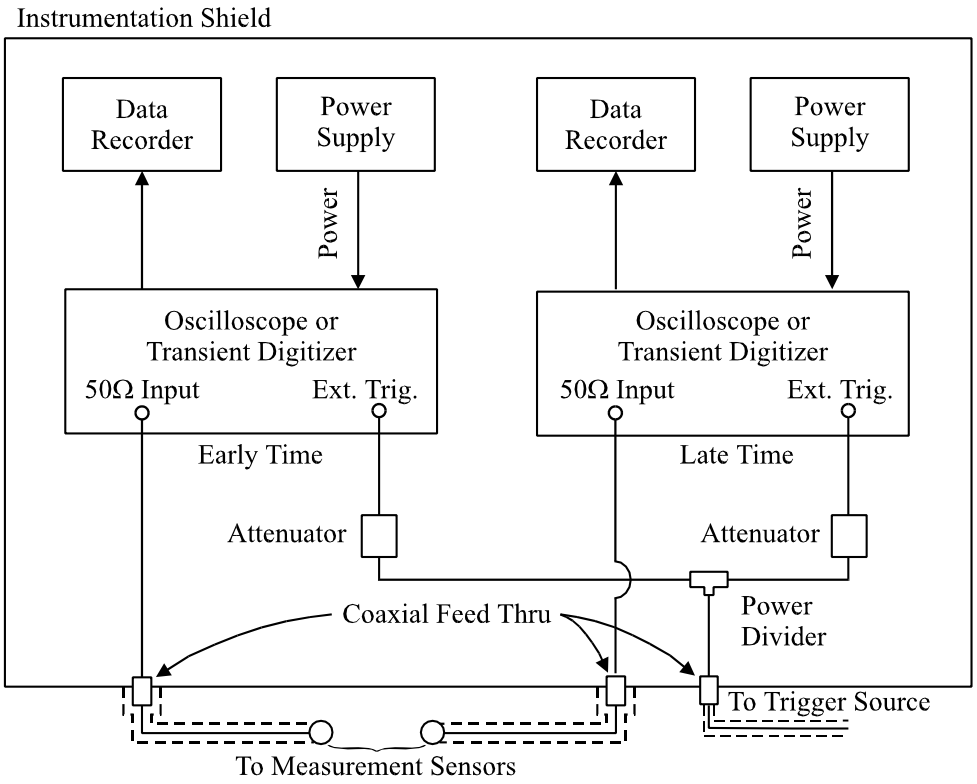

FIGURE B-3. Typical PCI data recording system.

B.5.1.1 Acceptance test configuration. For PCI performed as acceptance testing, the external load shall be an open-circuit termination and the internal load shall be a dummy resistor (see B 5.2.3).

B.5.1.2 Verification test configuration. For PCI verification testing, the external load shall be the installed site equipment or an equivalent dummy load impedance[10], which permits the circuit under test to be energized and performing actual or simulated functions. The internal load for PCI verification testing shall be the installed site equipment, which shall be

[10]When the external equipment is not designed to withstand the test transients, temporary protection should be provided or a dummy load should be used in palce of the external equipment.

Downloaded from http://www.everyspec.com

energized[11] and performing actual or simulated functions. Isolators shall be installed on the wires under test to direct injected current toward the internal load under test (see figure B-2). The isolators shall be compatible with site equipment in actual or simulated operating condition.

B.5.2 Current injection requirements.

B.5.2.1 Electrical POEs, except RF antenna line signal conductors.

B.5.2.1.1 Maximum injection levels. Maximum required short-circuit current amplitudes, source impedances, and prescribed waveforms for PCI acceptance and verification testing for all classes of electrical POEs, except RF antenna line signal conductors, shall be as shown in table B-II and figure B-1. Common mode PCI injections are required only during verification testing, and the intermediate and long pulse wire-to-ground tests on intersite audio or data lines are required only for acceptance testing.

B.5.2.1.2 Testing sequence. To minimize the possibility of POE protective device or equipment damage, a series of pulses at increasing amplitudes shall be applied as follows:

a. Pulse at the lowest available current output from the pulse generator. This level shall be less than 10 percent of the maximum amplitude in table B-II, or less than that amplitude which activates any nonlinear components in the POE protective device, whichever is greater.

b. Perform a series of pulses, increasing the amplitude by a factor of approximately two at each step. When testing several circuits with identical POE protective devices, this series of intermediate pulses may be abbreviated after the first two samples.

c. Pulse at the maximum required amplitude for the circuit under test. Peak current should not exceed 110 percent of the levels listed in table B-II.

This sequence shall be used for both acceptance and verification testing.

CAUTION: Electrical POE protective devices have limited pulse lives. The number of test pulses delivered to each device, peak currents, and pulse widths should be recorded for inclusion in maintenance records. If the total number of previous pulses on the device exceeds 90 percent of the rated life, devices should be replaced before starting the test.

---

[11]When the circuit under test operates at voltages greater than 600 Vac or 600 Vdc and cannot safely be tested with power on, PCI verification testing may be performed in a deenergized condition. Switches, relay contacts, and other circuit interrupters shall be placed in the operating state to simulate the power-on condition.

Downloaded from http://www.everyspec.com

B.5.2.2 RF antenna line signal conductors. The HEMP protection on RF antenna line signal conductors shall be tested using the general procedure for special protective measures. The test shall include coupling measurements on the antenna subsystem, PCI testing at the antenna terminals, and PCI testing of the protected MCS when required by this sequence.

B.5.2.2.1 Coupling measurements. Coupling measurements shall be made on the antenna subsystem that includes the antenna, antenna protective device (if provided), associated electronics and tuning equipment outside the electromagnetic barrier (if provided), the external RF transmission line, and the main barrier POE protective device (or primary special POE protective device, if the interior equipment is within a special protective volume) as shown in figure B-4. The antenna line shall be terminated inside the electromagnetic barrier into a dummy resistor, having resistance equal to the transmission line characteristic impedance, for acceptance testing and into the installed site equipment, which shall be energized and operating, for verification testing. An antenna with tuning circuits outside the electromagnetic barrier shall be tested at the lowest operating frequency, a midband operating frequency, and the highest operating frequency. If the antenna subsystem is not available at the time of facility acceptance from the construction contractor, acceptance testing shall be deferred until the complete antenna subsystem is installed.

Excitation for the coupling measurements shall be supplied by CW immersion (see Appendix C) or another threat-relatable method. To the extent practical, the locations and polarizations of the transmitting antennas shall be chosen to maximize the antenna response. Measurements of the signal conductor current shall be made at the antenna terminal and on the protected side of the main barrier (or primary special) POE protective device.

Coupling measurements shall be extrapolated to the reasonable-worst-case threat level for the MIL-STD-2169 HEMP environment, assuming linear behavior of the antenna subsystem. The extrapolation shall include a factor of 10 to account for uncontrollable coupling parameters, such as incident field polarization, and other uncertainties present in the coupling test (see MIL-HDBK-423), unless a smaller correction can be justified in the extrapolation analysis. The peak antenna threat-level response current amplitude and dominant response frequency (or frequencies), indicated by a significant peak in the current response per unit incident field versus frequency curve, shall be determined. The peak residual internal response current amplitude shall also be determined.

It is not necessary to repeat the coupling measurements during the verification test sequence if the configuration of the antenna subsystem and equipment in its vicinity has not changed between acceptance and verification testing. PCI verification injection levels shall be determined from the extrapolated acceptance coupling measurements when new coupling measurements are not required.

Downloaded from http://www.everyspec.com

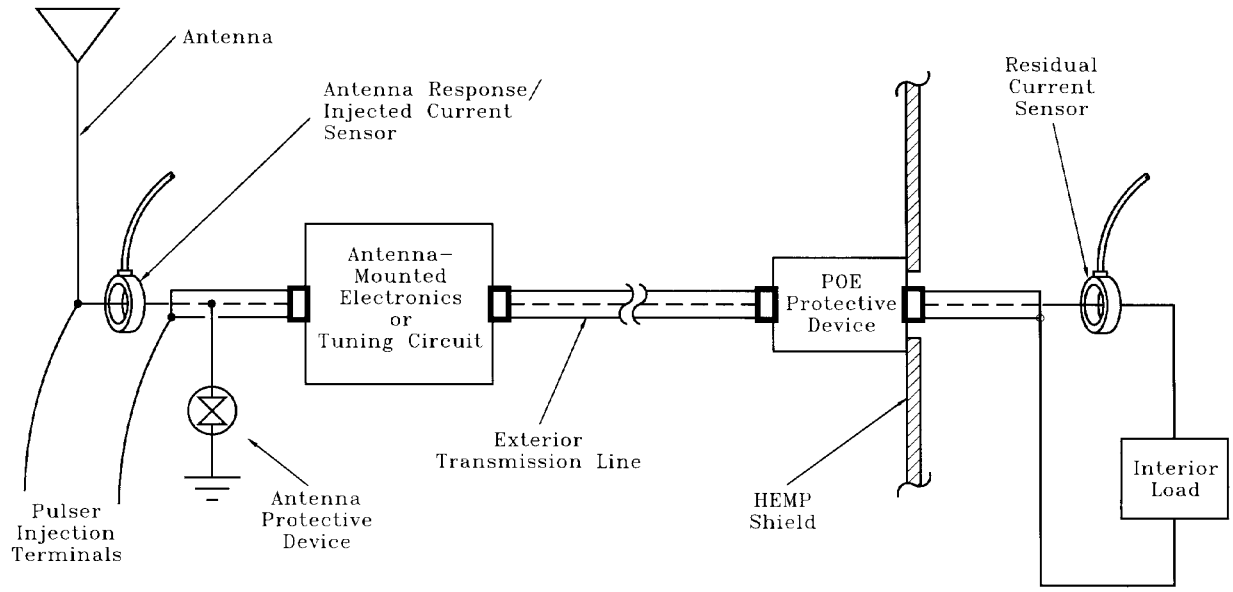

FIGURE B-4. Antenna subsystem configuration for coupling measurements and PCI testing.

B.5.2.2.2 Antenna terminal PCI test. PCI testing of an RF antenna line signal conductor POE shall be performed on the complete antenna subsystem, using injections at the antenna terminals. An antenna with tuning circuits outside the electromagnetic barrier shall be PCI tested at the lowest operating frequency, a midband operating frequency, and the highest operating frequency. An antenna with multiple dominant response frequencies shall be tested at all such frequencies.

The short, double exponential pulse generator shall be used for PCI testing at a dominant response frequency ≤ 30 MHz. The charge line pulser, with the charge line length adjusted to the quarter-wavelength of the dominant response frequency, shall be used for testing at frequencies greater than 30 MHz. If the required injection level exceeds the charge line pulser capability, the short double exponential pulse generator shall be employed. The highest required injection level shall be that provided at the pulser charge voltage that produces two times the extrapolated peak antenna threat-level response current into a short-circuit calibration load.

Downloaded from http://www.everyspec.com

Injections shall be sequentially performed at approximately 10 percent, 25 percent, 50 percent, and 100 percent of the highest required level. Injected current and residual internal current waveforms shall be recorded, and peak levels shall be graphed versus pulser charge voltage. Additional pulses shall then be applied at pulser charge voltages where the responses are nonlinear functions of the voltage. These additional shots ensure that the largest pulser-produced peak residual current, which may not occur at the highest injection level, is recorded.

B.5.2.2.3 Internal equipment PCI test. If the peak residual interior current measured in the antenna terminal PCI test exceeds the applicable maximum allowable limit (table B-III), a special protective volume is required to enclose the wiring and equipment directly connected to the POE protective device. Verification testing of the special protective volume and enclosed MCS is also required.

B.5.2.3 Acceptance test load resistance. Ohmic values of the PCI acceptance test internal load resistors for all classes of electrical POEs shall be as listed in table B-II. For wire-to-ground tests, only the penetrating conductor under test requires the specified termination. For conduit shield tests, internal wiring shall be terminated on normal equipment, if present, and other conductors shall be bundled together and terminated with a common 2-Ω resistor at each end. Wiring which connects the load resistor between the internal terminal of the POE protective device and its enclosure shall be less than 30 cm (12 in) in length.

B.5.3 Measurements and functional observations.

B.5.3.1 Data requirements. At each step in the testing sequence, for both acceptance and verification testing, the external pulse amplitude and waveform and the internal pulse amplitude and waveform shall be recorded.[12] The internal pulse waveform shall be recorded for 5 ms after the start of the PCI short drive pulse, with recording instrument sweep speeds that allow resolution of the early, intermediate, and late time responses.

B.5.3.2 Verification test functional observations. Operation of facility MCS shall be monitored during and immediately after the pulse for indications of damage or upset. A detailed description of any abnormal occurrences shall be prepared for inclusion in the test chronology.

B.5.4 Measurement procedures. PCI test procedures for acceptance and verification testing shall be as follows:

---

[12]When the POE protective device leads into a special protective volume inside the electromagnetic barrier, amplitudes and waveforms shall also be recorded on all electrical POEs through the special protective barrier into the protected volume. The measurements shall be made in the protected volume. Pass/fail criteria for these data are the same as the pass/fail criteria for other internal response measurements.

Downloaded from http://www.everyspec.com

a. Set up the pulse generator source and data acquisition equipment in the desired configuration and perform calibrations.

b. Deenergize the circuit to be tested for acceptance testing or when required by safety considerations, and install sensors. Reenergize the circuit after sensor installation is complete (verification test only).

c. Perform a noise check of the data recording system to ensure a satisfactory signal-to-noise ratio.

d. Establish the required facility, equipment state, and test configurations.

e. Inject a pulse into the circuit under test (see B.5.2).

f. Record measurement point responses.

g. Record results from the functional monitoring of the MCS (verification test only).

h. Compare measured and observed results to the pass/fail criteria (see B.5.5). If the results are not satisfactory, halt the test and effect repairs or replacement of the POE protective device. Repeat the PCI test procedure after the corrective action has been completed.

i. Repeat steps e through h at increasing injection levels until the maximum required transient has been injected. (Additional injections may be required for PCI testing of RF antenna line signal conductors at pulser charge voltages where measured responses are nonlinear functions of the voltage [see B.5.2.2].)

j. Continue to the next state to be tested and repeat steps d through i (verification test only).

k. Deenergize the circuit under test, when required, and remove the sensors and pulse generator output connections.

l. Disconnect the electric surge arrester (if installed) from the circuit. Measure the voltage at 1 mA dc of a metal oxide varistor or the dc breakdown voltage of a spark gap. Compare the measured results to the device specifications. If the results are not satisfactory, effect repairs or replacement of the POE protective device. Repeat the PCI test procedure after the corrective action has been completed.

m. Reconnect the electric surge arrester (if installed), and restore the circuit to its operational configuration.

Downloaded from http://www.everyspec.com

n. Continue to the next circuit to be tested and repeat steps b through m.

B.5.5 Pass/fail criteria.

B.5.5.1 Internal response pass/fail criteria. The POE protective device shall be considered satisfactory when both of the following criteria are met:

a. Norms of the measured internal response waveforms, at all short pulse injection levels, do not exceed the maximum allowable norm values of table B-III for the applicable class of electrical POE.[13] If internal responses measured in the PCI verification test cannot be discriminated from circuit operating and noise signals, the test shall be repeated in a power-off (acceptance) configuration. The pass/fail determination for internal response norms shall then be made using the resulting power-off data.

b. Post-test physical inspection of the POE protective device, measurement of surge arrester (if installed) voltage at 1 mA dc current (for a metal oxide varistor) or dc breakdown voltage (for a spark gap), and response data analysis indicate that the device has not been damaged or degraded by the test pulses.

The internal response pass/fail criteria apply for both acceptance and verification testing.

B.5.5.2 Verification test functional pass/fail criteria. Hardening of equipment within the electromagnetic barrier shall be considered satisfactory when both of the following criteria are met:

a. No damage to MCS occurred during the PCI verification testing.

b. No mission-aborting interruption of mission-critical functions or upsets of MCS occurred during the PCI verification testing.[14]

B.5.5.3 Test failures. Any failure to satisfy the internal response or functional success criteria shall be considered a HEMP vulnerability. An investigation into the cause of the possible vulnerability shall be conducted. The condition shall be corrected, if possible, and the PCI verification test sequence shall be repeated.

---

[13] When the protected side of the POE protective device is contained within a special protective volume, norms of the measured internal responses must not exceed design values for that special protective volume.

[14] The determination of whether an observed interruption or upset impacts the mission is the responsibility of the operational authority for the facility.

Downloaded from http://www.everyspec.com

APPENDIX C

CONTINUOUS WAVE (CW) IMMERSION TEST PROCEDURES

C-1. GENERAL

C.1.1 Scope. This Appendix is a mandatory part of the standard. The information contained herein is intended for compliance. This Appendix establishes procedures for CW immersion testing of the electromagnetic barrier required for low-risk high-altitude electromagnetic pulse (HEMP) protection of ground-based facilities with critical, time-urgent missions. The procedures are applicable for testing other HEMP-hardened facilities, when specified by the procurement documentation.

C.1.2 Applications. These procedures shall be used for verification testing of the facility HEMP shield and aperture point-of-entry (POE) protective treatments.

C.2. REFERENCED DOCUMENTS

C.2.1 Government documents. The following documents form a part of this Appendix to the extent specified:

MIL-STD-2169	–	High-Altitude Electromagnetic Pulse (HEMP) Environment (U) (document is classified Secret)
MIL-HDBK-423	–	High-Altitude Electromagnetic Pulse (HEMP) Protection for Fixed and Transportable Ground-Based Facilities, Volume I: Fixed Facilities
DI-NUOR-80928	–	Nuclear Survivability Test Plan
DI-NUOR-80929A	–	Nuclear Survivability Test Report
DNA-EMP-1	–	Electromagnetic Pulse (EMP) Security Classification Guide (U) (document is classified S-RD)

(Copies of documents required by contractors in connection with specific acquisition functions should be obtained from the contracting activity or as directed by the contracting officer.)

C.2.2 Non-Government publications. The following document forms a part of this Appendix to the extent specified:

IEEE-Std-488.1	–	Standard Digital Interface for Programmable Instrumentation

Downloaded from http://www.everyspec.com

APPENDIX C

(Applications for copies should be addressed to the Institute for Electrical and Electronics Engineers [IEEE], 445 Hoes Lane, Post Office Box 1331, Piscataway NJ 08855-1331.)

C.3. DEFINITIONS

C.3.1 Illuminating field. The total electromagnetic field, including ground effects, at a location with respect to the CW transmitting antenna, that would be measured at that point if the facility or system under test was not present. Thus, the illuminating field does not include reflections from the facility under test.

C.3.2 Principal component of the illuminating field. A magnetic or electric field component that is maximized by the CW transmitting antenna geometry and ground effects. For example, azimuthal magnetic field and vertical electric field are principal components of the illuminating field of a vertical monopole antenna over a ground plane.

C.3.3 Reference field. The reference field in a CW immersion test is a measured field for monitoring the output from the transmitting antenna. This field is recorded in the reference channel of the network analyzer used for data acquisition. The reference sensor must be placed at a location with respect to the CW transmitting antenna and facility at which reflections from the test article are negligible at all frequencies of interest, such that the reference measurement has a known relationship to the illuminating field.

To minimize errors in the subsequent data analysis, the reference sensor should measure a field componet that is relatively smooth and flat over the entire frequency range. Examples of such components are the horizontal component of the radial magnetic field parallel to and near the ground for a horizontally polarized transmitting antenna and the horizontal component of the azimuthal magnetic field or vertical electric field near ground for a vertically polarized transmitting antenna.[15]

The reference field must be recorded for two types of measurements:

a. Field mapping – Measurement of the illuminating field relative to the reference sensor in a field mapping area that is free of electromagnetic reflectors (except ground). The location of the illuminating field sensor with respect to the transmitting antenna and reference sensor must replicate the facility location (or locations) that will exist during the CW immersion test. This is needed for subsequent data analysis (extrapolation to threat and establishment of pass/fail conclusions—see C.5.6).

---

[15]The horizontal component of the electric field or the vertical component of the magnetic field should not be used because of the low magnitude of these field components close to a ground. At a height above ground where the magnitude of these components becomes large, this magnitude contains many nulls in the range of 5 MHz to 1 GHz.

Downloaded from http://www.everyspec.com

b. System response – Measurement of the residual response fields and currents inside the facility relative to the reference sensor when the facility is illuminated by the CW field.

C.5.6 describes the analysis of the data from the above two measurements to make the pass/fail determination.

C.4. GENERAL REQUIREMENTS

C.4.1 General. The CW immersion test procedure is an element of verification testing, performed as soon as practical after the HEMP-protected facility is completed and operational. The test method illuminates the exterior surface of the electromagnetic barrier with radiated CW fields and surveys the interior protected volume to identify shield defects and inadequately protected aperture POEs and to provide data for hardness assessment. Both horizontally and vertically polarized transmitting antennas must be used to provide the illuminating fields. Because coupling to exposed external portions of penetrating conductors may not be efficient, CW immersion has limited effectiveness for evaluating conductive POE protection. Therefore, protection provided for penetrating conductors is also evaluated with pulsed current injection (PCI) testing (see Appendix B).

C.4.2 Purpose. The purposes of CW immersion testing are as follows:

a. To measure attenuation of electromagnetic fields in the HEMP portion of the spectrum by linear elements of the as-built electromagnetic barrier.

b. To identify HEMP shield and aperture POE protective device defects, faulty installation practices, and inadvertent POEs, so that repairs can be made.

c. To characterize residual internal field and conducted electromagnetic stresses, within limitations of the linearity and planarity assumptions, through post-test analysis.

d. To observe operation of the facility for interference or upset (interference which occurs as the result of the low-level CW excitation may indicate a circuit which is particularly vulnerable to HEMP effects).

e. To provide data for HEMP hardness assessment of the facility and baseline data for the hardness maintenance/hardness surveillance program.

C.4.3 HEMP protection subsystem test configuration. During conduct of the CW immersion test, the facility shall be in a normal operating configuration and shall be performing actual or simulated mission functions. The HEMP protection subsystem shall be intact.

Downloaded from http://www.everyspec.com

C.4.4 Pretest analysis requirements. Pretest analysis shall be performed to select transmitting antenna locations, reference sensor locations, and measurement points. Transmitting antenna locations shall be chosen to obtain the required illuminating field strength and efficient coupling to all areas on the electromagnetic barrier surface. Reference sensor locations shall be chosen to monitor the transmitting antenna output and determine the illuminating field. Measurement points shall be chosen to provide representative mappings of field responses within the protected volume and special protective volumes and current responses within the internal cable plant.

C.4.5 Test equipment requirements. Test equipment required for CW immersion testing is identified in table C-I.

C.4.6 Operational impact analysis and risk. Since the electromagnetic barrier must remain intact during conduct of the CW immersion test and use of electrically noisy equipment which is not part of the normal site equipment complement must be restricted, unusual operations (facility modification, maintenance) may be affected. Mission operations can continue normally, except that a special sequence of activities may be required so that the facility can be tested in its various operating states (transmitting, receive-only, etc.). Radiated signal levels are low and present no hazard to equipment, but frequency clearance and bands in which transmissions must be suppressed may be required to avoid self-interference or interference with nearby facilities. Normal electrical safety precautions apply.

C.4.7 Test plan and procedures. A comprehensive, site-specific test plan and detailed test procedures for CW immersion testing shall be prepared. These may be combined into a single document, or two separate documents may be used. As a minimum, the test documentation shall contain the following information:

a. A statement of the test objectives.

b. Facility identification and description (including a site plan, floor plan of the protected volume, list of shield POEs, list of mission-critical equipment inside and outside the electromagnetic barrier, and a description of the HEMP protection subsystem).

c. Transmitting antenna locations, reference sensor locations, and expected measurement sensitivity of the illumination and instrumentation system.

d. CW illumination and data acquisition equipment identification (including manufacturer, model and serial numbers, characteristics, and detailed calibration procedures).

Downloaded from http://www.everyspec.com

APPENDIX C

TABLE C-I. CW immersion test equipment requirements.

Equipment	Characteristics
Network Analyzers or Equivalent[1]	100 kHz–1 GHz, minimum sensitivity as required for measurement sensitivity
Power Amplifiers[2]	100 kHz–1 GHz, amplification as required for measurement sensitivity
Antennas[3]	100 kHz–1 GHz
Sensors	Free-field, surface current, charge density, and current; 100 kHz–1 GHz
Preamplifiers[4]	100 kHz–1 GHz, amplification and noise figure as required for measurement sensitivity
Data Recorder[1]	Multi-channel
Fiber Optic Links[5]	100 kHz–1 GHz, up to 100 meters in length
Miscellaneous Cables and Attenuators	As required

[1]Use of a personal computer with an IEEE-488 general purpose interface bus (GPIB), or equivalent, to control the network analyzer, the fiber optic (F/O) links, preamplifiers, and data acquisition (including storage of test data on magnetic disk or tape) is strongly recommended.

[2]Typically, several linear power amplifiers are required; for example, 150 W (or greater) for 100 kHz–220 MHz, and 10 W for 200 MHz–1 GHz.

[3]In order to cover a broad frequency range, several transmitting antennas may be required. Examples are horizontal dipoles and vertical monopoles for frequencies up to 50 MHz and various log-periodic antennas for both polarizations for frequency ranges such as 30 MHz–100 MHz and 90 MHz to 1 GHz.

---

e. Detailed test procedures (including facility configuration requirements, equipment operating states, diagrams of the test configuration, step-by-step procedures, and measurement point locations).

f. Any deviations from the requirements of this Appendix.

g. Data management (including data quality control procedures, data acceptability criteria, data processing requirements, annotation and preservation of data records, and pass/fail criteria).

Downloaded from http://www.everyspec.com

h. Safety, including electromagnetic radiation and electrical shock hazards.

i. Security (see C.4.10).

j. Test schedule (including priority of measurements).

Data item description DI-NUOR-80928, "Nuclear Survivability Test Plan", shall be used.

C.4.8 Test report requirements. A CW immersion test report shall be prepared. As a minimum, the test report shall contain the following information:

a. Facility identification and reference to the applicable test plan.

b. A discussion of any deviations from the test plan and requirements of this Appendix.

c. Copies of the measured results, along with sensor calibrations and instrumentation settings required to convert the data to engineering units. Ideally, the data are acquired with an automated (and calibrated) data acquisition system which automatically folds in any calibration factors, gain, or attenuation settings. In this case, processed data can be provided in place of the directly measured results.

d. Test conclusions based on CW immersion and PCI test results and supporting analysis. A definitive statement of HEMP hardness of mission functions will be made based on the conclusions of the complete battery of verification tests (including PCI and CW immersion).

e. Test chronology – including a sequence of events and identification of failures observed and the conditions under which they occurred.

Data item description DI-NUOR-80929A, "Nuclear Survivability Test Report," shall be used.

C.4.9 Post-test analysis requirements. A post-test analysis of the measured data shall be performed to assist in developing a definitive statement of facility HEMP hardness. Detailed requirements for post-test analyses of verification test results will be established by the sponsoring agency for the test. They will generally include calculations of threat responses from CW immersion and PCI test data, analysis of verification test adequacy, development of hardness conclusions, and recommendations for corrective action, if required.

C.4.10 Data classification. Test data may be classified. DNA-EMP-1 and the classification guide for the specific facility or system should be consulted for guidance.

Downloaded from http://www.everyspec.com

C.4.11 Alternative test methods. Other types of illumination, such as wide band noise or repetitive pulsed field radiation, can be substituted for CW illumination if equivalent frequency coverage and measurement range can be achieved. The test plan and detailed test procedures shall define the illumination approach, source strength, transmitting antenna positions, and predicted shield current density distributions. Adequate data acquisition system sensitivity for verifying the HEMP protection subsystem effectiveness and making pass/fail determinations shall be demonstrated.

When CW illumination of a facility is not practical because of physical interference with other facilities in the vicinity, the CW test may be performed using CW current injection on the outer surface of the electromagnetic barrier. A site-specific CW shield current injection test plan and detailed procedures shall define the shield excitation technique, source strength, injection points, and predicted shield current density distributions. Adequate data acquisition system sensitivity for verifying the HEMP protection subsystem effectiveness and making pass/fail determinations shall be demonstrated.

When approved by the sponsoring agency, a thorough program of shielding effectiveness measurements (Appendix A) and a thorough SELDS survey IAW MIL-HDBK-423 guidance may be used for verification testing in lieu of the CW immersion test.

C.5. DETAILED REQUIREMENTS

C.5.1 Test configuration. A typical CW immersion test configuration is illustrated in figure C-1. Swept or stepped CW excitation, generated by the network analyzer source, is propagated to the transmitting antenna location via a hardwired or fiber optic link. The signal is amplified and radiated from the antenna (a vertical monopole, horizontal dipole, log periodic, rhombic or other antenna) to illuminate the facility. The reference sensor, located in a clear area where the measured field has a known relationship to the total field illuminating the facility, monitors the source output. Free-field, surface current or charge density, and current sensors monitor the response at measurement points inside (and outside, if desired) the electromagnetic barrier. Preamplifiers and fiber optic links are used, as required, in the measurement channels. Reference and measurement point data are monitored on the network analyzer and recorded. Figure C-2 illustrates a sample 1 MHz to 100 MHz data record, where identical B-dot (time rate of change of the magnetic induction field) sensors are employed in both channels and the reference channel is a direct measurement of the illuminating field.

C.5.2 Transmitting antenna locations. Transmitting antenna locations shall be chosen to illuminate all areas on the barrier surface with the radiated field excitation. Three or four locations around the periphery of the facility will normally be required. The antenna shall be

Downloaded from http://www.everyspec.com

APPENDIX C

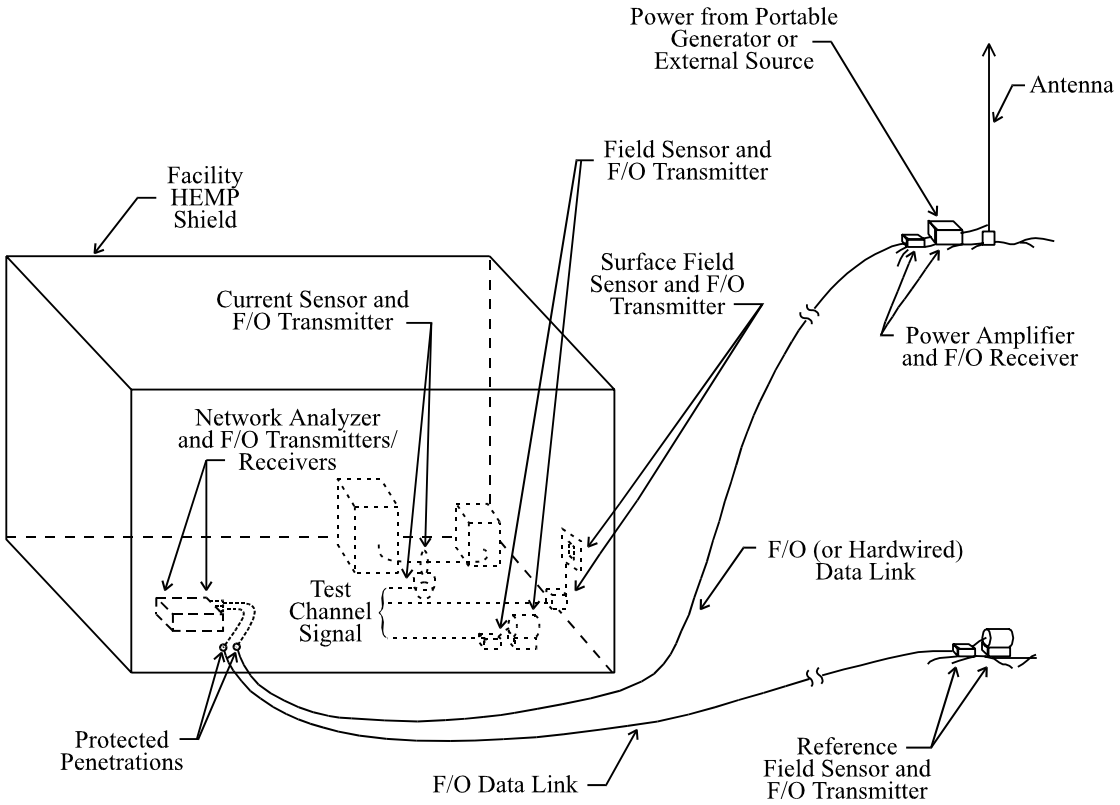

FIGURE C-1. CW immersion testing.

Downloaded from http://www.everyspec.com

APPENDIX C

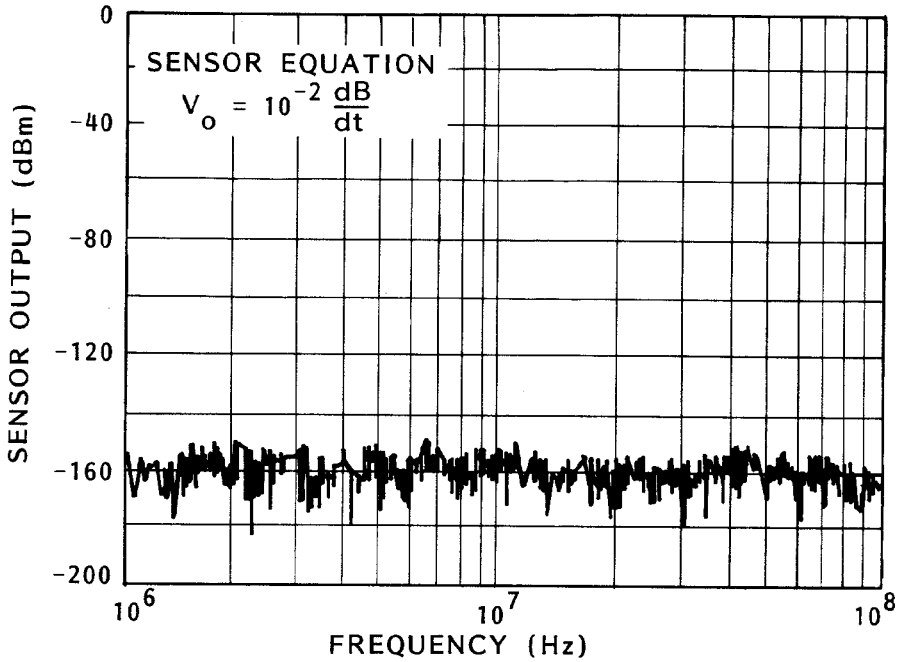

a. Noise/operating signal response.

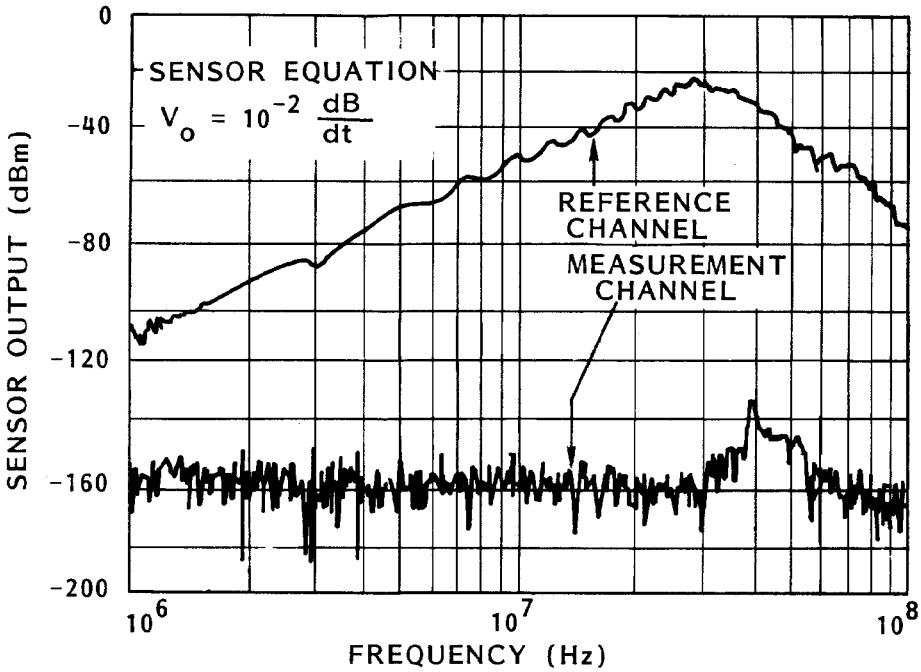

b. Reference and measurement point responses.

FIGURE C-2. CW immersion test record.

Downloaded from http://www.everyspec.com

placed as far from the facility as possible, within physical and measurement sensitivity constraints.[16]

C.5.3 Measurement locations. For facilities less than 900 m^2 (10,000 ft^2) in shielded floor area, a minimum of 5 (×3 orthogonal components) electric or magnetic free-field measurement locations, 3 (×2 orthogonal components) surface current or 3 charge density measurement locations, and 20 current measurement locations throughout the shielded volume shall be chosen for each transmitting antenna location. For larger facilities, the number of measurement locations shall be increased in proportion to the total shielded floor area.

Measurement points for each transmitting antenna location should be concentrated in the 40 to 50 percent of the protected volume and in special protective volumes physically closest to electromagnetic barrier surfaces that are directly illuminated.

Internal free-field measurement points shall be chosen to provide a representative mapping of field responses within the electromagnetic barrier. The free-field measurements shall be made in areas that are relatively clear of equipment. The three orthogonal components of the field response shall be recorded. Internal magnetic free-field measurements should normally be emphasized.

Internal surface current or charge density measurements shall principally be made at penetration areas on the electromagnetic barrier. Internal surface current density measurements should normally be emphasized. When measuring surface current density, the two orthogonal components of the response shall be recorded.

Internal current measurement points shall be chosen to provide a representative mapping of current responses in the internal cable plant. Current measurements shall be made on selected penetrating cables near their POE protective devices, on selected cables with long interior runs or layouts producing efficient coupling geometries, and on input cables to selected mission-critical equipment.

An interior electromagnetic survey, with CW excitation applied from each transmitting antenna location, shall be performed to locate areas of maximum response. Particular attention should be given to barrier penetration areas. Additional free-field and current measurement points shall be chosen where the largest signals are detected during the survey.

---

[16]Results can be interpreted as plane wave responses when $R > \lambda_{MAX}$ and $R > 2D^2/\lambda_{MIN}$ – where R is the distance from the antenna to the barrier, λ_{MAX} is the wavelength of the lowest radiated frequency, λ_{MIN} is the wavelength of the highest radiated frequency, and D is the antenna characteristic length or largest barrier dimension transverse to the propagation direction of the illuminating field. For typical CW immersion test geometries, these inequalities are simultaneously satisfied at frequencies from approximately 5 MHz to approximately 400 MHz. When these inequalities are not satisfied, near-field and wave curvature effects may be significant.

Downloaded from http://www.everyspec.com

C.5.4 Test frequencies. Test data are desired at frequencies from 100 kHz to 1 GHz. It is usually necessary to divide the frequencies into several bands, selecting different antennas to maximize the radiation efficiency in the different bands.

C.5.5 Measurement procedures. CW immersion test procedures shall be as follows:

a. Set up the data acquisition equipment in the desired configuration and perform calibrations. Minimum sensitivity of the data acquisition system should be –147 dBm or lower.

b. Set up the transmitting antenna, choose a reference sensor location, and map the fields. The principal component of the illuminating field[17] should be at least 1 V/m from 1 MHz to 50 MHz and at least 0.1 V/m from 50 MHz to 100 MHz at the point on the electromagnetic barrier closest to the transmitting antenna. As a design objective, the principal component of the illuminating field should be at least 0.1 V/m from 100 kHz to 1 MHz and 0.01 V/m from 100 MHz to 1 GHz.

c. Perform a check of each data acquisition channel to verify link noise immunity. Disconnect the sensor and terminate the sensor cable in its characteristic impedance. Energize the radiating source, and record the received signal strength as a function of frequency.

d. With the radiating source energized, perform a survey of the area to be monitored and select the additional measurement locations.

e. Place the sensors and use preamplifiers as required to obtain the desired measurement sensitivity.

f. With the source and data acquisition equipment in a normal configuration, except that the power amplifier is turned off, record the noise and operating signal response at the measurement point as a function of frequency. Narrow band filter and long sweep time settings of the network analyzer are necessary.

g. Turn the power amplifier on and record the reference and measurement point responses as a function of frequency, using the same filter and sweep time settings employed for the noise and operating signal measurement.

h. Perform data quality control. Annotate and preserve the data records.

---

[17]The illuminating field is expressed as $c \times B_{\text{illuminating}}$ or $E_{\text{illuminating}}$, where c equals the speed of light, $B_{\text{illuminating}}$ equals the magnetic induction field, and $E_{\text{illuminating}}$ equals the electric field.

Downloaded from http://www.everyspec.com

i. Record any interference with the operation of facility equipment observed during the CW immersion test. Also record test and operational conditions that existed at the time the interference was noted.

j. Continue to the next measurement location and repeat steps e through i.

k. When measurements for one transmitting antenna location are completed, continue to the next transmitting antenna location and repeat steps b through j.

C.5.6 Pass/fail criteria.[18]

C.5.6.1 Internal field measurements. In frequency bands where the measurement dynamic range is less than the required attenuation, internal CW immersion free-field and surface current or charge density measurements shall be considered satisfactory when there is no observable test point response above the noise and operating signal level.

In the frequency band where the measurement dynamic range is greater than the required attenuation (expected to be at least 5 MHz to 1 GHz), internal CW immersion field measurements shall be considered satisfactory when the test point responses are below the principal component of the illuminating field by at least the required attenuation. This success criterion is expressed by the following equations:

C.5.6.1.1 For internal magnetic induction field measurements.

$$B_{\text{internal}}(\omega) \leq A(\omega) \times B_{\text{illuminating}}(\omega)$$

where

f = frequency (Hz)

ω = angular frequency (s^{-1})
= $2\pi f$

[18]These pass/fail criteria apply to all measurements made in the protected volume. Responses measured in a special protective volume must not exceed design values for that special protective volume.

Downloaded from http://www.everyspec.com

$B_{internal}(\omega)$ = measured component of the magnetic induction field at a test point inside the electromagnetic barrier (Wb/m^2/Hz)

$A(\omega)$ = minimum attenuation requirement as a function of frequency f

$$= \frac{10^3}{f} \qquad 10^5\ Hz \le f \le 10^7\ \text{Hz}$$

$$= 10^{-4} \qquad 10^7\ \text{Hz} < f \le 10^9\ \text{Hz}$$

$B_{illuminating}(\omega)$ = principal component of the illuminating magnetic induction field at the point on the electromagnetic barrier closest to the transmitting antenna (Wb/m^2/Hz)

C.5.6.1.2 <u>For internal electric field measurements</u>.

$$E_{internal}(\omega) \le A(\omega) \times E_{illuminating}(\omega)$$

where

$E_{internal}(\omega)$ = measured component of the electric field at a test point inside the electromagnetic barrier (V/m/Hz)

$E_{illuminating}(\omega)$ = principal component of the illuminating electric field at the point on the electromagnetic barrier closest to the transmitting antenna (V/m/Hz)

C.5.6.1.3 <u>For internal surface current density measurements</u>.

$$J_{S_{internal}}(\omega) \le \frac{A(\omega)}{\mu_0} \times B_{illuminating}(\omega)$$

where

$J_{S_{internal}}(\omega)$ = measured surface current density at a test point inside the electromagnetic barrier (A/m/Hz)

Downloaded from http://www.everyspec.com

μ_0 = permeability of free space
= $4\pi \times 10^{-7}$ H/m

C.5.6.1.4 For internal surface charge density measurements.

$$Q_{S_{internal}}(\omega) \leq A(\omega) \times \epsilon_0 \times E_{illuminating}(\omega)$$

where

$Q_{S_{internal}}(\omega)$ = measured surface charge density at a test point inside the electromagnetic barrier ($C/m^2/Hz$)

ϵ_0 = permittivity of free space
= 8.85×10^{-12} F/m

C.5.6.2 Internal current measurements. Internal CW immersion current measurements shall be considered satisfactory when the peak value of the threat-extrapolated response, transformed into the time domain, does not exceed 0.1 amperes and the peak derivative does not exceed 10^7 A/s. These success criteria are expressed by the following equations:

$$\left| \frac{1}{2\pi} \int_{2\pi f_l}^{2\pi f_u} \left[I_{threat}(\omega) e^{-i\omega t} + I^*_{threat}(\omega) e^{i\omega t} \right] d\omega \right| \leq 0.1$$

$$\left| \frac{1}{2\pi} \int_{2\pi f_l}^{2\pi f_u} \left[I_{threat}(\omega) e^{-i\omega t} - I^*_{threat}(\omega) e^{i\omega t} \right] \omega \, d\omega \right| \leq 10^7$$

for all time t, where

f_ℓ = the lowest CW immersion test frequency (Hz)

f_u = the highest CW immersion test frequency (Hz)

$I_{threat}(\omega)$ = threat-extrapolated current in the frequency domain (A/Hz)

$$= \frac{I_{internal}(\omega)}{E_{illuminating}(\omega)} \times E_{threat}(\omega)$$

Downloaded from http://www.everyspec.com

or

$$= \frac{I_{\text{internal}}(\omega)}{B_{\text{illuminating}}(\omega)} \times B_{\text{threat}}(\omega)$$

$I_{\text{internal}}(\omega)$ = measured current at a test point inside the electromagnetic barrier (A/Hz)

$E_{\text{threat}}(\omega)$ = early-time HEMP threat electric field in the frequency domain (V/m/Hz) (see MIL-STD-2169)

$B_{\text{threat}}(\omega)$ = early-time HEMP threat magnetic induction field in the frequency domain (Wb/m^2/Hz) (see MIL-STD-2169)

$I^*_{\text{threat}}(\omega)$ = complex conjugate of $I_{\text{threat}}(\omega)$

C.5.6.3 Interference. Functional monitoring of facility operation shall be considered satisfactory when no interference with mission-critical communication-electronics or support equipment is observed.

C.5.6.4 Test failures. Any failure to satisfy the internal field measurement, internal current measurement, or interference success criteria shall be considered a HEMP vulnerability. An investigation into the cause of the possible vulnerability shall be conducted. The condition shall be corrected, if possible, and the CW immersion test sequence shall be repeated.

Downloaded from http://www.everyspec.com

Custodians:
Army-CR
Navy-EC
Air Force-90
DISA - DC1
NSA - NS

Preparing activity:
DSWA - DS

(Project IXMP-00371)

Review Activities:
OASD-IQ,SE
Army-AC,PT
Navy-CG,MC,NC,OM,TD
Air Force-02,13,17,19,21,29,33,93
DIA-DI
DISA-DC4
DLA-DH
DMA-MP
JSC-JS
USSPACECOM-US

Civil Agencies Coordinating Activities:
TRANSPORTATION-OST

Downloaded from http://www.everyspec.com

STANDARDIZATION DOCUMENT IMPROVEMENT PROPOSAL

INSTRUCTIONS

1. The preparing activity must complete blocks 1, 2, 3, and 8. In block 1, both the document number and revision letter should be given.
2. The submitter of this form must complete blocks 4, 5, 6, and 7.
3. The preparing activity must provide a reply within 30 days from receipt of the form.

NOTE: This form may not be used to request copies of documents, nor to request waivers, or clarification of requirements on current contracts. Comments submitted on this form do not consititute or imply authorization to waive any portion of the referenced document(s) or to amend contractual requirements.

I RECOMMEND A CHANGE:	1. DOCUMENT NUMBER MIL-STD-188-125-1	2. DOCUMENT DATE (*YYMMDD*) 980717

3. DOCUMENT TITLE High-Altitude Electromagnetic Pulse (HEMP) Protection for Ground-Based C^4I Facilities Performing Critical, Time-Urgent Missions; Part 1: Fixed Facilities

4. NATURE OF CHANGE (*Identify paragraph number and include proposed rewrite, if possible. Attach extra sheets as needed.*)

5. REASON FOR RECOMMENDATION

6. SUBMITTER

a. NAME (*Last, First, Middle Initial*)	b. ORGANIZATION	
c. ADDRESS (*Include Zip Code*)	b. TELEPHONE (*Include Area Code*) (1) Commercial (2) AUTOVON (*If applicable*)	7. DATE SUBMITTED (*YYMMDD*)

8. PREPARING ACTIVITY

a. NAME Defense Special Weapons Agency	b. TELEPHONE (*Include Area Code*) (1) Commercial (703) 325-7016	(2) AUTOVON 221-7016
c. ADDRESS (*Include Zip Code*) Attention: Mr. M. Rooney, DSWA/ESE 6801 Telegraph Road Alexandria, VA 22310-3398	IF YOU DO NOT RECEIVE A REPLY WITHIN 45 DAYS, CONTACT: Defense Quality and Standardization Office 5203 Leesburg Pike, Suite 1403, Falls Church VA 22041-3466 Telephone (703) 756-2340 AUTOVON 289-2340	