Downloaded from http://www.everyspec.com

NOT MEASUREMENT SENSITIVE

MIL-STD-188-220C
22 May 2002
SUPERSEDING
MIL-STD-188-220B
20 January 1998
MIL-STD-188-220A
27 July 1995
MIL-STD-188-220
7 May 1993

DEPARTMENT OF DEFENSE INTERFACE STANDARD

DIGITAL MESSAGE TRANSFER DEVICE SUBSYSTEMS

AMSC N/A

AREA TCSS

DISTRIBUTION STATEMENT A. Approved for public release; distribution is unlimited.

Downloaded from http://www.everyspec.com

FOREWORD

This military standard (MIL-STD) is approved for use by all Departments and Agencies of the Department of Defense (DoD). It applies to all inter- and intra-Department of Defense (DoD) digital message transfer devices (DMTDs) and command, control, communications, computers and intelligence (C^4I) systems that exchange information with DMTDs.

This standard contains technical parameters for the data communications protocols that support DMTD interoperability. It provides mandatory system standards for planning, engineering, procuring, and using DMTDs in tactical digital communications systems. This standard specifies the lower layer (Physical through Intranet) protocol for interoperability of C^4I systems over combat net radio (CNR) on the battlefield. This standard provides the information required to pass digital data via CNR on the battlefield.

The Preparing Activity (PA) for this standard is USACECOM, ATTN: AMSEL-SE-CD (Mr. R. Menell), Fort Monmouth, NJ 07703. The custodians for the document are identified in the Defense Standardization Program, "Standardization Directory (SD-1)" under Standardization Area Telecommunications Systems Standards (TCSS).

Beneficial comments (recommendations, additions, deletions) and any pertinent data that may be of use in improving this MIL-STD should be addressed to the PA at the above address by using the Standardization Document Improvement Proposal (DD Form 1426) appearing at the end of this document or by letter.

Downloaded from http://www.everyspec.com

FOREWORD ii

1. SCOPE 1
1.1 Purpose 1
1.2 Scope 1
1.3 Application guidance 1
1.4 System standards and design 1

2. APPLICABLE DOCUMENTS 2
2.1 General 2
2.2 Government documents 2
2.2.1 Specifications, standards, and handbooks 2
2.2.2 Other Government documents, drawings, and publications 2
2.3 Non-Government publications 3
2.3.1 International Organization for Standardization (ISO) 3
2.3.2 International Telecommunications Union (ITU) 3
2.3.3 Internet Architecture Board (IAB) Standards 3
2.3.4 Other 4
2.4 Order of precedence 4

3. DEFINITIONS 5
3.1 Definitions of terms 5
3.2 Abbreviations and acronyms 5

4. GENERAL REQUIREMENTS 9
4.1 Digital message transfer device 9
4.2 Interoperability 9
4.3 Framework 9
4.4 DMTD capabilities 11

5. DETAILED REQUIREMENTS 13
5.1 Physical layer 13
5.1.1 Transmission channel interfaces 13
5.2 Physical-layer protocol 13
5.2.1 Physical-layer protocol data unit (PDU) 13
5.2.1.1 Communications security preamble and postamble 14
5.2.1.2 Phasing 14
5.2.1.3 Transmission synchronization field 14
5.2.1.4 Data field 19
5.2.1.5 Bit synchronization field 20

Downloaded from http://www.everyspec.com

5.2.2 Network access control (NAC) related indications 20
5.2.3 Physical-layer to upper-layer interactions 20
5.3 Data link layer....21
5.3.1 Transmission header....21
5.3.1.1 Selection bits....22
5.3.1.2 Topology update identifier 22
5.3.1.3 Transmission queue field....22
5.3.2 Network access control (NAC) 25
5.3.2.1 Scheduler....25
5.3.3 Types of procedures 26
5.3.3.1 Type 1 operation....26
5.3.3.2 Type 2 operation....26
5.3.3.3 Type 3 operation....26
5.3.3.4 Type 4 operation....26
5.3.3.5 Station class....26
5.3.4 Data link frame....27
5.3.4.1 Types of frames 27
5.3.4.2 Data link frame structure....27
5.3.4.3 Data link PDU construction....40
5.3.5 Operational parameters 41
5.3.5.1 Type 1 operational parameters 41
5.3.5.2 Type 2 operational parameters 41
5.3.5.3 Type 4 operational parameters 42
5.3.6 Commands and responses....43
5.3.6.1 Type 1 operation commands and responses....43
5.3.6.2 Type 2 operation commands and responses....45
5.3.6.3 Type 4 operation commands and responses....52
5.3.7 Description of procedures by type 53
5.3.7.1 Description of type 1 procedures....53
5.3.7.2 Description of type 2 procedures....56
5.3.7.3 Description of type 4 procedures....66
5.3.8 Data link initialization....68
5.3.8.1 List of data link parameters....68
5.3.9 Frame transfer....72
5.3.9.1 PDU transmission....72
5.3.9.2 Data link concatenation 72
5.3.9.3 Physical-layer concatenation....73
5.3.9.4 PDU transmissions 74
5.3.10 Flow control 74
5.3.10.1 Type 1 flow control....74

Downloaded from http://www.everyspec.com

5.3.10.2 Type 2 flow control....75
5.3.10.3 Type 4 flow control....75
5.3.11 Acknowledgment and response....75
5.3.11.1 Acknowledgment....75
5.3.11.2 Quiet mode....76
5.3.11.3 Immediate retransmission....76
5.3.12 Invalid frame....76
5.3.13 Retransmission....77
5.3.14 Error detection and correction (EDC)....77
5.3.14.1 Forward-error-correction coding....77
5.3.14.2 Forward-error-correction preprocessing....77
5.3.14.3 Time-dispersive coding (TDC)....78
5.3.15 Data scrambling....79
5.3.16 Data link layer interactions....81
5.4 Network layer....85
5.4.1 Intranet protocol....85
5.4.1.1 Intranet header....85
5.4.1.2 Topology update....89
5.4.1.3 Topology update request message....92
5.4.1.4 Intranet layer (IL) interactions....92
5.4.2 Subnetwork Dependent Convergence Function (SNDCF)....94
5.4.2.1 Determine destination function....95
5.4.2.2 Address mapping function....95
5.4.2.3 Type of service (TOS) function....96
5.4.2.4 Intranet send request....96

6. NOTES....97
6.1 Subject term (key word) listing....97
6.2 Issue of the DoD index of specifications and standards....97
6.3 Interoperability considerations....97
6.3.1 Transmission channel....97
6.3.2 Physical interface....98
6.3.2.1 SINCGARS system improvement program (SIP) R/T interface....98
6.3.2.2 SINCGARS integrated COMSEC (ICOM) R/T interface....100
6.3.2.3 HAVEQUICK II R/T interface....101
6.3.2.4 COMSEC interoperability....102
6.3.3 Data link layer....102
6.3.4 Intranet layer....103
6.3.5 CNR management process....104
6.3.6 Interoperation with internet protocols (IPs)....104

Downloaded from http://www.everyspec.com

TABLE

I. Robust frame format....17
II. Multi-dwell transmission format....17
III. Convolutional coding constraint length codes....17
IV. Type 1 PDU formats....34
V. Type 2 PDU formats....35
VI. Type 4 PDU formats....37
VII. Network layer to data link layer precedence mapping....84
VIII. Mapping intranet TOS field to data link TOS....84
IX. Intranet message types....86
X. Relay types....88
XI. Topology link quality values....91
XII. Hop length values....92
XIII. SINCGARS ICOM receive states....101
XIV. Calculation of the load factor....270
XV. Calculation of the load factor - example 1....272
XVI. Calculation of the load factor - example 2....273
XVII. Forwarding header....295
XVIII. Message and Block structure....295
XIX. XNP messages....296
XX. XNP data blocks....296
XXI. Terminator block....297
XXII. Join request message....298
XXIII. Join accept message....299
XXIV. Join reject message....300
XXV. Hello message....300
XXVI. Goodbye message....301
XXVII. Parameter update request message....301
XXVIII. Parameter update message....302
XXIX. Delay time message....303
XXX. Status notification message....303
XXXI. Station ID....304
XXXII. Basic network parameters....305
XXXIII. MAC parameters....306
XXXIV. Type 3 parameters....307
XXXV. Deterministic NAD parameters....308
XXXVI. Probabilistic NAD parameters....309
XXXVII. RE-NAD parameters....309
XXXVIII. Wait time....310

Downloaded from http://www.everyspec.com

XXXIX. Type 2 parameters 311
XL. Type 4 parameters 312
XLI. NAD ranking 313
XLII. Intranet parameters 313
XLIII. Error 314
XLIV. Address designation parameters 314
XLV. XNP join request message 322
XLVI. XNP parameter update message with data blocks 324
XLVII. XNP join accept message 328
XLVIII. XNP hello message 334
XLIX. XNP join request message to network controller 339
L. XNP join request message to global multicast address 341
LI. XNP delay time message 343
LII. XNP join request message to forwarder 345
LIII. XNP join request message to network controller from forwarder 347
LIV. XNP parameter update message 349
LV. XNP join accept message to forwarder 354
LVI. XNP hello message from joiner 362
LVII. XNP hello message from forwarder 364
LVIII. Example of VMF message data construction 376
LIX. Example construction of the application header 381
LX. Example of a unit name as originator 384
LXI. Example construction of UDP header 389
LXII. Octet representation of UDP header 389
LXIII. Example construction of IP header 393
LXIV. Example construction of intranet header (minimum) 395
LXV. Example construction of data link frame header 399
LXVI. Example construction of data link frame trailer 400
LXVII. Octets comprising data link layer frame 401
LXVIII. Example construction of data link transmission header 405
LXIX. Topology table for node A 412
LXX. Sparse routing tree for node A 413
LXXI. Final routing tree for node A 414
LXXII. Sample node addresses 419
LXXIII. Paths used in example 3 424
LXXIV. Convolutional coding generator polynomials (octal) 432
LXXV. Maximum supported BER 438
LXXVI. Multi-dwell overhead 439
LXXVII. Multi-dwell acknowledgment times for Hop_All assumptions 441
LXXVIII. Robust protocol example with the multi-dwell flag set 447

Downloaded from http://www.everyspec.com

LXXIX. Robust protocol example with the multi-dwell flag not set 459
LXXX. Characteristic frequencies of FSK interface for voice frequency channels 473
LXXXI. Characteristic frequencies of FSK interface for single-channel radio 474

FIGURE

1. Standard interface for DMTD subsystems 9
2. DMTD functional reference model 10
3. Basic structure of DMTD protocol data units at the standard interface 11
4. Transmission frame structure 14
5. Transmission synchronization field 15
6. Frame synchronization subfield 16
7. Robust frame synchronization subfield 16
8. Packet mode transmission synchronization field 19
9. Transmission header 22
10. Transmission queue field formats 23
11. Data link frame structure and placement 28
12. Extended address field format 30
13. Address allocation 30
14. Data link PDU control field formats 38
15. Type 1 operation control-field bit assignments 44
16. Information-transfer-format control field bits 46
17. Supervisory-format control field bits 47
18. Unnumbered-format control field bits 49
19. FRMR information field format 51
20. Type 4 DIA PDU control field bit assignments 52
21. Type 4 S PDU control field bit assignments 53
22. Data link concatenation 73
23. Physical-layer concatenation 74
24. 16 x 24 matrix before interleaving 78
25. Transmitter's 24 x 16 matrix after interleaving 79
26. Required CCITT V.36 scrambling/descrambling operation 80
27. Example implementation of CCITT V.36 81
28. Intranet header 85
29. Destination/Relay status byte 87
30. Topology update data structure 90
31. Node status byte 90
32. Network timing model 256
33. Turnaround time (TURN) calculation 259
34. DAP-NAD example key 278
35. DAP-NAD example 279

Downloaded from http://www.everyspec.com

36. Traditional COMSEC transmission frame structure 287
37. COMSEC frame synchronization pattern for Phi encoding.....288
38. Embedded COMSEC transmission frame structure.....290
39. XNP message format 293
40. Example 4-octet XNP data field 293
41. UI frame containing XNP message 315
42. Joining concept 316
43. Joining a centralized network 318
44. Joining a fully connected, centralized network.....320
45. Joining a disconnected, centralized network 335
46. Shift register encoder for the (23, 12) Golay code.....367
47. Kasami error-trapping decoder for the (24, 12) Golay code.....368
48. Generator matrix G 370
49. Matrix T 371
50. PDU construction.....373
51. VMF message services interaction with other communication layers.....374
52. Exchange of message data between communication layers.....375
53. Serial Representation of PDU.....377
54. Application layer interaction with other communication layers 378
55. Exchange of application layer PDU between communication layers.....379
56. Application header (octets).....384
57. Transport layer interaction with other communication layers.....386
58. Exchange of transport layer PDU between communication layers.....387
59. UDP header.....387
60. Octet representation of UDP header.....388
61. Serial representation of UDP header.....390
62. Network layer interaction with other communication layers.....390
63. Exchange of network layer PDU between communication layers.....391
64. IP header.....391
65. Octet representation of IP header 394
66. Intranet header.....395
67. Serial representation of network layer PDU 396
68. Data link layer interaction with other communication layers.....397
69. Exchange of data link layer PDU between communication layers 398
70. Data link layer PDU 398
71. Serial representation of data link layer PDU 403
72. Data before zero bit insertion in transmission order.....404
73. Serial representation of physical layer transmission unit 407
74. Sample intranet 409
75. Link diagram of sample network.....410

Downloaded from http://www.everyspec.com

76. Routing tree for nodes A and C 410
77. Concatenated routing tree for node A 411
78. Sparse routing tree for node A 413
79. Final routing tree for node A 414
80. Link diagram of sample network 418
81. Final routing tree for node A 419
82. Example 1 intranet header 421
83. Example 2 intranet header 423
84. Example 3 intranet header created by node A (originator) 426
85. Example 3 intranet header for node C (relay node) 429
86. Example 3 intranet header created by node F (relay and destination nodes) 430
87. Convolutional encoder with inverted G2 K=3 432
88. Rate 1/3 convolutional coding performance for constraint lengths 3, 5, and 7 433
89. Data scrambler structure 434
90. Multi-dwell packet 435
91. Multi-dwell 64-bit SOP pattern 435
92. Multi-dwell 32-bit SOP pattern 435
93. Two transmission examples 437
94. HAVEQUICK II external crypto acknowledgment transmission 443
95. Link data rate as a function of message size 444
96. Shift register encoder for the BCH (15, 7) code 463
97. Encoding example 464
98. Robust frame format encoding example 466
99. BCH (15, 7) majority logic decoding 468
100. BCH (15,7) parity check matrix 469
101. BCH (15,7) generator matrix 469

Appendix A 106
A.1. General 106
A.1.1 Scope 106
Appendix B 107
B.1 General 107
B.1.1 Scope 107
B.1.2 Application 108
B.2 Applicable documents 108
B.3 Notation 108
B.4 Implementation requirements 109
B.5 Detailed Requirements 109
B.5.1 Physical Layer 109
ANNEX A (normative) 110

Downloaded from http://www.everyspec.com

A.1 MIL-STD-188-220C Profile Protocol Stack....110
A.2 Implementation Identification....110
A.2.1 Protocol Summary....110
A.3 CNR Requirements List....111
A.3.1 Basic Requirements....111
A.4 Physical Layer DPRL....111
A.4.1 Transmission Channel Interfaces....111
A.4.2 Physical Layer Protocol....112
A.5 Data Link Layer DPRL....116
A.5.1 Transmission Header....117
A.5.2 Net Access Control (NAC)....118
A.5.3 Types of Procedures....120
A.5.4 Data Link Frame....121
A.5.5 Operational Parameters....132
A.5.6 Commands and Responses....137
A.5.7 Description of Procedures by Type....148
A.5.8 Data Link Initialization....179
A.5.9 Frame Transfer....187
A.5.10 Flow Control....188
A.5.11 Acknowledgement and Response....189
A.5.12 Invalid Frame....191
A.5.13 Retransmission....191
A.5.14 Error Detection and Correction....192
A.5.15 Data Scrambling....194
A.5.16 Data Link Layer Interactions....195
A.6 Network Layer DPRL....196
A.6.1 Intranet Protocol....196
A.6.2 Subnetwork Dependent Convergence Function (SNDCF)....203
A.7 Appendixes....203
A.7.2 Network Access Control Algorithm (NAC)....204
A.7.3 Communications Security Standards....221
A.7.4 CNR Management Processes....226
A.7.5 Golay Coding Algorithm....234
A.7.6 Packet Construction and Bit Ordering....235
A.7.7 Intranet Topology Update....236
A.7.8 Source Directed Relay....237
A.7.9 Robust Communications Protocol....238
A.7.10 Bose-Chaudhuri-Hocquenghem (15, 7) Coding Algorithm....248
A.7.11 Transmission Channel Interfaces....249
Appendix C....254

Downloaded from http://www.everyspec.com

C.1. General. 254
C.1.1. Scope. 254
C.1.2. Application. 254
C.2. Applicable documents. 254
C.3 Network timing model 254
C.3.1 Network timing model definitions 254
C.3.2 Network timing model parameters 255
C.3.2.1 Equipment preamble time (EPRE) 257
C.3.2.2 Phasing transmission time (PHASING) 257
C.3.2.3 Data transmission time (DATA) 258
C.3.2.4 Coupled acknowledgment transmission time (S) 258
C.3.2.5 Equipment lag time (ELAG) 258
C.3.2.6 Turnaround time (TURN) 258
C.3.2.7 DTE ACK preparation time (DTEACK) 260
C.3.2.8 DTE processing time (DTEPROC) 260
C.3.2.9 DTE turnaround time (DTETURN) 260
C.3.2.10 Tolerance time (TOL) 260
C.4. Network access control 260
C.4.1. Network busy sensing function 261
C.4.1.1. Data network busy sensing 261
C.4.1.2. Voice network busy sensing 261
C.4.1.3. Network busy detect time 261
C.4.2. Response hold delay 262
C.4.3 Timeout period 263
C.4.4 Network access delay 264
C.4.4.1 Random network access delay 266
C.4.4.2 Prioritized network access delay 266
C.4.4.3 Hybrid network access delay 266
C.4.4.4. Radio embedded network access delay (RE-NAD) 268
C.4.4.4.1. RE-NAD media access 268
C.4.4.4.2 RE-NAD network access 275
C.4.4.4.3 Network busy sensing and receive status 275
C.4.4.5 Deterministic adaptable priority-network access delay (DAP-NAD) 275
C.4.4.5.1. DAP-NAD information field 282
C.4.4.5.2 DAP-NAD equations 282
C.4.4.5.3 Initial condition state 284
C.4.5. Voice/data network sharing 284
Appendix D 286
D.1. General 286
D.1.1 Scope 286

Downloaded from http://www.everyspec.com

D.1.2 Application....286
D.1.3 Interoperability....286
D.2. Applicable Documents....286
D.3 Definition....286
D.4 General requirements....286
D.5. Detailed requirements....287
D.5.1 Traditional COMSEC transmission frame....287
D.5.1.1 COMSEC preamble field....287
D.5.1.1.1 COMSEC bit synchronization subfield....287
D.5.1.1.2 COMSEC frame synchronization subfield....288
D.5.1.1.3 Message Indicator subfield....288
D.5.1.2 Phasing....289
D.5.1.3 Transmission synchronization field....289
D.5.1.4 Data field....289
D.5.1.5 COMSEC postamble field....289
D.5.1.6 COMSEC algorithm....289
D.5.1.7 COMSEC modes of operation....289
D.5.2 Embedded COMSEC transmission frame....289
D.5.2.1 Phasing....290
D.5.2.2 Frame synchronization subfield....290
D.5.2.3 Robust frame format subfield....290
D.5.2.4 Message indicator field....290
D.5.2.5 Transmission word count subfield....290
D.5.2.6 Data field....290
D.5.2.7 COMSEC postamble field....290
D.5.2.8 COMSEC algorithm....290
D.5.2.9 COMSEC modes of operation....291
Appendix E....292
E.1 General....292
E.1.1 Scope....292
E.1.2 Application....292
E.2 Applicable Documents....292
E.3 Network configuration....292
E.4 Exchange network parameters (XNP) message....292
E.4.1 XNP message structure....292
E.4.1.1 Forwarding header....294
E.4.1.2 Message and data block structure....295
E.4.2 XNP message formats....297
E.4.2.1 Join request....297
E.4.2.2 Join accept....298

Downloaded from http://www.everyspec.com

E.4.2.3 Join reject....299
E.4.2.4 Hello message....300
E.4.2.5 Goodbye message....300
E.4.2.6 Parameter update request message....301
E.4.2.7 Parameter update message....302
E.4.2.8 Delay time message....302
E.4.2.9 Status notification message....303
E.4.3 XNP data block formats....304
E.4.3.1 Block 1, Station identification....304
E.4.3.2 Block 2, Basic network parameters....304
E.4.3.3 Block 3, MAC parameters....306
E.4.3.4 Block 4, Type 3 parameters....307
E.4.3.5 Block 5, Deterministic NAD parameters....308
E.4.3.6 Block 6, Probabilistic NAD parameters....308
E.4.3.7 Block 7, RE-NAD parameters....309
E.4.3.8 Block 8, Wait time....310
E.4.3.9 Block 9, Type 2 parameters....310
E.4.3.10 Block 10, Type 4 parameters....310
E.4.3.11 Block 11, NAD ranking....311
E.4.3.12 Block 12, Intranet parameters....311
E.4.3.13 Block 13, Error....311
E.4.3.14 Block 14, Address designation parameters....311
E.5 XNP message exchange....315
E.5.1 Data link addressing....315
E.5.2 Poll/Final bit....315
E.5.3 Network access....315
E.6 Network joining procedures....316
E.6.1 Joining concept....316
E.6.2 Procedures for joining a network with centralized network control....317
E.6.3 This paragraph was intentionally deleted....319
E.6.4 Joining procedure examples....319
E.6.4.1 Centralized network control, fully connected network....319
E.6.4.1.1 Sequence of events....320
E.6.4.1.2 Message formats....321
E.6.4.2 Centralized network control, disconnected joiner....334
E.6.4.2.1 Sequence of events....335
E.6.4.2.2 Message formats....337
E.6.4.3 This paragraph and all of its subparagraphs were intentionally deleted....365
Appendix F....366
F.1 General....366

Downloaded from http://www.everyspec.com

F.1.1 Scope....366
F.1.2 Application....366
F.2. Applicable documents....366
F.3 Forward error correction....366
F.4 Golay code....366
F.4.1 Half-rate Golay code....366
F.4.2 Golay code implementation....366
F.4.2.1 Hardware implementation....366
F.4.2.2 Hardware decoding....367
F.4.2.3 Software implementation....370
Appendix G....372
G.1 General....372
G.1.1 Scope....372
G.1.2 Application....372
G.2 Applicable Documents....372
G.3 PDU construction....372
G.3.1 VMF message data exchange....373
G.3.1.1 Example of VMF message data construction....375
G.3.2 Application Layer Data Exchange....378
G.3.2.1 Example of application layer PDU....379
G.3.3 Transport layer data exchange....385
G.3.3.1 An example of UDP header construction....387
G.3.4 Network layer data exchange....390
G.3.4.1 Example of internet layer header....392
G.3.4.2 Example of intranet layer header....394
G.3.5 This paragraph was intentionally deleted and left blank for paragraph conformity....396
G.3.6 Data link layer data exchange....396
G.3.6.1 Example of data link layer PDU....398
G.3.6.1.1 Zero bit insert/v36 scramble/FEC/TDC of the data link frame....404
G.3.6.1.2 Construction of the transmission header....405
G.3.6.1.3 Zero bit insert/v36 scramble/FEC of the transmission header....406
G.3.6.1.4 Completed data link layer PDU to be passed to the physical layer....406
G.3.7 Physical layer data exchange....407
G.3.7.1 Physical layer processing example....407
G.3.7.1.1 Transmit word count (TWC)....408
G.3.7.1.2 FEC & TDC of transmission header....408
G.3.7.1.3 The Physical layer PDU....408
Appendix H....409
H.1 General....409
H.1.1 Scope....409

Downloaded from http://www.everyspec.com

H.1.2 Application....409
H.2 Applicable Documents....409
H.3 Problem overview....409
H.3.1 Routing trees....410
H.4 Topology updates....410
H.4.1 Exchanging routing trees....410
H.4.2 Topology tables....411
H.4.3. Sparse routing trees....412
H.4.4 Rules for exchanging topology updates....414
H.4.4.1 Topology update triggers....414
H.4.4.2 Sending topology update messages....415
H.4.5 Non-relayers....415
H.4.6 Quiet nodes....415
H.4.7 Topology update request messages....416
Appendix I....417
I.1 General....417
I.1.1 Scope....417
I.1.2 Application....417
I.2 Applicable Documents. None....417
I.3 Problem overview....417
I.4 Procedure....417
I.4.1 Forward routing....417
I.4.2 End-to-end acknowledgments....418
I.5 Examples....418
I.5.1 Example 1....420
I.5.2 Example 2....421
I.5.3 Example 3....423
I.5.4 Relay processing....426
I.5.4.1 Relay processing at node C....427
I.5.4.2 Relay processing at node F....428
Appendix J....431
J.1 General....431
J.1.1 Scope....431
J.1.2 Application....431
J.2 Applicable Documents....431
J.3 Introduction....431
J.3.1 Physical protocol components....431
J.3.2 Optional rate 1/3 convolutional coding....431
J.3.3 Optional data scrambling....433
J.3.4 Optional robust multi-dwell....434

Downloaded from http://www.everyspec.com

J.3.4.1 Multi-dwell packet format....434
J.3.4.2 Multi-dwell SOP field....434
J.3.4.3 Multi-dwell segment count field....435
J.3.4.4 Multi-dwell data segments....436
J.3.4.5 Multi-dwell hop detection....436
J.3.4.6 Multi-dwell transmit processing....436
J.3.4.6.1 Hop data recovery time period....436
J.3.4.6.2 Data transmitted after a hop....437
J.3.4.6.3 Termination of transmission....437
J.3.4.7 Multi-dwell receive processing....438
J.3.4.7.1 Receive end-of-frame detection....438
J.3.4.7.2 Optional soft decision information....438
J.3.4.8 Multi-dwell majority logic overhead choice....438
J.3.4.9 Multi-dwell overhead....439
J.3.4.9.1 Terminals lacking hop detection....439
J.3.5 Robust communications protocol network timing....440
J.3.5.1 Net busy sensing....440
J.3.5.2 Response hold delay....440
J.3.5.2.1 Multi-dwell response....442
J.3.5.2.2 Response transmission example....442
J.3.5.2.3 Estimation of multi-dwell n_1....443
J.3.5.2.4 Receive processing delays....444
J.3.5.3 Timeout period (TP)....445
J.3.5.4 Network access delay (NAD)....445
J.3.6 Application guidance for the HAVEQUICK II link....445
J.3.6.1 Frequency hop synchronization....445
J.3.7 Summary....445
J.4 PDU construction....446
J.4.1 Robust PDU header....446
J.4.2 User data....446
J.4.3 Multi-dwell flag set....446
J.4.4 Multi-dwell flag not set....458
Appendix K....462
K.1 General....462
K.1.1 Scope....462
K.1.2 Application....462
K.2 Applicable documents....462
K.3 BCH (15,7) code....462
K.3.1 Hardware encoding....462
K.3.2 Hardware/Software decoding....467

Downloaded from http://www.everyspec.com

K.3.3 Software encoding 469
Appendix L 472
L.1. General.....472
L.1.1 Scope.....472
L.1.2 Application.....472
L.2. Applicable documents.....472
L.3. Definitions.....472
L.4. Detailed requirements.....472
L.4.1 Transmission channel interfaces 472
L.4.1.1 Non-return-to-zero (NRZ) interface.....473
L.4.1.1.1 Waveform 473
L.4.1.1.2 Transmission rates.....473
L.4.1.1.3 Operating mode.....473
L.4.1.2 Frequency-shift keying (FSK) interface for voice frequency channels.....473
L.4.1.2.1 Waveform 473
L.4.1.2.2 Transmission rates.....473
L.4.1.2.3 Operating mode.....473
L.4.1.3 Frequency-shift keying (FSK) interface for single-channel radio 474
L.4.1.3.1 Waveform 474
L.4.1.3.2 Transmission rates.....474
L.4.1.3.3 Operating mode.....474
L.4.1.4 Conditioned diphase (CDP) interface 474
L.4.1.4.1 Waveform 474
L.4.1.4.2 Transmission rates.....474
L.4.1.4.3 Operating mode.....474
L.4.1.5 Differential phase-shift keying (DPSK) interface for voice frequency channels.....475
L.4.1.5.1 Waveform 475
L.4.1.5.2 Transmission rates.....475
L.4.1.5.3 Operating mode.....475
L.4.1.6 Packet mode interface.....475
L.4.1.6.1 Waveform 475
L.4.1.6.2 Transmission rates.....475
L.4.1.6.3 Operating mode.....475
L.4.1.7 Amplitude shift keying (ASK) interface.....475
L.4.1.7.1 Waveform 475
L.4.1.7.2 Transmission rates.....476
L.4.1.7.3 Operating mode.....476

Downloaded from http://www.everyspec.com

1. SCOPE

1.1 Purpose. This document promulgates the minimum essential technical parameters in the form of mandatory system standards and optional design objectives for interoperability and compatibility among DMTDs, and between DMTDs and applicable C^4I systems. These technical parameters are based on the data communications protocol standards specified herein to ensure interoperability.

1.2 Scope. This document identifies the procedures, protocols, and parameters to be applied in specifications for DMTDs and C^4I systems that exchange information with DMTDs. This document addresses the communications protocols and procedures for the exchange of information among DMTDs, among C^4I systems, and between DMTDs and C^4I systems participating in inter- and intra-Service tactical networks.

1.3 Application guidance. This document applies to the design and development of new equipment and systems, and to the retrofit of existing equipment and systems.

1.4 System standards and design. The parameters and other requirements specified in this document are mandatory system standards if the word *shall* is used in connection with the parameter value or requirement under consideration. Non-mandatory design objectives are indicated in parentheses after a standardized parameter value or by the word should in connection with the parameter value or requirement under consideration. Unless stated otherwise, the following convention is used in the figures of MIL-STD-188-220: Least Significant Bit (LSB) is always shown to the RIGHT, and Most Significant Bit (MSB) is always shown to the LEFT.

Downloaded from http://www.everyspec.com

2. APPLICABLE DOCUMENTS

2.1 General. The documents listed in this section are specified in sections 3, 4, and 5 of this standard. This section does not include documents cited in other sections of this standard or recommended for additional information as examples. While every effort has been made to ensure the completeness of this list, document users are cautioned that they must meet all specified requirements documents cited in sections 3, 4, and 5 of this standard, whether or not they are listed.

2.2 Government documents.

2.2.1 Specifications, standards, and handbooks. The following specifications, standards, and handbooks form a part of this document to the extent specified herein. Unless otherwise specified, the issues of these documents are those listed in the current issue of the DoD Index of Specifications and Standards (DoDISS) and supplement thereto, cited in the solicitation (see 6.2).

STANDARDS

FEDERAL

FED-STD-1037	Glossary of Telecommunication Terms

MILITARY

MIL-STD-2045-47001	DoD Interface Standard, Connectionless Data Transfer -- Application Layer Standard

[Unless otherwise indicated, copies of federal and MIL-STDs are available from the Standardization Document Order Desk, 700 Robbins Avenue, Building 4D, Philadelphia, PA 19111-5094.]

2.2.2 Other Government documents, drawings, and publications. The following other Government documents, drawings, and publications form a part of this document to the extent specified herein. Unless otherwise specified, the issues are those cited in the solicitation.

JIEO Specification 9120A	Technical Interface Specification for UHF SATURN/HAVEQUICK Waveforms (SECRET)

Approved Standard Change Catalog (SCC) modifications to this document form a part of this document as of the SCC approval date. Approved SCCs are posted to the "Documents" section of the CNRWG web page, http://www-cnrwg.itsi.disa.mil.

Downloaded from http://www.everyspec.com

2.3 Non-Government publications. The following documents form a part of this document to the extent specified herein. Unless otherwise specified, the issues of the documents that are DoD- adopted are those listed in the issue of the DoDISS cited in the solicitation. Unless otherwise specified, the issues of documents not listed in the DoDISS are the issues of the documents cited in the solicitation (see 6.2).

2.3.1 International Organization for Standardization (ISO).

ISO 3309	Information Processing Systems -- Data Communication -- High-level Data Link Control Procedures -- Frame Structure
ISO 7498-1	Information Processing Systems -- Open Systems Interconnection -- Basic Reference Model
ISO 8802-2	Information Processing Systems -- Local Area Networks -- Part 2: Logical Link Control

[ISO standards are available from the American National Standards Institute, Inc., 1430 Broadway, New York, NY 10018.]

2.3.2 International Telecommunications Union (ITU).

Formerly known as International Telephone and Telegraph Consultative Committee (CCITT)

CCITT V.33	14,400 Bits Per Second Modem Standardized for Use on Point-to-Point 4-wire Leased Telephone-Type Circuits.
CCITT V.36	Modems for Synchronous Data Transmission Using 60-108 KHz Group Band Circuits.

[CCITT standards are available from Omnicom, 115 Park Street, South East, Vienna, VA 22180]

2.3.3 Internet Architecture Board (IAB)Standards.

RFC 826	An Ethernet Address Resolution Protocol (ARP) -- or -- Converting Network Protocol Addresses to 48-bit Ethernet Addresses for Transmission on Ethernet Hardware
RFC 903	A Reverse Address Resolution Protocol (RARP)
RFC 1770	IPv4 Option for Sender Directed Multi-Destination Delivery

Downloaded from http://www.everyspec.com

[Request for comments (RFCs) are available from Network Information Center, 14200 Park Meadow Drive, Suite 200, Chantilly, VA 22021. The Network Information Center (NIC) can be reached, by phone, Monday through Friday, 7 AM through 7 PM, Eastern Standard time: 1-800-365-3642 and 1-703-802-4535. RFCs may also be obtained from the DS.INTERNIC.NET via FTP, WAIS, and electronic mail. Through FTP, RFCs are stored as rfc/rfcnnnn.txt or rfc/rfcnnnn.ps where 'nnnn' is the RFC number, 'txt' is a text file and 'ps' is a postscript file. Login as "anonymous" and provide your e-mail address as the password. Through WAIS, you may use either your local WAIS client or TELNET to DS.INTERNIC.NET and login as "wais" (no password required). Through electronic mail send a message to mailserv@ds.internic.net and include the following commands in the message body document -by-name RFC#### where #### is the RFC number without leading zeros or file /ftp/rfc/rfc####.yyy where 'yyy' is 'ps' or 'txt'. To obtain the complete RFC index, the subject line of

2.3.4 Other. In parallel to the English specification found in this standard, several components of MIL-STD-188-220 also have been formally specified using Estelle. Estelle is a formal description technique based on communicating, extended finite state machines. Estelle is described in ISO 9074. The Estelle formal specifications are available via the CNR Implementation Working Group World Wide Web page: http://www-cnrwg.itsi.disa.mil.

Parameter values for the Network Timing Model, described in Appendix C, are provided in a separate document entitled "MIL-STD-188-220 Media Access Configuration (MAC) Parameters and Parameter Values". It is important, to insure interoperability, that all systems participating in a network use the same parameter values. These parameters and values should be utilized by all systems. The MAC parameters and parameter values are available via the CNR Implementation Working Group World Wide Web page: http://www-cnrwg.itsi.disa.mil.

A list of data link parameters and their recommended values is provided in a separate document entitled "MIL-STD-188-220 Protocol Parameters and Values". The actual data link parameter values will determine the efficiency and effectiveness of the network. A bad choice of parameter values can degrade the network performance and can lead to a breakdown of the network precluding interoperability. The Protocol parameters and parameter values are available via the CNR Implementation Working Group World Wide Web page: http://www-cnrwg.itsi.disa.mil.

2.4 Order of precedence. In the event of a conflict between the text of this document and the references cited herein, the text of this document takes precedence. Nothing in this document, however, supersedes applicable laws and regulations unless a specific exemption has been obtained.

Downloaded from http://www.everyspec.com

3. DEFINITIONS

3.1 Definitions of terms. Definitions of terms used in this document are specified in FED-STD-1037.

3.2 Abbreviations and acronyms. Abbreviations and acronyms used in this MIL-STD are defined below. In addition, those listed in the current edition of FED-STD-1037 have been included for the convenience of the reader.

ABM	Asynchronous Balanced Mode
ACK	Acknowledgment
ADM	Asynchronous Disconnected Mode
ADMC_N	Analog Data Mode Control_Not
ARP	Address Resolution Protocol
ASD	Adverse State Detector
ASK	Amplitude Shift Keying
BCH	Bose-Chaudhuri-Hocquenghem
BER	Bit Error Rate
bps	bit(s) per second
C/R	command/response
C^4I	Command, Control, Communications, Computers, and Intelligence
CCITT	International Telephone and Telegraph Consultative Committee
CDP	Conditioned Diphase
CNR	Combat Net Radio
COMSEC	Communications Security
CSMA	Carrier Sense Multiple Access
DAP-NAD	Deterministic Adaptive Prioritized - Network Access Delay
DARPA	Defense Advanced Research Projects Agency
dB	decibel
DC	Direct Current
DCE	Data Circuit-terminating Equipment
DDCO	Digital Data Clock Out
Dec	Decimal
DES	Destination
DIA	Decoupled Information Acknowledgement
DISC	Disconnect
DL	Data Link Layer
DM	Disconnect Mode
DMTD	Digital Message Transfer Device
DoD	Department Of Defense

Downloaded from http://www.everyspec.com

DoDISS	Department Of Defense Index Of Specifications and Standards
DPSK	Differential Phase-Shift Keying
DPTT	Delayed Push-to-Talk
DRA	Data Rate Adapter
DRNR	Decoupled Receive Not Ready
DRR	Decoupled Receive Ready
DTE	Data Terminal Equipment
ECP	Emergency Command Precedence
EDC	Error Detection and Correction
EDM	Enhanced Data Mode
ETE	End-to-End
FCS	Frame Check Sequence
FEC	Forward Error Correction
FED-STD	Federal Standard
FH	Frequency Hopping
FIFO	First-In First-Out
FPI	Field Presence Indicator
FRMR	Frame Reject
FSK	Frequency-Shift Keying
FSN	First Subscriber Number
GPI	Group Presence Indicator
GRI	Group Repeat Indicator
H-NAD	Hybrid - Network Access Delay
HDLC	High-level Data Link Control
Hex	Hexadecimal
HF	High Frequency
HLEN	Header Length
HRT	Hop Recovery Time
Hz	Hertz
I PDU	Information frame PDU
IAB	Internet Architecture Board
ICOM	Integrated COMSEC
IHL	Internet Header Length
IL	Intranet Layer
IP	Internet Protocol
ISO	International Organization for Standardization
ITU	International Telecommunications Union
JIEO	Joint Information Engineering Organization
kbps	kilobit(s) per second
KG	Key Generator

Downloaded from http://www.everyspec.com

KHz	Kilohertz
LOS	Line-of-Sight
LSB	Least Significant Bit
MAC	Media Access Configuration
MI	Message Indicator
MIL-STD	Military Standard
MSB	Most Significant Bit
MTU	Maximum Transmission Unit
N(R)	Receive sequence number
N(S)	Send sequence number
NAC	Network Access Control
NAD	Network Access Delay
NATO	North Atlantic Treaty Organization
NETCON	Network Control
NIC	Network Information Center
NP	Network Protocol
NRZ	Non-Return-to-Zero
NS	Number of Stations
OSI	Open Systems Interconnection
OSPF	Open Shortest Path First
OTAR	Over-The-Air rekeying
P/F	Poll/Final
P-NAD	Priority - Network Access Delay
PDU	Protocol Data Unit
PL	Physical Layer
PN	Pseudo-Noise
PSK	Phase-Shift Keying
R-NAD	Random Network Access Delay
RARP	Reverse Address Resolution Protocol
RE-NAD	Radio Embedded - Network Access Delay
REJ	Reject
REL	Relay
RF	Radio Frequency
RFC	Request For Comments
RHD	Response Hold Delay
RNR	Receive Not Ready
RR	Receive Ready
RSET	Reset
R/T	Receiver/Transmitter
S/N	Signal-to-Noise ratio

Downloaded from http://www.everyspec.com

S PDU	Supervisory frame PDU
SABME	Set Asynchronous Balanced Mode Extended
SALT	Smallest Actual Lag Time
SATCOM	Satellite Communications
SC	Single Channel
SDM	Standard Data Mode
SINCGARS	Single Channel Ground and Airborne Radio System
SIP	System Improvement Program
SNDCF	Subnetwork Dependent Convergence Function
SOM	Start Of Message
SOP	Start Of Packet
SP	Subscriber Precedence
SREJ	Selective Reject
TBD	To Be Determined
TCP	Transmission Control Protocol
TCSS	Telecommunications System Standards
TDC	Time-Dispersive Coding
TOS	Type Of Service
TP	Timeout Period
TRANSEC	Transmission Security
TWC	Transmission Word Count
U PDU	Unnumbered frame PDU
UA	Unnumbered Acknowledgment
UDP	User Datagram Protocol
UI	Unnumbered Information
URNR	Unnumbered Receive Not Ready
URR	Unnumbered Receive Ready
V(R)	Receive-state Variable
V(S)	Send-state Variable
VMF	Variable Message Format
XNP	Exchange Network Parameters

Downloaded from http://www.everyspec.com

4. GENERAL REQUIREMENTS

4.1 Digital message transfer device. A DMTD is a portable data terminal device with limited message generation and processing capability. DMTDs are used for remote access to automated C^4I systems and to other DMTDs. The environment encompasses point-to-point, point-to-multipoint, relay and broadcast transfer of information over data communications links.

4.2 Interoperability. Interoperability of DMTDs and associated C^4I systems shall be achieved by implementing the standard interface for DMTD subsystems (see Figure 1) specified in this document. This standard defines the layered protocols for the transmission of single or multiple segment messages over broadcast radio subnetworks and point-to-point links. It provides the minimum essential data communications parameters and protocol stack required to communicate with other data terminal devices. These communications parameters and protocols will facilitate functional interoperability among DMTDs, and between DMTDs and applicable C^4I systems within the layered framework described below. Electrical and mechanical design parameters are design-dependent and are outside the scope of this document. Interoperability considerations for terminal designers and systems engineers are addressed in 6.3 and Appendix B.

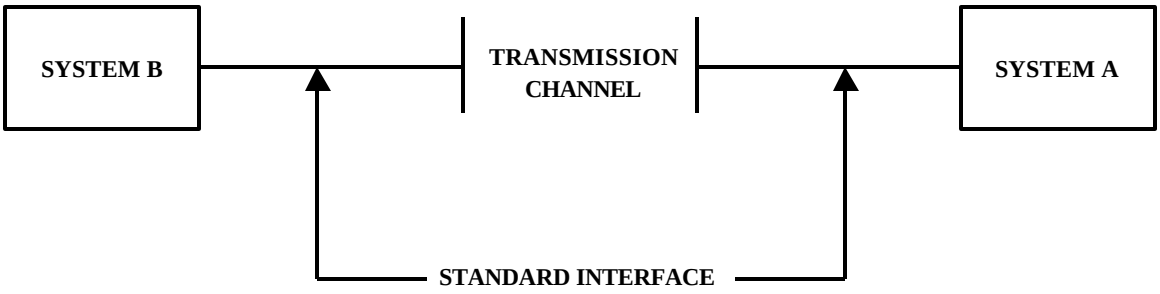

NOTES:

1. System A and System B (where either system, or both, can be a DMTD or a C^4I system) may include modems, line drivers, error control algorithms, encryption devices, control units, and other devices as required to comply with this standard.

2. The transmission channel may include single and multichannel transmission equipment.

FIGURE 1. Standard interface for DMTD subsystems.

4.3 Framework. The communications and procedural protocols used in DMTD equipment shall support the layers of the functional reference model depicted in Figure 2. The DMTD functional reference model in Figure 2 is based on the ISO 7498 OSI seven-layer model and is for reference only. Figure 2 contains the framework that is used in this document for defining the protocols required to

Downloaded from http://www.everyspec.com

exchange information among DMTD subsystems, and between DMTD subsystems and applicable C^4I systems. Figure 3 illustrates a representative time epoch of the basic frame structure supported by the DMTD subsystem. This standard describes the protocols at the following OSI layers:

a. Physical Layer

b. Data Link Layer
   1. Network Access Control
   2. Link Level Control

c. Network Layer (Intranet Layer)

Application Layer *
Presentation Layer *
Session Layer *
Transport Layer *
Network Layer
Data Link Layer
Physical Layer

* NOTE: These layers are not addressed in this standard.

FIGURE 2. DMTD functional reference model.

Downloaded from http://www.everyspec.com

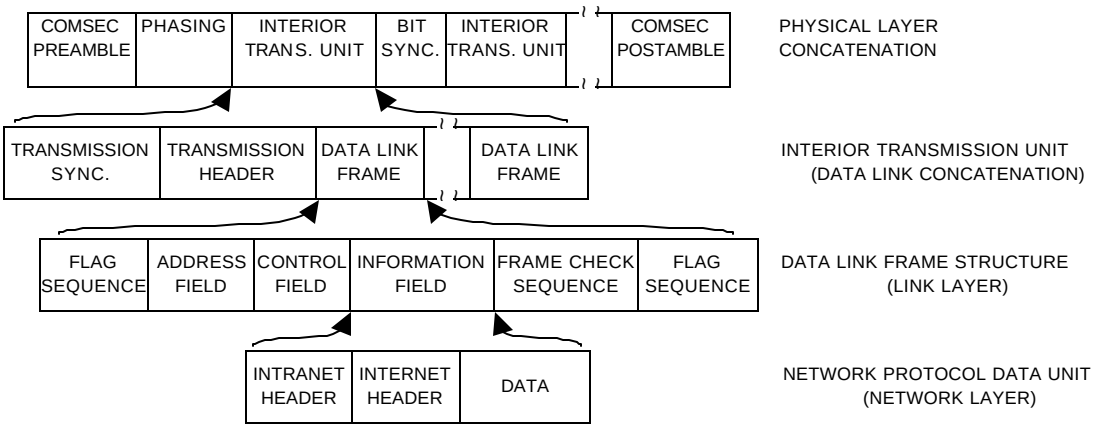

NOTES: Phasing if required, is applied before the first Interior Transmission Unit.

Bit Synchronization is applied between physically concatenated Interior Transmission Units.

The Network Protocol Data Unit may include an Internet header in addition to the required Intranet header. This standard does not specify requirements for the Internet header.

FIGURE 3. Basic structure of DMTD protocol data units at the standard interface.

4.4 DMTD capabilities. The waveform and the protocols necessary to ensure end-to-end (ETE) interoperability at the interface shall support the following capabilities:

a. Transmission in a half-duplex mode over radio, wireline, and satellite links;

b. Link encryption;

c. Point-to-point, multipoint, relay or broadcast connectivity between stations;

d. Asynchronous balanced mode (ABM) of operation between two or more stations;

e. Network access control for network access management and collision avoidance;

f. Transport of bit-oriented or free-text (character-oriented) messages for information exchange in a variable message format (VMF) over the link;

g. User data exchange using single or multiple frame packets;

Downloaded from http://www.everyspec.com

h. Addressing conventions that support single, multiple, and global station broadcast addressing, as well as routing and relay;

i. Error control, for maintaining data integrity over the link, including frame check sequence (FCS), forward error correction (FEC), and time-dispersal coding (TDC);

j. Data link frame acknowledgment, intranet frame acknowledgment and ETE, segment acknowledgment at the transport layer;

k. Intranet relay at the network layer; and

l. Topology update capability for the intranet.

Downloaded from http://www.everyspec.com

5. DETAILED REQUIREMENTS

5.1 Physical layer. The physical layer (PL) shall provide the control functions required to activate, maintain, and deactivate the connections between communications systems. This standard does not address the electrical or mechanical functions normally associated with PL protocols.

5.1.1 Transmission channel interfaces. Transmission channel interfaces should be implemented as dictated by the communication device (e.g., radio) to which the system will be connected. The transmission channel interfaces, specified in Appendix L, define the transmission envelope characteristics (signal waveform, transmission rates, and operating mode) authorized at the standard interface between a DMTD and the transmission channel. The transmission channel may consist of wireline, satellite, or radio links. The specific details of the physical interface for connecting DMTDs to the equipment that implements the transmission channel are beyond the scope of this document. The actual physical connections will depend on the interface characteristics required by the particular transmission equipment. These unique physical interface characteristics may be defined in the equipment specifications or in technical interface specifications. Therefore, the requirements for the electrical features (such as data, clock, and control) and mechanical features (such as connectors, pin assignments, and cable) of the connection between the DMTD and the associated transmission channel equipment are left to the equipment designer.

5.2 Physical-layer protocol.

5.2.1 Physical-layer protocol data unit (PDU). The transmission frame shall be the basic PDU of the PL and shall be as shown in Figure 4. Figure 4a presents the transmission frame structure for traditional communication security (COMSEC) (backward-compatible mode). Traditional COMSEC is used in this document to denote systems with the COMSEC equipment placed external to the C^4I system. Figure 4b presents the transmission frame structure with COMSEC embedded in the C^4I system (embedded mode). Figure 4c presents the transmission frame structure without COMSEC.

Downloaded from http://www.everyspec.com

COMSEC PREAMBLE	PHASING	TRANSMISSION SYNCHRONIZATION	DATA FIELD	COMSEC POSTAMBLE

Figure 4a. Transmission frame structure with external COMSEC.

PHASING	TRANSMISSION SYNCHRONIZATION WITH COMSEC MESSAGE INDICATOR	DATA FIELD	COMSEC POSTAMBLE

Figure 4b. Transmission frame structure with embedded COMSEC.

PHASING	TRANSMISSION SYNCHRONIZATION	DATA FIELD

Figure 4c. Transmission frame structure with no COMSEC.

FIGURE 4. Transmission frame structure.

5.2.1.1 Communications security preamble and postamble. These fields are present when link encryption is used. The COMSEC preamble field shall be used to achieve cryptographic synchronization over the link. The COMSEC postamble field shall be used to provide an end-of-transmission flag to the COMSEC equipment at the receiving station. These fields and the COMSEC synchronization process are described in Appendix D (D.5.1.1 and D.5.1.5, respectively).

5.2.1.2 Phasing. Phasing shall be a string of alternating ones and zeros, beginning with a one, sent by the DTE. For Packet Mode interfaces, the length of this field shall be 0. Phasing is described in C.3.2.2.

5.2.1.3 Transmission synchronization field. The structure of the transmission synchronization field is dependent on the mode of operation. The three modes are Asynchronous for use with Data Circuit-terminating Equipment (DCE) that present modulated data without a clock, Synchronous for use with DCEs that present a clock and data interface and Packet for use with DCEs that require no frame synchronization. Note that the Synchronous mode includes both Standard Data Mode (SDM) and Enhanced Data Mode (EDM). For EDM, available in some radios, FEC and TDC are provided by the radio. SDM typically requires FEC and TDC to be applied by the DTE. The structures for Asynchronous and Synchronous modes are shown in Figure 5. Figure 5a presents the transmission synchronous field with either external or no COMSEC. Figure 5b presents the transmission synchronous field with embedded COMSEC. The structure for the Packet Mode is described in 5.2.1.3.3.

Downloaded from http://www.everyspec.com

<table>
<tr><td></td><td>❸</td><td>FEC ❶
TDC ❷</td><td>Selectable:
FEC
TDC
Scrambling</td></tr>
<tr><td>Frame Sync</td><td>Robust Frame Format</td><td>Transmission Word Count</td><td rowspan="2">DATA FIELD</td></tr>
<tr><td colspan="3">Transmission Synchronization</td></tr>
</table>

Figure 5a. With external COMSEC or No COMSEC.

<table>
<tr><td></td><td>❸</td><td>FEC ❶</td><td>FEC ❶
TDC ❷</td><td>Selectable:
FEC
TDC
Scrambling</td></tr>
<tr><td>Frame Sync</td><td>Robust Frame Format</td><td>Message Indicator</td><td>Transmission Word Count</td><td rowspan="2">DATA FIELD</td></tr>
<tr><td colspan="4">Transmission Synchronization</td></tr>
</table>

Figure 5b. With Embedded COMSEC.

Notes:

❶ Golay FEC is applied to the Transmission Word Count, message Indicator and Transmission Header fields in Asynchronous and Synchronous Modes. (The Transmission Header is the leading portion of the Data Field as described in 5.3.1.)

❷ TDC is applied to the Transmission Word Count and Transmission Header fields in Asynchronous and Synchronous Modes. (The Transmission header is the leading portion of the Data Field as described in 5.3.1.)

❸ The Robust Frame Format subfield is optional and is used only when implementing the Robust Communications Protocol described in Appendix J.

FIGURE 5. Transmission synchronization field.
(Synchronous and Asynchronous Mode)

5.2.1.3.1 Asynchronous mode transmission synchronization field. The Asynchronous Transmission Synchronization field shall be composed of the following:

a. Frame Synchronization

b. Robust Frame Format (Optional)

Downloaded from http://www.everyspec.com

c. Message Indicator (MI) (embedded COMSEC only)

d. Transmission Word Count

5.2.1.3.1.1 Frame synchronization subfield. This subfield shall consist of the fixed 64-bit synchronization pattern shown in Figure 6 or Figure 7. The receiver shall correlate for the frame synchronization pattern. A pattern shall be detected if 13 or fewer bits are in error with non-inverted or inverted data. If the correlation detects an inverted synchronization pattern, all received data shall be inverted before any other received processing is performed. If the frame synchronization subfield shown in Figure 6 is detected before the robust frame synchronization subfield shown in Figure 7, the receiver shall assume the optional robust processing is not requested for this transmission.

MSB	LSB
1001101110110101011110100000100101101001010011110100111100100110	

FIGURE 6. Frame synchronization subfield.

If the robust frame synchronization pattern shown in Figure 7 is detected, the robust frame format subfield shall be decoded to determine what physical level processing is required for data reception. If the robust frame synchronization pattern shown in Figure 7 is used, the frame synchronization pattern shown in Figure 6 shall not be used.

MSB	LSB
0001110001111010101101100100000011111101101101110011001110010010	

FIGURE 7. Robust frame synchronization subfield.

5.2.1.3.1.2 Robust frame format subfield. The robust frame subfield is an optional field that is used only with the robust frame synchronization subfield shown in Figure 7. The robust frame format subfield is a seven bit field which specifies the format of the transmitted frame. The robust frame format subfield shall be formatted with multi-dwell majority vote 3 out of 5 Bose-Chaudhuri-Hocquenghem (BCH) (15,7) coding and no scrambling or convolutional encoding. The bits are defined in Tables I, II and III.

Downloaded from http://www.everyspec.com

TABLE I. Robust frame format.

Bit(s)	Fields
0 (LSB)	Multi-Dwell Flag
1	Scrambling Flag
2, 3, 4	Multi-Dwell Transmission Format
5,6	Convolutional Coding Constraint Length

TABLE II. Multi-dwell transmission format.
(The Most Significant Bit is shown on the Left)

000	Single BCH(15,7) word 32 BIT SOP, 11 64-bit segments per packet
001	Majority Vote 2 out of 3 BCH(15,7) word 64 BIT SOP, 13 64-bit segments per packet
010	Majority Vote 3 out of 5 BCH(15,7) word 64 BIT SOP, 13 64-bit segments per packet
011	Majority Vote 3 out of 5 BCH(15,7) word 64 BIT SOP, 6 64-bit segments per packet

TABLE III. Convolutional coding constraint length codes.
(The Most Significant Bit is shown on the Left)

00	Constraint Length 3
01	Constraint Length 5
10	Constraint Length 7
11	Convolutional Coding Disabled

Downloaded from http://www.everyspec.com

5.2.1.3.1.3 Message indicator (MI). The MI field is contained within the transmission synchronization field only when COMSEC is embedded in the host. The MI field is defined in Appendix D (D.5.1.1.3 and D.5.2.4). Golay FEC is applied to the Transmission Word Count (TWC), MI (with embedded COMSEC) and Transmission Header in Asynchronous and Synchronous Modes.

5.2.1.3.1.4 Transmission word count (TWC) subfield. The TWC is a 12-bit value calculated by the transmitting station to inform the receiving station of the number of 16-bit words (after any appropriate FEC encoding, TDC fill or zero bit insertion) contained in the transmission. The TWC calculation shall include the length of the TWC and data field (see 5.2.1.4). The maximum TWC is 4095 (2^{12}-1). The value provided by the 12 information bits is binary-encoded. The maximum number of words is dependent on the maximum number of bits allowed in the data field of a transmission frame. It is possible that the number of bits in the data field will not be evenly divisible by 16. In that case, the word count shall be rounded to the next higher integer and a variable number of zeros, 0 to 15, shall be appended after the final link layer frame in order to make the Transmission Unit an integral number of 16-bit words. These zeros shall not be subject to FEC or TDC (see G.3.7.1.3). TDC is applied to the TWC and Transmission Header in Asynchronous and Synchronous Modes. Golay FEC is applied to the TWC, MI (with embedded COMSEC) and Transmission Header in Asynchronous and Synchronous Modes.

5.2.1.3.2 Synchronous mode transmission synchronization field. The Synchronous Transmission Synchronization field shall be composed of the following:

a. Frame Synchronization

b. Robust Frame Format (optional)

c. Message Indicator (MI) (embedded COMSEC only)

d. Transmission Word Count

5.2.1.3.2.1 Frame synchronization subfield. The Synchronous Mode Frame Synchronization subfield is the same as the Asynchronous Mode Frame Synchronization subfield defined in 5.2.1.3.1.1 and shown in Figures 6 and 7.

5.2.1.3.2.2 Robust frame format subfield. The Synchronous Mode Robust Frame Format subfield is the same as the Asynchronous Mode Robust Frame Format subfield defined in 5.2.1.3.1.2.

5.2.1.3.2.3 Message indicator (MI). The format of the Synchronous Mode MI field is the same as for the Asynchronous Mode MI field defined in 5.2.1.3.1.3.

Downloaded from http://www.everyspec.com

5.2.1.3.2.4 Transmission word count (TWC) subfield. The Synchronous Mode TWC format is the same as the Asynchronous Mode TWC defined in 5.2.1.3.1.4.

5.2.1.3.3 Packet mode transmission synchronization field. This field consists of at least one HDLC flag corresponding to the flag bit pattern shown in Figure 8. When a DTE has data to send to the radio (DCE) it shall transmit flags on the 'T' lead until flags are received from the radio (DCE) on the 'R' lead, then data shall be sent to the radio (DCE) on the 'T' lead. A variable number (at least one) of lead flags shall be transmitted prior to the actual data. On the receive side, the radio (DCE) shall send at least one flag prior to the data it sends to the DTE.

MSB	LSB
01111110	

FIGURE 8. Packet mode transmission synchronization field.

5.2.1.3.4 Multi-dwell protocol. The multi-dwell protocol provides the capability to transmit data over frequency hopping (FH) radios without internal buffering. The multi-dwell protocol is described in Appendix J.

a. The multi-dwell start of packet (SOP) header size and segment count redundancy are configured depending upon the channel environment and are not changed on a per transmission basis.

b. The upper layer indicates the size of the transmission in the PL-Unitdata Request data length. The PL shall use the data length information to determine the most efficient multi-dwell parameters to use for data transmission. The optional multi-dwell segment count may be used by the upper layer to override the automatic determination of the multi-dwell transmission parameters made by the PL. For a multi-dwell reception, the upper layer will use the timing of the transition of the PL-Status Indication Network Activity from "busy with data" to "clear" to indicate the time of reception of the last bit of data.

5.2.1.4 Data field. The data field shall contain the string of bits, comprising the Transmission Header and concatenated data link frames, created by the data link layer following the procedures for framing, zero bit insertion, concatenation, FEC, TDC, and scrambling. FEC, TDC and Scrambling are not applied when Packet Mode is used.

Downloaded from http://www.everyspec.com

5.2.1.5 Bit synchronization field. This field shall be used to provide the receiver a signal for re-establishing bit synchronization. Bit synchronization is used only between physically concatenated frames in Asynchronous Mode. The bit synchronization field shall be a 64-bit pattern that consists of alternating ones and zeros, beginning with a one.

5.2.2 Network access control (NAC) related indications.

a. The net busy information is conveyed to the upper layer protocol (data link) through a status indication. Upon detection of a net busy, the net busy indicator shall be set. The net busy sensing indicator shall be reset when neither digital data nor voice is detected by the net busy sensing function. Appendix C (C.4.1) describes the net busy sensing function.

b. The NAC algorithm described in Appendix C needs the transmitter to know when the last bit of data is transmitted, and the receiver to know when the last bit of data is received.

5.2.3 Physical-layer to upper-layer interactions. At least three primitives are used to pass information for the sending and receiving of data across the upper layer boundary.

a. Requests for transmission of data are sent by the upper layer, using the PL Unitdata Request primitive with the following parameter:

PL-Unitdata Request
- Data/Data length
- FEC/TDC/Scrambling
  - No FEC, No TDC, No Scrambling
  - No FEC, No TDC, Scrambling
  - FEC, No TDC, No Scrambling
  - FEC, No TDC, Scrambling
  - FEC, TDC, No Scrambling
  - FEC, TDC, Scrambling
- Multi-dwell transmission format segment count
  - 6 segments per packet
  - 11 segments per packet
  - 13 segments per packet

Downloaded from http://www.everyspec.com

b. Indication of data received is provided to the upper layer through the Unitdata Indication primitive with the following parameter:

PL-Unitdata Indication
- Data/Data length
- FEC/TDC/Scrambling
  - No FEC, No TDC, No Scrambling
  - No FEC, No TDC, Scrambling
  - FEC, No TDC, No Scrambling
  - FEC, No TDC, Scrambling
  - FEC, TDC, No Scrambling
  - FEC, TDC, Scrambling
- Multi-dwell transmission format segment count
  - 6 segments per packet
  - 11 segments per packet
  - 13 segments per packet

c. Net activity status information is provided to the upper layer through a Status Indication with the following parameters:

PL-Status Indication
- Net activity
  - net clear
  - net busy
  - busy with/data
  - busy with/voice
- Transmission Status
  - transmit complete/idle
  - in-process
  - transmit aborted

5.3 Data link layer. The data link layer shall provide the control functions to ensure the transfer of information over established physical paths, to provide framing requirements for data, and to provide for error control. Zero bit insertion is applied to the Transmission Header and Data Link Frame.

5.3.1 Transmission header. The Transmission Header is the leading portion of the Data Field transmission (see 5.2.1.4). The Transmission Header consists of a two-octet Transmission Information field, a 32-bit FCS, in accordance with 5.3.4.2.5, and is bounded by Flags in accordance with 5.3.4.2.1. The Transmission Information field contains Selection bits and a Transmission Queue field which indicates the transmitting station queue length. The Transmission Header format is shown in Figure

Downloaded from http://www.everyspec.com

9. Golay FEC and TDC are applied to the entire Transmission Header (except when the Packet Mode Interface described in L.4.1.6 is used at the PL), including leading and trailing flags, MI (with embedded COMSEC) and TWC. The TWC, MI and Transmission Header shall have Golay FEC applied when operating in the Asynchronous and Synchronous modes. TDC (7x24) bit interleaving shall be applied in unison with the FEC on the TWC and Transmission Header. The data shall be formatted into a TDC block composed of seven (7) 24-bit Golay (24,12) codewords in a manner analogous to 5.3.14.3. There are 168 FEC-encoded bits with this TDC.

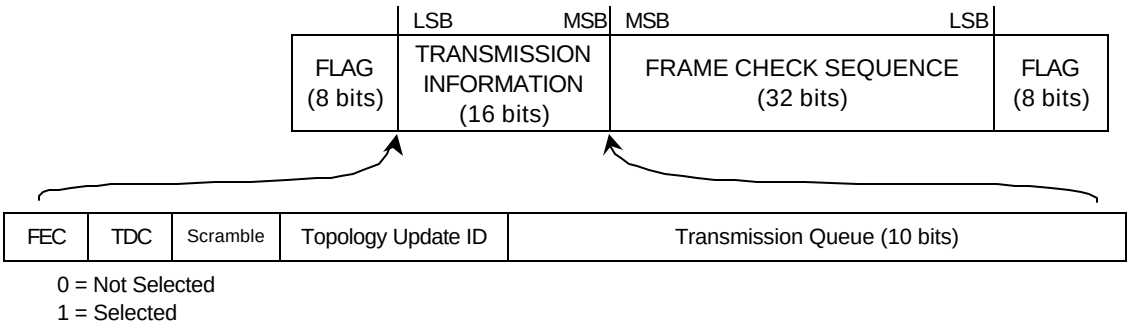

FIGURE 9. Transmission header.

5.3.1.1 Selection bits. The first three bits of the Transmission Information field selects FEC, TDC and Scrambling, respectively, on or off for the remainder of the PL data field. A zero indicates "off" and a one indicates "on" in these bit positions. Regardless of the setting of these three bits, Golay FEC/TDC is applied and Scrambling is not applied to the entire Transmission Header. Scrambling, if used, shall be applied before any FEC and TDC is applied. FEC, TDC and scrambling are not applied when the Packet Mode Interface described in L.4.1.6 is used at the PL. In addition, FEC/TDC is not applied when the SINCGARS Synchronous mode is selected utilizing the EDM available in the SIP and ASIP radio.

5.3.1.2 Topology update identifier. This subfield shall contain the least significant three bits of the Topology Update ID used in the most recent Topology Update message (see 5.4.1.2). If no Topology Update messages have been sent, this subfield shall be all zeros.

5.3.1.3 Transmission queue field. This field is used to support the radio embedded network access delay (RE-NAD) process and the deterministic adaptable priority network access delay (DAP-NAD) process. The entire field is 10-bits long with the first two bits ('T'-bits) indicating how the rest of the 8-bits long subfield is interpreted. The format of the transmission queue field is shown in Figure 10.

Downloaded from http://www.everyspec.com

5.3.1.3.1 T-bits. The two left-most bits in the transmission queue field are the T-bits. The bit sequence interpretations are indicated in Figure 10. The transmission queue subfield has a variable format depending on which of the following uses are intended:

a. T-bits = 00 The transmission queue subfield does not contain information and is ignored.

b. T-bits = 01 The transmission queue subfield is used in conjunction with RE-NAD. This subfield contains queue precedence (in bit positions 2-3) and queue length (bit positions 4-7). Bit positions 8 and 9 are spare and ignored.

c. T-bits = 10 The transmission queue subfield is used in conjunction with DAP-NAD. This subfield contains Data Link Precedence (in bit positions 2 and 3) and First Subscriber Number (FSN) (in bit positions 4-9).

d. T-bits =11 This bit sequence is INVALID and shall be ignored. Data link frame(s) after this header shall be processed normally.

LSB MSB

T-Bits

0	1	2	3	4	5	6	7	8	9
0	0	Transmission Queue Subfield Ignored							
0	1	Queue Prec.		Queue Length				Spare	
1	0	Data Link Prec.		First Subscriber Number					
1	1	Invalid/Ignored							

FIGURE 10. Transmission queue field formats.

Downloaded from http://www.everyspec.com

5.3.1.3.2 Queue precedence. The queue precedence component indicates the highest precedence level of information type frames in the queue.

The precedence levels and bit sequences are:

Precedence	Bit 2	Bit 3	Value
Urgent	0	0	0
Priority	1	0	1
Routine	0	1	2
Reserved	1	1	3

5.3.1.3.3 Queue length. The queue length component indicates the number of concatenated frame sequences required to transmit all of the highest precedence messages in the transmission queue at the time the transmission was created. This number may be used by receiving station to calculate the average network member's queue length. This average is used in calculation of the continuous scheduler for the Radio Embedded channel access procedure (C.4.4.4).

5.3.1.3.4 Data link precedence. This subfield consists of two bits and contains a value that indicates the highest precedence of any message that is contained in the physical frame. It shall contain the value 0 if an urgent message is in the frame, 1 if a priority but no urgent message is in the frame and 2 if neither an urgent nor priority message is in the frame. The variable NP in the equations defined in Appendix C (C.4.4.5.2) is set equal to the contents of the highest precedence Data Link precedence field in any (possibly concatenated) physical frame contained in the most recent reception.

The precedence levels and bit sequences for the Data Link precedence field are:

Precedence	Bit 2	Bit 3	Value
Urgent	0	0	0
Priority	1	0	1
Routine	0	1	2
Undefined	1	1	3

Undefined precedence values shall be handled as routine.

5.3.1.3.5 First subscriber number (FSN). This subfield consists of 6 bits and designates the number of the subscriber that is to have the first net access opportunity at the next net access period (the one immediately following this transmission). The number of the subscriber that has the first net access opportunity is the variable FSN in the equations defined in Appendix C (C.4.4.5.2).

Downloaded from http://www.everyspec.com

Bit coding for FSN is:

1st Subscriber #	Bit: 4--->9
Illegal	000000
1	100000
2	010000
.	..
.	..
.	..
63	111111

5.3.2 Network access control (NAC). The presence of multiple subscribers on a single communications net requires a method of controlling the transmission opportunities for each subscriber. To minimize conflicts, the net busy sensing function and NAC procedures regulate transmission opportunities for all participants on the net. Random - Network Access Delay (R-NAD), Hybrid - Network Access Delay (H-NAD), Prioritized - Network Access Delay (P-NAD), Radio Embedded - Network Access Delay (RE-NAD) and Deterministic Adaptable Priority - Network Access Delay (DAP-NAD) are the authorized NAC procedures at this interface. Appendix C defines the NAC parameters for R-NAD, H-NAD, P-NAD, DAP-NAD, and RE-NAD. As a minimum, DAP-NAD and R-NAD shall be available to regulate transmission opportunities for all participants when the network is operating in Synchronous Mode.

5.3.2.1 Scheduler. When the net access is embedded in the radio, a scheduler may be implemented in the DTE or communications processor to organize radio access throughout the network. The scheduler is used to provide a random distribution of timing for channel requests. When a station has data to transmit, it shall calculate the scheduler timer as indicated in Appendix C (C.4.4.4.1). When this timer expires, the link layer shall first determine that the previous frame concatenation was transmitted by the PL. If the frame concatenation was not transmitted, the link layer shall request its transmission. If a higher precedence individual frame becomes available for transmission, the concatenated frames shall be re-built to include the higher precedence frame. If the previous frame concatenation was transmitted, the link layer shall build a new frame concatenation. This frame concatenation shall then be passed to the PL for transmission. Both randomized and immediate scheduler modes are specified in Appendix C (C.4.4.4.1.1, C.4.4.4.1.5 and C.4.4.4.1.6, respectively).

Downloaded from http://www.everyspec.com

5.3.3 Types of procedures. Four types of operation for data communication between systems are defined to provide basic connectionless and connection mode operations:

Type 1 - Unacknowledged Connectionless Operation
Type 2 - Connection-mode Operation
Type 3 - Acknowledged Connectionless Operation
Type 4 - Decoupled Acknowledged Connectionless Operation

Types and services 1 through 3 are based on ISO 8802-2. The Type 1 and Type 3 connectionless operations are mandatory for implementation in all systems. The Type 2 connection mode and the Type 4 connectionless mode (decoupled ACK) are optional. Estelle language formal specifications of these four types of data link operation are available via the CNR Implementation Working Group World Wide Web page: http://www-cnrwg.itsi.disa.mil.

5.3.3.1 Type 1 operation. For the purpose of this protocol, Type 1 operation will designate both of the ISO 8802-2 connectionless operations: Type 3 (acknowledged) and Type 1 (unacknowledged).

5.3.3.2 Type 2 operation. With Type 2 operation, a data link connection shall be established between two systems prior to any exchange of information bearing PDUs. For efficiency at system startup, connections may be assumed to exist with all other stations in the network; and the system may depend on information transfer phase procedures to resolve error conditions. To guarantee a reliable (i.e., no loss) service, connections should be explicitly established, not assumed to exist. The connection normally shall remain open until a station leaves the net. The normal communications cycle between Type 2 systems shall consist of transferring PDUs from the source to the destination, and acknowledging receipt of these PDUs in the opposite direction.

5.3.3.3 Type 3 operation. For the purpose of this protocol, Type 3 operation is included in Type 1 operation.

5.3.3.4 Type 4 operation. With Type 4 operation, acknowledgments are decoupled from the original Decoupled Information Acknowledgment (DIA) PDU, and DIA PDUs contain a non-modulus identification number assigned by the originator.

5.3.3.5 Station class. Four station classes define the data link procedures supported by a system:

Station Class A - Supports Types 1 and 3; not Types 2 and 4
Station Class B - Supports Types 1, 2 and 3; not Type 4
Station Class C - Supports Types 1, 3 and 4; not Type 2
Station Class D - Supports Types 1, 2, 3 and 4.

Downloaded from http://www.everyspec.com

5.3.4 Data link frame. The data link frame shall be the basic PDU of the link layer. The Transmission Header is not a PDU.

5.3.4.1 Types of frames. Three types of frames convey data over the data link: an unnumbered frame (U PDUs), an information frame (I PDUs) and a supervisory frame (S PDUs).

5.3.4.1.1 Unnumbered frame. The U PDUs shall be used for Type 1, Type 2 and Type 4 operations. They provide connectionless information transfer for Types 1 and 4 operations. U PDUs provide acknowledgment, and station identification/status information for Type 1 operations. They also provide data link control functions for Type 1 through 4 operations.

5.3.4.1.2 Information frame. The I PDUs are used for information transfer in Type 2 operations only. They convey user data or message traffic across a link. The I PDUs are not used in Type 1 or Type 4 operations.

5.3.4.1.3 Supervisory frame. The S PDUs are optional and are used for data link supervisory control functions and to acknowledge received I PDUs in Type 2 operations. Additionally, the Type 4 Decoupled Receive Ready (DRR) response S PDU is used to acknowledge Type 4 DIA PDUs. The S PDUs are not used in Type 1 operations.

5.3.4.2 Data link frame structure. The basic elements of the data link frame shall be the opening flag sequence, the address field, the control field, the information field, the FCS, and the closing flag sequence. Each Type 1, Type 2 and Type 4 data link frame shall be structured as shown in the data link frame portion of Figure 11. Figure 11a presents the data link frame structure for single octet addressing. Figure 11b presents the data link frame structure for four octet addressing.

Downloaded from http://www.everyspec.com

Transmission Header				One or More Data Link Frame					
Flag	Transmission Information	FCS	Flag	Flag	Address	Control	Information	FCS	Flag
8 bits see 5.3.4.2.1	2 octets see 5.3.1	32 bits see 5.3.4.2.5	8 bits	8 bits	2-17 octets see 5.3.4.2.2	1-32 octets see 5.3.4.2.3	Up to 3345 octets see 5.3.4.2.4	32 bits	8 bits

Figure 11a. Data link frame structure and placement for single octet addressing.

Transmission Header				One or More Data Link Frame					
Flag	Transmission Information	FCS	Flag	Flag	Address	Control	Information	FCS	Flag
8 bits see 5.3.4.2.1	2 octets see 5.3.1	32 bits see 5.3.4.2.5	8 bits	8 bits	6-85 octets see 5.3.4.2.2	1-32 octets see 5.3.4.2.3	Up to 3345 octets see 5.3.4.2.4	32 bits	8 bits

Figure 11b. Data link frame structure and placement for four octets addressing.

FIGURE 11. Data link frame structure and placement.

5.3.4.2.1 Flag sequence. All frames shall start and end with the 8-bit flag sequence of one 0 bit, six 1 bits, and one 0 bit (01111110). The flag shall be used for data link frame synchronization.

5.3.4.2.2 Address fields. These fields shall identify the link addresses of the source and destinations.

5.3.4.2.2.1 Address format. Two link address formats are supported: single octet and four octets. Single octet addressing shall be mandatory and four octet addressing is optional for synchronous, asynchronous, and packet modes of operation. Single octet and four octets shall not be mixed in the same net.

5.3.4.2.2.1.1 Single octet addressing. Each address in the address fields shall consist of a single octet. The source address octet shall consist of a command/response (C/R) designation bit (the LSB) followed by a 7-bit address representing the source. Each destination octet shall consist of an extension bit (the LSB) followed by the 7-bit destination address. The destination address uses a modification of the High-Level Data Link Control (HDLC) extended addressing format. The destination address shall be

Downloaded from http://www.everyspec.com

extended by setting the extension bit of a destination address octet to 0, indicating that the following octet is another destination address. The destination address field shall be terminated by an octet that has the extension bit set to 1. The destination address field shall be extendible from 1 address octet to 16 address octets. The format of the address fields shall be as shown in Figure 12.

5.3.4.2.2.1.2 Four octets addressing. Each address in the address fields shall consist of four octets, except for special, global multicast and group multicast addresses which are a single octet. The four octets of address space shall be preceded by a single octet 32-bit marker subfield. This field, containing a fixed value of 126, is used to indicate that the next four octets contain the actual link layer address. In the source address field the 32-bit marker subfield shall consist of a command/response (C/R) designation bit (the LSB) followed by a 7-bit value=126. In the destination address field the 32-bit marker subfield shall consist of an extension bit (the LSB) followed by the 7-bit value=126. If destination address field is extended, it shall be indicated by setting the extension bit of the 32-bit marker subfield of a destination address octet to 0. This subsequent address may be formatted in either four octets or a single octet (i.e. special, group multicast or global multicast). The destination address field shall be terminated by an octet (either a valid address or the 32-bit marker subfield) that has the extension bit set to 1. The destination address field shall be extendible from 1 address to 16 addresses. When using four octets addressing, the values 0 – 127 (dot notation addressing=0.0.0.0 – 0.0.0.127) are reserved and may not be used.

5.3.4.2.2.2 Addressing convention. The following addressing conventions shall be implemented in the 7 address bits of each address octet or 32-bit marker octet. Address allocations, as shown in Figure 13, are divided among six address types: individual, group, global, 32-bit marker, special, and reserved.

NOTE: Source and destination addresses are assigned by an administrative authority.

5.3.4.2.2.2.1 Source and destination.

5.3.4.2.2.2.1.1 Source address. The source address is either an individual or special (Net Control or Net Entry) address and is always the first address. Either single octet or four octets formatting may be used. Its legal values range from 1 to 95 for single octet format. In four octets format legal values range from 128 to 2^{32}-1 (0.0.0.128 – 255.255.255.255 in dot notation). The first octet of the source address has two parts: the C/R designation bit (bit 1, LSB) and the actual 7-bit address value. The C/R designation bit shall be set to 0 for commands and 1 for responses.

Downloaded from http://www.everyspec.com

MSB							LSB	
8	7	6	5	4	3	2	1	
X	X	X	X	X	X	X	0/1	SOURCE Octet (1 = response; 0 = command)
X	X	X	X	X	X	X	0	DESTINATION 1 Octet
						..	.	
						..	.	
						..	.	
X	X	X	X	X	X	X	1	DESTINATION M Octet where M ≤ 16

Note: In four octets addressing the 32-bit marker octet is followed by the actual four octet address.

FIGURE 12. Extended address field format.

MSB							LSB		
1	1	1	1	1	1	1	1	127	Global Multicast Address
1	1	1	1	1	1	0	X	126	32-bit Marker (4 octet addressing)
1	1	X	X	X	X	X	X	96-125	Group Multicast Addresses
X	X	X	X	X	X	X	X	4-95	Individual Addresses
0	0	0	0	0	1	1	X	3	Special (Immediate Retransmission)
0	0	0	0	0	1	0	X	2	Special (Net Control) Address
0	0	0	0	0	0	1	X	1	Special (Net Entry) Address
0	0	0	0	0	0	0	X	0	Reserved Address

FIGURE 13. Address allocation.

Downloaded from http://www.everyspec.com

5.3.4.2.2.2.1.2 Destination address(es). The second through seventeenth addresses are labeled destination addresses, which may be global, group, individual, or special addresses. Each destination address may be formatted as a single octet or four octets. The first octet of each destination address (an actual address or the 32-bit marker) has two parts: the extension bit (bit 1, LSB) and the actual 7-bit value. An extension bit set to 0 indicates that 1 or more addresses (of either single octet or four octets formats) follow. An extension bit set to 1 indicates the last address of the address string has been reached.

5.3.4.2.2.2.2 Types of addresses. The following paragraphs describe the six types of addresses octets and how they shall be used.

5.3.4.2.2.2.2.1 Reserved address. Address 0 is labeled a reserved address. A station receiving a value of 0 in the destination address field shall ignore the address and continue processing any remaining addresses.

5.3.4.2.2.2.2.2 Special addresses. Addresses 1, 2 and 3 are labeled special addresses. Addresses 1 and 2 are provided as network control (NETCON) and unit entry addresses for units entering a new network without knowledge of actual addresses being used. These special addresses are used as described in Appendix E (E.5.1). The special address 3 is used for Type 1 acknowledged transmissions which require an immediate retransmission capability.

5.3.4.2.2.2.2.3 32-bit marker subfield. The 32-bit marker subfield is used to indicate the four octets immediately following it represent a four octet individual address. This subfield has a value=126.

5.3.4.2.2.2.2.4 Individual addresses. Individual addresses uniquely identify a single station on a broadcast subnetwork. Individual addresses may be a single octet or four octets in length. Individual single octet addresses shall be assigned within the address range 4 to 95. Individual four octets addresses shall be assigned within the address range 128 to 2^{32}-1 (0.0.0.128 to 255.255.255.255 in dot notation). Stations shall be capable of sending and receiving 1 to 16 individual destination addresses in a single data link frame. Sending stations shall use any individual address just once in a data link frame. When individual address(es) are present, a receiving station shall receive all addresses, search for its unique individual address, and follow the media access procedures described in Appendix C.

5.3.4.2.2.2.2.5 Group multicast addresses. Group multicast addressing, used when broadcasting messages to multiple (but not all) stations on a broadcast subnetwork, may be implemented. The valid address range shall be 96 to 125. Assignment of membership to (or deletion from) a group is outside the scope of this protocol. While the use of link group multicast addresses is optional, all stations shall be capable of recognizing received group addresses. If a receiving station does not implement group addressing procedures, it shall still process all received addresses, but ignore the group addresses (that is, recognize range 96 to 125 as group addresses). When group addressing is implemented, a station

Downloaded from http://www.everyspec.com

shall be capable of sending and receiving 1 to 16 destination group addresses. Coupled data link acknowledgment of group multicast addresses using the F-bit shall not be allowed. An uncoupled TEST response PDU with its F-bit set to zero shall be sent in response to a TEST command PDU addressed to a group multicast address when the receiving station is a member of the specified group.

5.3.4.2.2.2.2.6 Individual, special and multicast addresses mixed. A station that optionally implements multicast (group and global) addressing shall also be capable of sending and receiving multicast, special and individual addresses "mixed" in a destination address subfield. All stations shall be capable of receiving mixed addresses. The reception and acknowledgment procedures stated in this paragraph shall be valid even for stations that do not implement multicast addressing procedures.

a. The total number of destination addresses shall not exceed 16.

b. This paragraph is left blank to maintain paragraph conformity.

c. All individual and special addresses shall precede multicast addresses.

d. The special address 3, if used, shall follow all individual, reserved, and other special addresses. It may precede group or global addresses, but shall not precede individual, reserved or other special addresses.

e. Only one type of multicast (group or global) shall be mixed in a destination address subfield.

f. If multicast, special and individual addresses are mixed, only the individual and special addresses shall be acknowledged when indicated.

g. Multicast addresses shall not be acknowledged but a data link response (using a TEST Response PDU) is allowed in the case where a TEST message is received with a multicast address in the destination field and the poll bit is set to 0.

h. A station that optionally implements multicast (group and global) addressing shall also be capable of sending and receiving multicast, special and individual addresses "mixed" in a destination subfield.

5.3.4.2.2.2.2.7 Global multicast addressing. Global multicast addressing, used when broadcasting messages to all systems on a broadcast subnetwork, shall be implemented through the unique bit pattern 1111111 (127). This global multicast address shall be used to indicate broadcasting in single octet format and four octets format of addressing. If the global address is used, it shall be the only multicast destination address, but individual addresses are allowed with the global address. All broadcast stations

Downloaded from http://www.everyspec.com

shall be capable of receiving and sending this address, and all stations will process the information contained within the frame. Data link acknowledgment of the global address shall not be allowed, although the TEST response PDU is allowed in the case where a TEST message is received with the global address in the destination field and the poll bit is set to 0. Coupled data link acknowledgment of the global address using the F-bit shall not be allowed. An uncoupled TEST response PDU with its F-bit set to zero shall be sent in response to a TEST command PDU addressed to the global address.

5.3.4.2.2.3 Mapping. A link address is a point of attachment to a broadcast network. The upper-layer protocol is responsible for mapping one or more upper-layer addresses to a data link address. Multiple upper-layer addresses may map to one or more group or individual addresses.

5.3.4.2.3 Control field. The control field indicates the type of PDU and the response requirements and connection information about the PDU being transmitted over the data link. A summary of the formats and bit patterns (showing MSB as the left most bit) for Types 1, 2 and 4 is shown in Tables IV, V and VI, respectively. Figure 14 illustrates the data link PDU control field formats.

Downloaded from http://www.everyspec.com

TABLE IV. Type 1 PDU formats.

COMMANDS/ RESPONSES	ADDRESS FIELD	CONTROL FIELD The left-most bit is the most significant bit.	INFORMATION FIELD
U PDUs			
UNNUMBERED INFORMATION (UI) COMMAND ACKNOWLEDGMENT REQUIRED	Contains the source address and up to 16 individual, special, group or global addresses that are to respond.	Bit pattern = 00010011 identifies this frame as a UI PDU requiring acknowledgment.	Contains data from the upper protocol layer.
UNNUMBERED INFORMATION (UI) COMMAND ACKNOWLEDGMENT NOT REQUIRED	Contains the source address and up to 16 individual, special, group or global addresses for which the message is intended.	Bit pattern = 00000011 identifies this frame as a UI PDU not requiring acknowledgment.	Contains data from the upper protocol layer.
UNNUMBERED RECEIVE READY (URR) COMMAND	Contains the source address, and up to 16 individual, group or global addresses to indicate that the sending station is ready to receive I, DIA and UI PDUs.	Bit pattern = 00100011 indicating receive ready command.	No information field allowed.
UNNUMBERED RECEIVE READY (URR) RESPONSE	Contains the source address and the destination address of a received UI PDU, to which this frame acknowledges.	Bit pattern = 00110011 indicating last UI PDU is acknowledged.	No information field allowed.
UNNUMBERED RECEIVE NOT READY (URNR) COMMAND	Contains the source address and up to 16 individual, group or global addresses to indicate that the sending station is busy and can not receive I, DIA and UI PDUs.	Bit pattern = 00001011 indicating receive not ready command.	No information field allowed.
UNNUMBERED RECEIVE NOT READY (URNR) RESPONSE	Contains the source address and the destination address to which this response is being sent.	Bit pattern = 00011011 indicating receive not ready response.	No information field allowed.
TEST COMMAND	Contains the source address and up to 16 individual, group or global addresses that are to respond.	Bit pattern = 111X0011 indicating test command.	Information field optional.
TEST RESPONSE	Contains the source address and the destination address to which this response is being sent.	Bit pattern = 111X0011 indicating test response.	Information field optional.

Downloaded from http://www.everyspec.com

TABLE V. Type 2 PDU formats.

COMMANDS/ RESPONSES	ADDRESS FIELD	CONTROL FIELD The left-most bit is the most significant bit.	INFORMATION FIELD
U PDUs			
SET ASYNCHRONOUS BALANCED MODE EXTENDED (SABME) COMMAND	Contains the source address and up to 16 individual addresses of stations to receive this PDU.	Bit pattern = 001X1111	No information field allowed.
DISCONNECT (DISC) COMMAND	Contains the source address and up to 16 individual addresses of stations to receive this PDU.	Bit pattern = 010X0011	No information field allowed.
RESET (RSET) COMMAND	Contains the source address and up to 16 individual addresses of stations to receive this PDU.	Bit pattern = 100X1111	No information field allowed.
UNNUMBERED ACKNOWLEDGMENT (UA) RESPONSE	Contains the source address and up to 16 individual addresses of stations to receive this PDU.	Bit pattern = 011X0011	No information field allowed.
DISCONNECT MODE (DM) RESPONSE	Contains the source address and up to 16 individual addresses of stations to receive this PDU.	Bit pattern = 000X1111	No information field allowed.
FRAME REJECT (FRMR) RESPONSE	Contains the source address and up to 16 individual addresses of stations to receive this PDU.	Bit pattern = 100X0111	See Figure 19.
I PDU			
ACKNOWLEDGMENT OR OTHER APPROPRIATE RESPONSE REQUIRED	Contains the source address and up to 16 individual, group or global addresses for which the message is intended.	Bit pattern = RRRRRRRXSSSSSSS0. Identifies this frame as an I PDU.	Contains data from the upper protocol layer.

Downloaded from http://www.everyspec.com

TABLE V. Type 2 PDU formats - Continued.

COMMANDS/ RESPONSES	ADDRESS FIELD	CONTROL FIELD The left-most bit is the most significant bit.	INFORMATION FIELD
S PDUs			
RECEIVE READY (RR) COMMAND	Contains the source address and up to 16 individual addresses of stations to receive this PDU.	Bit pattern = RRRRRRRX00000001, indicating receive ready command.	No information field allowed.
RECEIVE READY (RR) RESPONSE	Contains the source address and up to 16 individual addresses of stations to receive this PDU.	Bit pattern = RRRRRRRX00000001, indicating last I PDU is acknowledged.	No information field allowed.
RECEIVE NOT READY (RNR) COMMAND	Contains the source address and up to 16 individual addresses of stations to receive this PDU.	Bit pattern = RRRRRRRX00000101, indicating receive not ready command.	No information field allowed.
RECEIVE NOT READY (RNR) RESPONSE	Contains the source address and up to 16 individual addresses of stations to receive this PDU.	Bit pattern = RRRRRRRX00000101, indicating receive not ready response.	No information field allowed.
SELECTIVE REJECT (SREJ) COMMAND	Contains the source address and up to 16 individual addresses of stations to receive this PDU.	Bit pattern = RRRRRRRX00001101 indicating selective reject command.	No information field allowed.
SELECTIVE REJECT (SREJ) RESPONSE	Contains the source address and up to 16 individual addresses of stations to receive this PDU.	Bit pattern = RRRRRRRX00001101 indicating selective reject response.	No information field allowed.
REJECT (REJ) COMMAND	Contains the source address and up to 16 individual addresses of stations to receive this PDU.	Bit pattern = RRRRRRRX00001001 indicating reject command.	No information field allowed.
REJECT (REJ) RESPONSE	Contains the source address and up to 16 individual addresses of stations to receive this PDU.	Bit pattern = RRRRRRRX00001001 indicating reject response.	No information field allowed.

(X represents the P/F bit setting, S represents send sequence number, and R represents receive sequence number.)

Downloaded from http://www.everyspec.com

TABLE VI. Type 4 PDU formats.

COMMANDS/ RESPONSES	ADDRESS FIELD	CONTROL FIELD The left-most bit is the most significant bit.	INFORMATION FIELD
U PDU			
DECOUPLED INFORMATION ACKNOWLEDGEMENT (DIA)	Contains the source address and up to 16 individual, group or global addresses for which the message is intended.	Bit pattern = <ID #->LL101011 L-bits are used to indicate PDU precedence.	Contains data from the upper protocol layer.
S PDUs			
DECOUPLED RECEIVE READY (DRR) COMMAND	Contains the source address and up to 16 individual, group or global address.	Bit pattern = 00000000LL010001 indicates a station is ready to receive DIA PDUs.	No information field allowed.
DECOUPLED RECEIVE READY (DRR) RESPONSE	Contains the source address and individual address for the originator of the DIA PDU which this PDU ACKs.	Bit pattern = <ID #->LL010001 L-bits are used to indicate precedence of PDU being acknowledged. The ID no. is that of the DIA PDU being acknowledged.	No information field allowed.
DECOUPLED RECEIVE NOT READY (DRNR) COMMAND	Contains the source address and up to 16 individual, group or global address.	Bit pattern = 00000000LL010101 indicates a station is not ready to receive DIA PDUs due to a busy condition.	No information field allowed.
DECOUPLED RECEIVE NOT READY (DRNR) RESPONSE	Contains the source address and individual address for the originator of the DIA PDU which this PDU ACKs.	Bit pattern = <ID #->LL010101 L-bits are used to indicate precedence of PDU being acknowledged. The ID no. is that of the DIA PDU being acknowledged. PDU indicates a station is not ready to receive DIA PDUs due to a busy condition.	No information field allowed.

Downloaded from http://www.everyspec.com

		MSB 16	15	14	13	12	11	10	9	8	7	6	5	4	3	2	LSB 1
INFORMATION TRANSFER	Type 2	N(R)							P/F	N(S)							0
SUPERVISORY COMMANDS/RESPONSES (S PDUs)	Type 2	N(R)							P/F	Z	Z	Z	Z	S	S	0	1
	Type 4	ID Number								L	L	0	1	S	S	0	1
UNNUMBERED COMMANDS/RESPONSES (U PDUs)	Types 1 & 2									M	M	M	P/F	M	M	1	1
	Type 4	ID Number								L	L	1	0	1	0	1	1

Notes:

The LSB is the first bit delivered to and received from the physical layer.

N(S) = Transmitter send sequence number (Bit 2 = LSB)
N(R) = Transmitter receive sequence number (Bit 10 = LSB)
S = Supervisory Function bit
M = Modifier function bit
Z = Reserved and set to zero
P/F = Poll bit - command PDU transmissions
Final bit - response PDU transmissions
(1 = Poll/Final)
L = Level of precedence (LSB on right)
1 1 = reserved (value = 3)
1 0 = routine (value = 2)
0 1 = priority (value = 1)
0 0 = urgent (value = 0)

FIGURE 14. Data link PDU control field formats.

5.3.4.2.3.1 Type 1 operations. For Type 1 operations, the control field is an 8-bit pattern designating 1 of 5 types of U PDUs. The URR and URNR PDUs are used to indicate overall station status.

Downloaded from http://www.everyspec.com

5.3.4.2.3.2 Type 2 operations. The Type 2 control field is a 16-bit pattern for I PDUs and S PDUs and includes sequence numbers. The Type 2 U PDUs have an 8-bit pattern. The Type 2 control field shall be repeated if more than one destination address is present. Each destination address field shall have a corresponding control field. Each of the corresponding control fields (when repeated) shall be identical except for the P/F bit and sequence numbers. The Type 1 Unnumbered Receive Ready (URR) and Unnumbered Receive Not Ready (URNR) PDUs are used to indicate overall station status. The RR and RNR are used to indicate station status for Type 2 operations only.

5.3.4.2.3.3 Type 4 operations. The Type 4 control field is a 16-bit pattern for U PDUs and S PDUs, and includes identification numbers. The control field distinguishes between a DIA PDU with a frame identification number and four S PDUs used in a connectionless environment with decoupled acknowledgments. The Type 1 URR and URNR are used to indicate overall station status. The DRR and Decoupled Receive Not Ready (DRNR) PDUs are used to indicate station status for Type 4 operations only.

5.3.4.2.3.4 Poll/final (P/F) bit. The P/F bit serves a function in both command and response PDUs. In command PDUs, the P/F bit is referred to as the P-bit. In response PDUs, it is referred to as the F-bit. The P-bit set to 1 shall be used to solicit a response PDU, with the F-bit set to 1. On a data link, at most one PDU with P-bit set to 1 shall be outstanding in a given direction at a given time. Before a station issues another PDU with the P-bit set to 1 to a particular destination, it shall have received a response PDU from that remote station with the F-bit set to 1 or have timed out waiting for that response PDU. The P/F bit is not implemented in Type 4 operations.

5.3.4.2.3.5 Sequence numbers. Sequence numbers are used only with Type 2 I and S PDUs. The Type 2 I and S PDUs shall contain sequence numbers. The sequence numbers shall be in the range of 0-127.

5.3.4.2.3.6 Identification numbers. Identification numbers are used only with Type 4 DIA PDUs and DRR/DRNR S PDUs. The Type 4 DIA and DRR/DRNR response S PDUs shall contain an identification number. The identification number is used to identify each DIA PDU and permit decoupled acknowledgments in a connectionless environment. The identification numbers shall be in the range of 1-255. The identification number of an S PDU command (bits 9-16) shall be filled with zeroes.

5.3.4.2.3.7 Precedence. The two level-of-precedence bits (L-bits) are used only in the control field of Type 4 PDUs. In the DIA PDU, the L-bits indicate the precedence of the data in the information field. In the DRR response S PDU, the L-bits are used to indicate the precedence of the DIA PDU information being acknowledged. The data link precedence values and their appropriate mappings to network layer precedence levels are indicated in 5.3.16.

Downloaded from http://www.everyspec.com

5.3.4.2.4 Information field. The information field may be present in either the I, UI, DIA, FRMR or TEST PDU. The length of the information field shall be a multiple of 8 bits, not to exceed 3345 octets. If the data is not a multiple of 8 bits, 1 to 7 fill bits (0) shall be added to meet this requirement. The maximum information field size defaults to 3345 octets. A smaller size may be established at initialization through local system information or using the exchange network parameters (XNP) messages (see Appendix E). Contents of the information fields of the FRMR TEST command and TEST response PDUs are described in 5.3.6.2.3.6, 5.3.6.1.4 and 5.3.6.1.7, respectively.

5.3.4.2.5 Frame check sequence. For error detection, all frames shall include a 32-bit FCS prior to the closing flag sequence. The contents of the address, control, and information fields are included in the FCS calculation. Excluded from the FCS calculation are the 0's inserted by the 0-bit insertion algorithm. The formula for calculating the FCS, which is the 1's complement (inversion) of the remainder of a modulo-2 division process, employs the generator polynomial, P(X), having the form

$$P(x) = x^{32} + x^{26} + x^{23} + x^{22} + x^{16} + x^{12} + x^{11} + x^{10} + x^{8} + x^{7} + x^{5} + x^{4} + x^{2} + x + 1$$

FCS generation shall be in accordance with the paragraph entitled "32-bit Frame Checking Sequence" in ISO 3309, and implemented in a manner that provides a unique remainder when a frame is received without bit errors incurred during transmission. (Note: When the FCS is implemented via a 32-bit shift register, the shift register shall be initialized to all ones before checking or calculation of the FCS). If the FCS of a received frame proves the frame to be invalid, the frame shall be discarded.

5.3.4.3 Data link PDU construction. The data link procedures that affect data link PDU construction include (a) order-of-bit transmission and 0-bit insertion, discussed below; and (b) FEC and TDC, discussed in 5.3.14.

5.3.4.3.1 Order-of-bit transmission. The order-of-bit transmission function specifies the sequence in which bits are ordered by the data link layer for transmission by the PL. The Information Field and control field(s) shall be transmitted LSB of each octet first. The flag shall be transmitted LSB first. For the FCS, the most significant bit (MSB) shall be transmitted first. For the address field, the source address octet is transmitted first and the destination address octet(s) are transmitted in order. The LSB of each address octet is transmitted first. The information field octets shall be transmitted in the same order as received from the upper layers, LSB of each octet first.

5.3.4.3.2 Zero-bit insertion algorithm. The occurrence of a spurious flag sequence within a frame or Transmission Header shall be prevented by employing a 0-bit insertion algorithm. After the entire frame has been constructed, the transmitter shall always insert a 0 bit after the appearance of five 1's in the frame (with the exception of the flag fields). After detection of an opening flag sequence, the receiver shall search for a pattern of five 1's. When the pattern of five 1's appears, the sixth bit shall be examined. If the sixth bit is a 0, the 5 bits shall be passed as data, and the 0 shall be deleted. If the sixth bit is a 1, the

Downloaded from http://www.everyspec.com

receiver shall inspect the seventh bit. If the seventh bit is a 0, a flag sequence has been received. If the seventh bit is a 1, an invalid message has been received and shall be discarded.

5.3.5 Operational parameters. The various parameters associated with the control field formats are described in the following sections.

5.3.5.1 Type 1 operational parameters. The only parameter that exists in Type 1 operation is the P/F bit. The Poll (P) bit set to 1 shall be used to solicit (poll) an immediate correspondent response PDU with the Final (F) bit set to 1 from the addressed station. The response with F-bit set to 1 shall be transmitted in accordance with the response hold delay (RHD) procedures defined in Appendix C (C.4.2).

5.3.5.2 Type 2 operational parameters. The various parameters associated with the control field formats in Type 2 operation are described in 5.3.5.2.1 to 5.3.5.2.3.2.

5.3.5.2.1 Modulus. Each I PDU shall be sequentially numbered with a numeric value between 0 and MODULUS minus ONE (where MODULUS is the modulus of the sequence numbers). MODULUS shall equal 128 for the Type 2 control field format. The sequence numbers shall cycle through the entire range. The maximum number of sequentially numbered I PDUs that may be outstanding (that is, unacknowledged) in a given direction of a data link connection at any given time shall never exceed one less than the modulus of the sequence numbers. This restriction will prevent any ambiguity in the association of sent I PDUs with sequence numbers during normal operation and error recovery action.

5.3.5.2.2 PDU-state variables and sequence numbers. A station shall maintain a send-state variable, V(S), for the I PDUs it sends and a receive-state variable, V(R), for the I PDUs it receives on each data link connection. The operation of V(S) shall be independent of the operation of V(R).

5.3.5.2.2.1 Send-state variable V(S). The V(S) shall denote the sequence number of the next in-sequence I PDU to be sent on a specific data link connection. The V(S) shall take on a value between 0 and MODULUS minus ONE. The value of V(S) shall be incremented by one with each successive I PDU transmission on the associated data link connection, but shall not exceed receive sequence number N(R) of the last received PDU by more than MODULUS minus ONE.

5.3.5.2.2.2 Send-sequence number N(S). Only I PDUs shall contain N(S), the send sequence number of the sent PDU. Prior to sending an I PDU, the value of N(S) shall be set equal to the value of the V(S) for that data link connection.

5.3.5.2.2.3 Receive-state variable V(R). The V(R) shall denote the sequence number of the next in-sequence I PDU to be received on a specific data link connection. The V(R) shall take on a value between 0 and MODULUS minus ONE. The value of the V(R) associated with a specific data link

Downloaded from http://www.everyspec.com

connection shall be incremented by one whenever an error-free I PDU is received whose N(S) equals the value of the V(R) for the data link connection.

5.3.5.2.2.4 Receive-sequence number N(R). All I and S PDUs shall contain N(R), the expected sequence number of the next received I PDU on the specified data link connection. Prior to sending an I or S PDU, the value of N(R) shall be set equal to the current value of the associated V(R) for that data link connection. N(R) shall indicate that the station sending the N(R) has received correctly all I PDUs numbered up through N(R)-1 on the specified data link connection.

5.3.5.2.3 Poll/final (P/F) bit. The P/F bit shall serve a function in Type 2 operation in both command and response PDUs. In command PDUs the P/F bit shall be referred to as the P-bit. In response PDUs it shall be referred to as the F-bit. P/F bit exchange provides a distinct C/R linkage that is useful during both normal operation and recovery situations.

5.3.5.2.3.1 Poll-bit functions. A command PDU with the P-bit set to 1 shall be used to solicit (poll) a response PDU with the F-bit set to 1 from the addressed station on a data link connection. Only one Type 2 PDU with a P-bit set to 1 shall be outstanding in a given direction at a given time on the data link connection between any specified pair of stations. Before a station issues another PDU on the same data link connection with the P-bit set to 1, the station shall have received a response PDU with the F-bit set to 1 from the addressed station. If no valid response PDU is received within a system-defined P-bit timer time-out period, the resending of a command PDU with the P-bit set to 1 shall be permitted for error recovery purposes.

5.3.5.2.3.2 Final-bit functions. The F-bit set to 1 shall be used to respond to a command PDU with the P-bit set to 1. Following the receipt of a command PDU with the P-bit set to 1, the station shall send a response PDU with the F-bit set to 1 on the appropriate data link connection at the first possible opportunity. First possible opportunity is defined as transmitting the frame ahead of other frames at the next network access opportunity. The response PDU shall be assigned an URGENT precedence. The station shall be permitted to send appropriate response PDUs with the F-bit set to 0 at any net access opportunity without the need for a command PDU.

5.3.5.3 Type 4 operational parameters. The two parameters associated with the control field formats in Type 4 operation are precedence described in 5.3.4.2.3.7 and Identification number.

5.3.5.3.1 Identification number. The Identification number field is used in conjunction with the originator's station address to identify the PDU. The station's identification number is assigned just prior to the initial transmission of the PDU. This number is not changed on link layer retransmission of the PDU. Each station shall keep a number for originating PDUs. Duplicate frame identification numbers from the same originator shall not be used for more than one outstanding (unacknowledged) DIA PDU.

Downloaded from http://www.everyspec.com

5.3.5.3.2 Type 4 duplicate frame detection. Each Type 4 frame received shall be time-stamped at arrival. When a subsequent Type 4 frame arrives which matches the link layer address and identification number, a delta arrival time is calculated as follows:

[new frame arrival time] - [logged frame arrival time] = [delta arrival time]

If the delta arrival time is within the Link Layer Tolerance Interval (Ltol), the arriving packet is considered a duplicate and discarded. A maximum Link Layer Tolerance Interval shall be calculated for each arriving frame, which is logged per the equation below. The Link Layer Tolerance Interval value is configurable up to a maximum of 3 times the Type 4 ACK timer.

Link Layer Tolerance Interval (Ltol) < or = 3*(Type 4 ACK timer)

5.3.6 Commands and responses. This section defines the commands and associated responses. Definitions of the set of commands and responses for each of the control field formats for Type 1, Type 2 and Type 4 operations, respectively, are contained in 5.3.6.1, 5.3.6.2 and 5.3.6.3. The C/R bit, the LSB of the source address field, is used to distinguish between commands and responses. The following discussion of commands and responses assumes that the C/R bit has been properly decoded. A single multi-addressed frame shall not contain different PDU types nor contain the same individual address more than once. The control field for all addresses in a single multi-addressed frame shall be the same except for the P/F bit and sequence number. Some of the commands described in the following paragraphs require a response at the earliest opportunity. Response PDUs requiring “earliest opportunity” transmission shall be queued ahead of all other PDUs, except those queued for “first possible opportunity” for transmission during the next network access opportunity. The response PDU shall assume the precedence level of the highest PDU queued or the mid (PRIORITY) level, whichever is greater. The Type 4 DRR response PDU shall assume the precedence of the DIA frame it is acknowledging.

5.3.6.1 Type 1 operation commands and responses. Type 1 commands and responses are all U PDUs. The U PDU encodings for Type 1 operations are listed in Figure 15.

Downloaded from http://www.everyspec.com

FIRST CONTROL FIELD BIT DELIVERED TO/RECEIVED FROM THE PHYSICAL LAYER								
LSB							MSB	
1	2	3	4	5	6	7	8	Bit Position
1	1	0	0	P	0	0	0	UI Command
1	1	0	0	0	1	0	0	URR Command
1	1	0	0	1	1	0	0	URR Response
1	1	0	1	0	0	0	0	URNR Command
1	1	0	1	1	0	0	0	URNR Response
1	1	0	0	P/F	1	1	1	Test Command/Response

FIGURE 15. Type 1 operation control-field bit assignments.

5.3.6.1.1 Unnumbered information (UI) command. The UI PDU shall be used to send information to one or more stations. The P-bit of the control field of the UI PDU is used by the transmitter to request that individually addressed receiver(s) acknowledge receipt of the transmitted UI PDU or to specify that an acknowledgment is not required. The UI PDU shall be addressed to individual, special, group, or global addresses. The source address shall be the individual address of the transmitting station.

5.3.6.1.2 Unnumbered receive-ready (URR) command. The URR command PDU shall be transmitted to one or more stations to indicate that the sending station is ready to receive I, DIA and UI PDUs. The URR PDU shall be addressed to individual, group, or global addresses. The source address shall be the individual address of the transmitting station.

5.3.6.1.3 Unnumbered receive-not-ready (URNR) command. The URNR command PDU shall be transmitted to one or more stations to indicate that the sending station is busy and cannot receive I, DIA or UI PDUs. The URNR PDU shall be addressed to individual, group, or global addresses. The source address shall be the individual address of the transmitting station.

5.3.6.1.4 Test (TEST) command. The TEST command shall be used to cause the destination station to respond with the TEST response at the earliest opportunity, thus performing a basic test of the transmission path. An information field is optional with the TEST command PDU. It may contain any bit pattern, but is limited to a maximum length of 128 octets. If present, however, the received information field shall be returned, if possible, by the addressed station in the TEST response PDU. The TEST command, with the P-bit set to 1, shall cause the individually addressed destination station(s) to respond with a TEST response PDU (with no information field), with the F-bit set to 1, after the appropriate RHD period (see C.4.2). The TEST command, with the P-bit set to 0 shall cause each destination station (including members of group and global addresses) to respond with a TEST response (with information

Downloaded from http://www.everyspec.com

field) with the F-bit set to 0 at the earliest opportunity. Group and global addressees do not reply to a TEST command with the P-bit set to 1. The TEST command PDU shall be addressed to an individual and/or group or global destination addresses. The source address shall be an individual address.

5.3.6.1.5 This paragraph is left blank to maintain paragraph conformity.

5.3.6.1.6 Unnumbered receive-ready (URR) response. The URR response shall be used to acknowledge a UI command that requested an acknowledgment (P-bit set to 1). The URR response shall be the first PDU sent by the receiving station upon receiving a UI command after the appropriate RHD period (see C.4.2). The source and destination shall be individual addresses.

5.3.6.1.7 Test (TEST) response. The TEST response, with F-bit set to 1, without an information field shall be used by individual addressees to reply to the TEST command with the P-bit set to 1. The TEST response shall be the first PDU sent by the receiving station upon receiving a TEST command PDU, after the appropriate RHD period (see C.4.2). Group and global addressees do not reply to TEST command with P-bit set to 1. The TEST response, with F-bit set to 0, shall be used by all addressees (individual, group and global) to reply to the TEST command with the P-bit set to 0 at the earliest opportunity. If an information field was present in the TEST command PDU that had the P-bit set to 0, the TEST response PDU shall contain the same information field contents. If the station cannot accept the information field of the TEST command, a TEST response without an information field may be returned. The source and destination addresses shall be an individual address.

5.3.6.1.8 This paragraph is left blank to maintain paragraph conformity.

5.3.6.1.9 Unnumbered receive-not-ready (URNR) response. The URNR response PDU shall be used to reply to a UI command with the P-bit set to 1, if the UI command cannot be processed due to a busy condition. The URNR response PDU does not contain any acknowledgment information. If used, the URNR response shall be the first PDU transmitted by the receiving station, upon receiving a UI command, after the appropriate RHD period (see C.4.2). The URNR response shall have the F-bit set to 1 and shall be addressed to the source of the UI command.

5.3.6.2 Type 2 operation commands and responses. Type 2 commands and responses consist of I, S, and U PDUs.

5.3.6.2.1 Information-transfer-format command and response. The function of the information (I) command and response shall be to transfer sequentially numbered PDUs that contain an information field across a data link connection. N(S) and N(R) associated with group and global addresses shall be set to zero by the transmitter and ignored by the receiver and are not acknowledged. The encoding of the I PDU control field for Type 2 operation shall be as listed in Figure 16.

Downloaded from http://www.everyspec.com

The I PDU control field shall contain two sequence number subfields: N(S), which shall indicate the sequence number associated with the I PDU; and N(R), which shall indicate the sequence number (as of the time the PDU is sent) of the next expected I PDU to be received, and, consequently, shall indicate that the I PDUs numbered up through N(R)-1 have been received correctly.

FIRST CONTROL FIELD BIT DELIVERED TO/RECEIVED FROM THE PHYSICAL LAYER LSB			MSB
1	2 3 4 5 6 7 8	9	10 11 12 13 14 15 16
0	N(S)	P/F	N(R)
INFORMATION TRANSFER FORMAT	SEND SEQUENCE NUMBER (0-127)	COMMAND (POLL) RESPONSE (FINAL)	RECEIVE SEQUENCE NUMBER (0-127)

FIGURE 16. Information-transfer-format control field bits.

5.3.6.2.2 Supervisory-format commands and responses. Supervisory (S) PDUs shall be used to perform numbered supervisory functions such as acknowledgments, temporary suspension of information transfer, or error recovery. S PDUs shall not contain an information field and, therefore, shall not increment the V(S) at the sender or the V(R) at the receiver. Encoding of the S PDU control field for Type 2 operation shall be as shown in Figure 17. An S PDU shall contain an N(R), which shall indicate, at the time of sending, the sequence number of the next expected I PDU to be received. This shall acknowledge that all I PDUs numbered up through N(R)-1 have been received correctly, except in the case of the selective reject (SREJ) PDU. The use of N(R) in the SREJ PDU is explained in 5.3.6.2.2.4.

Downloaded from http://www.everyspec.com

FIRST CONTROL FIELD BIT DELIVERED TO/RECEIVED FROM THE PHYSICAL LAYER LSB				MSB
1 2	3 4	5 6 7 8	9	10 11 12 13 14 15 16
1 0	S S	X X X X	P/F	N(R)
		\----------/		\----------/
SUPER-VISORY FORMAT		RESERVED SET TO 0	COMMAND (POLL) RESPONSE (FINAL)	RECEIVE SEQUENCE NUMBER (0-127)

COMMANDS/RESPONSES	S S
RECEIVE READY (RR)	00 (value 0)
RECEIVE NOT READY (RNR)	10 (value 1)
REJECT (REJ)	01 (value 2)
SELECTIVE REJECT (SREJ)	11 (value 3)

FIGURE 17. Supervisory-format control field bits.

5.3.6.2.2.1 Receive-ready (RR) command and response. The RR PDU shall be used by a station to indicate it is ready to receive I PDUs. I PDUs numbered up through N(R)-1 shall be considered as acknowledged.

5.3.6.2.2.2 Reject (REJ) command and response. The REJ PDU shall be used by a station to request the resending of I PDUs, starting with the PDU numbered N(R). I PDUs numbered up through N(R)-1 shall be considered as acknowledged. It shall be possible to send additional I PDUs awaiting initial sending after the resent I PDUs. With respect to each direction of sending on a data link connection, only one “sent REJ” condition shall be established at any given time. The “sent REJ” condition shall be cleared upon receipt of an I PDU with an N(S) equal to the N(R) of the REJ PDU. The “sent REJ” condition may be reset in accordance with procedures described in 5.3.7.2.5.4. Receipt of a REJ PDU shall indicate the clearance of a busy condition except as noted in 5.3.7.2.5.8.

5.3.6.2.2.3 Receive-not-ready (RNR) command and response. The RNR PDU shall be used by a station to indicate a busy condition (a temporary inability to accept subsequent I PDUs). I PDUs numbered up through N(R)-1 shall be considered as acknowledged. I PDUs numbered N(R) and any subsequent I PDUs received shall not be considered as acknowledged; the acceptance status of these PDUs shall be indicated in subsequent exchanges.

Downloaded from http://www.everyspec.com

5.3.6.2.2.4 Selective-reject (SREJ) command and response. The SREJ PDU is used by a station to request retransmission of the single I PDU numbered N(R). If the P-bit in the SREJ PDU is set to 1, then I PDUs numbered up to N(R)-1 shall be considered acknowledged. If the P-bit is set to 0, then the N(R) of the SREJ PDU does not indicate acknowledgment of any I PDUs. Each SREJ exception condition shall be cleared (reset) upon receipt of an I PDU with an N(S) equal to the N(R) of the SREJ PDU. A data station may transmit one or more SREJ PDUs, each containing a different N(R) with the P-bit set to 0, before one or more earlier SREJ exception conditions have been cleared. I PDUs that have been transmitted following the I PDU designated by the SREJ PDU shall not be retransmitted as the result of receiving the SREJ PDU. Additional I PDUs awaiting initial transmission may be transmitted following the retransmission of the specific I PDU requested by the SREJ PDU. The SREJ is used to recover from receipt of frames with various types of errors, including sequence number errors due to lost frames and FCS errors.

5.3.6.2.3 Unnumbered format (U) commands and responses. U commands and responses shall be used in Type 2 operations to extend the number of data link connection control functions. The U PDUs shall not increment the state variables on the data link connection at either the sending or the receiving station. Encoding of the U PDU control field shall be as in Figure 18.

5.3.6.2.3.1 Set asynchronous balanced mode extended (SABME) command. The SABME command PDU shall be used to establish a data link connection to the destination station in the ABM. No information shall be permitted with the SABME command PDU. The destination station shall confirm receipt of the SABME command PDU by sending a UA response PDU on that data link connection at the earliest opportunity. Upon acceptance of the SABME command PDU, the destination station V(S)s and V(R)s shall be set to 0. If the UA response PDU is received correctly, then the initiating station shall also assume the ABM with its corresponding V(S)s and V(R)s set to 0. Previously sent I PDUs that are unacknowledged when this command is executed shall remain unacknowledged. A station may resend the contents of the information field of unacknowledged outstanding I PDUs.

Downloaded from http://www.everyspec.com

FIRST CONTROL FIELD BIT DELIVERED TO/RECEIVED FROM THE PHYSICAL LAYER								
LSB							MSB	
1	2	3	4	5	6	7	8	
1	1	1	1	P	1	0	0	SABME Command
1	1	0	0	P	0	1	0	DISC Command
1	1	1	1	P	0	0	1	RSET Command
1	1	0	0	F	1	1	0	UA Response
1	1	1	1	F	0	0	0	DM Response
1	1	1	0	F	0	0	1	FRMR Response

FIGURE 18. Unnumbered-format control field bits.

5.3.6.2.3.2 Disconnect (DISC) command. The DISC command PDU shall be used to terminate an ABM previously set by a SABME command PDU. It shall be used to inform the destination station that the source station is suspending operation of the data link connection and the destination station should assume the logically disconnected mode. No information field shall be permitted with the DISC command PDU. Prior to executing the command, the destination station shall confirm the acceptance of the DISC command PDU by sending a UA response PDU on that data link connection. Previously sent I PDUs that are unacknowledged when this command is executed shall remain unacknowledged.

5.3.6.2.3.3 Reset (RSET) command. The RSET command PDU shall be used by a station in an operational mode to reset the V(R) in the addressed station. No information field shall be permitted with the RSET command PDU. The addressed station shall confirm acceptance of the RSET command by transmitting a UA response PDU at the earliest opportunity. Upon acceptance of this command, the V(R) of the addressed station shall be set to 0. If the UA response PDU is received correctly, the initializing station shall reset its V(S) to 0.

5.3.6.2.3.4 Unnumbered acknowledgment (UA) response. The UA response PDU shall be used by a station on a data link connection to acknowledge receipt and acceptance of the SABME, DISC, and RSET command PDUs. These received command PDUs shall not be executed until the UA response PDU is sent. No information field shall be permitted with the UA response PDU.

5.3.6.2.3.5 Disconnect mode (DM) response. The DM response PDU shall be used to report status indicating that the station is logically disconnected from the data link connection and is in asynchronous disconnected mode (ADM). No information field shall be permitted with the DM response PDU.

Downloaded from http://www.everyspec.com

5.3.6.2.3.6 Frame reject (FRMR) response. The FRMR response PDU shall be used by the station in the ABM to report that one of the following conditions, which is not correctable by resending the identical PDU, resulted from the receipt of a PDU from the remote station:

a. The receipt of a command PDU or a response PDU that is invalid or not implemented. Below are three examples of invalid PDUs:

   (1) the receipt of an S or U PDU with an information field that is not permitted,
   (2) the receipt of an unsolicited F-bit set to 1, and
   (3) the receipt of an unexpected UA response PDU.

b. The receipt of an I PDU with an information field that exceeded the established maximum information field length that can be accommodated by the receiving station for that data link connection.

c. The receipt of an invalid N(R) from the remote station. An invalid N(R) shall be defined as one that signifies an I PDU that has previously been sent and acknowledged, or one that signifies an I PDU that has not been sent and is not the next sequential I PDU waiting to be sent.

d. The receipt of an invalid N(S) from the remote station. An invalid N(S) shall be defined as an N(S) that is greater than or equal to the last sent N(R)+ k, where k is the maximum number of outstanding I PDUs. The parameter k is the window size indicated in the XNP message (see Appendix E).

The responding station shall send the FRMR response PDU at the earliest opportunity. An information field shall be returned with the FRMR response PDU to provide the reason for the PDU rejection. The information field shall contain the fields shown in Figure 19. The station receiving the FRMR response PDU shall be responsible for initiating the appropriate mode setting or resetting corrective action by initializing one or both directions of transmission on the data link connection, using the SABME, RSET or DISC command PDUs, as applicable.

Downloaded from http://www.everyspec.com

FIRST CONTROL BIT DELIVERED TO/RECEIVED FROM THE PHYSICAL LAYER LSB MSB						
1----------16	17	18--24	25	26--32	33--36	37--40
REJECTED PDU CONTROL FIELD	0	V(S)	C/R	V(R)	WXYZ	V000

FIGURE 19. FRMR information field format.

Notes to Figure 19:

a) Rejected PDU control field shall be the control field of the received PDU that caused the FRMR exception condition on the data link connection. When the rejected PDU is a U PDU, the control field of the rejected PDU shall be positioned in bit positions 1-8, with 9-16 set to 0.

b) V(S) shall be the current send-state variable value for this data link connection at the rejecting station (bit 18 = low-order bit).

c) C/R set to 1 shall indicate that the PDU causing the FRMR was a response PDU, and C/R set to 0 shall indicate that the PDU causing the FRMR was a command PDU.

d) V(R) shall be the current receive-state variable value for this data link connection at the rejecting station (bit 26 = low-order bit).

e) W set to 1 shall indicate that the control field received and returned in bits 1 through 16 was invalid or not implemented. Examples of invalid PDU are defined as:

(1) the receipt of an S or U PDU with an information field that is not permitted,
(2) the receipt of an unsolicited F-bit set to 1, and
(3) the receipt of an unexpected UA response PDU.

f) X set to 1 shall indicate that the control field received and returned in bits 1 through 16 was considered invalid because the PDU contained an information field that is not permitted with this command or response. Bit W shall be set to 1 in conjunction with this bit.

g) Y set to 1 shall indicate that the information field received exceeded the established maximum information field length which can be accommodated by the rejecting station on that data link connection.

Downloaded from http://www.everyspec.com

h) Z set to 1 shall indicate that the control field received and returned in bits 1 through 16 contained an invalid N(R).

i) V set to 1 shall indicate that the control field received and returned in bits 1 through 16 contained an invalid N(S). Bit W shall be set to 1 in conjunction with this bit.

5.3.6.3 Type 4 operation commands and responses. The Type 4 commands and responses consist of U and S PDUs.

5.3.6.3.1 Unnumbered information transfer format command. The function of the Type 4 DIA commands shall be to transfer PDUs that contain an identification number and an information field across a connectionless link. The encoding of the PDU control field for Type 4 operation shall be as listed in Figure 20.

FIRST CONTROL BIT DELIVERED TO/RECEIVED FROM THE PHYSICAL LAYER LSB MSB		
PDU Identifier	L-bits	PDU Identification No.
1 2 3 4 5 6	7 8	9 10 11 12 13 14 15 16
1 1 0 1 0 1	L L	<---ID Number--->

FIGURE 20. Type 4 DIA PDU control field bit assignments.

5.3.6.3.1.1 DIA PDU acknowledgment. Transmitted DIA PDUs are acknowledged by a Type 4 DRR response S PDU with the same precedence from the receiving stations, except for the following cases:

a. The receiving station is a global or group multicast addressee only.

b. The receiving station's link address is not in the destination address field.

c. The response mode parameter is set to no.

5.3.6.3.2 Supervisory format (S) commands and responses. The S PDUs shall be used to convey link acknowledgment of a DIA PDU and whether or not a station is ready to receive Type 4 PDUs. The S PDU has a single destination address. For the command DRR and DRNR S PDUs the destination address is the global address and does not acknowledge DIA PDUs. These S PDUs are used to indicate

Downloaded from http://www.everyspec.com

Type 4 receive status. The response DRR S PDU contains a single destination address, that of the originator of the DIA PDU being acknowledged. The command S PDU level of precedence shall be set to the highest precedence while response S PDUs shall use the precedence of the DIA PDU which they are acknowledging. The encoding of the S PDU control field for Type 4 operation shall be as listed in Figure 21.

5.3.7 Description of procedures by type. The procedures for each operation type are described in 5.3.7.1, 5.3.7.2 and 5.3.7.3 (and their subparagraphs). The three types of procedures can coexist on the same network.

5.3.7.1 Description of type 1 procedures. The procedures associated with Type 1 operation are described in 5.3.7.1 and all subparagraphs.

5.3.7.1.1 Modes of operation. In Type 1 operation, no modes of operation are defined. A station using Type 1 procedures shall support the entire procedure set whenever it is operational on the network.

FIRST CONTROL BIT DELIVERED TO/RECEIVED FROM THE PHYSICAL LAYER – LSB MSB		
PDU Identifier	L-bits	PDU Identification No.
1 2 3 4 5 6	7 8	9 10 11 12 13 14 15 16
1 0 0 0 1 0	0 0	0 0 0 0 0 0 0 0 DRR Command
1 0 0 0 1 0	L L	<---ID Number---> DRR Response
1 0 1 0 1 0	0 0	0 0 0 0 0 0 0 0 DRNR Command
1 0 1 0 1 0	L L	<---ID Number---> DRNR Response

FIGURE 21. Type 4 S PDU control field bit assignments.

Downloaded from http://www.everyspec.com

5.3.7.1.2 Procedure for addressing. The address fields shall be used to indicate the source and destinations of the transmitted PDU. The first bit in the source address field shall be used to identify whether a command or a response is contained in the PDU. Individual, group, special, and global addressing shall be supported for destination addresses in command PDUs. The source address field shall contain an individual or special address.

5.3.7.1.3 Procedure for using the P/F bit. The station receiving a UI or TEST command PDU with the P-bit set to 1 shall send an appropriate response PDU with the F-bit set to 1.

5.3.7.1.4 Procedures for logical data link set-up and disconnection. Type 1 operation does not require any prior data link connection establishment (set-up), and hence no data link disconnection. Once the service access point has been enabled within the station, information may be sent to, or received from, a remote station also participating in Type 1 operation.

5.3.7.1.5 Procedures for information transfer.

5.3.7.1.5.1 Sending UI command PDUs. Information transfer from an initiating station to a responding station shall be accomplished by sending the UI command PDU. When a sending station sends a UI command PDU with the P-bit set to 1, it shall start an acknowledgment timer for that transmission and initialize the internal transmission count variable to zero. If all expected URR or URNR response PDUs are not received before the timer runs out, the sending station shall resend the UI command PDU, increment the internal transmission count variable, and restart the acknowledgment timer. Prior to resending the UI command PDU, the group and global addresses shall be removed as well as individual and special addresses from which a response (URR or URNR) was received. The special address 3, if used, shall not be removed prior to retransmission unless it is the only address remaining. No retransmission shall be attempted unless an individual or special address other than 3 remains. If a URR response PDU is still not received, this resending procedure shall be repeated until the value of the internal transmission count variable is equal to the value of the logical link parameter N4, as described in 5.3.8.1.1.c, at which time a DL-Status-Indication shall be reported to the upper layer indicating an acknowledgment failure. An internal transmission count shall be maintained for each UI information exchange (where P-bit = 1) between a pair of sending and receiving stations. Both the acknowledgment timer and the internal transmission count, for that exchange, shall not affect the information exchange with other receiving stations. If a URNR response PDU is received in response to a UI command with the P-bit set to 1, the receiving station shall designate the sending station as busy. The retransmission of the UI command shall follow the rules for the busy condition. Transmission of UI commands to that station shall be discontinued until the busy state is cleared. UI PDUs that have the P-bit set to 0 are not acknowledged nor retransmitted.

5.3.7.1.5.2 Receiving UI command PDUs. Reception of the UI command PDU with P-bit set to 0 shall not be acknowledged. A station shall acknowledge the receipt of a valid UI command PDU, which has

Downloaded from http://www.everyspec.com

the P-bit set to 1 and contains the station individual address, by sending a URR response PDU to the originator of the command UI PDU. If the receiving station is unable to accept UI PDUs due to a busy condition, it may respond with a URNR response PDU.

5.3.7.1.5.3 Sending URR response PDUs. A URR response PDU, with the F-bit set to 1, shall be sent only upon receipt of a UI command PDU, with the P-bit set to 1. The URR response PDU shall be sent to the originator of the associated UI command PDU.

5.3.7.1.5.4 Sending URNR response PDUs. A URNR response PDU, with the F-bit set to 1, may be sent by the remote station to advise the originator of the associated UI command PDU that it is experiencing a busy condition and is unable to accept UI PDUs.

5.3.7.1.5.5 Receiving UI acknowledgment. After sending a UI command PDU with the P-bit set to 1, the sending station shall expect to receive an acknowledgment in the form of a URR response PDU from the station to which the command PDU was sent. No acknowledgment shall be expected from group or global addresses or from the special address 3. Upon receiving such a response PDU, the station shall stop the acknowledgment timer associated with the transmission for which the acknowledgment was received and reset the associated internal transmission count to zero. If the response was a URNR response PDU, the sending station will stop sending UI, I, and DIA PDUs to that remote station until a URR command PDU is received or the busy-state timer expires, indicating termination of the busy condition. If High Reliability was requested for the command PDU, a DL-Status.Indication should be sent to the upper layer indicating acknowledgment success.

5.3.7.1.5.6 Sending URNR command PDUs. A URNR command PDU, with the P-bit set to 0, may be sent at any time to indicate a busy condition.

5.3.7.1.5.7 Receiving URNR command PDUs. Receipt of the URNR indicates that the sending station is busy and, with one exception described below, no additional I, UI or DIA PDUs should be sent until the sending station regains its ability to receive messages. The URNR command PDU does not contain any acknowledgment information.

Exception: A Station may include a busy destination in a PDU that is addressed to multiple destination addresses if at least one of the multiple destinations is not busy.

5.3.7.1.5.8 Sending URR command PDUs. A URR command PDU, with the P-bit set to 0, may be sent by a station at any time to indicate the regaining of its ability to receive messages.

5.3.7.1.5.9 Receiving URR command PDUs. The receipt of the URR command PDU cancels the prior receipt of a URNR and indicates that the sending station is now operational.

Downloaded from http://www.everyspec.com

5.3.7.1.5.10 Using TEST command and response PDUs. The TEST function provides a facility to conduct loop-back tests of the station-to-station transmission path. The TEST function may be initiated within the data link layer by any authorized station within the data link layer. Successful completion of a test started by sending a TEST command PDU with the P-bit set consists of receiving a TEST response PDU with the F-bit set and containing no data from each individual addressee. Successful completion of a test started by sending a TEST command PDU without the P-bit set consists of receiving a TEST response PDU without the F-bit set and containing the identical data from each individual, group or global addressee. The length of the information field is variable from 0 to 128 octets. Any TEST command PDU received in error shall be discarded and no response PDU sent. In the event of a test failure, it shall be the responsibility of the TEST function initiator to determine any future actions.

5.3.7.2 Description of type 2 procedures. The procedures associated with Type 2 operation are described in 5.3.7.2.1 through 5.3.7.2.8.

5.3.7.2.1 Modes of operation. Two modes of operation are defined for Type 2 operation: an operational mode and a non-operational mode.

5.3.7.2.1.1 Operational mode. The operational mode shall be the ABM. ABM is a balanced operational mode in which a data link connection has been established between two stations. Either station shall be able to send commands at any time and initiate response transmissions without receiving explicit permission from the other station. Such an asynchronous transmission shall contain one or more PDUs that shall be used for information transfer and to indicate status changes in the station (for example, the number of the next expected I PDU; transition from a ready to a busy condition, or vice versa; occurrence of an exception condition). A station in ABM receiving a DISC command PDU shall respond with the UA response PDU if it is capable of executing the command. ABM consists of a data link connection phase, an information transfer phase, a data link resetting phase, and a data link disconnection phase.

5.3.7.2.1.2 Non-operational mode. The non-operational mode shall be the ADM. ADM differs from ABM in that the data link connection is logically disconnected from the physical medium such that no information (user data) shall be sent or accepted. ADM is defined to prevent a data link connection from appearing on the physical medium in a fully operational mode during unusual situations or exception conditions. Such operation could cause a sequence number mismatch between stations or a station's uncertainty of the status of the other station. A data link connection shall be system-predefined as to the conditions that cause it to assume ADM. Below are three examples of possible conditions, in addition to receiving a DISC command PDU, that may cause a data link connection to enter ADM:

a. the power is turned on,

b. the data link layer logic is manually reset, or

Downloaded from http://www.everyspec.com

c. the data link connection is manually switched from a local (home) condition to the connected-on-the-data-link (on-line) condition.

A station on a data link connection in ADM shall be required to monitor transmissions received from its PL to accept and respond to one of the mode-setting command PDUs (SABME, DISC), or to send a DM response PDU at a medium access opportunity, when required. In addition, since the station has the ability to send command PDUs at any time, the station may send an appropriate mode-setting command PDU. A station in ADM receiving a DISC command PDU or any I or S PDU shall respond with the DM response PDU. A station in ADM shall not establish a FRMR exception condition. ADM consists of a data link disconnected phase.

5.3.7.2.2 Procedure for addressing. The address fields for a PDU shall be used to indicate the individual source and up to 16 destinations. The first bit in the source address field shall be used to identify whether a command or response is contained in the PDU. A single data link connection can be established between any two stations on the network.

5.3.7.2.3 Procedures for using the P/F bit. An individually addressed station receiving a command PDU (SABME, DISC, RR, RNR, REJ, or I) with the P-bit set to 1 shall send a response PDU with the F-bit set to 1. The response PDU returned by a station to a RSET, SABME or DISC command PDU with the P-bit set to 1 shall be a UA or DM response PDU with the F-bit set to 1. The response PDU returned by a station to an I, RR, or REJ command PDU with the P-bit set to 1 shall be an I, RR, REJ, RNR, DM, or FRMR response PDU with the F-bit set to 1. The response PDU returned by a station to an RNR command PDU with the P-bit set to 1 shall be an RR, REJ, RNR, DM, or FRMR response PDU with the F-bit set to 1. The response PDU returned by a station to a SREJ with the P-bit set to one shall be the requested I PDU (response) with the F-bit set to one.

NOTE: The P-bit is usable by the station in conjunction with the timer recovery condition. (See 5.3.7.2.5.11)

5.3.7.2.4 Procedures for logical data link set-up and disconnection.

5.3.7.2.4.1 Data link connection phase. Either station shall be able to take the initiative to initialize the data link connection.

5.3.7.2.4.1.1 Initiator action. When the station wishes to initialize the link, it shall send the SABME command PDU to one or more individual addresses and start the acknowledgment timer(s). Upon receipt of the UA response PDU, the station shall reset both the V(S) and V(R) to 0 for the corresponding data link connection, shall stop the acknowledgment timer and shall enter the information transfer phase. When receiving the DM response PDU, the station that originated the SABME

Downloaded from http://www.everyspec.com

command PDU shall stop the acknowledgment timers for that link, shall not enter the information transfer phase for that station, and shall report to the higher layer for appropriate action. Should any acknowledgment timer run out before receiving all UA or DM response PDUs, the station shall resend the SABME command PDU, after deleting the address and control fields corresponding to the received UAs or DMs, and restart the acknowledgment timers. After resending the SABME command PDU N2 times, the station shall stop sending the SABME command PDU, may report to the higher layer protocol and may initiate other error recovery action. The value of N2 is defined in 5.3.8.1.2.d. Other Type 2 PDUs received (commands and responses) while attempting to connect shall be ignored by the station.

5.3.7.2.4.1.2 Respondent action. When a SABME command PDU is received, and the connection is desired, the station shall return a UA response PDU to the remote station, set both the V(S) and V(R) to 0 for the corresponding data link connection, and enter the information transfer phase. The return of the UA response PDU shall take precedence over any other response PDU that may be pending at the station for that data link connection. It shall be possible to follow the UA response PDU with additional PDUs, if pending. If the connection is not desired, the station shall return a DM response PDU to the remote station and remain in the link disconnected mode. For a description of the actions to be followed upon receipt of a SABME or DISC command PDU, see 5.3.7.2.4.4.

5.3.7.2.4.2 Information transfer phase. After having sent the UA response PDU to an SABME command PDU or having received the UA response PDU to a sent SABME command PDU, the station shall accept and send I and S PDUs according to the procedures described in 5.3.7.2.5. Any time a station has established a connection and enters the information transfer phase, it should also send a DL-Status Indication to its local upper layer indicating a Type 2 connection has been established. When receiving an SABME command PDU while in the information transfer phase, the station shall conform to the resetting procedure described in 5.3.7.2.6. When receiving an RSET command PDU while in the information transfer phase, the station shall conform to the resetting procedure described in 5.3.7.2.7.

5.3.7.2.4.3 Data link disconnection phase. During the information transfer phase, either station shall be able to initiate disconnecting of the data link connection by sending a DISC command PDU and starting the acknowledgment timer (see 5.3.8.1.2.a). When receiving a DISC command PDU, the station shall return a UA response PDU and enter the data link disconnected phase. The return of the UA response PDU shall take precedence over any other response PDU that may be pending at the station for that data link connection. Upon receipt of the UA or DM response PDU from a remote station, the station shall stop its acknowledgment timer for that link, and enter the link disconnected mode. Should the acknowledgment timer run out before receiving the UA or DM response PDU for a particular link, the station shall send another DISC command PDU and restart the acknowledgment timer. After sending the DISC command PDU N2 times, the sending station shall stop sending the DISC command PDU, shall enter the data link disconnected phase, and shall report to the higher layer for the appropriate error recovery action. The value of N2 is defined in 5.3.8.1.2.d.

Downloaded from http://www.everyspec.com

5.3.7.2.4.4 Data link disconnected phase. After having received a DISC command PDU from the remote station and returned a UA response PDU, or having received the UA response PDU to a sent DISC command PDU, the station shall enter the data link disconnected phase. In the disconnected phase, the station shall react to the receipt of an SABME command PDU, as described in 5.3.7.2.4.1, and shall send a DM response PDU in answer to a received DISC command PDU. When receiving any other Type 2 command, I or S PDU, the station in the disconnected phase shall send a DM response PDU. In the disconnected phase, the station shall be able to initiate a data link connection. Any time a station enters the disconnected phase, it should send a DL-Status Indication to its local upper layer indicating a Type 2 connection has been disconnected.

5.3.7.2.4.5 Contention of unnumbered mode-setting command PDUs. A contention situation on a data link connection shall be resolved in the following way: If the sent and received mode- setting command PDUs are the same, each station shall send the UA response PDU at the earliest opportunity. Each station shall enter the indicated phase either after receiving the UA response PDU, or after its acknowledgment timer expires. If the sent and received mode-setting command PDUs are different, each station shall enter the data link disconnected phase and shall issue a DM response PDU at the earliest opportunity.

5.3.7.2.5 Procedures for information transfer. The procedures that apply to the transfer of I PDUs in each direction on a data link connection during the information transfer phase are described in 5.3 7.2.5.1 through 5.3.7.2.5.11. When used, the term number one higher is in reference to a continuously repeated sequence series, that is, 127 is 1 higher than 126, and 0 is 1 higher than 127 for the modulo-128 series.

5.3.7.2.5.1 Sending I PDUs. When the station has an I PDU to send (that is, an I PDU not already sent), it shall send the I PDU with an N(S) equal to its current V(S) and an N(R) equal to its current V(R) for that data link connection. At the end of sending the I PDU, the station shall increment its V(S) by 1. If the acknowledgment timer is not running at the time that an I PDU is sent, the acknowledgment timer shall be started. If the data link connection V(S) is equal to the last value of N(R) received plus *k* (where *k* is the maximum number of outstanding I PDUs; see 5.3.8.1.2.e), the station shall not send any new I PDUs on that data link connection, but shall be able to resend an I PDU as described in 5.3.7.2.5.6 or 5.3.7.2.5.9. Upon sending an I PDU that causes the number of outstanding I PDUs to be equal to the *k2* value for that connection, the station shall send an RR (or RNR) command to the destination station. The destination station shall respond with a RR Response with the N(R) indicating the last received I PDU. When a local station on a data link connection is in the busy condition, the station shall still be able to send I PDUs, provided that the remote station on this data link connection is not also busy. When the station is in the FRMR exception condition for a particular data link connection, it shall stop transmitting I PDUs on that data link connection. When a station is in the timer recovery condition, it shall not send any new I PDUs on that data link connection as per 5.3.7.2.5.11.

Downloaded from http://www.everyspec.com

5.3.7.2.5.2 Receiving I PDUs. When the station is not in a busy condition and receives an I PDU whose N(S) is equal to its V(R), the station shall accept the information field of this PDU, increment by 1 its V(R), and act as follows:

a) If an I PDU is available to be sent, the station shall be able to act as in 5.3.7.2.5.1 and acknowledge the received I PDU by setting N(R) in the control field of the next sent I PDU to the value of its V(R). The station shall also be able to acknowledge the received I PDU by sending an RR PDU with the N(R) equal to the value of its V(R).

b) If no I PDU is available to be sent by the station, then the station shall either:

(1) If the received I PDU is a command PDU with the P-bit set to 1, then send an S PDU with its F-bit set to 1 and its N(R) equal to the current value of V(R) at the first possible opportunity (this transmission is time critical to maintaining the connection), and stop the Response Delay Timer; or

(2) If the received I PDU is not a command PDU with the P-bit set to 1, then the station shall:

(a) if the number of outstanding I PDUs received since the last I PDU for which an acknowledgment was sent is equal to or greater than *k3*, then send an S PDU with its N(R) equal to the current value of V(R) at the earliest opportunity, and stop the Response Delay Timer; else

(b) if the number of outstanding I PDUs received since the last I PDU for which an acknowledgment was sent is less than *k3*, and if the Response Delay Timer is not already running, then start the Response Delay Timer. When the Response Delay Timer is running then the station shall:

(i) if an I PDU is sent back to the originator of the recently received I PDU before the Response Delay Timer expires, then stop the Response Delay Timer. The N(R) in the outgoing I frame will acknowledge any recently received correct in sequence I PDU frames as described in 5.3.7.2.5.1 (No S PDU needs to be sent); else

(ii) if another PDU of any type that can be concatenated is transmitted to any destination and adequate space exists to concatenate additional frames, then concatenate onto this PDU an S PDU with its N(R) equal to the current value of V(R)

Downloaded from http://www.everyspec.com

addressed to the originator of the recently received I PDU, and stop the Response Delay Timer; else

(iii) if the Response Delay Timer expires, then at the earliest opportunity, send an S PDU with its N(R) equal to the current value of V(R). (Note that S PDUs to other destinations may be concatenated with this frame as described in the preceding paragraph.)

c) If receipt of the I PDU caused the station to go into the busy condition with regard to any subsequent I PDUs, the station shall send an RNR PDU with the N(R) equal to the value of its V(R). If I PDUs are available to send, the station shall be able to send them (as in 5.3.7.2.5.1) prior to or following the sending of the RNR PDU.

When the station is in a busy condition, the station shall be able to ignore the information field contained in any received I PDU on that data link connection (See 5.3.7.2.5.10.).

5.3.7.2.5.3 Receiving incorrect PDUs. When the station receives an invalid PDU or a PDU with an incorrect source address, the entire PDU shall be discarded. If an incorrect destination address is received, disregard that address field and continue processing the PDU.

5.3.7.2.5.4 Receiving out-of-sequence PDUs. When the station receives one or more I PDUs whose N(S)s are not in the expected sequence, that is, not equal to the current V(R) but is within the receive window, the station shall respond by sending a REJ or a SREJ PDU as described in either 5.3.7.2.5.4.1 or 5.3.7.2.5.4.2. Use of the SREJ is the preferred method of indicating missing frames since it allows the receiving station to request the retransmission of only those frames that are actually missing. Use of REJ to indicate missing frames results in the unnecessary retransmission of frames that were received correctly since the procedure requires that frames received out of sequence be discarded until the missing frame is received. Use of REJ to indicate missing frames is intended for use by an implementation in the case that it is providing ordered delivery of I PDUs to the next layer and adequate storage is not available (on a static or dynamic basis) within the implementation to retain out-of-sequence frames until the missing frames are received.

5.3.7.2.5.4.1 Reject (REJ) response. When an I PDU has been received out-of-sequence and more than one frame is missing, the station may discard the information field of the I PDU and send a REJ PDU with the N(R) set to the value of V(R). The station shall then discard the information field of all I PDUs until the expected I PDU is correctly received. When receiving the expected I PDU, the station shall acknowledge the PDU, as described in 5.3.7.2.5.2. The station shall use the N(R) and P-bit indications in the discarded I PDU. On a given data link connection, only one “sent REJ” exception condition from a given station to another given station shall be established at a time. A REJ and SREJ

Downloaded from http://www.everyspec.com

exception condition cannot be active at the same time. A "sent REJ" condition shall be cleared when the requested I PDU is received. The "sent REJ" condition shall be able to be reset when a REJ timer time-out function runs out. When the station perceives by REJ timer time-out that the requested I PDU will not be received, because either the requested I PDU or the REJ PDU was in error or lost, the station shall be able to resend the REJ PDU up to N2 times to reestablish the "sent REJ" condition. The value of N2 is defined in 5.3.8.1.2.d.

5.3.7.2.5.4.2 Selective reject (SREJ) response. When an I PDU has been received and at least one frame is missing, the station may retain the information field of the out-of-sequence I PDUs and send SREJ PDUs for the missing I PDUs. A station may transmit one or more SREJ PDUs, each containing a different N(R) with the P-bit set to 0. However, a SREJ PDU shall not be transmitted if an earlier REJ condition has not been cleared. When the station perceives by the REJ timer time-out that the requested I PDU will not be received, because either the requested I PDU or the SREJ PDU was in error or lost, the station shall be able to resend all outstanding SREJ PDUs in order to reestablish the "sent SREJ" condition up to N2 times.

5.3.7.2.5.5 Receiving acknowledgment. When correctly receiving an I or S PDU, even in the busy condition (see 5.3.7.2.5.10), the receiving station shall consider the N(R) contained in this PDU as an acknowledgment for all the I PDUs it has sent on this data link connection with an N(S) up to and including the received N(R) minus one. The station shall reset the acknowledgment timer when it correctly receives an I or Type 2 S PDU with the N(R) higher than the last received N(R) (actually acknowledging some I PDUs). If High Reliability was requested for any of the acknowledged PDU(s), a DL-Status.Indication should be sent to the upper layer indicating acknowledgment success for those PDUs. If the timer has been reset and there are outstanding I PDUs still unacknowledged on this data link connection, the station shall restart the acknowledgment timer. If the timer then runs out, the station shall follow the procedures in 5.3.7.2.5.11 with respect to the unacknowledged I PDUs.

5.3.7.2.5.6 Receiving SREJ PDU. If the received transmission is an SREJ command or response PDU, the I PDU corresponding to the N(R) being rejected shall be retransmitted.

5.3.7.2.5.7 Receiving RSET PDU. Upon receipt of the RSET command PDU, the receiving station shall reply with a UA response PDU and shall then set its V(R) to 0 for the initiating station.

5.3.7.2.5.8 Receiving REJ PDU. When receiving an REJ PDU, the station shall set its V(S) to the N(R) received in the REJ PDU control field. The station shall resend the corresponding I PDU as soon as it is available. If other unacknowledged I PDUs had already been sent on that data link connection following the one indicated in the REJ PDU, then those I PDUs shall be resent by the station following the resending of the requested I PDU. If retransmission beginning with a particular PDU occurs while waiting acknowledgment (see 5.3.7.2.5.11) and an REJ PDU is received, which would also start

Downloaded from http://www.everyspec.com

retransmission with the same I PDU [as identified by the N(R) in the REJ PDU], the retransmission resulting from the REJ PDU shall be inhibited.

5.3.7.2.5.9 Receiving RNR PDU. A station receiving an RNR PDU shall, with one exception described below, stop sending I PDUs on the indicated data link connection at the earliest possible time and shall start the busy-state timer, if not already running. When the busy-state timer runs out, the station shall follow the procedure described in 5.3.7.2.5.11. In any case, the station shall not send any other I PDUs on that data link connection before receiving an RR or REJ PDU, or before receiving an I response PDU with the F-bit set to 1, or before the completion of a resetting procedure on that data link connection.

Exception: A Station may include a busy destination in a PDU that is addressed to multiple destination addresses if at least one of the multiple destinations is not busy.

5.3.7.2.5.10 Station-busy condition. A station shall enter the busy condition on a data link connection when it is temporarily unable to receive or continue to receive I PDUs due to internal constraints; for example, receive buffering limitations. When the station enters the busy condition, it shall send an RNR PDU at the first possible opportunity. It shall be possible to send I PDUs waiting to be sent on that data link connection prior to or following the sending of the RNR PDU. The station may send a URNR command PDU to the global address after the RNR PDU. While in the busy condition, the station shall accept and process supervisory PDUs and return an RNR response PDU with the F-bit set to 1 if it receives an S or I command PDU with the P-bit set to 1 on the affected data link connection. To indicate the clearance of a busy condition on a data link connection, the station shall send an I response PDU with the F-bit set to 1 if a P-bit set to 1 is outstanding, an REJ response PDU, or an RR response PDU on the data link connection with N(R) set to the current V(R), depending on whether or not the station discarded information fields of correctly received I PDUs. The station may then send a URR command PDU to the global address. Additionally, the sending of a SABME command PDU or a UA response PDU shall indicate the clearance of a busy condition at the sending station on a data link connection.

5.3.7.2.5.11 Waiting acknowledgment. The station maintains an internal retransmission count variable for each data link connection, which shall be set to 0 when the station receives or sends a UA response PDU to a SABME command PDU, when the station receives an RNR PDU, or when the station correctly receives an I or S PDU with the N(R) higher than the last received N(R) (actually acknowledging some outstanding I PDUs). If the acknowledgment timer, busy-state timer, or the P-bit timer runs out, the station on this data link connection shall enter the timer recovery condition and add 1 to its retransmission count variable. When a station is in the timer recovery condition, the station shall not send any new I PDUs to the destination station. The station shall then start the P-bit timer and send an S command PDU with the P-bit set to 1. The timer recovery condition shall be cleared on the data link

Downloaded from http://www.everyspec.com

connection when the station receives a valid I or S PDU from the remote station with the F-bit set to 1. If, while in the timer recovery condition, the station correctly receives a valid I or S PDU with:

a. the F-bit set to 1 and the N(R) within the range from the last value of N(R) received to the current V(S) inclusive, the station shall clear the timer recovery condition, set its V(S) to the received N(R), stop the P-bit timer, and resend any unacknowledged PDUs; or

b. the P/F bit set to 0 and the N(R) within the range from the last value of N(R) received to the current V(S) inclusive, the station shall not clear the timer recovery condition but shall treat the N(R) value received as an acknowledgment for the indicated previously transmitted I PDUs. (See 5.3.7.2.5.5.)

If the P-bit timer runs out in the timer recovery condition, the station shall add 1 to its retransmission count variable. If the retransmission count variable is less than N2, the station shall resend an S PDU with the P-bit set to 1 and restart its P-bit timer. If the retransmission count variable is equal to N2, the station shall initiate a resetting procedure, by sending a SABME command PDU, as described in 5.3.7.2.6. N2 is a system parameter defined in 5.3.8.1.2.d.

5.3.7.2.6 Procedures for mode resetting. The resetting phase is used to initialize both directions of information transfer according to the procedure described in 5.3.7.2.6.1 through 5.3.7.2.6.3. The resetting phase shall apply only during ABM. Either station shall be able to initiate a resetting of both directions by sending a SABME command PDU and starting its acknowledgment timer. Any time a station resets its connection with a remote station, it should also send a DL-Status Indication to its local upper layer indicating a Type 2 connection has been reset.

5.3.7.2.6.1 Receiver action. After receiving a SABME command PDU, the station shall return one of two types of responses, at the earliest opportunity:

a. a UA response PDU and reset its V(S) and V(R) to 0 to reset the data link connection, or

b. a DM response PDU if the data link connection is to be terminated.

The return of the UA or DM response PDU shall take precedence over any other response PDU for that data link connection that may be pending at the station. It shall be possible to follow the UA PDU with additional PDUs, if pending.

5.3.7.2.6.2 Initiator action. If the UA PDU is received correctly by the initiating station, it shall reset its V(S) and V(R) to 0 and stop its acknowledgment timer. This shall also clear all exception conditions that might be present at either of the stations involved in the reset. The exchange shall also indicate

Downloaded from http://www.everyspec.com

clearance of any busy condition that may have been present at either station involved in the reset. If a DM response PDU is received, the station shall enter the data link disconnected phase, shall stop its acknowledgment timer, and shall report to the higher layer for appropriate action. If the acknowledgment timer runs out before a UA or DM response PDU is received, the SABME command PDU shall be resent and the acknowledgment timer shall be started. After the timer runs out N2 times, the sending station shall stop sending the SABME command PDU, and shall enter the ADM, may report to the higher layer protocol and may initiate other error recovery actions. The value of N2 is defined in 5.3.8.1.2.d. Other Type 2 PDUs, with the exception of the SABME and DISC command PDUs, received by the station before completion of the reset procedure shall be discarded.

5.3.7.2.6.3 Resetting with the FRMR PDU. Under certain FRMR exception conditions (listed in 5.3.7.2.8), it shall be possible for the initiating station, by sending an FRMR response PDU, to ask the remote station to reset the data link connection. Upon receiving the FRMR response PDU (even during a FRMR exception condition), the remote station shall either initiate a resetting procedure, by sending a SABME or RSET command PDU, or initiate a disconnect procedure, by sending a DISC command PDU. After sending an FRMR response PDU, the initiating station shall enter the FRMR exception condition. The FRMR exception condition shall be cleared when the station receives or sends a SABME or DISC command PDU, DM response PDU or RSET command PDU. Any other Type 2 command PDU received while in the FRMR exception condition shall cause the station to resend the FRMR response PDU with the same information field as originally sent. In the FRMR exception condition, additional I PDUs shall not be sent, and received I and S PDUs shall be discarded by the station. It shall be possible for the station to start its acknowledgment timer on the sending of the FRMR response PDU. If the timer runs out before the reception of a SABME or DISC command PDU from the remote station, it shall be possible for the station to resend the FRMR response PDU and restart its acknowledgment timer. After the acknowledgment timer has run out N2 times, the station shall reset the data link connection by sending a SABME command PDU. The value of N2 is defined in 5.3.8.1.2.d. When an additional FRMR response PDU is sent while the acknowledgment timer is running, the timer shall not be reset or restarted.

5.3.7.2.7 Procedures for sequence number resetting. This resetting procedure, employing the RSET command, is used to reinitialize the V(R) in the addressed station and the V(S) in the local station. The addressed station shall confirm acceptance of the RSET command by transmission of a UA response at the earliest opportunity. Upon acceptance of this command, the addressed station V(R) shall be set to 0. If the UA response is received correctly, the initializing station shall reset its V(S) to 0. The RSET command shall reset all PDU rejection conditions in the addressed station, except for an invalid N(R) sequence number condition which the addressed station has reported by a FRMR. The RSET command may be sent by the station that detects an invalid N(R) to clear such a frame rejection condition in place of sending a FRMR frame. To clear an invalid N(R) frame rejection condition with an RSET command, the RSET command shall be transmitted by the station that detects the invalid N(R). A station may resend the contents of the information field of unacknowledged outstanding I PDUs. Any

Downloaded from http://www.everyspec.com

time a station resets its connection with a remote station, it should also send a DL-Status Indication to its local upper layer indicating a Type 2 connection has been reset.

5.3.7.2.8 FRMR exception conditions. The station shall request a resetting procedure by sending an FRMR response PDU, as described in 5.3.7.2.6.3, after receiving, during the information transfer phase, a PDU with one of the conditions identified in 5.3.6.2.3.6. The coding of the information field of the FRMR response PDU that is sent is given in 5.3.6.2.3.6. The other station shall initiate a resetting procedure by sending a SABME or RSET command PDU, as described in 5.3.7.2.6, after receiving the FRMR response PDU.

5.3.7.3 Description of type 4 procedures. The procedures associated with Type 4 operation are described in 5.3.7.3.1 through 5.3.7.3.5.3.

5.3.7.3.1 Modes of operation. In Type 4 operation, no modes of operation are defined. A station using Type 4 procedures shall support the entire set whenever it is operational on the network.

5.3.7.3.2 Procedure for addressing. The address field shall be used to indicate the source and destinations of the transmitted PDU. The first bit in the source address shall be used to identify whether a command or a response is contained in the PDU. Individual, group, and global addressing shall be supported for the destination addresses in command PDUs. The source address shall contain an individual address.

5.3.7.3.3 Procedure for using the P/F bit. The P/F bit is not implemented in Type 4 operation.

5.3.7.3.4 Procedures for logical data link set-up and disconnection. Type 4 operation does not require any prior data link set-up and disconnection. Data link set-up and disconnection procedures are not required for Type 4 operation. All stations shall advance to the information transfer state.

5.3.7.3.5 Procedures for information transfer.

5.3.7.3.5.1 Sending DIA command frames. The DIA PDU may either be a new PDU from the local user, or a retransmission of a DIA PDU which was not acknowledged within the period determined by the T1 parameter. DIA PDUs are retransmitted up to N2 times, where N2 is as specified by the station parameters. If a DIA PDU is not acknowledged after N2 retransmissions, an indication should be sent to the upper layer indicating an acknowledgment failure.

5.3.7.3.5.2 Decoupled receive not ready (DRNR) procedures.

5.3.7.3.5.2.1 Sending a DRNR command PDU. A station may generate and transmit a DRNR command PDU if its Quiet Mode is disabled and it receives a DIA PDU which it cannot accept because

Downloaded from http://www.everyspec.com

its receive buffers are full. A station may generate a DRNR command PDU when directed by the management function (e.g., operator). The DRNR command S PDU does not acknowledge a DIA PDU. The station may send a URNR command PDU to the global address after the DRNR PDU.

5.3.7.3.5.2.2 Receiving a DRNR command PDU. Upon receipt of a DRNR PDU a station shall, with one exception described below, inhibit transmission of DIA PDUs to the station which originated the DRNR command by updating the station status table to reflect this busy condition. The DRNR PDU shall not change the Quiet Mode status of a station. Any PDUs in the retransmission queue addressed to the busy station shall be modified to delete (null) the busy station from the destination address list. Normal transmissions of DIA PDUs to that station shall resume upon receipt of a DRR command from the station.

Exception: A Station may include a busy destination in a PDU that is addressed to multiple destination addresses if at least one of the multiple destinations is not busy.

5.3.7.3.5.2.3 Sending a DRNR response PDU. A station shall generate and transmit a DRNR response PDU after it has sent a DRNR command PDU (if its Quiet Mode is disabled) while it is processing frames in its receive queues in the busy condition. A DRNR response acknowledges the DIA PDU indicated in the PDU identification number field while reinforcing the station's busy condition.

5.3.7.3.5.2.4 Receiving a DRNR response PDU. Upon receipt of a DRNR response PDU, a station shall search the destination addresses associated with the identification number in the DRNR response PDU. The response PDU originator's address shall be deleted from the destination address field (if it is still there) of the DIA being acknowledged.

5.3.7.3.5.3 Decoupled receive ready (DRR) procedures.

5.3.7.3.5.3.1 Sending a DRR PDU. A station shall generate and transmit a DRR PDU if its Quiet Mode is disabled and one of the following conditions exist.

a. The station is no longer busy and had previously sent a DRNR command PDU.

b. The station is not busy and the station received a DIA PDU from a transmitting station which requires acknowledgment.

c. If directed by the user interface.

5.3.7.3.5.3.1.1 Sending a DRR command PDU. The DRR command PDU is generated and transmitted by a station to indicate the end of a Type 4 busy/buffer full condition. The DRR command S PDU does not acknowledge DIA PDUs. The DRR command PDU only changes the status from busy

Downloaded from http://www.everyspec.com

to receive ready. This frame does not change the Quiet Mode status. The station may send a URR command PDU to the global address after the DRR PDU.

5.3.7.3.5.3.1.2 Sending a DRR response PDU. The DRR response PDU is generated and transmitted by a station whose Quiet Mode is disabled to acknowledge the acceptance of a DIA PDU, and is addressed to the originator of the DIA PDU. The DIA PDU which is being acknowledged is indicated by the PDU identification number.

5.3.7.3.5.3.2 Receiving a DRR response PDU. Upon receipt of a DRR response PDU a station shall search the destination addresses associated with the identification number in the DRR response PDU. The DRR response PDU originator's address shall be deleted from the destination address field of the DIA being acknowledged. If High Reliability was requested for the DIA, an indication should be sent to the upper layer indicating acknowledgment success.

5.3.8 Data link initialization. The XNP messages, described in Appendix E, are used to establish and control link parameters. The Join Request message contains the link operating parameters such as net busy detect time, subscriber rank, and net access method. Initialization is caused by an operator or system request. The Join Request is sent to the default NETCON destination address, which shall be the station assigned to perform NETCON station responsibilities. The NETCON station verifies link parameters and provides values for missing or incorrect parameters to ensure that the new station will not disrupt the net. The NETCON station will reply with either a Join Reject or Join Accept PDU. If the initializing station receives a Join Reject PDU, it should not attempt any link activity until the correct parameters have been obtained.

NOTE: Link initialization may also occur without an XNP message exchange. Prearrangement by timing, voice, written plans, or orders provides the operator with the necessary frequency, link address, data rate, and other parameters to enter a net and establish a link. With the prearranged information, an operator may begin link activity on the net and initialization is assumed when the new station senses the net and transmits its first message.

5.3.8.1 List of data link parameters. This document defines a number of data link parameters for which the system-by-system range of values is determined at network establishment. The actual parameter values selected play an important role in determining the efficiency and effectiveness of the network configuration. It is therefore important to select proper values. Even more important is the need to insure that all participants on a subnetwork use the same parameter values. A bad choice of parameter values can significantly degrade the network performance. Using different values, even if the values are reasonable, can lead to a breakdown of the network precluding interoperability. A list of the parameters and their recommended values is provided in a separate document entitled "MIL-STD-188-220 Protocol Parameters and Values". All systems should utilize these values. The maximum number of octets in the information field of a UI, I or DIA PDU is an adjustable data link parameter in the range of

Downloaded from http://www.everyspec.com

708 - 3345. The definitions of additional parameters for the three types of operation are summarized in 5.3.8.1.1 through 5.3.8.1.3.

5.3.8.1.1 Type 1 logical data link parameters. The logical data link parameters for Type 1 operation shall be as follows:

a. Acknowledgment timer. The acknowledgment timer is a data link parameter that shall define the timeout period (TP) during which the sending station shall expect an acknowledgment from a specific destination station. The acknowledgment timer should not be activated until the corresponding PDU has been transmitted. TP shall take into account any delay introduced by the physical sublayer. The value of TP is described in Appendix C (C.4.3).

b. Busy-state timer. The busy-state timer is a data link parameter that defines the time interval following receipt of the URNR command PDU during which the station shall wait for the other station to clear the busy condition. Default value is 120 seconds.

c. Maximum number of retransmissions, N4. N4 is a data link parameter that indicates the maximum number of times that an UI or TEST command PDU is retransmitted by a station trying to accomplish a successful information exchange. Normally, N4 is set large enough to overcome the loss of a PDU due to link error conditions. The maximum number of times that a PDU is retransmitted following the expiration of the acknowledgment timer is established at protocol initialization. This value is in the range of 0 through 5 and defaults to 2. The retransmission of PDUs may be overridden by the Quiet Mode parameter, which is described in 5.3.11.2.

d. Minimum number of octets in a PDU. The minimum-length valid data link PDU shall contain 2 flags, 2 addresses, one 8-bit control field, and the FCS. The minimum number of octets in a valid data link PDU shall be 9.

5.3.8.1.2 Type 2 logical data link parameters. The logical data link connection parameters for Type 2 operation shall be as follows:

a. Acknowledgment timer. The acknowledgment timer is a data link connection parameter that shall define the time interval during which the station shall expect to receive acknowledgment to one or more outstanding I PDUs or an expected response to a sent U command PDU. The acknowledgment timer should not be activated until the corresponding PDU has been transmitted. Time values are established at protocol initialization and are in the range of 10 to 1800 seconds in one-second increments. Default is 120 seconds.

Downloaded from http://www.everyspec.com

b. P-bit timer. The P-bit timer is a data link connection parameter that defines the time interval during which the station shall expect to receive a frame with the F-bit set to 1 in response to a sent Type 2 command with the P-bit set to 1. The P-bit timer should not be activated until the corresponding PDU has been transmitted. Time values are established at protocol initialization and are in the range of 10 to 60 seconds in increments of 1 second. Default is 10 seconds.

c. Reject (REJ) timer. The REJ timer is a data link connection parameter that defines the time interval during which the station shall expect to receive a reply to a sent REJ or SREJ PDU. The REJ timer value shall be equal to or less than twice the acknowledgment timer. The REJ timer should not be activated until the corresponding PDU has been transmitted.

d. Maximum number of retransmissions, N2. N2 is a data link connection parameter that indicates the maximum number of times that a PDU (including the S command PDU that is sent as a result of the acknowledgment P-bit or REJ timer expiring) is sent, following the running out of the acknowledgment timer, the P-bit timer, or the REJ timer. The maximum number of times that a PDU is retransmitted following the expiration of the timers is established at protocol initialization. This value is in the range of 0 through 5 and defaults to 2. The retransmission of PDUs may be overridden by the Quiet Mode parameter, which is described in 5.3.11.2.

e. Maximum number of outstanding I PDUs, *k*. The maximum number (*k*) of sequentially numbered I PDUs that the sending station may have outstanding (i.e. unacknowledged) on a single data link connection simultaneously. The value of this parameter is in the range 1 through 127. (This value of this parameter may be established through the use of the Type 2 *k* Window field of an XNP message as described in Appendix E, “Type 2 Parameters”.)

f. Maximum number of outstanding I PDUs at which an acknowledgment is requested, *k2*. The maximum number (*k2*) of outstanding (i.e. unacknowledged) I PDUs that can be sent by a source station on a data link connection before the station requests acknowledgment. When this threshold is reached the sending station sends an S PDU that both acknowledges received I frames and causes an S PDU to be sent in return to acknowledge outstanding I PDUs. The value of this parameter is in the range 1 through 127, but would normally be less than or equal to the value of parameter *k*.

g. Maximum number of outstanding received I PDUs threshold, *k3*. The maximum number (*k3*) of correct in sequence I PDUs received on a data link connection since the last I

Downloaded from http://www.everyspec.com

PDU received on the data link connection was acknowledged. When this threshold is reached the receiving station generates an S PDU to acknowledge received frames. The value of this parameter is in the range 1 through 127, but would normally be less than or equal to the value of parameter *k*.

h. Response delay timer, percent. The amount of time, as a percent of Type 2 Acknowledgment Timer seconds, that a station waits after an I PDU Response or an I PDU Command with its P-bit set to 0 is received until it is acknowledged by transmission of an S PDU in the case that no other frames are available for transmission. The value of this parameter is in the range of 0 - 99%. (The value of this parameter may be established by the Type 2 Acknowledgment Timer and Response Timer fields of an XNP Parameter Update message as described in Appendix E, "Type 2 Parameters" or from the Protocol Parameters Table.)

i. Minimum number of octets in a PDU. A minimum-length valid data link PDU shall contain exactly 2 flags, 2 address fields, 1 control field, and the FCS. Thus, the minimum number of octets in a valid data link PDU shall be 9 or 10, depending on whether the PDU is a U PDU, or an I or S PDU, respectively.

5.3.8.1.3 Type 4 logical data link parameters. The logical data link parameters for Type 4 operation shall be as follows:

a. Acknowledgment (T1) timer. The T1 timer is the maximum time a station shall wait for an acknowledgment of a transmitted DIA PDU before that PDU is retransmitted. The value of T1 shall be in the range of 5-120 seconds in increments of 0.2 seconds. Each DIA PDU transmitted shall be assigned a T1 timer. When the T1 timer expires for DIA PDU, that DIA PDU shall be retransmitted in the next transmission opportunity for that precedence, assuming the N2 count has not been reached. DIA PDUs with only one destination will be discarded if the destination replied with a DRNR or DRR response PDU. If the DIA PDU is multi-addressed, the receive station is removed (nulled) from the destination address field. This timer shall be paused whenever the net is busy with voice. This timer is resumed when voice transmission has completed.

b. Maximum number of retransmission attempts, N2. The N2 parameter shall indicate the maximum number of retransmission attempts to complete the successful transmission of a DIA PDU. The value of N2 shall be the maximum retransmit value (range = 0-5).

c. k maximum number of outstanding DIA frames. The value of *k* indicates the maximum number of DIA PDUs that a station may have outstanding (awaiting acknowledgment) to all stations at any given time. The value of *k* ranges from 5 - 20 DIA PDUs.

Downloaded from http://www.everyspec.com

d. Minimum number of octets in a PDU. A minimum-length valid data link PDU shall contain exactly 2 flags, 2 address fields, one (1) 16-bit control field, and the FCS. Thus, the minimum number of octets in a valid data link PDU shall be 10.

e. ACK list length. The number of Type 4 DIA frames remembered in the list used to detect and discard duplicates. The number in the list can range from 0 - 255. The value of "0" is used to turn off this detect capability.

5.3.9 Frame transfer. After the station has joined the net, it can begin to send frames. The data link layer shall request the transmission of a frame by the PL.

5.3.9.1 PDU transmission. The data link layer initiates transmission by building a transmission unit and passing it to the PL. The elements of a transmission unit include one Transmission Header (see 5.3.1), one or more PDUs (see data link concatenation, below), the additional bits resulting from the operations of zero-bit-insertion, optional FEC encoding, optional TDC and optional scrambling. To request transmission, a PL-Unitdata-Request is issued by the data link layer protocol after a transmission unit has been constructed. PDUs shall be queued for transmission in such a manner that the highest precedence PDUs are transmitted before lower precedence PDUs. If a prioritized net access scheme is active, the precedence access level used shall be the precedence of the PDU that is to be transmitted next. Transmission units of the same precedence shall be in first-in first-out (FIFO) order. Type 2 I PDUs for a particular connection shall be transmitted in the order of their sequence numbers. Any PDUs may be concatenated at the data link layer or PL except Type 1 PDUs with the P bit set to 1.

5.3.9.2 Data link concatenation. The sending station may concatenate any PDUs, except Type 1 PDUs that require the TP timer (P bit set to 1), by using one or two flags to separate each PDU. All receiving stations shall be able to de-concatenate the reception into separate PDUs. The combined length of the concatenated PDUs, before 0-bit insertion, may not exceed the established maximum PDU size for a single PDU (see 5.3.8.1). The PDUs are concatenated after the 0-bit insertion algorithm is applied. FEC, with or without TDC, and scrambling are optionally applied before the transmission unit is passed to the PL in a PL-Unitdata-Request. Data link concatenation to add another interior data frame shall not be performed if the resulting frame would take longer to transmit than the maximum transmit time allowed for the network. Data link concatenation is shown in Figure 22.

Downloaded from http://www.everyspec.com

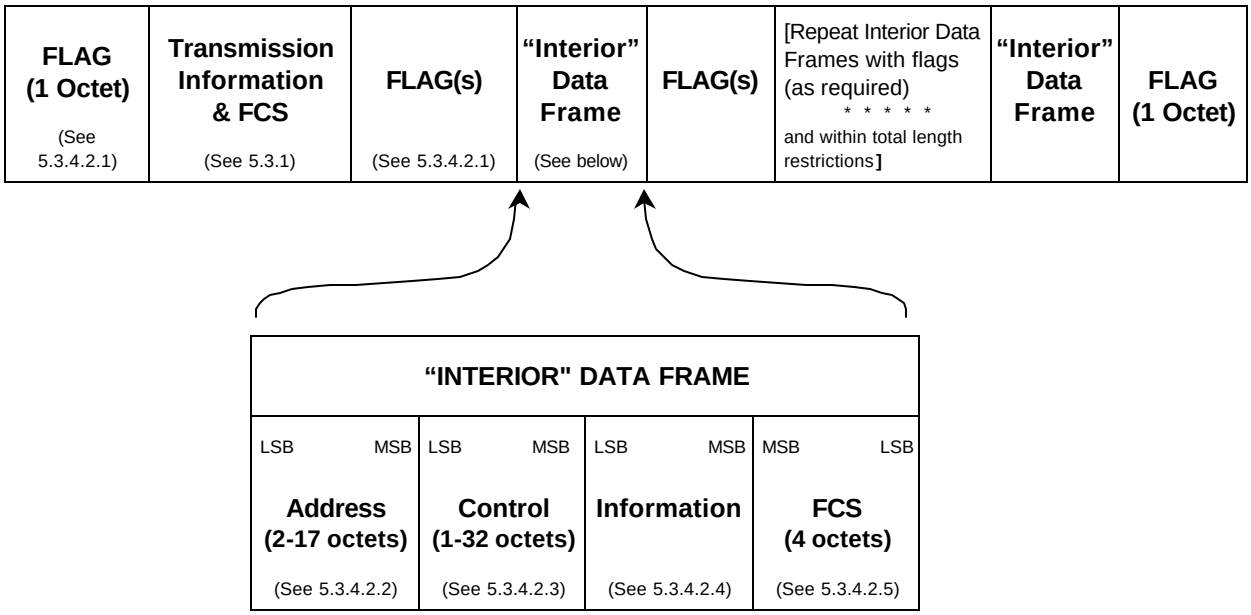

FIGURE 22. Data link concatenation.

5.3.9.3 Physical layer concatenation. PL concatenation does not apply when Packet Mode is used. More than one PDU may be passed to the PL without waiting for an intervening NAD period. The time to transmit the combined length of the transmission frame, shall not exceed the maximum transmit time allowed for the network. The PL shall transmit each transmission unit following the complete PL procedures with no additional bits between Interior Transmission Units (except for bit synchronization when used in Asynchronous Mode). PL concatenation is shown in Figure 23. Note that the Phasing field described in 5.2.1.2 shall precede the first Interior Transmission Unit only.

Downloaded from http://www.everyspec.com

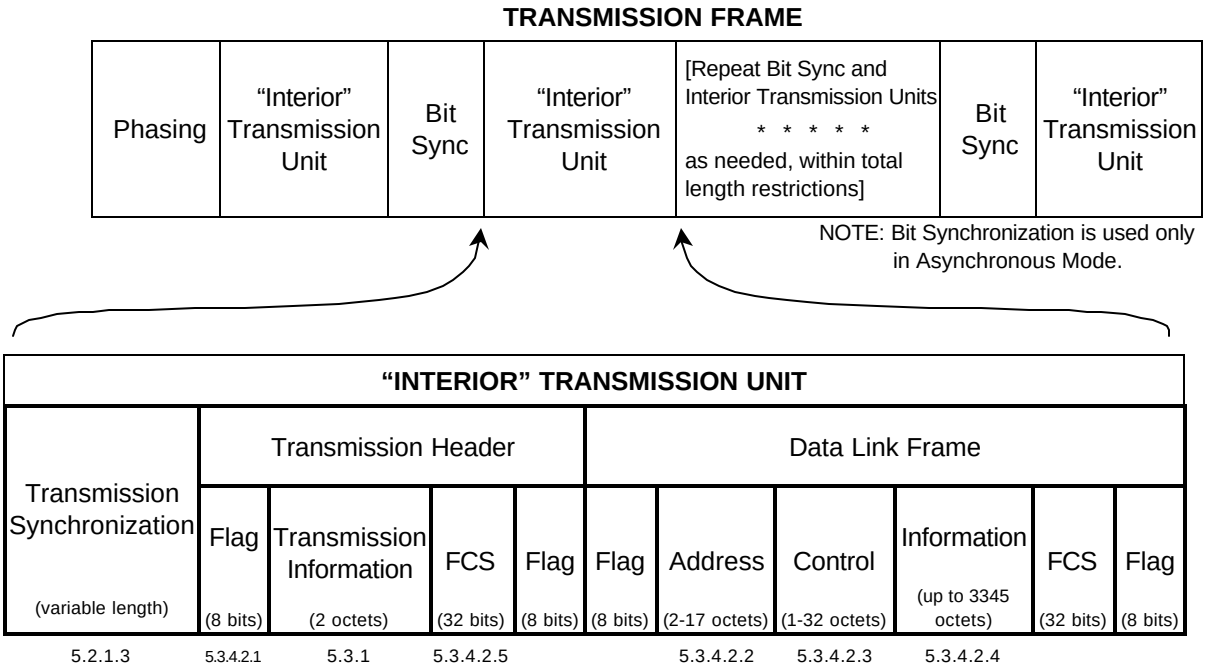

FIGURE 23. Physical-layer concatenation.

5.3.9.4 PDU transmissions. Both data link layer (DL) and PL concatenation may be used to build a single transmission frame. All types of operation PDUs, except Type 1 PDUs with the P-bit set may be concatenated within the same single transmission frame. PDUs are placed in the appropriate precedence-level queue, with each level queue using a single FIFO order. If the first PDU in the highest precedence level queue (or only queue) may be concatenated, then other PDUs may be concatenated with that PDU even if a PDU that does not allow concatenation is queued ahead of them. The PDU that did not allow concatenation shall be at the head of its appropriate queue for the next net access period. If the first PDU in the highest precedence level queue (or only queue) does not allow concatenation, it shall be the only PDU transmitted in that net access period.

5.3.10 Flow control. Flow control provides the capability of reducing the allowed input rate of information to prevent congestion to the point where normal operation may become impossible. The control-field sequence numbers are available for this service.

5.3.10.1 Type 1 flow control. Type 1 transmissions can be acknowledged or unacknowledged. Acknowledged and unacknowledged operations can perform flow control using URR and URNR messages. These messages announce the station's ability to accept incoming frames.

Downloaded from http://www.everyspec.com

5.3.10.2 Type 2 flow control. The N(S) and N(R) are used in conjunction with the V(S) and V(R) to control data flow. Flow control is implemented by the window method. The window defines the maximum number of undelivered frames a given user may have outstanding. The maximum number (*k*) of sequentially numbered I PDUs that may be outstanding (that is, unacknowledged) at any given time is a data link connection parameter, which shall never exceed 127. The incremental updating of N(R) acts as the positive acknowledgment of transmitted frames up to, but not including, that frame number. The window flow-control mechanism requires that the highest sequence number transmitted by the user be less than the sum of the last received N(R) plus *k* mod MODULUS (see 5.3.5.2.1). Window size (*k*) is a feature that is agreed upon by the users at initialization. The larger the window, the greater the traffic loading a given user places on a single channel (SC).

5.3.10.3 Type 4 flow control. Type 4 flow control is performed using DRR and DRNR messages. These messages indicate a station's ability to accept incoming DIA frames. In addition, a window method is used to define the maximum number of frames a given station may have outstanding. The maximum number of DIA PDUs that may be outstanding (unacknowledged) at any given time is the Type 4 *k* parameter.

5.3.11 Acknowledgment and response. All UI, DIA or I PDUs that require an acknowledgment shall be acknowledged except for the following cases:

a. the control field of the received PDU specifies that no acknowledgment is required,

b. the Quiet Mode (described in 5.3.11.2), has been set to ON,

c. the receiving station is a group (including global) addressee only,

d. the receiving station's individual address is not in the address field, or

e. the PDU is invalid.

5.3.11.1 Acknowledgment. Acknowledgments are applicable for Type 1, Type 2 and Type 4 operations.

5.3.11.1.1 Type 1 acknowledgment. Each PDU, with the P-bit set to 1, shall be responded to before another PDU is transmitted. This is defined as a coupled acknowledgment. All UI and TEST command PDUs that have the P-bit set to 1 shall be acknowledged. The RHD procedures (see C.4.2) shall be followed by all stations on the network to allow each responding station an interval in which they can transmit their response.

Downloaded from http://www.everyspec.com

5.3.11.1.2 Type 2 acknowledgment. Type 2 PDUs that require acknowledgment shall activate the acknowledgment timer. Type 2 also uses P and F-bit procedures for acknowledgments, but these P and F-bit procedures do not involve coupled acknowledgments. The Type 2 operation does not use the RHD timer, which allows receiving stations to send their acknowledgments during the current net access period. All acknowledgments are transmitted in another net access period. An I PDU acknowledgment does not necessarily correspond on a one-to-one basis with the I PDU and does not necessarily apply to the immediately preceding I PDU.

5.3.11.1.3 Type 4 acknowledgment. The DIA PDU shall activate the acknowledgment timer. The Type 4 operation does not use the RHD timer. All acknowledgments are sent in another channel access period. All DIA PDUs are independently acknowledged.

5.3.11.2 Quiet mode. The protocol shall allow an operator to initiate Quiet Mode as an override feature that, when invoked, prevents any transmission (including retransmission) without explicit permission from the operator. As a security feature, the operator shall be able to turn off automatic transmissions but still continue to receive. Normal protocol exchanges shall occur when the Quiet Mode is OFF. Only the operator can initiate a transmission when the Quiet Mode is ON. The Quiet Mode shall override the Maximum Number of Retransmissions data link parameters. The default value of the Quiet Mode is OFF. If the Quiet Mode is ON during Type 2 operations, the flow control mechanism and retransmission timers in the remote system will eventually cause the connection to be lost. UI, I, or DIA PDUs received by a station with Quiet Mode ON shall be serviced in the normal way except nothing will be returned nor queued for later transmission.

5.3.11.3 Immediate retransmission. Certain time critical exchanges require immediate retransmission if the acknowledgment is not received in the allocated response interval. This is accomplished by using the special address of 3 in the destination field with the Type 1 operation with the P-bit set to 1. All receiving stations calculate their TP based upon the total number of individual and special addresses. The sending station shall not include the special address 3 in its TP calculation and shall schedule any necessary retransmissions during the longer TP experienced by other stations.

5.3.12 Invalid frame. A frame is invalid if it has one or more of the following characteristics:

a. not bounded by a beginning and ending flag,

b. too short,

c. too long,

Downloaded from http://www.everyspec.com

d. has an invalid address or control field, and

e. has an FCS error.

A frame is too short if it contains less than 9 bytes. A frame is too long if it exceeds the maximum PDU length as described in 5.3.8.1. Any invalid frame shall be discarded.

5.3.13 Retransmission. The data link layer will retransmit a command frame waiting for a response. The default number of retransmissions is 2, but the data link layer protocol may be initialized to automatically retransmit 0 to 5 times. If the Quiet Mode is ON, no automatic retransmissions shall be made.

5.3.14 Error detection and correction (EDC). FEC coding alone, or FEC coding in unison with TDC, may be used to provide EDC capabilities to compensate for errors induced during transmission. If selected, the FEC process shall be used to encode the data link frame of 5.3.4. If selected, the TDC process shall be applied to the FEC-encoded data link frame and to the fill bits. Three modes of EDC shall be supported: FEC OFF, FEC ON with TDC, and FEC ON without TDC (NOTE: FEC ON without TDC may be used when the transmission channel provides the TDC capability). The EDC modes are selectable.

5.3.14.1 Forward-error-correction coding. When FEC is selected, the Golay (24,12) cyclic block code, described in detail in Appendix F, shall be used for FEC. The generator polynomial to obtain the 11 check bits shall be

$$g(x) = x^{11} + x^{10} + x^6 + x^5 + x^4 + x^2 + 1$$

where g(x) is a factor of $x^{23} + 1$.

5.3.14.2 Forward-error-correction preprocessing. When either FEC only or FEC/TDC is selected, data bits shall be divided into a sequence of 12-bit segments prior to Golay encoding. The total number of 12-bit segments shall be an integral number. If FEC/TDC is selected and a coupled acknowledgment of Type 1 URR, URNR and TEST Response frames with their F-bit set is being transmitted, the coupled acknowledgment frame shall be duplicated and then data link concatenated to the end of the original coupled acknowledgment frame. This provides a receiving station two opportunities for capturing an error-free frame without increasing the size of the transmission. This shall not be applied when the four octets addressing, described in 5.3.4.2.2.1.2, is used. If the data bits do not divide into an integral number of 12-bit segments, after coupled acknowledgment duplication (as appropriate), then from 1 to 11 zeros (0's) shall be added at the end to form an integral number of 12-bit segments.

Downloaded from http://www.everyspec.com

5.3.14.3 Time-dispersive coding (TDC). TDC bit interleaving may be selected in unison with FEC. When TDC is selected, data shall be formatted into a sequence of TDC blocks composed of sixteen 24-bit Golay (24, 12) codewords (that is, there are 384 FEC-encoded bits per TDC block). Each TDC block shall contain a total of 16 FEC codewords. If the last TDC block of a message contains less than 16 FEC codewords, fill codewords shall be added to complete the TDC block. These 24-bit fill codewords shall be created by Golay-encoding an alternating sequence of 12-bit data words, with the first word composed of 12 ones followed by a word composed of 12 zeros. The fill codewords shall alternate until the TDC block is filled. The TDC block shall be structured into a 16 x 24 matrix (the Golay codewords appear as rows), as shown in Figure 24.

A_1 through A_{24} are the bits of the first Golay codeword. A_{25} is the first bit of the second Golay codeword. Each TDC block matrix shall be rotated to form a 24 x 16 matrix. The Golay codewords now appear as columns, as shown in Figure 25. The TDC block is transmitted row by row with the LSB (A_1) of the first row first. At the receiver, the TDC-encoded bit stream shall be structured into a 24 x 16 matrix. Each received TDC block matrix shall be rotated to form the original 16 x 24 matrix, as shown in Figure 24. The TDC decoder at the receiver shall perform the inverse of the TDC encoding process.

A_1	A_2				A_{23}	A_{24}
A_{25}	A_{26}				A_{47}	A_{48}
A_{49}	A_{50}				A_{71}	A_{72}
A_{361}	A_{362}				A_{383}	A_{384}

Golay Codeword in each row
$A_1, A_2, \ldots, A_{23}, A_{24}$

FIGURE 24. 16 x 24 matrix before interleaving.

Downloaded from http://www.everyspec.com

A_1	A_{25}				A_{337}	A_{361}
A_2	A_{26}				A_{338}	A_{362}
A_3	A_{27}				A_{339}	A_{363}
A_{24}	A_{48}				A_{360}	A_{384}

Golay Codeword in each row
A_1, A_{25} , ... A_{337}, A_{361}

FIGURE 25. Transmitter's 24 x 16 matrix after interleaving.

5.3.15 Data scrambling. Data scrambling shall be performed if the transmission medium does not have a DC response and there is the possibility that "long" strings of NRZ ones or zeros are transmitted. Long is a relative term that is dependent on the data rate, the low frequency channel cutoff frequency, and the channel S/N, since at low S/N there is less margin for DC drift.

a. At the Data Link layer, the Transmission Header selects a CCITT V.36 scrambler, which includes a randomizer function as well as a pseudo-noise (PN) generator. It is applied inside the FEC (that is, before FEC is applied).

b. CCITT V.36 scrambling shall not be applied outside the FEC because bit errors at the receiver will be extended. In addition, a CCITT V.33 scrambler, which uses a PN generator but not a randomizer, is specified for use at the PL. In a high BER environment this extension will become catastrophic. For that reason a CCITT V.33 scrambler, which uses a PN generator but not a randomizer, is specified for use at the PL (as part of the multi-dwell protocol; see J.3.3). In both cases, there is a very small probability that the interleaving for the Data Link layer scrambler or the fixed PN sequence for the PL scrambler may do more harm than good. Therefore, they are individually selectable. Both scramblers should not be used at the same time. If CCITT V.36 scrambling/descrambling is used, the contents of the 20-state shift register shall be initialized to all ones prior to scrambling or descrambling data link frames in each interior transmission unit. The adverse state detector (ASD) counter shall be initialized such that at least 32-bits will have been counted, starting from the first bit input to the 20-state shift register, when the first adverse state is detected. The operation of the

Downloaded from http://www.everyspec.com

scrambling/descrambling shall be as shown in Figure 26. Figure 27 illustrates an example implementation for the CCITT V.36 scrambling/descrambling.

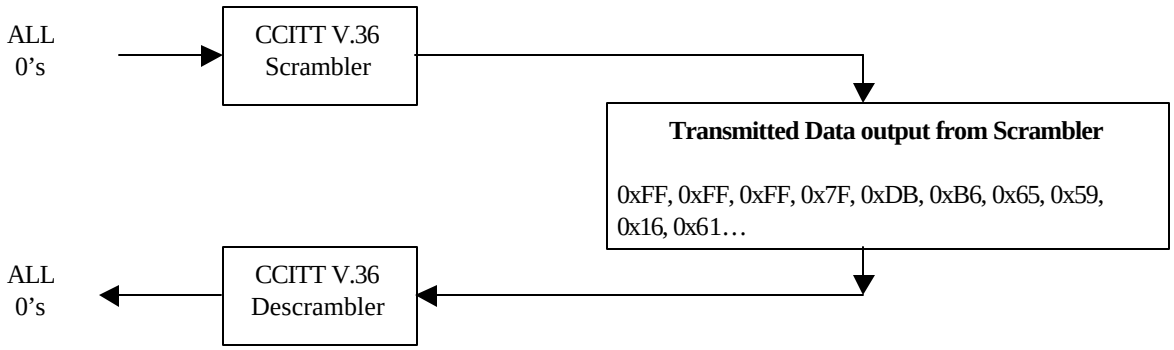

FIGURE 26. Required CCITT V.36 scrambling/descrambling operation.

Downloaded from http://www.everyspec.com

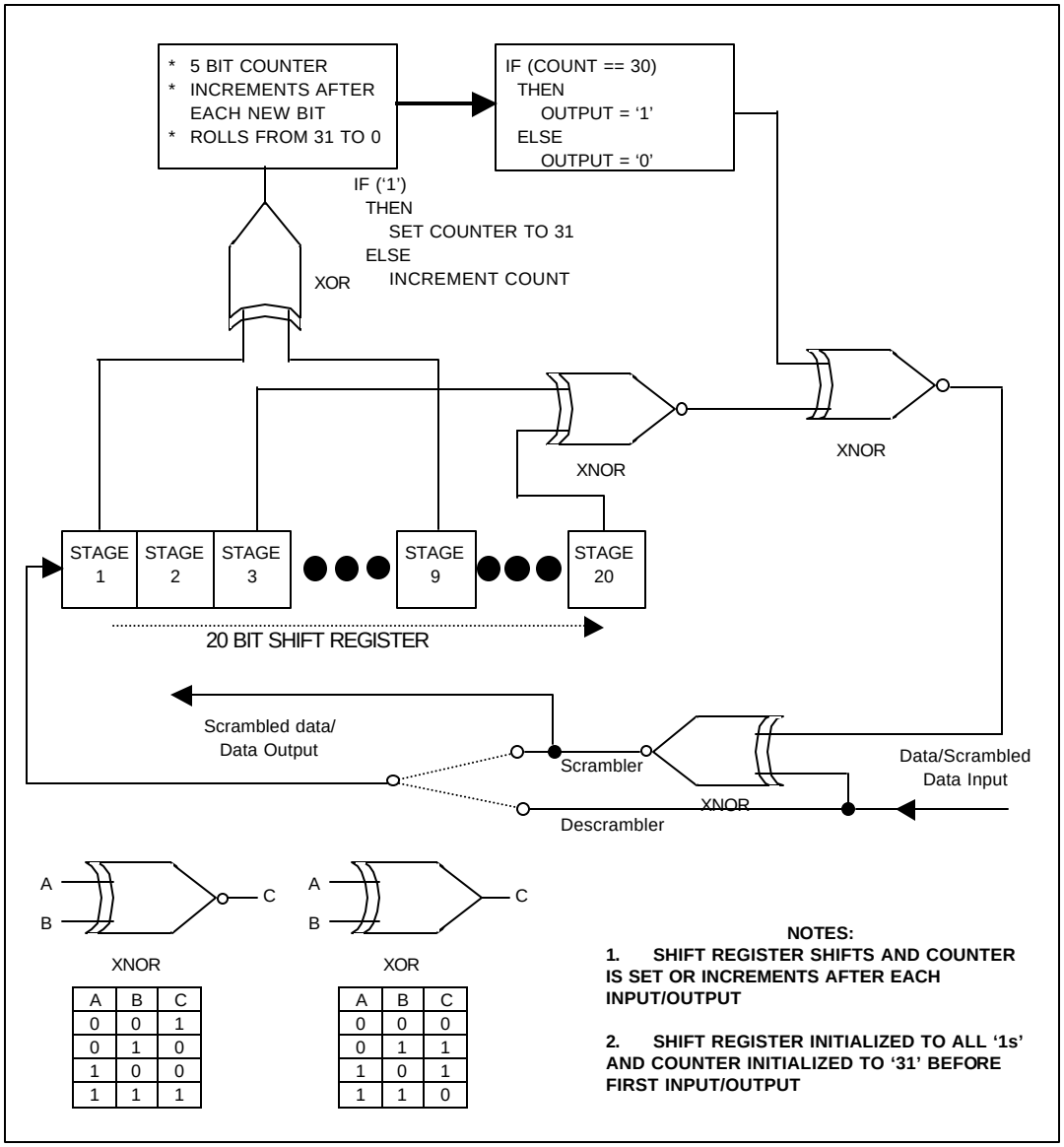

A	B	C
0	0	1
0	1	0
1	0	0
1	1	1

A	B	C
0	0	0
0	1	1
1	0	1
1	1	0

FIGURE 27. Example implementation of CCITT V.36.

5.3.16 Data link layer interactions. The data link layer interacts with both the next higher and next lower layer to pass or receive information regarding services requested or performed. Three primitives are used to pass information for the sending and receiving of data across the upper layer boundary.

a. Requests for transmission of data are sent by the upper layer, using the data link layer (DL) Unitdata Request primitive, with the following parameters:

Downloaded from http://www.everyspec.com

DL-Unitdata Request
- Message ID
- Destination(s)
- Source
- Topology Update ID
- Quality of Service
  - Precedence
  - Throughput Requested (Normal/High)
  - Delay Requested (Normal/Low)
  - Reliability Requested (Normal/High)
- Data/Data Length

b. Indications are provided to the upper layer through the DL-Unitdata Indication and DL-Unitdata Status Indication primitives with the following parameters:

DL-Unitdata Indication
- Destination(s)
- Source
- Topology Update ID
- Data/Data Length

DL-Status Indication
- Message ID
- Destination(s)
- Acknowledgment Success/Failure
- Connection Status
- Neighbor detection

c. Descriptions of the above parameters follow:

(1) Message ID is an indicator established by the upper layer in the DL-Unitdata Request and used to associate a subsequent DL-Status Indication acknowledgment status with that request.

(2) The destination(s) can be 1 to 16 individual, special or multicast (including global) addresses.

(3) The source address is the individual address of the outgoing link.

Downloaded from http://www.everyspec.com

(4) Topology Update ID, in a DL-Unitdata Request, shall contain the most recent Topology Update ID sent from the upper layer. Topology Update ID, in a DL-Unitdata Indication, shall contain the Topology Update Identifier field from the Transmission Header.

(5) Quality of Service parameters are used to determine the service provided by the data link layer.

(a) Precedence parameters are used by the prioritized transmission scheme and are used to order outgoing queues. The precedence levels available to the network will be mapped into three levels (urgent, priority, and routine) in the data link layer. Precedence levels in the network layer shall be mapped as shown in Table VII.

(b) Precedence and the other Quality of Service parameters are used to select a preferred data link type of procedure. The recommended mapping shown in Table VIII is provided for guidance.

(6) Data/Data Length is the block of data exchanged between the data link layer and its upper layer user, and an indication of the data's length.

(7) Acknowledgment Success/Failure is an indicator to inform the upper layer whether a data link acknowledgment was received from the remote station when high reliability was requested in a Unitdata Request.

(8) Connection Status is an indicator to inform the upper layer if a Type 2 connection has been established, reset or disconnected.

(9) Neighbor detection is an indicator to inform the upper layer when a data link transmission is detected from a previously unknown station.

Downloaded from http://www.everyspec.com

TABLE VII. Network layer to data link layer precedence mapping.

Network Precedence	Data Link Precedence
Critic/ECP Flash Override Flash Network Control (NETCON) Internet Control	URGENT
IMMEDIATE PRIORITY	PRIORITY
ROUTINE	ROUTINE

TABLE VIII. Mapping intranet TOS field to data link TOS.

TOS					STATION CLASS (see 5.3.3.5)			
	D	T	R		Precedence	A	B	C	D
	0	0	0		Urgent	1 (ACK)	1 (ACK)	1 (ACK)	1 (ACK)
	(& other)				Priority	1 (ACK)	2	1 (ACK)	2
					Routine	1 (No ACK)	2	4	4
	1	0	0		Urgent	1 (ACK)	1 (ACK)	1 (ACK)	1 (ACK)
					Priority	1 (ACK)	2	1 (ACK)	2
					Routine	1 (No ACK)	1 (No ACK)	1 (No ACK)	1 (No ACK)
	0	1	0		Urgent	1 (ACK)	2	1 (ACK)	2
					Priority	1 (ACK)	2	1 (ACK)	2
					Routine	1 (No ACK)	2	4	2
	0	0	1		Urgent	1 (ACK)	2	1 (ACK)	2
					Priority	1 (ACK)	2	1 (ACK)	2
					Routine	1 (ACK)	2	4	2

NOTE: Type 3 Immediate Retransmission is invoked for Urgent precedence messages when Delay, Throughput and Reliability (DTR) is 000 or 100.

Downloaded from http://www.everyspec.com

5.4 Network layer.

5.4.1 Intranet protocol. The Intranet layer (IL), layer 3a, has been dedicated to routing intranet packets between a source and possibly multiple destinations within the same radio network. The IL also accommodates the exchange of topology and connectivity information. An Estelle language formal specification of the IL is available via the CNR Implementation Working Group World Wide Web page: http://www-cnrwg.itsi.disa.mil.

5.4.1.1 Intranet header. Figure 28 defines the Intranet header. The Version Number, Message Type, Intranet Header Length (HLEN) and Type of Service (TOS) fields shall be present in all Intranet Headers. When optional intranet relaying is being utilized all fields shall be present in the Intranet Header as appropriate based on the topology of the network. The Intranet Header shall be exchanged using UI, I and/or DIA PDUs.

MSB *7*	*6*	*5*	*4*	*3*	*2*	*1*	*LSB* *0*
MESSAGE TYPE				VERSION NUMBER			
INTRANET HEADER LENGTH							
TYPE OF SERVICE							
MESSAGE IDENTIFICATION NUMBER							
SPARE				MAX. HOP COUNT			
ORIGINATOR ADDRESS							
DESTINATION/RELAY STATUS BYTE 1							
DESTINATION/RELAY ADDRESS 1							
DESTINATION/RELAY STATUS BYTE 2							
DESTINATION/RELAY ADDRESS 2							
. . .							
DESTINATION/RELAY STATUS BYTE N							
DESTINATION/RELAY ADDRESS N							

FIGURE 28. Intranet header.

5.4.1.1.1 Version. The version number shall indicate which version of the intranet protocol is being used. The current value is 0.

Downloaded from http://www.everyspec.com

5.4.1.1.2 Message types. The message type is a number 0 to 15 which indicates the type of data in the data field of the IL packet. Table IX lists all the valid message types. Since the message type field in the intranet header is always present in information frames of any link layer type, it is used to determine what type of data is borne by the information frame. The transmission and reception of all valid message types are supported such that systems using MIL-STD-188-220 implementations can support any of the upper layer protocols corresponding to the valid message types. Systems using MIL-STD-188-220 shall not be required to use all the upper layer protocols indicated in the message type field.

TABLE IX. Intranet message types.

0	Reserved
1	Intranet Acknowledgment
2	Topology Update
3	Topology Update Request
4	IP Packets
5	ARP/RARP
6	XNP
7	MIL-STD-2045-47001 Header
8	Reserved
9	Reserved
10	Segmentation/Reassembly (S/R) Protocol
11 to 15	Spare

5.4.1.1.2.1 ARP/RARP. The ARP is defined in Request For Comment (RFC) 826. All systems shall be able to respond to an ARP request in accordance with RFC 826. The Reverse Address Resolution Protocol (RARP) is defined in RFC 903. For hardware type (ar&hrd) = 22 (CNR), the source hardware address (ar$sha) field shall contain the data link address (see 5.3.4.2.2). The hardware address length (ar$hln) field value (specifying the number of octets in the hardware address field) shall be set to one octet when the net is configured for 7-bit addressing or to four octets when the net is configured for 32-bit addressing.

5.4.1.1.2.2 XNP. XNP messages are used for CNR management. See Appendix E.

5.4.1.1.2.3 MIL-STD-2045-47001 header. When set to 7, the Intranet message type field specifies a direct connection from the IL to the MIL-STD-2045-47001 Application header. This allows messages using N-layer pass through to utilize the upper layer services provided by the MIL-STD-2045-47001 header.

Downloaded from http://www.everyspec.com

5.4.1.1.2.4 Segmentation/Reassembly (S/R) Protocol. When the Intranet Message type is set to 10, it specifies a direct connection from the Intranet Header to the Segmentation/Reassembly Protocol header defined in MIL-STD-2045-47001. This allows messages using N-layer pass through to utilize the upper layer services provided by the Segmentation/Reassembly Protocol including segmentation, reassembly, ETE recovery, and delivery to any application as specified within the S/R header destination port number.

5.4.1.1.3 Intranet header length. The HLEN shall be the number of octets in the intranet header only. The minimum length is 3 octets.

5.4.1.1.4 Type of service (TOS). The TOS field in the intranet header is modeled exactly upon the Internet protocol (IP) TOS field, including the Precedence subfield.

5.4.1.1.5 Message identification number. The message identification number shall be a number, 0-255, assigned by the originating hosts. Together with the originator address it uniquely identifies each packet being relayed.

5.4.1.1.6 Maximum hop count. The maximum hop count shall be the maximum number of times this intranet packet can be relayed on the radio net. A hop is defined as a single link between two adjacent nodes. This number is set by the source host and is decremented each time a device receives the intranet header. If the maximum hop count is decremented to 0, the intranet packet shall not be forwarded any further, however it shall be processed locally if applicable.

5.4.1.1.7 Destination/Relay status byte. The Destination/Relay Status Byte (see Figure 29) shall provide intranet routing information for each destination and/or relay address. In addition, this octet also selects ETE intranet acknowledgments.

MSB *7*	*6*	*5*	*4*	*3*	*2*	*1*	*LSB* *0*
ACK	**DES**	**Relay Type**		**REL**	**Distance**		

FIGURE 29. Destination/Relay status byte.

5.4.1.1.7.1 Distance. The distance subfield specifies how many hops a relay address is away from the originator node. For final destination addresses which are not relayers, the distance field gives the number hops from the originator node to the destination node.

5.4.1.1.7.2 REL. The REL bit when set indicates that the given node will participate in relaying.

Downloaded from http://www.everyspec.com

5.4.1.1.7.3 Relay type. The Relay Type bits indicate the type of relaying to be performed. The relay types are defined in Table X. The value of 0 indicates source directed relay defined in Appendix I.

TABLE X. Relay types.

0	Source Directed Relay
1	Spare
2	Spare
3	Spare

5.4.1.1.7.4 DES. When the DES bit is set, the following address is at least one of the destinations for the packet. The following address may also be a next hop relay for another destination.

5.4.1.1.7.5 ACK. The ACK bit when set requests ETE intranet acknowledgments for the associated node only. The procedure for ETE intranet acknowledgment follows.

5.4.1.1.7.5.1 Receiving ETE intranet ACK. When a node receives an Intranet Packet with the ACK bit set, it shall return an Intranet Acknowledgment packet at the first possible opportunity. The Intranet Acknowledgment packet shall have the same Message Identification Number as the received Intranet Packet. The path specified in the Intranet Acknowledgment packet shall be the reverse path specified in the received Intranet Packet. The Intranet Acknowledgment packet shall specify exactly one destination, namely the originator of the received Intranet Packet.

5.4.1.1.7.5.2 ETE intranet ACK timeout. When a node sends an intranet packet with the ACK bit set, it shall start its ETE acknowledgment timer. The ETE acknowledgment timer is an intranet parameter that defines the period within which a sending station shall expect an acknowledgment from the destination(s). The value of the ETE acknowledgment timer shall be a fixed factor plus a factor proportional to the number of hops required for all destinations to receive the packet. The default value for the fixed factor shall be 20 seconds. The default value for the proportional factor shall be twice the value of the DL acknowledgment timer, multiplied by the number of hops to the furthest destination. The maximum value for the ETE Intranet Acknowledgment Timer shall be 10 minutes (600 seconds).

5.4.1.1.7.5.3 Receiving an intranet acknowledgment packet. When an Intranet Acknowledgment Packet is received, that destination shall be removed from the list of destinations from which an

Downloaded from http://www.everyspec.com

acknowledgment is required. When all destinations have acknowledged, no further action is taken at the IL.

5.4.1.1.7.5.4 Expiration of the ETE intranet ACK timer. When the ETE acknowledgment timer expires, the sending station shall retry the transmission of the Intranet packet. The number of retries shall be a value between 1 and 4, with a default of 2. Each retransmission may use a new path to each unacknowledging destination. If only one path exists to a destination, that path shall be used until either the acknowledgment is received or the maximum number of Intranet retransmissions is exhausted. If no acknowledgment is received after the maximum number of Intranet retransmissions, an IL-Status-Indication would be sent to the upper layer indicating acknowledgment failure.

The retransmitted packet shall have a recreated Intranet Header with the same TOS field and Message Identification Number. The Intranet Header shall be recreated to specify the new path to the destination. This recreated Intranet Header shall not specify paths to nodes that have already acknowledged the message. This recreated Intranet Header shall not specify paths to nodes from which an acknowledgment is not required. This recreated Intranet Header shall include paths to all nodes from which an acknowledgment is required, but from which an acknowledgment has not yet been received.

5.4.1.1.8 Originator address. The originator address shall be the link layer address of the originating node. Both single octet and four octets addressing may be used following the link layer addressing rules in 5.3.4.2.2. The four octets of address space shall be preceded by a single octet 32-bit marker subfield, as per 5.3.4.2.2.2.

5.4.1.1.9 Destination/Relay address. The intranet destination/relay address shall be the link layer address. It is either the destination address for an intranet packet or the relay address. The extension bit (LSB) is available for use by relaying procedures. Both single octet and four octets addressing may be used following the link layer addressing rules in 5.3.4.2.2. The four octets of address space shall be preceded by a single octet 32-bit marker subfield, as per 5.3.4.2.2.2.

5.4.1.2 Topology update. Connectivity and topology information of the intranet is essential for a node to initiate and/or perform intranet relay. Each node on the radio network needs to determine what nodes are on the network and whether they are 1 or more hops away. This information can be partially determined passively by listening to a node's traffic at layers 3a and 2 and/or actively by exchanging topology information. The topology update data structure, defined in Figure 30, has been provided for nodes in the intranetwork to exchange topology and connectivity information. Appendix H specifies the procedure for exchanging topology information between nodes.

Downloaded from http://www.everyspec.com

MSB *7*	*6*	*5*	*4*	*3*	*2*	*1*	*LSB* *0*
Topology Update Length							
Topology Update ID							
Node 1 Address							
Node 1 Status Byte							
Node 1 Predecessor Address							
Node 2 Address							
Node 2 Status Byte							
Node 2 Predecessor Address							
...							
Node N Address							
Node N Status Byte							
Node N Predecessor Address							

FIGURE 30. Topology update data structure.

5.4.1.2.1 Topology update length. The Topology Update Length field is the length in octets of topology update data. Topology Update Length shall not exceed the maximum transmission unit (MTU) minus 8 octets.

5.4.1.2.2 Topology update ID. The Topology Update ID is a number from 1 to 255. Together with the originator's link layer address, the Topology Update ID uniquely identifies each topology update generated by the originating node. This number is incremented by 1 every time a topology update is generated. The Topology Update ID for the first topology update generated shall be 1.

5.4.1.2.3 Node address. The Node Address is the link layer address of node in the intranet.

5.4.1.2.4 Node status byte. The *i*th Node Status Byte characterizes the link between originator host (the host whose address appears in the originator address of the intranet header) and the *i*th node predecessor whose address immediately follows the Node Status Byte as defined in Figure 31.

MSB *7*	*6*	*5*	*4*	*3*	*2*	*1*	*LSB* *0*
QUIET	NR	HOP LENGTH			LINK QUALITY		

FIGURE 31. Node status byte.

Downloaded from http://www.everyspec.com

5.4.1.2.4.1 Link quality. The Link Quality subfield for the *i*th node provides an assessment of the link quality between the *i*th node predecessor and the *i*th node. The Link Quality is set to 0 if the quality of a link is unknown. Increasing Link Quality value infers a poorer link. Link Quality is set to 7 to indicate that the node is static. Static nodes have pre-assigned data link addresses, and do not affect Intranet Topology as they enter and leave the network. Table XI lists the Link Quality values.

TABLE XI. Topology link quality values.

Link Quality	Description
0	Unknown
1	Best Link
2	
3	
4	
5	
6	Worst Link
7	Static Node

5.4.1.2.4.2 Hop length. The Hop Length subfield defined in Table XII indicates the distance in hops from the source to the given node. Hop Length = 1 means the node can be reached directly by the source - no relays are required. A hop length of 0 indicates the source node itself or that the source may know that node should be on the network but does not know where it is.

5.4.1.2.4.3 NR. The NR bit when set to 1 indicates that the node is not participating as a relayer.

5.4.1.2.4.4 Quiet. The Quiet bit, when set, indicates the node is either in quiet mode or going into quiet mode and cannot transmit any traffic.

Downloaded from http://www.everyspec.com

TABLE XII. Hop length values.

Hops	Description
0	Unknown
1	0 Relays required
2	1 relays required
3	
4	
5	
6	
7	6 or more relays required

5.4.1.2.5 Node predecessor address. Each node maintains intranet topology as routing tree rooted at itself. For the *i*th node in the routing tree, the Node Predecessor Address is the link layer address of the node one branch up from the *i*th node in the routing tree. The predecessor for all nodes within 1 hop of the originator node, which is the root of the routing tree is the originator node. The predecessor for all nodes n hops away is a node which is n-1 hops away from the originator and that can talk directly with the node n hops away. If the *i*th node has not been integrated into the source node's routing tree, the Node Predecessor Address for the *i*th node should be set to 0.

5.4.1.3 Topology update request message. The Topology Update Request message, Intranet Relay Message Type 3, consists of the Intranet Header with one originator and possibly multiple destination addresses. No Information field is permitted. The maximum hop count and distance field shall be set to 1. The Relay, Relay Type, and ACK bit shall be always zero. The DES bit shall be always 1. The destination address in the Intranet Header shall be the link layer address to which this request has been made. The addressing at the link layer may be either the broadcast address or the individual link layer addresses.

5.4.1.4 Intranet layer (IL) interactions. The IL (Layer 3A) interacts with both the next higher layer and next lower layer to pass or receive information regarding services requested or performed. Three primitives are used to pass information for the sending and receiving of data across the upper layer boundary.

a. Requests for transmission of data are sent by the upper layer, using the IL Unitdata Request primitive, with the following parameters:

IL-Unitdata Request
Destination(s)
Source

Downloaded from http://www.everyspec.com

Quality of Service
Precedence
Throughput (Normal/High)
Delay (Normal/Low)
Reliability (Normal/High)
Data/Data Length
Intranet Message Type
IL-Unitdata-ID

b. Indications are provided to the upper layer when data is received through the IL-Unitdata Indication primitive, with the following parameters:

IL-Unitdata Indication
Destination(s)
Source
Data/Data Length

IL-Status Indication
Acknowledgment failure
Intranet Path Status
IL-Unitdata-ID

c. Descriptions of the above parameters follow:

1. The destination can be 1 to 16 individual or DL multicast (including global) addresses.

2. The source address is the DL individual address of the outgoing link.

3. Quality-of-service parameters are used in determining the service provided by the IL. Quality of service parameters are identical to those at the DL, described in 5.3.16.c(5).

(a) Precedence shall be mapped from the TOS field (see 5.4.1.1.4) as follows:

PPP	Precedence
111	Network Control
110	Internet Control
101	CRITIC/Emergency Command Precedence (ECP)

Downloaded from http://www.everyspec.com

100	Flash Override
011	Flash
010	Immediate
001	Priority
000	Routine

where the LSB is shown to the right under PPP.

(b) The other Quality of Service parameters shall be mapped from the TOS field (see 5.4.1.1.4) as follows:

T=0	Normal Throughput
T=1	High Throughput
D=0	Normal Delay
D=1	Low Delay
R=0	Normal Reliability
R=1	High Reliability

(c) The ETE intranet acknowledgment procedures described in 5.4.1.1.7.5 shall be used when R=1, and relaying is used to deliver the message to any destination of the packet.

4. Data/Data Length is the block of data exchanged between the IL and its upper layer (i.e. IP) user, and an indication of the data's length.

5. Acknowledgment Failure is an indicator to inform the upper layer if an Intranet acknowledgment was not received from the remote station when high reliability was requested in an IL-Unitdata Request.

6. Whenever a node becomes reachable or unreachable, an Intranet Path Status indication is sent to the upper layer identifying the destination link address.

7. Intranet Message Type is defined in 5.4.1.1.2.

8. IL-Unitdata-ID is an indicator established by the upper layer in the IL-Unitdata Request and used to associate a subsequent IL-Status Indication acknowledgment status with that request.

5.4.2 Subnetwork Dependent Convergence Function (SNDCF). The ISO description of the network layer defines a subnetwork dependent convergence layer, between the intranet and Internet layers. The

Downloaded from http://www.everyspec.com

layer shall perform the necessary functions to assure that expected services are provided within a particular subnetwork type for both IP datagram exchanges and n-layer pass through exchanges. Note that the ISO description does not include n-layer pass through exchanges. Implementers shall insure that the functionality to support n-layer pass through is supported. The functions required to converge services within a MIL-STD-188-220 subnetwork (layers 3a and below) services are: (1) determine the complete list of IP final destinations within the subnetwork; (2) determine the associated subnetwork address(es) for each address; and (3) determine the subnetwork TOS requirements (reliability, throughput, delay, immediate retransmission and precedence). The preceding information is contained in the IP header (for IP datagram exchanges) or in the application interface (for n-layer pass through exchanges). If the IP protocol implementation does not provide the required information, the SNDCF must query the upper layer to "learn" the destinations and TOS. The SNDCF is only active for an IL-Unitdata request from the upper layer. The convergence functions for a MIL-STD-188-220 subnetwork using n-layer pass through exchanges or the Selective Directive Broadcast protocol described in RFC 1770 for IP datagram exchanges are described below.

5.4.2.1 Determine destination function. The Determine Destination function obtains final destination information from the upper layer protocol (IP header for IP datagram exchanges or 47001 application interface for n-layer pass through or the application associated with the Segmentation and Reassembly protocol for n-layer with S/R). For IP datagram exchanges, the IP destination address field of the IP header is examined first. If the address in that field is an individual address, broadcast address (all 1's), or multicast address (Class D IP address), the Determine Destination function is complete and it passes the single IP address to the Address Mapping Function. If the IP destination address is a directed broadcast address, (all ones in the host portion of the IP address only) the network portion of the IP address (NET ID) is compared to the local NET ID. If the NET ID portion of the directed broadcast address is not the same as the local NET ID, the single IP directed broadcast address is passed to the Address Mapping function. If the NET ID portion of the directed broadcast IP address is the same as the local NET ID, the Determine Destination function examines the IP option field for the presence of the multi-address IP option (selective directed broadcast). If the option is present, the list of individual IP addresses contained in the option is passed to the Address Mapping function. If the option is not present, the single IP directed broadcast address is passed to the Address Mapping function. For n-layer pass through exchanges, (both 47001 direct connection and S/R) the interface shall provide the necessary addresses using the IL Unitdata Request primitive.

5.4.2.2 Address mapping function. The SNDCF Address Mapping function is provided one or more addresses from the Determine Destinations function. The Address Mapping function determines the data link address(es) associated with an IP address or with the addresses provided in the IL Unitdata Request primitive. The Address Mapping function accesses an information base to determine the DL addresses associated with IP addresses or the addresses provided from the Application. Application broadcast address(es), IP broadcast (all 1's) addresses and directed broadcast address for the local subnetwork are mapped to the data link global address.

Downloaded from http://www.everyspec.com

5.4.2.3 Type of service (TOS) function. The SNDCF TOS function obtains the requirements from the IP TOS header field or the IL Unitdata Request primitive. The values in the field are provided to the IL protocol.

5.4.2.4 Intranet send request. After the SNDCF layer performs all of its functions, it issues an IL-Unitdata Request that includes the list of data link addresses and the TOS data.

Downloaded from http://www.everyspec.com

6. NOTES

(This section contains information of a general or explanatory nature that may be helpful, but is not mandatory.)

6.1 Subject term (key word) listing. The follow key words and phrases apply to this document.

CNR
Combat Network Radio
Data Communications Protocol
Data Link
Error Detection and Correction
Interoperability
Intranet
Logical Link Control
MAC
Media Access Control
NAD
Network Access Delay
Packets
Radio
Relay
Tactical Internet

6.2 Issue of the DoD index of specifications and standards. When this document is used in procurement, the applicable issue of the DoDISS will be cited in the solicitation.

6.3 Interoperability considerations. This section addresses some of the aspects that terminal designers and systems engineers should consider when applying MIL-STD-188-220 in their communications system designs. The proper integration of MIL-STD-188-220 into the total system design will ensure the interoperability of stations that exchange information over a data communications link consisting of a DMTD, a transmission channel, and a DMTD or C^4I system.

6.3.1 Transmission channel. For the purpose of this document, the transmission channel (from the transmitter to the receiver) is considered transparent to the DMTD subsystem. However, the transmission channel will be interoperable within itself. The transmission channel may be secured or non-secured, using such media as line-of-sight (LOS) radio, high frequency (HF) radio, wireline, and satellite communications (SATCOM).

Downloaded from http://www.everyspec.com

6.3.2 Physical interface. The specific details of the physical interface for connecting DMTDs to the equipment that implements the transmission channel are beyond the scope of this document. The actual physical connections will depend on the interface characteristics required by the particular transmission equipment. These unique physical interface characteristics may be defined in the equipment specifications or in technical interface specifications. Therefore, the requirements for the electrical features (such as data, clock, and control) and mechanical features (such as connectors, pin assignments, and cable) of the connection between the DMTD and the associated transmission channel equipment are left to the equipment designer. The design philosophy is that what appears at the input end of the transmission channel should be the same at the output end. Implementation notes for effecting a working interface to specific radios are provided in the following subparagraphs.

6.3.2.1 SINCGARS system improvement program (SIP) receiver/transmitter (R/T) interface. The DTE (DMTD or C^4I system) interacts with the DCE via an X.21 data interface and an External Control Interface. When the precedence level of the transmission changes, the DTE will set the precedence level for the new transmission via the External Control interface. This precedence level will correspond to the frame with the highest precedence value within the series of concatenated frames.

Information on interfaces for SINCGARS ASIP radios can be found in the following reference:

Interface Control Document (ICD)	Title
A3266178	SINCGARS ASIP – RT1523E Advanced SINCGARS SIP Interface Control Document

6.3.2.1.1 Carrier sense multiple access (CSMA) network access. Although all SINCGARS SIP R/Ts in a given network are not required to use the same CSMA slot offsets and limits for voice and/or precedence levels, it is highly recommended that the same slot settings be used within a network. All SINCGARS SIP R/Ts in a network will be using the same slot width (18ms - FH; 54ms - SC) and the same mode of operation (plain text or cipher text).

6.3.2.1.2 Network busy sensing and receive status. The presence of multiple stations on a single random access communications network requires voice/data Network Busy Sensing and the use of NAC to reduce the possibility of data collisions on the net. The combined Data and Voice Networks require cooperation between the DTE (DMTD or C^4I system) and the DCE.

The DCE indicates the presence of receive data and voice via the X.21 Indication line “I” signal. A precise determination of the network status is obtained via the X.21 DTE Receive line “R” signal in

Downloaded from http://www.everyspec.com

I = OFF and R = 1's ->	Idle/Transmission Completed
I = OFF and R = Flags ->	Data being transmitted
I = ON and R = Flags ->	Data being received
I = ON and R = 1's ->	Voice operation if this condition persists for more than 750 msec. From 0 to 750 msec the radio is busy, but voice or data reception can't be determined until either the presence of flags on the R-line for data or the expiration of 750 msec when voice reception is assumed.

The transmission of data takes effect by driving the X.21 Control line "C" (push-to-talk) and DTE Transmit line "T", as follows:

Verify I = OFF and R = 1's, then assert C = ON and send flags T = Flags

Verify I = OFF and R = Flags, then transmit data T = Data

Upon transmit completion, assert C = OFF and send T = 1's

The time between the SINCGARS SIP R/T detection of network busy and the determination of network busy with voice is added to any suspended timers. The timers are suspended in the INC only after network busy with voice is indicated. Therefore, adding the time period in which the radio detects network busy with "something" until network busy with voice is determined accounts for the period of time voice was actually present.

6.3.2.1.3 Network timing model parameters. The Network Timing Model is described in Appendix C. The model defines parameters necessary to insure interoperability. It is important to insure that all systems participating in a network use the same parameter values. Parameter values are provided in a separate document entitled "MIL-STD-188-220 Media Access Configuration (MAC) Parameters and Parameter Values". These parameters and values should be utilized by all systems.

6.3.2.1.4 Other SINCGARS SIP implementation details.

a. The RE-NAD slot assignment for Type 3 PDUs is offset=0, limit=0. The "offset" is the number of the first slot while the "limit" is the number of slots associated with the particular parameter (e.g., a precedence level). Offset=0, limit=0 means there is no randomized delay associated with the Type 3 PDUs or the returned Type 3 acknowledgments in the SIP R/T due to the RE-NAD process. The 0-second

Downloaded from http://www.everyspec.com

Immediate Mode scheduler is used with these PDUs and returned acknowledgments so that no additional randomized delay is incurred from the INC (where the scheduler is implemented).

b. The SINCGARS SIP R/T does not manipulate any trailing flags included in the data stream presented to it. These flags are transmitted over the air.

c. From the SINCGARS SIP R/T perspective, any trailing flags are part of the data stream and should be calculated into DATA.

d. The DTE (e.g. INC) will achieve synchronization with the SINCGARS SIP R/T within four flag sequences. Data may be sent upon detection of a valid flag sequence.

6.3.2.2 SINCGARS integrated COMSEC (ICOM) R/T interface.

Information on interfaces for SINCGARS ICOM radios can be found in the following reference:

Interface Control Document (ICD)	Title
A3017864	SINCGARS ICOM – Receiver-Transmitter Radio RT-1523

6.3.2.2.1 NRZ physical interface between DTE and R/T. The SINCGARS ICOM digital data interface to a DTE is a synchronous, unbalanced, half-duplex serial interface.

a. The signaling format is NRZ, at voltage levels compatible with those specified in MIL-STD-188-114A for a single receiver load termination.

b. Digital data rates of 600, 1200, 2400, 4800 and 16000 bps are supported by the ICOM R/T. When a data rate below 16000 bps is selected at a transmitter, a Data Rate Adapter (DRA) internal to the ICOM converts the data to 16000 bps, using majority logic FEC techniques.

c. The ICOM R/T also provides a receive squelch indication to the DTE when channel activity is sensed.

6.3.2.2.2 Network busy sensing and receive status. Network Busy Sensing provides a mechanism to manage channel access among members of a common network. Without managed channel access, multiple stations attempting simultaneous transmissions will collide, degrading network performance.

Downloaded from http://www.everyspec.com

Managing channel access also minimizes the network performance loss due to mixing both voice and data in a common net.

a. For both voice and digital data receptions, the DCE provides a receive squelch indication via the Analog Data Mode Control_Not (ADMC_N) line. This ADMC_N squelch indication is a composite signal from several internal sources. Using this signal, the worst-case network busy detect times are 350 msec for FH and 100 msec for SC.

b. For digital data receptions, the DCE presents a synchronous clock on the Digital Data Clock Out (DDCO) line. ADMC_N will typically precede DDCO for all digital data receptions. The exception is for PT 16000 bps data, when both ADMC_N and DDCO will be coincident.

c. For voice receptions, the DCE will provide a receive squelch indication via ADMC_N, but will not present DDCO.

d. If both ADMC_N and DDCO are considered as binary signals, there are four possible indications which a DTE can use to infer network status. Table XIII summarizes the four possible receive states and their interpretation.

TABLE XIII. SINCGARS ICOM receive states.

	ADMC_N Active	ADMC_N Inactive
DDCO Active	Digital data reception	Not Applicable
DDCO Inactive	Voice reception	R/T idle

6.3.2.2.3 Network timing model parameters. The Network Timing Model is described in Appendix C. Parameter values are provided in a separate document entitled “MIL-STD-188-220 Media Access Configuration (MAC) Parameters and Parameter Values”. These parameters and values should be utilized by all systems.

6.3.2.3 HAVEQUICK II R/T interface.

6.3.2.3.1 Network timing model parameters. The Network Timing Model is described in Appendix C. Parameter values are provided in a separate document entitled “MIL-STD-188-220 Media Access Configuration (MAC) Parameters and Parameter Values”. These parameters and values should be utilized by all systems.

Downloaded from http://www.everyspec.com

6.3.2.4 COMSEC interoperability. The COMSEC function provides a link encryption capability. In the traditional COMSEC mode of operation, the COMSEC function (normally implemented in ancillary equipment) is considered part of the transmission channel. In the embedded COMSEC mode, the COMSEC function is an integral part of the DMTD subsystem.

6.3.3 Data link layer. The following implementation details should be considered when implementing the DL of MIL-STD-188-220:

a. The first bit of the Transmission Header that is transmitted (after the flag) will be the FEC selection bit and the last bit transmitted will be bit 9 of Figure 10.

b. The last 2 sentences of 5.3.1 says that the TDC block for the 12-bit TWC and 64-bit Transmission Header contains seven 24-bit codewords, encoded as a 168-bit TDC block. 5.3.14.2 says that if the (12+64=76, plus a few inserted zeros) data bits do not divide into an integral number of 12-bit segments, fill bits of zeros are added to the end. Note that this does NOT require the PL to parse the Transmission Header, since the length of the Transmission Header is fixed at 64 bits (see Figure 9).

c. Reliable broadcast involves the need for stations to return an acknowledgment to the originator of messages that are received with only the global data link address (see 5.3.4.2.2.2.2.7) -- the broadcast address is used at higher protocol layers) -- and the receiving station is not individually addressed in the message. There is no requirement for reliable broadcast at the Intranet or Data Link layer.

d. Type 4 acknowledgments (DRR and DRNR are discussed in 5.3.7.3.5.3.1.2 and 5.3.7.3.5.2.3, respectively) may be transmitted twice. The second transmission of the DRR/DRNR should be concatenated with other data link frame transmissions. The DTE should not access the network merely to transmit the second DRR/DRNR.

e. When a station receives an out-of-sequence I frame (see 5.3.7.2.5.4) it may send either an REJ or SREJ, depending upon whether the station can perform resequencing. A station should send SREJ when it can resequence received I frames and should send REJ otherwise.

f. N4 (see 5.3.8.1.1.c) is the number of permitted re-transmissions. The number of times that a message may be transmitted is N4+1.

g. The following definition of Quiet Mode (see 5.3.11.2) will be used: When a station can not determine whether another station is in Quiet Mode, it should assume that the station

Downloaded from http://www.everyspec.com

is not in Quiet Mode. The fact that a station has entered Quiet Mode will be known globally over the Internet. While there is a possibility that some stations will not get the information, or will ignore the information; the protocol will not try to fix the problem. Specifically, there is no requirement for the last relayer to issue a proxy acknowledgment for stations that are operating in Quiet Mode.

6.3.4 Intranet layer. The following implementation details should be considered when implementing the DL of MIL-STD-188-220:

a. Relayers optionally may collapse the Intranet Header to remove addresses that are not on the path to or from the relaying node (see 5.4.1.1.7.5.1). The destination node would still have sufficient information to return an acknowledgment. Interoperability is not affected because the complete path between originator and destination is not corrupted. Collapsing the Intranet Header would minimize bandwidth utilization but would probably increase processing time at each relayer and could destroy information that might be useful to network management functions.

b. The source node will be included as the first entry in every Topology Update (see 5.4.1.2) sent by the INC. The Node Address and Node Predecessor will be set to the station ID (link address) of the source node. The Quiet and Non-relay Status bits will be set to that station's current status. The hop length field will be set to 0. The remaining entries in the Topology Update have no implied ordering. A node aware only of itself will generate an initial update containing just its own entry.

c. Topology Update messages (see 5.4.1.2) are broadcast unreliably.

d. In the Topology Update Data Structure (Figure 30), the "node address" and "node predecessor address" (see 5.4.1.2.3 and 5.4.1.2.5, respectively) have been implemented in the INC and the IDM in the following manner, for single octet addressing only:

Both of these addresses are "the link address of the node in the Intranet". The link address is seven bits long (see 5.3.4.2.2.1). As such, bits 0 through 6 contain the "link address" used in the node address and node predecessor address. Bit 7 will be zero. Note: The C/R bit and the extension bit associated with the link address will not be used in the Topology Update Data Structure.

e. Topology Update (see 5.4.1.2) and Topology Update Request messages (see 5.4.1.3) use Data Link Type 1, unacknowledged, procedures.

Downloaded from http://www.everyspec.com

f. The precedence of Topology Update (see 5.4.1.2) and Topology Update Request messages (see 5.4.1.3) is user defined.

g. Receiving a Topology Update Request (see 5.4.1.3) indicates an operational two-way (bi-directional) link.

h. It is possible for the Min_Update_Per parameter (see H.4.4.2) to take different values on a node-by-node basis within a net. There is essentially no problem unless one of the nodes takes the value 0. Assume node A has this value set to 0. Node A is not permitted to respond to topology requests. Nodes without traffic for this node issue topology update requests to try to set up links. Node A does not respond. Once a node (e.g. B) sets up a valid link with a link layer acknowledgment, a topology update listing this connection is advertised. All other nodes without a link will switch to a 2-hop path using node B as a relayer to node A. Therefore, it is logical that the Min_Update_Per value should be set on a network-wide basis. An alternative solution is available: The non-participant can announce this fact in a Topology Update message that identifies itself in the Node 1 Address field and the Node 1 Predecessor Address field and by setting the NR bit in the Node 1 Destination/Status Byte.

i. I.5.3 presents the solution to Source Directed Relay Example 3 as C-E-F-G-H-D. An equally valid solution is D-C-E-F-G-H.

6.3.5 CNR management process.

a. The CNR Management process is recommended to reduce operator burden by providing automated support for the management function.

b. There is no requirement to respond to an XNP Join Request message (see E.4.2.1). If operational conditions permit, an interval timer may be used to schedule the retransmission of an XNP Join Request message (see E.6.2).

6.3.6 Interoperation with internet protocols (IPs).

a. The Technical Architecture requires the IP protocol. Systems implementing Intranet message type 7 (MIL-STD-2045-47001 Header) will also implement Intranet message type 4 (IP Packet).

Downloaded from http://www.everyspec.com

b. Figure 4 of RFC 791 (Internet Protocol) is interpreted as having the LSB on the RIGHT. This means that the Internet Header Length (IHL) field will be transmitted before the Version Number by the MIL-STD-188-220 lower layers.

c. Message exchanges using this standard over CNR should be accomplished using User Datagram Protocol (UDP). Transmission Control Protocol (TCP) should be reserved for upper layer services that require Transport layer reliability.

d. The Internet Address Numbering Authority has assigned open shortest path first (OSPF) 2 interface Type Value 85 for CNR.

Downloaded from http://www.everyspec.com

APPENDIX A

ABBREVIATIONS AND ACRONYMS

A.1. General.

A.1.1 Scope. This appendix used to contain a list of abbreviations and acronyms pertinent to MIL-STD-188-220. The definitions are in section 3 of this standard. This appendix is left blank to maintain appendix conformity.

Downloaded from http://www.everyspec.com

APPENDIX B

DoD Standardized Profile Implementation Conformance Statements (DSPICS) Requirements List (DPRL)

B.1 General. This appendix provides the DoD Standardized Profile Implementation Conformance Statements (DSPICS) Requirements List (DPRL) for implementations of Combat Net Radios. An implementation's completed DPRL is called the DSPICS. The DSPICS states which capabilities and options had been implemented.

The main part of this appendix is a fixed-format questionnaire divided into a number of major subclauses; these can be divided into further subclauses each containing a group of individual items. Answers to the questionnaire items are to be provided in the Support column by simply marking an answer (i.e., by checking the applicable entry) to indicate a restricted choice (Yes or No) or by entering a value or a set of range of values.

The structure of the DSPICS questionnaire consists of 3 main sections:

(1) Physical Layer
(2) Data Link Layer
(3) Network Layer [Intranet and Subnetwork Dependent Convergence Function (SNDCF)]

An item identification number in the first column identifies each item. The second column contains the statement of function or the question to be answered. The third column contains the reference to the material that specifies the item in the main body of the standard. The next two columns record the status of the item – whether support is mandatory, optional, prohibited or conditional – and provide the space for answers. The last column is used to list comments by their numerical endnote designator.

An implementer shows the extent of compliance by completing the DPRL. That is, compliance to all mandatory requirements and the options that are not supported are shown. The resulting completed DPRL is called a DSPICS. If a conditional requirement is inapplicable, use the No choice. If a mandatory requirement is not satisfied, exception information must be supplied by entering a reference Xi in the Notes column, where i is a unique identifier, to an accompanying rationale for the noncompliance.

B.1.1 Scope. This appendix contains the minimum set of MIL-STD-188-220 features required for joint interoperability. It is intended to guide system developers and users. The following can use the DSPICS:

(a) the protocol implementer, as a checklist to reduce the risk of failure to conform to the standard through oversight

Downloaded from http://www.everyspec.com

(b) the supplier and acquirer or potential acquirer of the implementation, as a detailed indication of the capabilities of the implementation, stated relative to the common basis for understanding provided by the standard DSPICS proforma

(c) the user or potential user of the implementation, as a basis for initially checking the possibility of the interworking with another implementation (note that, while interworking can never be guaranteed, failure to interwork can often be predicted from incompatible DSPICSs)

(d) a protocol tester, as the basis for selecting appropriate tests against which to assess the claim for conformance of the implementation

B.1.2 Application. This appendix is a mandatory part of MIL-STD-188-220. This information contained herein is intended for compliance. The DSPICS will take precedence over the standard.

B.2 Applicable documents. None.

B.3 Notation. The following notations and symbols are used in the DPRL to indicate the status of features:

Status Symbols

M	- mandatory
M.<n>	- support of every item of the group labeled by the same numeral <n> required, but only one is active at a time
O	- optional
O.<n>	- optional, <n> is the number of optional selections
P	- item number
P:O.<n>	- parent item number of this option and number of options related to the parent when there is more than one
C	- conditional
-	- non-applicable (i.e. logically impossible in the scope of the profile)
X	- excluded or prohibited
i	- out of scope of profile (left as an implementation choice)

In addition, the symbol "•" is used to indicate an option whose status is not constrained by the profile (status in the base standard). The O.<n> notation is used to show a set of selectable options (i.e., one or more of the set must be implemented) with the same identifier <n>.

Downloaded from http://www.everyspec.com

APPENDIX B

Notations for Conditional Status

The following predicate notations are used:

<predicate>:: This notation introduces a group of items, all of which are conditional on <predicate>.
<predicate>: This notation introduces a single item, which is conditional on <predicate>.

In each case, the predicate may identify a profile feature, or a Boolean combination of predicates. ("^" is the symbol for logical negation.)

<index>:	This predicate symbol means that the status following it applies only when the DSPICS states that the features identified by the index are supported. In the simplest case, <index> is the identifying tag of a single DSPICS item. The symbol <index> also may be a Boolean expression composed of several indices.
<index>::	When this group predicate is true, the associated clause should be completed.

Support Column Symbols

The support of every item as claimed by the implementer is stated by checking the appropriate answer (Yes or No) in the support column:

Yes	Supported by the implementation
No	Not supported by the implementation
-	Not applicable

B.4 Implementation requirements. MIL-STD-188-220 requirements are described in Section 5 and Appendices B, C, D, E, F, G, H, I, J, K and L. This appendix categorizes requirements, identified by MIL-STD-188-220 paragraph numbers, as Mandatory, Conditional or Optional. Unless otherwise specified, the category assigned to a requirement applies to all subordinate subparagraphs for the requirement. Fully compliant systems shall implement all mandatory and conditional requirements. Minimally compliant systems shall implement all mandatory requirements and some conditional requirements as described in this appendix.

B.5 Detailed Requirements.

B.5.1 Physical Layer

Downloaded from http://www.everyspec.com

APPENDIX B

ANNEX A (normative)

A.1 MIL-STD-188-220C Profile Protocol Stack

MIL-STD-188-220C Layers	Base Standard
INTRANET LAYER	5.4
DATA LINK LAYER	5.3
PHYSICAL LAYER	5.1 & 5.2

A.2 Implementation Identification

Supplier	
Contact point for queries about the DSPICS	
Implementation Name(s) and Version(s)	
Other information necessary for full identification (e.g. name(s) and version(s) of machines and/or operating systems, system name(s))	

A.2.1 Protocol Summary

Identification of Protocol Specification	Military Standard, Interoperability Standard for Digital Message Transfer Device Subsystems, MIL-STD-188-220C.
Identification of amendments and corrigenda to the DSPICS Proforma	Military Standard, Interoperability Standard for Digital Message Transfer Device Subsystems, MIL-STD-188-220C. Am.: Corr.: Am.: Corr.: Am.: Corr.: Am.: Corr.: Am.: Corr.:
Protocol Version(s) supported	
Date of Statement	

Downloaded from http://www.everyspec.com

APPENDIX B

A.3 CNR Requirements List

The following tables give the DPRL for the MIL-STD-188-220 Intranet Layer, Data Link Layer and Physical Layer. The support column describes the implementation.

A.3.1 Basic Requirements

Item (series)	Protocol Feature	Reference	Status	Support	Notes
100	Physical Layer	5.1 and 5.2	M	Yes__ No__	
200	Data Link Layer	5.3	M	Yes__ No__	
300	Network Layer	5.4	M	Yes__ No__	
301	Intranet Layer Protocol	5.4.1	M	Yes__ No__	
302	Subnetwork Dependent Convergence Function (SNDCF)	5.4.2	M	Yes__ No__	

A.4 Physical Layer DPRL

Item	Protocol Feature	Reference	Status	Support	Notes
100	Physical Layer	5.1	M	Yes__ No__	
100.a	The physical layer (PL) shall provide the control functions required to activate, maintain, and deactivate the connections between communications systems	5.1	M	Yes__ No__	
101	Transmission Channel Interfaces	5.1.1 and Appendix L	M	Yes__ No__	
102	Physical Layer Protocol	5.2	M	Yes__ No__	

A.4.1 Transmission Channel Interfaces

Item	Protocol Feature	Reference	Status	Support	Notes
101	Transmission Channel Interfaces	5.1.1 and Appendix L	M	Yes__ No__	

Downloaded from http://www.everyspec.com

A.4.2 Physical Layer Protocol

Item	Protocol Feature	Reference	Status	Support	Notes
102	Physical Layer Protocol	5.2	M	Yes__ No__	
102.1	Physical Layer PDU	5.2.1	M	Yes__ No__	
102.1.a	The transmission frame shall be the basic PDU of the PL	5.2.1	M	Yes__ No__	
102.1.1	Communication Security Preamble and Postamble	5.2.1.1	O	Yes__ No__	
102.1.1.a	COMSEC preamble field shall be used to achieve cryptographic synchronization over the link	5.2.1.1	102.1.1:M	Yes__ No__	
102.1.1.b	COMSEC postamble field shall be used to provide an end-of-transmission flag to the COMSEC equipment at the receiving station	5.2.1.1	102.1.1:M	Yes__ No__	
102.1.2	Phasing	5.2.1.2	O	Yes__ No__	
102.1.2.a	Phasing shall be a string of alternating ones and zeros, beginning with a one, sent by DTE	5.2.1.2	102.1.2:M	Yes__ No__	
102.1.2.b	For Packet Mode interfaces, the length of this field shall be 0 (zero)	5.2.1.2	412.1.1.6:M	Yes__ No__	
102.1.3	Transmission Synchronization Field	5.2.1.3	M	Yes__ No__	
102.1.3.1	Asynchronous Mode Transmission Synchronization Field	5.2.1.3.1	O	Yes__ No__	
102.1.3.1.1	Frame Synchronization subfield	5.2.1.3.1.1	102.1.3.1:M	Yes__ No__	
102.1.3.1.1.a	Frame synchronization subfield shall consist of one-of-two fixed 64-bit synchronization pattern	5.2.1.3.1.1	102.1.3.1:M	Yes__ No__	
102.1.3.1.1.b	The receiver shall correlate for the frame synchronization pattern	5.2.1.3.1.1	102.1.3.1:M	Yes__ No__	
102.1.3.1.1.c	A pattern shall be detected if 13 or fewer bits are in error with non-inverted or inverted data	5.2.1.3.1.1	102.1.3.1:M	Yes__ No__	

Downloaded from http://www.everyspec.com

APPENDIX B

Item	Protocol Feature	Reference	Status	Support	Notes
102.1.3.1.1.d	If the correlation detects an inverted synchronization pattern, all received data shall be inverted before any other received processing is performed	5.2.1.3.1.1	102.1.3.1:M	Yes__ No__	
102.1.3.1.1.e	If the frame synchronization subfield is detected before the robust frame synchronization subfield, the receiver shall assume the optional robust processing is not requested for this transmission	5.2.1.3.1.1	102.1.3.1:M	Yes__ No__	
102.1.3.1.1.f	If the robust frame synchronization pattern is detected, the robust frame format subfield shall be decoded to determine what physical level processing is required for data reception	5.2.1.3.1.1	102.1.3.1:M	Yes__ No__	
102.1.3.1.1.g	If the robust frame synchronization pattern is used, the frame synchronization pattern shall not be used	5.2.1.3.1.1	102.1.3.1:M	Yes__ No__	
102.1.3.1.2	Robust Frame Format subfield	5.2.1.3.1.2	102.1.3.1:O	Yes__ No__	
102.1.3.1.2.a	The robust frame format subfield shall be formatted with multi-dwell majority vote 3 out of 5 BCH (15,7) coding and no scrambling or convolutional encoding	5.2.1.3.1.2	102.1.3.1.2: M	Yes__ No__	
102.1.3.1.3	Message Indicator	5.2.1.3.1.3	O	Yes__ No__	
102.1.3.1.4	TWC subfield	5.2.1.3.1.4	102.1.3.1:M	Yes__ No__	
102.1.3.1.4.a	The TWC calculation shall include the length of the TWC and data field	5.2.1.3.1.4	102.1.3.1.4: M	Yes__ No__	

Downloaded from http://www.everyspec.com

APPENDIX B

Item	Protocol Feature	Reference	Status	Support	Notes
102.1.3.1.4.b	If the number of bits in the data field will not be evenly divisible by 16, the word count shall be rounded to the next higher integer and a variable number of zeros, 0 to 15, shall be appended after the final link layer frame in order to make the Transmission Unit an integral number of 16-bit words	5.2.1.3.1.4	102.1.3.1.4: M	Yes__ No__	
102.1.3.1.4.c	These zeros shall not be subject to FEC or TDC	5.2.1.3.1.4 and G.3.7.1.3	102.1.3.1.4: M	Yes__ No__	
102.1.3.2	Synchronous Mode Transmission Synchronization Field	5.2.1.3.2	M	Yes__ No__	
102.1.3.2.1	Frame Synchronization subfield	5.2.1.3.2.1 and 5.2.1.3.1.1	M	Yes__ No__	
102.1.3.2.2	Robust Frame Format subfield	5.2.1.3.2.2 and 5.2.1.3.1.2	O	Yes__ No__	
102.1.3.2.3	Message Indicator	5.2.1.3.2.3 and 5.2.1.3.1.3	O	Yes__ No__	
102.1.3.2.4	TWC subfield	5.2.1.3.2.4 and 5.2.1.3.1.4	M	Yes__ No__	
102.1.3.3	Packet Mode Transmission Synchronization Field	5.2.1.3.3	O	Yes__ No__	
102.1.3.3.a	When a DTE has data to send to the radio (DCE) it shall transmit flags on the 'T' lead until flags are received from the radio (DCE) on the 'R' lead, then data shall be sent to the radio (DCE) on the 'T' lead	5.2.1.3.3	102.1.3.3:M	Yes__ No__	
102.1.3.3.b	A variable number (at least one) of lead flags shall be transmitted prior to the actual data	5.2.1.3.3	102.1.3.3:M	Yes__ No__	
102.1.3.3.c	On the receive side, the radio (DCE) shall send at least one flag prior to the data it sends to the DTE	5.2.1.3.3	102.1.3.3:M	Yes__ No__	
102.1.3.4	Multi-dwell Protocol	5.2.1.3.4	O	Yes__ No__	

Downloaded from http://www.everyspec.com

APPENDIX B

Item	Protocol Feature	Reference	Status	Support	Notes
102.1.3.4.a	The PL shall use the data length information to determine the most efficient multi-dwell parameters to use for data transmission.	5.2.1.3.4	102.1.3.4:M	Yes__ No__	
102.1.4	Data field	5.2.1.4	M	Yes__ No__	
102.1.4.a	The data field shall contain the string of bits, comprising the Transmission Header and concatenated data link frames, created by the data link layer following the procedures for framing, zero bit insertion, concatenation, FEC, TDC, and scrambling.	5.2.1.4	M	Yes__ No__	
102.1.5	Bit Synchronization field	5.2.1.5	102.1.3.1:O	Yes__ No__	
102.1.5.a	This field shall be used to provide the receiver a signal for re-establishing bit synchronization	5.2.1.5	102.1.5:M	Yes__ No__	
102.1.5.b	The bit synchronization field shall be a 64-bit pattern that consists of alternating ones and zeros, beginning with a one.	5.2.1.5	102.1.5 and 209.4:M	Yes__ No__	
102.2	NAC related indications	5.2.2	M	Yes__ No__	
102.2.a	Upon detection of a net busy, the net busy indicator shall be set	5.2.2	M	Yes__ No__	
102.2.b	The net busy sensing indicator shall be reset when neither digital data nor voice is detected by the net busy sensing function	5.2.2 and C.4.1	M	Yes__ No__	
102.3	PL to upper layer interactions	5.2.3	M	Yes__ No__	
102.3.a	PL-Unitdata Request data/data length	5.2.3.a	102.3:O	Yes__ No__	
102.3.b	PL-Unitdata Indication data/data length	5.2.3.b	102.3:O	Yes__ No__	
102.3.c	PL-Status Indication net activity	5.2.3.c	102.3:O	Yes__ No__	

Downloaded from http://www.everyspec.com

APPENDIX B

A.5 Data Link Layer DPRL

Item	Protocol Feature	Reference	Status	Support	Notes
200	Data Link Layer	5.3	M	Yes__ No__	
200.a	The data link layer shall provide the control functions to ensure the transfer of information over established physical paths, to provide framing requirements for data, and to provide for error control	5.3	M	Yes__ No__	
201	Transmission Header	5.3.1	M	Yes__ No__	
202	Net Access Control (NAC)	5.3.2	M	Yes__ No__	
203	Types of Procedures	5.3.3	M	Yes__ No__	
204	Data Link Frame	5.3.4	M	Yes__ No__	
205	Operational Parameters	5.3.5	M	Yes__ No__	
206	Commands and Responses	5.3.6	M	Yes__ No__	
207	Description of Procedures by Type	5.3.7	M	Yes__ No__	
208	Data Link Initialization	5.3.8	M	Yes__ No__	
209	Frame Transfer	5.3.9	M	Yes__ No__	
210	Flow Control	5.3.10	M	Yes__ No__	
211	Acknowledgement and Response	5.3.11	M	Yes__ No__	
212	Invalid Frame	5.3.12	M	Yes__ No__	
213	Retransmission	5.3.13	M	Yes__ No__	
214	Error Detection and Correction (not used in packet mode)	5.3.14	102.1.3.1:M 102.1.3.2:M 102.1.3.3:X	Yes__ No__ Yes__ No__ No	
215	Data Scrambling (not used in packet mode)	5.3.15	O	Yes__ No__	
216	Data Link Layer Interactions	5.3.16	O	Yes__ No__	

Downloaded from http://www.everyspec.com

APPENDIX B

A.5.1 Transmission Header

Item	Protocol Feature	Reference	Status	Support	Notes
201	Transmission Header	5.3.1	M	Yes__ No__	
201.a	The TWC, MI and Transmission Header shall have Golay FEC applied when operating in the Asynchronous and Synchronous modes	5.3.1	M	Yes__ No__	
201.b	TDC (7x24) bit interleaving shall be applied in unison with the FEC on the TWC and Transmission Header	5.3.1	M	Yes__ No__	
201.c	The data shall be formatted into a TDC block composed of seven (7) 24-bit Golay (24,12) codewords in a manner analogous to 5.3.14.3	5.3.1 and 5.3.14.3	M	Yes__ No__	
201.1	Selection Bits	5.3.1.1	M	Yes__ No__	
201.1.a	Scrambling, if used, shall be applied before any FEC and TDC is applied. FEC, TDC and scrambling are not applied when the Packet Mode Interface described in L.4.1.6 is used at the PL.	5.3.1.1	102.1.3.1:O 102.1.3.2:O 102.1.3.3:X	Yes__ No__ Yes__ No__ No	
201.2	Topology Update Identifier	5.3.1.2	M	Yes__ No__	
201.2.a	This subfield shall contain the least significant three bits of the Topology Update ID used in the most recent Topology Update message	5.3.1.2 and 5.4.1.2	M	Yes__ No__	
201.2.b	If no Topology Update messages have been sent, this subfield shall be all zeros	5.3.1.2	M	Yes__ No__	
201.3	Transmission Queue Field	5.3.1.3	M	Yes__ No__	
201.3.1	T-bits	5.3.1.3.1	M	Yes__ No__	
201.3.1.a	If the T-bits are “00”, the transmission queue subfield does not contain information and is ignored	5.3.1.3.1	M	Yes__ No__	

Downloaded from http://www.everyspec.com

APPENDIX B

Item	Protocol Feature	Reference	Status	Support	Notes
201.3.1.b	If the T-bits are “01”, the transmission queue subfield is used in conjunction with RE-NAD.	5.3.1.3.1	202.4.4:M	Yes__ No__	
201.3.1.c	If the T-bits are “10”, the transmission queue subfield is used in conjunction with DAP-NAD.	5.3.1.3.1	202.4.5:M	Yes__ No__	
201.3.1.d	If the T-bits are “11”, this bit sequence is invalid and shall be ignored. Data link frame(s) after this header shall be processed normally.	5.3.1.3.1	M	Yes__ No__	
201.3.2	Queue Precedence	5.3.1.3.2	202.4.4:M	Yes__ No__	
201.3.3	Queue Length	5.3.1.3.3	202.4.4:M	Yes__ No__	
201.3.4	Data link Precedence	5.3.1.3.4	202.4.5:M	Yes__ No__	
201.3.4.a	It shall contain the value 0 if an urgent message is in the frame, 1 if a priority but no urgent message is in the frame and 2 if neither an urgent nor priority message is in the frame	5.3.1.3.4	201.3.4:M	Yes__ No__	
201.3.4.b	Undefined precedence values shall be handled as routine	5.3.1.3.4	201.3.4:M	Yes__ No__	
201.3.5	First Subscriber Number	5.3.1.3.5	202.4.5:M	Yes__ No__	
201.4	Flag Sequence	5.3.4.2.1	M	Yes__ No__	
201.5	Frame Check Sequence	5.3.4.2.5	M	Yes__ No__	

A.5.2 Net Access Control (NAC)

Item	Protocol Feature	Reference	Status	Support	Notes
202	NAC	5.3.2	M	Yes__ No__	

Downloaded from http://www.everyspec.com

APPENDIX B

Item	Protocol Feature	Reference	Status	Support	Notes
202.a	As a minimum, DAP-NAD and R-NAD shall be available to regulate transmission opportunities for all participants when the network is operating in Synchronous Mode.	5.3.2	M	Yes__ No__	
202.1	Network Busy Sensing Function	Appendix C	M	Yes__ No__	
202.2	Response Hold Delay (RHD)	Appendix C	M	Yes__ No__	
202.3	Timeout Period (TP)	Appendix C	M	Yes__ No__	
202.4	NAD	Appendix C	M	Yes__ No__	
202.4.1	R-NAD	Appendix C	M	Yes__ No__	
202.4.2	P-NAD	Appendix C	O	Yes__ No__	
202.4.3	H-NAD	Appendix C	O	Yes__ No__	
202.4.4	RE-NAD	Appendix C	O	Yes__ No__	
202.4.5	DAP-NAD	Appendix C	102.1.3.2:M	Yes__ No__	
202.5	Scheduler	5.3.2.1, C.4.4.4.1.1, C.4.4.4.1.5 and C.4.4.4.1.6	202.4.4:M	Yes__ No__	
202.5.a	When a station has data to transmit, it shall calculate the scheduler timer as indicated in Appendix C	5.3.2.1 and C.4.4.4.1	202.5:M	Yes__ No__	
202.5.b	When this timer expires, the link layer shall first determine that the previous frame concatenation was transmitted by the PL	5.3.2.1	202.5:M	Yes__ No__	
202.5.c	If the frame concatenation was not transmitted, the link layer shall request its transmission	5.3.2.1	202.5:M	Yes__ No__	
202.5.d	If a higher precedence individual frame becomes available for transmission, the concatenated frames shall be re-built to include the higher precedence frame	5.3.2.1	202.5:M	Yes__ No__	

Downloaded from http://www.everyspec.com

Item	Protocol Feature	Reference	Status	Support	Notes
202.5.e	If the previous frame concatenation was transmitted, the link layer shall build a new frame concatenation. This frame concatenation shall then be passed to the PL for transmission	5.3.2.1	202.5:M	Yes__ No__	

A.5.3 Types of Procedures

Item	Protocol Feature	Reference	Status	Support	Notes
203	Types of Procedures	5.3.3	M	Yes__ No__	
203.1	Type 1 Operation (unacknowledged connectionless)	5.3.3.1 and 5.3.3.3	M	Yes__ No__	
203.2	Type 2 Operation (connection-mode)	5.3.3.2	O	Yes__ No__	
203.2.a	With Type 2 operation, a data link connection shall be established between two systems prior to any exchange of information bearing PDUs	5.3.3.2	203.2:M	Yes__ No__	
203.2.b	The connection normally shall remain open until a station leaves the net	5.3.3.2	203.2:M	Yes__ No__	
203.2.c	The normal communications cycle between Type 2 systems shall consist of transferring PDUs from the source to the destination, and acknowledging receipt of these PDUs in the opposite direction	5.3.3.2	203.2:M	Yes__ No__	
203.3	Type 3 Operation (acknowledged connectionless)	5.3.3.3 and 5.3.3.1	M	Yes__ No__	
203.4	Type 4 Operation (decoupled acknowledged connectionless)	5.3.3.4	O	Yes__ No__	
203.5	Station Class	5.3.3.5	M	Yes__ No__	
203.5.a	Class A	5.3.3.5	203.5:O.<4>	Yes__ No__	
203.5.b	Class B	5.3.3.5	203.5:O.<4>	Yes__ No__	
203.5.c	Class C	5.3.3.5	203.5:O.<4>	Yes__ No__	
203.5.d	Class D	5.3.3.5	203.5:O.<4>	Yes__ No__	

Downloaded from http://www.everyspec.com

A.5.4 Data Link Frame

Item	Protocol Feature	Reference	Status	Support	Notes
204	Data Link Frame	5.3.4	M	Yes__ No__	
204.a	The data link frame shall be the basic PDU of the link layer	5.3.4	M	Yes__ No__	
204.1	Types of Frames	5.3.4.1	M	Yes__ No__	
204.1.1	Unnumbered Frame (U-PDU) Type 1 operations Type 2 operations Type 4 operations	5.3.4.1.1	 203.1:M 203.3:M 203.2:M 203.4:M	 Yes__ No__ Yes__ No__ Yes__ No__ Yes__ No__	
204.1.2	Information Frame (I-PDU) Type 1 operations Type 2 operations Type 4 operations	5.3.4.1.2	 X 203.2:M X	 No Yes__ No__ No	
204.1.3	Supervisory Frame (S-PDU) Type 1 operations Type 2 operations Type 4 operations	5.3.4.1.3	 X 203.2:M 203.4:M	 No Yes__ No__ Yes__ No__	
204.2	Data Link Frame Structure	5.3.4.2	M	Yes__ No__	
204.2.a	The basic elements of the data link frame shall be the opening flag sequence, the address field, the control field, the information field, the FCS, and the closing flag sequence	5.3.4.2	M	Yes__ No__	
204.2.b	Each Type 1, Type 2 and Type 4 data link frame shall be structured as shown in the data link frame portion of Figure 11	5.3.4.2	M	Yes__ No__	
204.2.1	Flag Sequence	5.3.4.2.1	M	Yes__ No__	
204.2.1.a	All frames shall start and end with the 8-bit flag sequence of one 0 bit, six 1 bits, and one 0 bit (01111110)	5.3.4.2.1	M	Yes__ No__	
204.2.1.b	The flag shall be used for data link frame synchronization	5.3.4.2.1	M	Yes__ No__	

Downloaded from http://www.everyspec.com

APPENDIX B

Item	Protocol Feature	Reference	Status	Support	Notes
204.2.2	Address Fields	5.3.4.2.2	M	Yes__ No__	
204.2.2.a	These fields shall identify the link addresses of the source and destinations	5.3.4.2.2	M	Yes__ No__	
204.2.2.1	Address Format	5.3.4.2.2.1	M	Yes__ No__	
204.2.2.1.a	Single octet addressing shall be mandatory and four octet addressing is optional for synchronous, asynchronous, and packet modes of operation.	5.3.4.2.2.1	M	Yes__ No__	
204.2.2.1.b	Single octet and four octets shall not be mixed in the same net.	5.3.4.2.2.1	M	Yes__ No__	
204.2.2.1.1	Single Octet Addressing	5.3.4.2.2.1.1	M	Yes__ No__	
204.2.2.1.1.a	Each address in the address fields shall consist of a single octet	5.3.4.2.2.1.1	M	Yes__ No__	
204.2.2.1.1.b	The source address octet shall consist of a command/response (C/R) designation bit (the LSB) followed by a 7-bit address representing the source	5.3.4.2.2.1.1	M	Yes__ No__	
204.2.2.1.1.c	Each destination octet shall consist of an extension bit (the LSB) followed by the 7-bit destination address. The destination address uses a modification of the HDLC extended addressing format	5.3.4.2.2.1.1	M	Yes__ No__	
204.2.2.1.1.d	The destination address shall be extended by setting the extension bit of a destination address octet to 0, indicating that the following octet is another destination address	5.3.4.2.2.1.1	M	Yes__ No__	
204.2.2.1.1.e	The destination address field shall be terminated by an octet that has the extension bit set to 1	5.3.4.2.2.1.1	M	Yes__ No__	

Downloaded from http://www.everyspec.com

APPENDIX B

Item	Protocol Feature	Reference	Status	Support	Notes
204.2.2.1.1.f	The destination address field shall be extendible from 1 address octet to 16 address octets	5.3.4.2.2.1.1	M	Yes__ No__	
204.2.2.1.1.g	The format of the address fields shall be in the extended address field format	5.3.4.2.2.1.1	M	Yes__ No__	
204.2.2.1.2	Four Octets Addressing	5.3.4.2.2.1.2	O	Yes__ No__	
204.2.2.1.2.a	Each address in the address fields shall consist of four octets, except for special, global multicast and group multicast addresses which are a single octet	5.3.4.2.2.1.2	204.2.2.1.2: M	Yes__ No__	
204.2.2.1.2.b	The four octets of address space shall be preceded by a single octet 32-bit marker subfield	5.3.4.2.2.1.2	204.2.2.1.2: M	Yes__ No__	
204.2.2.1.2.c	In the source address field the 32-bit marker subfield shall consist of a command/response (C/R) designation bit (the LSB) followed by a 7-bit value=126	5.3.4.2.2.1.2	204.2.2.1.2: M	Yes__ No__	
204.2.2.1.2.d	In the destination address field the 32-bit marker subfield shall consist of an extension bit (the LSB) followed by the 7-bit value=126	5.3.4.2.2.1.2	204.2.2.1.2: M	Yes__ No__	
204.2.2.1.2.e	The destination address field shall be extended by setting the extension bit of the 32-bit marker subfield of a destination address octet to 0. This subsequent address may be formatted in either four octets or a single octet (i.e. special, group multicast or global multicast).	5.3.4.2.2.1.2	204.2.2.1.2: M	Yes__ No__	

Downloaded from http://www.everyspec.com

APPENDIX B

Item	Protocol Feature	Reference	Status	Support	Notes
204.2.2.1.2.f	The destination address field shall be terminated by an octet (either a valid address or the 32-bit marker subfield) that has the extension bit set to 1	5.3.4.2.2.1.2	204.2.2.1.2: M	Yes__ No__	
204.2.2.1.2.g	The destination address field shall be extendible from 1 address to 16 addresses	5.3.4.2.2.1.2	204.2.2.1.2: M	Yes__ No__	
204.2.2.2	Addressing Convention	5.3.4.2.2.2	M	Yes__ No__	
204.2.2.2.a	The following addressing conventions shall be implemented in the 7 address bits of each address octet or 32-bit marker octet	5.3.4.2.2.2	M	Yes__ No__	
204.2.2.2.1	Source and Destination	5.3.4.2.2.2.1	M	Yes__ No__	
204.2.2.2.1.1	Source Address	5.3.4.2.2.2.1.1	M	Yes__ No__	
204.2.2.2.1.1.a	The C/R designation bit shall be set to 0 for commands and 1 for responses.	5.3.4.2.2.2.1.1	M	Yes__ No__	
204.2.2.2.1.2	Destination Address(es)	5.3.4.2.2.2.1.2	M	Yes__ No__	
204.2.2.2.2	Types of Addresses	5.3.4.2.2.2.2	M	Yes__ No__	
204.2.2.2.2.1	Reserved Address	5.3.4.2.2.2.2.1	M	Yes__ No__	
204.2.2.2.2.1.a	A station receiving a value of 0 in the destination address field shall ignore the address and continue processing any remaining addresses	5.3.4.2.2.2.2.1	M	Yes__ No__	
204.2.2.2.2.2	Special Addresses	5.3.4.2.2.2.2.2	Send: O / Recv: M	Send: Yes__ No__ / Recv: Yes__ No__	
204.2.2.2.2.3	32-bit Marker Subfield	5.3.4.2.2.2.2.3	204.2.2.1.2: M	Yes__ No__	
204.2.2.2.2.4	Individual Addresses	5.3.4.2.2.2.2.4	M	Yes__ No__	

Downloaded from http://www.everyspec.com

APPENDIX B

Item	Protocol Feature	Reference	Status		Support		Notes
204.2.2.2.2.4.a	Individual single octet addresses shall be assigned within the address range 4 to 95	5.3.4.2.2.2.2.4	M		Yes__ No__		
204.2.2.2.2.4.b	Individual four octets addresses shall be assigned within the address range 128 to 2^{32}-1 (0.0.0.128 to 255.255.255.255 in dot notation)	5.3.4.2.2.2.2.4	M		Yes__ No__		
204.2.2.2.2.4.c	Stations shall be capable of sending and receiving 1 to 16 individual destination addresses in a single data link frame	5.3.4.2.2.2.2.4	M		Yes__ No__		
204.2.2.2.2.4.d	Sending stations shall use any individual address just once in a data link frame	5.3.4.2.2.2.2.4	M		Yes__ No__		
204.2.2.2.2.4.e	When individual address(es) are present, a receiving station shall receive all addresses, search for its unique individual address, and follow the media access procedures described in Appendix C	5.3.4.2.2.2.2.4 and Appendix C	M		Yes__ No__		
204.2.2.2.2.5	Group Multicast Addresses	5.3.4.2.2.2.2.5	Send: O	Recv: M	Send: Yes__ No__	Recv: Yes__ No__	
204.2.2.2.2.5.a	The valid address range shall be 96 to 125	5.3.4.2.2.2.2.5	Send: O	Recv: M	Send: Yes__ No__	Recv: Yes__ No__	
204.2.2.2.2.5.b	While the use of link group multicast addresses is optional, all stations shall be capable of recognizing received group addresses	5.3.4.2.2.2.2.5	Send: O	Recv: M	Send: Yes__ No__	Recv: Yes__ No__	

Downloaded from http://www.everyspec.com

APPENDIX B

Item	Protocol Feature	Reference	Status		Support		Notes
204.2.2.2.2.5.c	If a receiving station does not implement group addressing procedures, it shall still process all received addresses, but ignore the group addresses (that is, recognize range 96 to 125 as group addresses)	5.3.4.2.2.2.2.5	Send: O	Recv: M	Send: Yes__ No__	Recv: Yes__ No__	
204.2.2.2.2.5.d	When group addressing is implemented, a station shall be capable of sending and receiving 1 to 16 destination group addresses	5.3.4.2.2.2.2.5	Send: O	Recv: M	Send: Yes__ No__	Recv: Yes__ No__	
204.2.2.2.2.5.e	Coupled data link acknowledgement of group multicast addresses using the F-bit shall not be allowed	5.3.4.2.2.2.2.5	Send: O	Recv: M	Send: Yes__ No__	Recv: Yes__ No__	
204.2.2.2.2.5.f	An uncoupled TEST response PDU with its F-bit set to zero shall be sent in response to a TEST command PDU addressed to a group multicast address when the receiving station is a member of the specified group	5.3.4.2.2.2.2.5	Send: O	Recv: M	Send: Yes__ No__	Recv: Yes__ No__	
204.2.2.2.2.6	Individual, Special and Multicast Addresses Mixed	5.3.4.2.2.2.2.6	Send: 204.2.2.2.2.4:M	Recv: M	Send: Yes__ No__	Recv: Yes__ No__	
204.2.2.2.2.6.a	A station that optionally implements multicast (group and global) addressing shall also be capable of sending and receiving multicast, special and individual addresses “mixed” in a destination address subfield	5.3.4.2.2.2.2.6	Send: 204.2.2.2.2.4:M	Recv: M	Send: Yes__ No__	Recv: Yes__ No__	
204.2.2.2.2.6.b	All stations shall be capable of receiving mixed addresses	5.3.4.2.2.2.2.6	Send: 204.2.2.2.2.4:M	Recv: M	Send: Yes__ No__	Recv: Yes__ No__	

Downloaded from http://www.everyspec.com

APPENDIX B

Item	Protocol Feature	Reference	Status		Support		Notes
204.2.2.2.2.6.c	The reception and acknowledgement procedures shall be valid even for stations that do not implement multicast addressing procedures	5.3.4.2.2.2.2.6	Send: 204.2.2.2.4:M	Recv: M	Send: Yes__ No__	Recv: Yes__ No__	
204.2.2.2.2.6.d	The total number of destination addresses shall not exceed 16	5.3.4.2.2.2.2.6.a	Send: 204.2.2.2.4:M	Recv: M	Send: Yes__ No__	Recv: Yes__ No__	
204.2.2.2.2.6.e	All individual and special addresses shall precede multicast addresses	5.3.4.2.2.2.2.6.c	Send: 204.2.2.2.4:M	Recv: M	Send: Yes__ No__	Recv: Yes__ No__	
204.2.2.2.2.6.f	The special address 3, if used, shall follow all individual, reserved, and other special addresses	5.3.4.2.2.2.2.6.d	Send: 204.2.2.2.4:M	Recv: M	Send: Yes__ No__	Recv: Yes__ No__	
204.2.2.2.2.6.g	The special address 3, if used, may precede group or global addresses, but shall not precede individual, reserved or other special addresses	5.3.4.2.2.2.2.6.d	Send: 204.2.2.2.4:M	Recv: M	Send: Yes__ No__	Recv: Yes__ No__	
204.2.2.2.2.6.h	Only one type of multicast (group or global) shall be mixed in a destination address subfield	5.3.4.2.2.2.2.6.e	Send: 204.2.2.2.4:M	Recv: M	Send: Yes__ No__	Recv: Yes__ No__	
204.2.2.2.2.6.i	If multicast, special and individual addresses are mixed, only the individual and special addresses shall be acknowledged when indicated	5.3.4.2.2.2.2.6.f	Send: 204.2.2.2.4:M	Recv: M	Send: Yes__ No__	Recv: Yes__ No__	
204.2.2.2.2.6.j	Multicast addresses shall not be acknowledged but a data link response (using a TEST Response PDU) is allowed in the case where a TEST message is received with a multicast address in the destination field and the poll bit is set to 0	5.3.4.2.2.2.2.6.g	Send: 204.2.2.2.4:M	Recv: M	Send: Yes__ No__	Recv: Yes__ No__	

Downloaded from http://www.everyspec.com

APPENDIX B

Item	Protocol Feature	Reference	Status		Support		Notes
204.2.2.2.2.6.k	A station that optionally implements multicast (group and global) addressing shall also be capable of sending and receiving multicast, special and individual addresses "mixed" in a destination subfield	5.3.4.2.2.2.2.6.h	Send: 204.2.2.2.4:M	Recv: M	Send: Yes__ No__	Recv: Yes__ No__	
204.2.2.2.2.7	Global Multicast Addressing	5.3.4.2.2.2.2.7	M		Yes__ No__		
204.2.2.2.2.7.a	Global multicast addressing, used when broadcasting messages to all systems on a broadcast subnetwork, shall be implemented through the unique bit pattern 1111111 (127)	5.3.4.2.2.2.2.7	M		Yes__ No__		
204.2.2.2.2.7.b	This global multicast address shall be used to indicate broadcasting in single octet format and four octets format of addressing	5.3.4.2.2.2.2.7	M		Yes__ No__		
204.2.2.2.2.7.c	If the global address is used, it shall be the only multicast destination address, but individual addresses are allowed with the global address	5.3.4.2.2.2.2.7	M		Yes__ No__		
204.2.2.2.2.7.d	All broadcast stations shall be capable of receiving and sending this address, and all stations will process the information contained within the frame	5.3.4.2.2.2.2.7	M		Yes__ No__		
204.2.2.2.2.7.e	Data link acknowledgement of the global address shall not be allowed, although the TEST response PDU is allowed in the case where a TEST message is received with the global address in the destination field and the poll bit is set to 0	5.3.4.2.2.2.2.7	M		Yes__ No__		

Downloaded from http://www.everyspec.com

APPENDIX B

Item	Protocol Feature	Reference	Status	Support	Notes
204.2.2.2.2.7.f	Coupled data link acknowledgement of the global address using the F-bit shall not be allowed	5.3.4.2.2.2.2.7	M	Yes__ No__	
204.2.2.2.2.7.g	An uncoupled TEST response PDU with its F-bit set to zero shall be sent in response to a TEST command PDU addressed to the global address	5.3.4.2.2.2.2.7	M	Yes__ No__	
204.2.2.3	Mapping	5.3.4.2.2.3	M	Yes__ No__	
204.2.3	Control Field	5.3.4.2.3	M	Yes__ No__	
204.2.3.1	Type 1 Operations	5.3.4.2.3.1	M	Yes__ No__	
204.2.3.2	Type 2 Operations	5.3.4.2.3.2	203.2:M	Yes__ No__	
204.2.3.2.a	The Type 2 control field shall be repeated if more than one destination address is present	5.3.4.2.3.2	203.2:M	Yes__ No__	
204.2.3.2.b	Each destination address field shall have a corresponding control field	5.3.4.2.3.2	203.2:M	Yes__ No__	
204.2.3.2.c	Each of the corresponding control fields (when repeated) shall be identical except for the P/F bit and sequence numbers	5.3.4.2.3.2	203.2:M	Yes__ No__	
204.2.3.3	Type 4 Operations	5.3.4.2.3.3	203.4:M	Yes__ No__	
204.2.3.4	P/F Bit Type 1 Type 2 Type 4	5.3.4.2.3.4	M 203.2:M X	Yes__ No__ Yes__ No__ No	
204.2.3.4.a	The P-bit set to 1 shall be used to solicit a response PDU, with the F-bit set to 1	5.3.4.2.3.4	M	Yes__ No__	
204.2.3.4.b	On a data link, at most one PDU with P-bit set to 1 shall be outstanding in a given direction at a given time Type 1 Type 2 Type 4	5.3.4.2.3.4	203.1:M 203.2:M X	Yes__ No__ Yes__ No__ No	

Downloaded from http://www.everyspec.com

APPENDIX B

Item	Protocol Feature	Reference	Status	Support	Notes
204.2.3.4.c	Before a station issues another PDU with the P-bit set to 1 to a particular destination, it shall have received a response PDU from that remote station with the F-bit set to 1 or have timed out waiting for that response PDU	5.3.4.2.3.4	M	Yes__ No__	
204.2.3.5	Sequence Numbers	5.3.4.2.3.5	203.2:M	Yes__ No__	
204.2.3.5.a	The Type 2 I and S PDUs shall contain sequence numbers	5.3.4.2.3.5	203.2:M	Yes__ No__	
204.2.3.5.b	The sequence numbers shall be in the range of 0-127	5.3.4.2.3.5	203.2:M	Yes__ No__	
204.2.3.6	Identification Numbers	5.3.4.2.3.6	203.4:M	Yes__ No__	
204.2.3.6.a	The Type 4 DIA and DRR/DRNR response S PDUs shall contain an identification number	5.3.4.2.3.6	203.4:M	Yes__ No__	
204.2.3.6.b	The identification numbers shall be in the range of 1-255	5.3.4.2.3.6	203.4:M	Yes__ No__	
204.2.3.6.c	The identification number of an S PDU command (bits 9-16) shall be filled with zeroes	5.3.4.2.3.6	203.4:M	Yes__ No__	
204.2.3.7	Precedence	5.3.4.2.3.7	203.4:M	Yes__ No__	
204.2.4	Information field	5.3.4.2.4	M	Yes__ No__	
204.2.4.a	The length of the information field shall be a multiple of 8 bits, not to exceed 3345 octets	5.3.4.2.4	M	Yes__ No__	
204.2.4.b	If the data is not a multiple of 8 bits, 1 to 7 fill bits (0) shall be added to meet this requirement	5.3.4.2.4	M	Yes__ No__	
204.2.5	FCS	5.3.4.2.5	M	Yes__ No__	
204.2.5.a	For error detection, all frames shall include a 32-bit FCS prior to the closing flag sequence	5.3.4.2.5	M	Yes__ No__	

Downloaded from http://www.everyspec.com

APPENDIX B

Item	Protocol Feature	Reference	Status	Support	Notes
204.2.5.b	FCS generation shall be in accordance with the paragraph entitled "32-bit Frame Checking Sequence" in ISO 3309, and implemented in a manner that provides a unique remainder when a frame is received without bit errors incurred during transmission	5.3.4.2.5	M	Yes__ No__	
204.2.5.c	When the FCS is implemented via a 32-bit shift register, the shift register shall be initialized to all ones before checking or calculation of the FCS	5.3.4.2.5	M	Yes__ No__	
204.2.5.d	If the FCS of a received frame proves the frame to be invalid, the frame shall be discarded	5.3.4.2.5	M	Yes__ No__	
204.3	Data link PDU Construction	5.3.4.3	M	Yes__ No__	
204.3.1	Order-of-Bit Transmission	5.3.4.3.1	M	Yes__ No__	
204.3.1.a	The Information Field and control field(s) shall be transmitted LSB of each octet first	5.3.4.3.1	M	Yes__ No__	
204.3.1.b	The flag shall be transmitted LSB first	5.3.4.3.1	M	Yes__ No__	
204.3.1.c	For the FCS, the MSB shall be transmitted first	5.3.4.3.1	M	Yes__ No__	
204.3.1.d	The information field octets shall be transmitted in the same order as received from the upper layers, LSB of each octet first	5.3.4.3.1	M	Yes__ No__	
204.3.2	Zero-bit Insertion Algorithm	5.3.4.3.2	M	Yes__ No__	
204.3.2.a	The occurrence of a spurious flag sequence within a frame or Transmission Header shall be prevented by employing a 0-bit insertion algorithm	5.3.4.3.2	M	Yes__ No__	

Downloaded from http://www.everyspec.com

Item	Protocol Feature	Reference	Status	Support	Notes
204.3.2.b	After the entire frame has been constructed, the transmitter shall always insert a 0 bit after the appearance of five 1's in the frame (with the exception of the flag fields)	5.3.4.3.2	M	Yes__ No__	
204.3.2.c	After detection of an opening flag sequence, the receiver shall search for a pattern of five 1's.	5.3.4.3.2	M	Yes__ No__	
204.3.2.d	When the pattern of five 1's appears, the sixth bit shall be examined	5.3.4.3.2	M	Yes__ No__	
204.3.2.e	If the sixth bit is a 0, the 5 bits shall be passed as data, and the 0 shall be deleted	5.3.4.3.2	M	Yes__ No__	
204.3.2.f	If the sixth bit is a 1, the receiver shall inspect the seventh bit	5.3.4.3.2	M	Yes__ No__	
204.3.2.g	If the seventh bit is a 0, a flag sequence has been received. If the seventh bit is a 1, an invalid message has been received and shall be discarded	5.3.4.3.2	M	Yes__ No__	

A.5.5 Operational Parameters

Item	Protocol Feature	Reference	Status	Support	Notes
205	Operational Parameters	5.3.5	M	Yes__ No__	
205.1	Type 1 Operational Parameters	5.3.5.1	M	Yes__ No__	
205.1.a	The P-bit set to 1 shall be used to solicit (poll) an immediate correspondent response PDU with the F-bit set to 1 from the addressed station	5.3.5.1	M	Yes__ No__	
205.1.b	The response with F-bit set to 1 shall be transmitted in accordance with the RHD procedures defined in Appendix C	5.3.5.1 and C.4.2	M	Yes__ No__	
205.2	Type 2 Operational Parameters	5.3.5.2	203.2:M	Yes__ No__	
205.2.1	Modulus	5.3.5.2.1	203.2:M	Yes__ No__	

Downloaded from http://www.everyspec.com

APPENDIX B

Item	Protocol Feature	Reference	Status	Support	Notes
205.2.1.a	Each I PDU shall be sequentially numbered with a numeric value between 0 and MODULUS minus ONE (where MODULUS is the modulus of the sequence numbers)	5.3.5.2.1	203.2:M	Yes__ No__	
205.2.1.b	MODULUS shall equal 128 for the Type 2 control field format	5.3.5.2.1	203.2:M	Yes__ No__	
205.2.1.c	The sequence numbers shall cycle through the entire range	5.3.5.2.1	203.2:M	Yes__ No__	
205.2.1.d	The maximum number of sequentially numbered I PDUs that may be outstanding (that is, unacknowledged) in a given direction of a data link connection at any given time shall never exceed one less than the modulus of the sequence numbers	5.3.5.2.1	203.2:M	Yes__ No__	
205.2.2	PDU State Variables and Sequence Numbers	5.3.5.2.2	203.2:M	Yes__ No__	
205.2.2.a	A station shall maintain a V(S) for the I PDUs it sends and a V(R) for the I PDUs it receives on each data link connection	5.3.5.2.2	203.2:M	Yes__ No__	
205.2.2.b	The operation of V(S) shall be independent of the operation of V(R)	5.3.5.2.2	203.2:M	Yes__ No__	
205.2.2.1	Send-state Variable V(S)	5.3.5.2.2.1	203.2:M	Yes__ No__	
205.2.2.1.a	The V(S) shall denote the sequence number of the next in-sequence I PDU to be sent on a specific data link connection	5.3.5.2.2.1	203.2:M	Yes__ No__	
205.2.2.1.b	The V(S) shall take on a value between 0 and MODULUS minus ONE	5.3.5.2.2.1	203.2:M	Yes__ No__	

Downloaded from http://www.everyspec.com

APPENDIX B

Item	Protocol Feature	Reference	Status	Support	Notes
205.2.2.1.c	The value of V(S) shall be incremented by one with each successive I PDU transmission on the associated data link connection, but shall not exceed receive sequence number N(R) of the last received PDU by more than MODULUS minus ONE	5.3.5.2.2.1	203.2:M	Yes__ No__	
205.2.2.2	Send-sequence Number N(S)	5.3.5.2.2.2	203.2:M	Yes__ No__	
205.2.2.2.a	Only I PDUs shall contain N(S), the send sequence number of the sent PDU	5.3.5.2.2.2	203.2:M	Yes__ No__	
205.2.2.2.b	Prior to sending an I PDU, the value of the N(S) shall be set equal to the value of the V(S) for that data link connection	5.3.5.2.2.2	203.2:M	Yes__ No__	
205.2.2.3	Receive-state Variable V(R)	5.3.5.2.2.3	203.2:M	Yes__ No__	
205.2.2.3.a	The V(R) shall denote the sequence number of the next in-sequence I PDU to be received on a specific data link connection	5.3.5.2.2.3	203.2:M	Yes__ No__	
205.2.2.3.b	The V(R) shall take on a value between 0 and MODULUS minus ONE	5.3.5.2.2.3	203.2:M	Yes__ No__	
205.2.2.3.c	The value of the V(R) associated with a specific data link connection shall be incremented by one whenever an error-free I PDU is received whose N(S) equals the value of the V(R) for the data link connection	5.3.5.2.2.3	203.2:M	Yes__ No__	
205.2.2.4	Receive-sequence Number N(R)	5.3.5.2.2.4	203.2:M	Yes__ No__	
205.2.2.4.a	All I and S PDUs shall contain N(R), the expected sequence number of the next received I PDU on the specified data link connection	5.3.5.2.2.4	203.2:M	Yes__ No__	

Downloaded from http://www.everyspec.com

APPENDIX B

Item	Protocol Feature	Reference	Status	Support	Notes
205.2.2.4.b	Prior to sending an I or S PDU, the value of N(R) shall be set equal to the current value of the associated V(R) for that data link connection	5.3.5.2.2.4	203.2:M	Yes__ No__	
205.2.2.4.c	N(R) shall indicate that the station sending the N(R) has received correctly all I PDUs numbered up through N(R)-1 on the specified data link connection	5.3.5.2.2.4	203.2:M	Yes__ No__	
205.2.3	P/F bit	5.3.5.2.3	203.2:M	Yes__ No__	
205.2.3.a	The P/F bit shall serve a function in Type 2 operation in both command and response PDUs	5.3.5.2.3	203.2:M	Yes__ No__	
205.2.3.b	In command PDUs the P/F bit shall be referred to as the P-bit	5.3.5.2.3	203.2:M	Yes__ No__	
205.2.3.c	In response PDUs it shall be referred to as the F-bit	5.3.5.2.3	203.2:M	Yes__ No__	
205.2.3.1	Poll-bit Functions	5.3.5.2.3.1	203.2:M	Yes__ No__	
205.2.3.1.a	A command PDU with the P-bit set to 1 shall be used to solicit (poll) a response PDU with the F-bit set to 1 from the addressed station on a data link connection	5.3.5.2.3.1	203.2:M	Yes__ No__	
205.2.3.1.b	Only one Type 2 PDU with a P-bit set to 1 shall be outstanding in a given direction at a given time on the data link connection between any specified pair of stations	5.3.5.2.3.1	203.2:M	Yes__ No__	
205.2.3.1.c	Before a station issues another PDU on the same data link connection with the P-bit set to 1, the station shall have received a response PDU with the F-bit set to 1 from the addressed station	5.3.5.2.3.1	203.2:M	Yes__ No__	

Downloaded from http://www.everyspec.com

APPENDIX B

Item	Protocol Feature	Reference	Status	Support	Notes
205.2.3.1.d	If no valid response PDU is received within a system-defined P-bit timer time-out period, the resending of a command PDU with the P-bit set to 1 shall be permitted for error recovery purposes	5.3.5.2.3.1	203.2:M	Yes__ No__	
205.2.3.2	Final-bit Functions	5.3.5.2.3.2	203.2:M	Yes__ No__	
205.2.3.2.a	The F-bit set to 1 shall be used to respond to a command PDU with the P-bit set to 1	5.3.5.2.3.2	203.2:M	Yes__ No__	
205.2.3.2.b	Following the receipt of a command PDU with the P-bit set to 1, the station shall send a response PDU with the F-bit set to 1 on the appropriate data link connection at the first possible opportunity	5.3.5.2.3.2	203.2:M	Yes__ No__	
205.2.3.2.c	The response PDU shall be assigned an URGENT precedence	5.3.5.2.3.2	203.2:M	Yes__ No__	
205.2.3.2.d	The station shall be permitted to send appropriate response PDUs with the F-bit set to 0 at any net access opportunity without the need for a command PDU	5.3.5.2.3.2	203.2:M	Yes__ No__	
205.3	Type 4 Operational Parameters	5.3.5.3	203.4:M	Yes__ No__	
205.3.1	Identification Number	5.3.5.3.1	203.4:M	Yes__ No__	
205.3.1.a	Each station shall keep a number for originating PDUs	5.3.5.3.1	203.4:M	Yes__ No__	
205.3.1.b	Duplicate frame identification numbers from the same originator shall not be used for more than one outstanding (unacknowledged) DIA PDU	5.3.5.3.1	203.4:M	Yes__ No__	

Downloaded from http://www.everyspec.com

A.5.6 Commands and Responses

Item	Protocol Feature	Reference	Status	Support	Notes
206	Commands and Responses	5.3.6	M	Yes__ No__	
206.a	A single multi-addressed frame shall not contain different PDU types nor contain the same individual address more than once	5.3.6	M	Yes__ No__	
206.b	The control field for all addresses in a single multi-addressed frame shall be the same except for the P/F bit and sequence number	5.3.6	M	Yes__ No__	
206.c	Response PDUs requiring "earliest opportunity" transmission shall be queued ahead of all other PDUs, except those queued for "first possible opportunity" for transmission during the next network access opportunity	5.3.6	M	Yes__ No__	
206.d	The response PDU shall assume the precedence level of the highest PDU queued or the mid (PRIORITY) level, whichever is greater	5.3.6	M	Yes__ No__	
206.e	The Type 4 DRR response PDU shall assume the precedence of the DIA frame it is acknowledging	5.3.6	M	Yes__ No__	
206.1	Type 1 Operation Commands and Responses	5.3.6.1	M	Yes__ No__	
206.1.1	UI Command	5.3.6.1.1	M	Yes__ No__	
206.1.1.a	The UI PDU shall be used to send information to one or more stations	5.3.6.1.1	M	Yes__ No__	
206.1.1.b	The UI PDU shall be addressed to individual, special, group or global addresses	5.3.6.1.1	M	Yes__ No__	
206.1.1.c	The source address shall be the individual address of the transmitting station	5.3.6.1.1	M	Yes__ No__	
206.1.2	URR Command	5.3.6.1.2	M	Yes__ No__	

Downloaded from http://www.everyspec.com

APPENDIX B

Item	Protocol Feature	Reference	Status	Support	Notes
206.1.2.a	The URR command PDU shall be transmitted to one or more stations to indicate that the sending station is ready to receive I, DIA and UI PDUs.	5.3.6.1.2	M	Yes__ No__	
206.1.2.b	The URR PDU shall be addressed to individual, group or global addresses	5.3.6.1.2	M	Yes__ No__	
206.1.2.c	The source address shall be the individual address of the transmitting station	5.3.6.1.2	M	Yes__ No__	
206.1.3	URNR Command	5.3.6.1.3	M	Yes__ No__	
206.1.3.a	The URNR command PDU shall be transmitted to one or more stations to indicate that the sending station is busy and cannot receive I, DIA or UI PDUs	5.3.6.1.3	M	Yes__ No__	
206.1.3.b	The URNR PDU shall be addressed to individual, group or global addresses	5.3.6.1.3	M	Yes__ No__	
206.1.3.c	The source address shall be the individual address of the transmitting station	5.3.6.1.3	M	Yes__ No__	
206.1.4	TEST Command	5.3.6.1.4	M	Yes__ No__	
206.1.4.a	The TEST command shall be used to cause the destination station to respond with the TEST response at the earliest opportunity, thus performing a basic test of the transmission path	5.3.6.1.4	M	Yes__ No__	
206.1.4.b	If an information field is present, the received information field shall be returned, if possible, by the addressed station in the TEST response PDU	5.3.6.1.4	M	Yes__ No__	

Downloaded from http://www.everyspec.com

APPENDIX B

Item	Protocol Feature	Reference	Status	Support	Notes
206.1.4.c	The TEST command, with the P-bit set to 1, shall cause the individually addressed destination station(s) to respond with a TEST response PDU (with no information field), with the F-bit set to 1, after the appropriate RHD period.	5.3.6.1.4 and C.4.2	M	Yes__ No__	
206.1.4.d	The TEST command, with the P-bit set to 0 shall cause each destination station (including members of group and global addresses) to respond with a TEST response (with information field) with the F-bit set to 0 at the earliest opportunity	5.3.6.1.4	M	Yes__ No__	
206.1.4.e	The TEST command PDU shall be addressed to an individual and/or group or global destination addresses	5.3.6.1.4	M	Yes__ No__	
206.1.4.f	The source address shall be an individual address	5.3.6.1.4	M	Yes__ No__	
206.1.5	BLANK	5.3.6.1.5	X	---	
206.1.6	URR Response	5.3.6.1.6	M	Yes__ No__	
206.1.6.a	The URR response shall be used to acknowledge a UI command that requested an acknowledgement (P-bit set to 1)	5.3.6.1.6	M	Yes__ No__	
206.1.6.b	The URR response shall be the first PDU sent by the receiving station upon receiving a UI command after the appropriate RHD period	5.3.6.1.6 and C.4.2	M	Yes__ No__	
206.1.6.c	The source and destination shall be individual addresses	5.3.6.1.6	M	Yes__ No__	
206.1.7	TEST Response	5.3.6.1.7	M	Yes__ No__	
206.1.7.a	The TEST response, with F-bit set to 1, without an information field shall be used by individual addresses to reply to the TEST command with the P-bit set to 1	5.3.6.1.7	M	Yes__ No__	

Downloaded from http://www.everyspec.com

APPENDIX B

Item	Protocol Feature	Reference	Status		Support		Notes
206.1.7.b	The TEST response shall be the first PDU sent by the receiving station upon receiving a TEST command PDU, after the appropriate RHD period	5.3.6.1.7 and C.4.2	M		Yes__ No__		
206.1.7.c	The TEST response, with the F-bit set to 0, shall be used by all addresses (individual, group and global) to reply to the TEST command with the P-bit set to 0 at the earliest opportunity	5.3.6.1.7	M		Yes__ No__		
206.1.7.d	If an information field was present in the TEST command PDU that had the P-bit set to 0, the TEST response PDU shall contain the same information field contents	5.3.6.1.7	M		Yes__ No__		
206.1.7.e	The source and destination addresses shall be an individual address	5.3.6.1.7	M		Yes__ No__		
206.1.8	BLANK	5.3.6.1.8	X		---		
206.1.9	URNR Response	5.3.6.1.9	Send: O	Recv: M	Send: Yes__ No__	Recv: Yes__ No__	
206.1.9.a	The URNR response PDU shall be used to reply to a UI command with the P-bit set to 1, if the UI command cannot be processed due to a busy condition	5.3.6.1.9	206.1.9:M		Yes__ No__		
206.1.9.b	If used, the URNR response shall be the first PDU transmitted by the receiving station, upon receiving a UI command, after the appropriate RHD period	5.3.6.1.9 and C.4.2	206.1.9:M		Yes__ No__		
206.1.9.c	The URNR response shall have the F-bit set to 1 and shall be addressed to the source of the UI command	5.3.6.1.9	M		Yes__ No__		
206.2	Type 2 Operation Commands and Responses	5.3.6.2	203.2:M		Yes__ No__		
206.2.1	Information-Transfer-Format Command and Response	5.3.6.2.1	203.2:M		Yes__ No__		

Downloaded from http://www.everyspec.com

APPENDIX B

Item	Protocol Feature	Reference	Status	Support	Notes
206.2.1.a	The function of the I command and response shall be to transfer sequentially numbered PDUs that contain an information field across a data link connection	5.3.6.2.1	203.2:M	Yes__ No__	
206.2.1.b	N(S) and N(R) associated with group and global addresses shall be set to zero by the transmitter and ignored by the receiver and are not acknowledged	5.3.6.2.1	203.2:M	Yes__ No__	
206.2.1.c	The encoding of the I PDU control field for Type 2 operation shall be as listed in Figure 16	5.3.6.2.1	203.2:M	Yes__ No__	
206.2.1.d	The I PDU control field shall contain two sequence number subfields: N(S), which shall indicate the sequence number associated with the I PDU; and N(R), which shall indicate the sequence number (as of the time the PDU is sent) of the next expected I PDU to be received, and, consequently, shall indicate that the I PDUs numbered up through N(R)-1 have been received correctly	5.3.6.2.1	203.2:M	Yes__ No__	
206.2.2	Supervisory-Format Commands and Responses	5.3.6.2.2	203.2:M	Yes__ No__	
206.2.2.a	S PDUs shall be used to perform numbered supervisory functions such as acknowledgements, temporary suspension of information transfer, or error recovery	5.3.6.2.2	203.2:M	Yes__ No__	
206.2.2.b	S PDUs shall not contain an information field and, therefore, shall not increment the V(S) at the sender or the V(R) at the receiver	5.3.6.2.2	203.2:M	Yes__ No__	
206.2.2.c	Encoding of the S PDU control field for Type 2 operation shall be as shown in Figure 17	5.3.6.2.2	203.2:M	Yes__ No__	

Downloaded from http://www.everyspec.com

APPENDIX B

Item	Protocol Feature	Reference	Status	Support	Notes
206.2.2.d	An S PDU shall contain an N(R), which shall indicate, at the time of sending, the sequence number of the next expected I PDU to be received. This shall acknowledge that all I PDUs numbered up through N(R)-1 have been received correctly, except in the case of the selective reject (SREJ) PDU.	5.3.6.2.2	203.2:M	Yes__ No__	
206.2.2.1	RR Command and Response	5.3.6.2.2.1	203.2:M	Yes__ No__	
206.2.2.1.a	The RR PDU shall be used by a station to indicate it is ready to receive I PDUs	5.3.6.2.2.1	203.2:M	Yes__ No__	
206.2.2.1.b	I PDUs numbered up through N(R)-1 shall be considered as acknowledged	5.3.6.2.2.1	203.2:M	Yes__ No__	
206.2.2.2	REJ Command and Response	5.3.6.2.2.2	203.2:M	Yes__ No__	
206.2.2.2.a	The REJ PDU shall be used by a station to request the resending of I PDUs, starting with the PDU numbered N(R)	5.3.6.2.2.2	203.2:M	Yes__ No__	
206.2.2.2.b	I PDUs numbered up through N(R)-1 shall be considered as acknowledged	5.3.6.2.2.2	203.2:M	Yes__ No__	
206.2.2.2.c	It shall be possible to send additional I PDUs awaiting initial sending after the resent I PDUs	5.3.6.2.2.2	203.2:M	Yes__ No__	
206.2.2.2.d	With respect to each direction of sending on a data link connection, only one “sent REJ” condition shall be established at any given time	5.3.6.2.2.2	203.2:M	Yes__ No__	
206.2.2.2.e	The “sent REJ” condition shall be cleared upon receipt of an I PDU with an N(S) equal to the N(R) of the REJ PDU	5.3.6.2.2.2	203.2:M	Yes__ No__	

Downloaded from http://www.everyspec.com

APPENDIX B

Item	Protocol Feature	Reference	Status	Support	Notes
206.2.2.2.f	Receipt of a REJ PDU shall indicate the clearance of a busy condition except as noted in 5.3.7.2.5.8	5.3.6.2.2.2 and 5.3.7.2.5.8	203.2:M	Yes__ No__	
206.2.2.3	RNR Command and Response	5.3.6.2.2.3	203.2:M	Yes__ No__	
206.2.2.3.a	The RNR PDU shall be used by a station to indicate a busy condition (a temporary inability to accept subsequent I PDUs)	5.3.6.2.2.3	203.2:M	Yes__ No__	
206.2.2.3.b	I PDUs numbered up through N(R)-1 shall be considered as acknowledged	5.3.6.2.2.3	203.2:M	Yes__ No__	
206.2.2.3.c	I PDUs numbered N(R) and any subsequent I PDUs received shall not be considered as acknowledged; the acceptance status of these PDUs shall be indicated in subsequent exchanges	5.3.6.2.2.3	203.2:M	Yes__ No__	
206.2.2.4	SREJ Command and Response	5.3.6.2.2.4	203.2:M	Yes__ No__	
206.2.2.4.a	If the P-bit in the SREJ PDU is set to 1, then I PDUs numbered up to N(R)-1 shall be considered acknowledged	5.3.6.2.2.4	203.2:M	Yes__ No__	
206.2.2.4.b	Each SREJ exception condition shall be cleared (reset) upon receipt of an I PDU with an N(S) equal to the N(R) of the SREJ PDU	5.3.6.2.2.4	203.2:M	Yes__ No__	
206.2.2.4.c	I PDUs that have been transmitted following the I PDU designated by the SREJ PDU shall not be retransmitted as the result of receiving the SREJ PDU	5.3.6.2.2.4	203.2:M	Yes__ No__	
206.2.3	U Commands and Responses	5.3.6.2.3	203.2:M	Yes__ No__	
206.2.3.a	U commands and responses shall be used in Type 2 operations to extend the number of data link connection control functions	5.3.6.2.3	203.2:M	Yes__ No__	

Downloaded from http://www.everyspec.com

APPENDIX B

Item	Protocol Feature	Reference	Status	Support	Notes
206.2.3.b	The U PDUs shall not increment the state variables on the data link connection at either the sending or the receiving station	5.3.6.2.3	203.2:M	Yes__ No__	
206.2.3.c	Encoding of the U PDU control field shall be as in Figure 18	5.3.6.2.3	203.2:M	Yes__ No__	
206.2.3.1	SABME Command	5.3.6.2.3.1	203.2:M	Yes__ No__	
206.2.3.1.a	The SABME command PDU shall be used to establish a data link connection to the destination station in the ABM	5.3.6.2.3.1	203.2:M	Yes__ No__	
206.2.3.1.b	No information shall be permitted with the SABME command PDU	5.3.6.2.3.1	203.2:M	Yes__ No__	
206.2.3.1.c	The destination station shall confirm receipt of the SABME command PDU by sending a UA response PDU on that data link connection at the earliest opportunity	5.3.6.2.3.1	203.2:M	Yes__ No__	
206.2.3.1.d	Upon acceptance of the SABME command PDU, the destination station V(S)s and V(R)s shall be set to 0	5.3.6.2.3.1	203.2:M	Yes__ No__	
206.2.3.1.e	If the UA response PDU is received correctly, then the initiating station shall also assume the ABM with its corresponding V(S)s and V(R)s set to 0	5.3.6.2.3.1	203.2:M	Yes__ No__	
206.2.3.1.f	Previously sent I PDUs that are unacknowledged when this command is executed shall remain unacknowledged	5.3.6.2.3.1	203.2:M	Yes__ No__	
206.2.3.2	DISC Command	5.3.6.2.3.2	203.2:M	Yes__ No__	
206.2.3.2.a	The DISC command PDU shall be used to terminate an ABM previously set by a SABME command PDU	5.3.6.2.3.2	203.2:M	Yes__ No__	

Downloaded from http://www.everyspec.com

APPENDIX B

Item	Protocol Feature	Reference	Status	Support	Notes
206.2.3.2.b	It shall be used to inform the destination station that the source station is suspending operation of the data link connection and the destination station should assume the logically disconnected mode	5.3.6.2.3.2	203.2:M	Yes__ No__	
206.2.3.2.c	No information field shall be permitted with the DISC command PDU	5.3.6.2.3.2	203.2:M	Yes__ No__	
206.2.3.2.d	Prior to executing the command, the destination station shall confirm the acceptance of the DISC command PDU by sending a UA response PDU on that data link connection	5.3.6.2.3.2	203.2:M	Yes__ No__	
206.2.3.2.e	Previously sent I PDUs that are unacknowledged when this command is executed shall remain unacknowledged	5.3.6.2.3.2	203.2:M	Yes__ No__	
206.2.3.3	RSET Command	5.3.6.2.3.3	203.2:M	Yes__ No__	
206.2.3.3.a	The RSET command PDU shall be used by a station in an operational mode to reset the V(R) in the addressed station	5.3.6.2.3.3	203.2:M	Yes__ No__	
206.2.3.3.b	No information field shall be permitted with the RSET command PDU	5.3.6.2.3.3	203.2:M	Yes__ No__	
206.2.3.3.c	The addressed station shall confirm acceptance of the RSET command by transmitting a UA response PDU at the earliest opportunity	5.3.6.2.3.3	203.2:M	Yes__ No__	
206.2.3.3.d	Upon acceptance of this command, the V(R) of the addressed station shall be set to 0	5.3.6.2.3.3	203.2:M	Yes__ No__	
206.2.3.3.e	If the UA response PDU is received correctly, the initializing station shall reset its V(S) to 0	5.3.6.2.3.3	203.2:M	Yes__ No__	
206.2.3.4	UA Response	5.3.6.2.3.4	203.2:M	Yes__ No__	

Downloaded from http://www.everyspec.com

APPENDIX B

Item	Protocol Feature	Reference	Status	Support	Notes
206.2.3.4.a	The UA response PDU shall be used by a station on a data link connection to acknowledge receipt and acceptance of the SABME, DISC and RSET command PDUs	5.3.6.2.3.4	203.2:M	Yes__ No__	
206.2.3.4.b	These received command PDUs shall not be executed until the UA response PDU is sent	5.3.6.2.3.4	203.2:M	Yes__ No__	
206.2.3.4.c	No information field shall be permitted with the UA response PDU	5.3.6.2.3.4	203.2:M	Yes__ No__	
206.2.3.5	DM Response	5.3.6.2.3.5	203.2:M	Yes__ No__	
206.2.3.5.a	The DM response PDU shall be used to report status indicating that the station is logically disconnected from the data link connection and is in ADM	5.3.6.2.3.5	203.2:M	Yes__ No__	
206.2.3.5.b	No information field shall be permitted with the DM response PDU	5.3.6.2.3.5	203.2:M	Yes__ No__	
206.2.3.6	FRMR Response	5.3.6.2.3.6	203.2:M	Yes__ No__	
206.2.3.6.a	The FRMR response PDU shall be used by the station in the ABM to report that one of the following conditions, which is not correctable by resending the identical PDU, resulted from the receipt of a PDU from the remote station:	5.3.6.2.3.6	203.2:M	Yes__ No__	
206.2.3.6.a.1	The receipt of a command PDU or a response PDU that is invalid or not implemented	5.3.6.2.3.6.a	206.2.3.6.a:O.<4>	Yes__ No__	
206.2.3.6.a.2	The receipt of an I PDU with an information field that exceeded the established maximum information field length that can be accommodated by the receiving station for that data link connection.	5.3.6.2.3.6.b	206.2.3.6.a:O.<4>	Yes__ No__	

Downloaded from http://www.everyspec.com

APPENDIX B

Item	Protocol Feature	Reference	Status	Support	Notes
206.2.3.6.a.3	The receipt of an invalid N(R) from the remote station. An invalid N(R) shall be defined as one that signifies an I PDU that has previously been sent and acknowledged, or one that signifies an I PDU that has not been sent and is not the next sequential I PDU waiting to be sent.	5.3.6.2.3.6.c	206.2.3.6.a:O.<4>	Yes__ No__	
206.2.3.6.a.4	The receipt of an invalid N(S) from the remote station. An invalid N(S) shall be defined as an N(S) that is greater than or equal to the last sent N(R)+ k, where k is the maximum number of outstanding I PDUs. The parameter k is the window size indicated in the XNP message.	5.3.6.2.3.6.d and Appendix E	206.2.3.6.a:O.<4>	Yes__ No__	
206.2.3.6.b	The responding station shall send the FRMR response PDU at the earliest opportunity	5.3.6.2.3.6	203.2:M	Yes__ No__	
206.2.3.6.c	An information field shall be returned with the FRMR response PDU to provide the reason for the PDU rejection	5.3.6.2.3.6	203.2:M	Yes__ No__	
206.2.3.6.d	The information field shall contain the fields shown in Figure 19	5.3.6.2.3.6	203.2:M	Yes__ No__	
206.2.3.6.e	The station receiving the FRMR response PDU shall be responsible for initiating the appropriate mode setting or resetting corrective action by initializing one or both directions of transmission on the data link connection, using the SABME, RSET or DISC command PDUs, as applicable	5.3.6.2.3.6	203.2:M	Yes__ No__	
206.3	Type 4 Operation Commands and Responses	5.3.6.3	203.4:M	Yes__ No__	

Downloaded from http://www.everyspec.com

Item	Protocol Feature	Reference	Status	Support	Notes
206.3.1	Unnumbered Information (DIA) Transfer Format Command	5.3.6.3.1	203.4:M	Yes__ No__	
206.3.1.a	The function of the Type 4 DIA commands shall be to transfer PDUs that contain an identification number and an information field across a connectionless link	5.3.6.3.1	203.4:M	Yes__ No__	
206.3.1.b	The encoding of the PDU control field for Type 4 operation shall be as listed in Figure 20	5.3.6.3.1	203.4:M	Yes__ No__	
206.3.1.1	DIA PDU Acknowledgement	5.3.6.3.1.1	203.4:M	Yes__ No__	
206.3.2	Supervisory Format Commands and Responses	5.3.6.3.2	203.4:M	Yes__ No__	
206.3.2.a	The S PDUs shall be used to convey link acknowledgement of a DIA PDU and whether or not a station is ready to receive Type 4 PDUs	5.3.6.3.2	203.4:M	Yes__ No__	
206.3.2.b	The command S PDU level of precedence shall be set to the highest precedence while response S PDUs shall use the precedence of the DIA PDU which they are acknowledging	5.3.6.3.2	203.4:M	Yes__ No__	
206.3.2.c	The encoding of the S PDU control field for Type 4 operation shall be as listed in Figure 21	5.3.6.3.2	203.4:M	Yes__ No__	

A.5.7 Description of Procedures by Type

Item	Protocol Feature	Reference	Status	Support	Notes
207	Description of Procedures by Type	5.3.7	M	Yes__ No__	
207.1	Description of Type 1 Procedures	5.3.7.1	M	Yes__ No__	
207.1.1	Modes of Operation	5.3.7.1.1	M	Yes__ No__	
207.1.1.a	A station using Type 1 procedures shall support the entire procedure set whenever it is operational on the network	5.3.7.1.1	M	Yes__ No__	

Downloaded from http://www.everyspec.com

APPENDIX B

Item	Protocol Feature	Reference	Status	Support	Notes
207.1.2	Procedure for Addressing	5.3.7.1.2	M	Yes__ No__	
207.1.2.a	The address fields shall be used to indicate the source and destinations of the transmitted PDU	5.3.7.1.2	M	Yes__ No__	
207.1.2.b	The first bit in the source address field shall be used to identify whether a command or a response is contained in the PDU	5.3.7.1.2	M	Yes__ No__	
207.1.2.c	Individual, group, special and global addressing shall be supported for destination addresses in command PDUs	5.3.7.1.2	M	Yes__ No__	
207.1.2.d	The source address field shall contain an individual or special address	5.3.7.1.2	M	Yes__ No__	
207.1.3	Procedure for Using the P/F Bit	5.3.7.1.3	M	Yes__ No__	
207.1.3.a	The station receiving a UI or TEST command PDU with the P-bit set to 1 shall send an appropriate response PDU with the F-bit set to 1 Type 1 Type 2 Type 4	5.3.7.1.3	 203.1:M 203.2:M X	 Yes__ No__ Yes__ No__ No	
207.1.4	Procedures for Logical Data Link Set-up and Disconnection	5.3.7.1.4	M	Yes__ No__	
207.1.5	Procedures for Information Transfer	5.3.7.1.5	M	Yes__ No__	
207.1.5.1	Sending UI Command PDUs	5.3.7.1.5.1	M	Yes__ No__	
207.1.5.1.a	Information transfer from an initiating station to a responding station shall be accomplished by sending the UI command PDU	5.3.7.1.5.1	M	Yes__ No__	
207.1.5.1.b	When a sending station sends a UI command PDU with the P-bit set to 1, it shall start an acknowledgement timer for that transmission and initialize the internal transmission count variable to zero	5.3.7.1.5.1	M	Yes__ No__	

Downloaded from http://www.everyspec.com

APPENDIX B

Item	Protocol Feature	Reference	Status	Support	Notes
207.1.5.1.c	If all expected URR and URNR response PDUs are not received before the timer runs out, the sending station shall resend the UI command PDU, increment the internal transmission count variable, and restart the acknowledgement timer	5.3.7.1.5.1	M	Yes__ No__	
207.1.5.1.d	Prior to resending the UI command PDU, the group and global addresses shall be removed as well as individual and special addresses from which a response (URR or URNR) was received	5.3.7.1.5.1	M	Yes__ No__	
207.1.5.1.e	The special address 3, if used, shall not be removed prior to retransmission unless it is the only address remaining	5.3.7.1.5.1	M	Yes__ No__	
207.1.5.1.f	No retransmission shall be attempted unless an individual or special address other than 3 remains	5.3.7.1.5.1	M	Yes__ No__	
207.1.5.1.g	If a URR response PDU is still not received, this resending procedure shall be repeated until the value of the internal transmission count variable is equal to the value of the logical link parameter N4, at which time a DL-Status-Indication shall be reported to the upper layer indicating an acknowledgement failure	5.3.7.1.5.1 and 5.3.8.1.1	M	Yes__ No__	
207.1.5.1.h	An internal transmission count shall be maintained for each UI information exchange (where P-bit = 1) between a pair of sending and receiving stations	5.3.7.1.5.1	M	Yes__ No__	

Downloaded from http://www.everyspec.com

APPENDIX B

Item	Protocol Feature	Reference	Status	Support	Notes
207.1.5.1.i	Both the acknowledgement timer and internal transmission count, for that exchange, shall not affect the information exchange with other receiving stations	5.3.7.1.5.1	M	Yes__ No__	
207.1.5.1.j	If a URNR response PDU is received in response to a UI command with the P-bit set to 1, the receiving station shall designate the sending station as busy	5.3.7.1.5.1	M	Yes__ No__	
207.1.5.1.k	The retransmission of the UI command shall follow the rules for the busy condition	5.3.7.1.5.1	M	Yes__ No__	
207.1.5.1.m	Transmission of the UI commands to that station shall be discontinued until the busy state is cleared	5.3.7.1.5.1	M	Yes__ No__	
207.1.5.2	Receiving UI Command PDUs	5.3.7.1.5.2	M	Yes__ No__	
207.1.5.2.a	Reception of the UI command PDU with P-bit set to 0 shall not be acknowledged	5.3.7.1.5.2	M	Yes__ No__	
207.1.5.2.b	A station shall acknowledge the receipt of a valid UI command PDU, which has the P-bit set to 1 and contains the station individual address, by sending a URR response PDU to the originator of the command UI PDU	5.3.7.1.5.2	M	Yes__ No__	
207.1.5.2.c	If the receiving station is unable to accept UI PDUs due to a busy condition, it may respond with a URNR response PDU	5.3.7.1.5.2	O	Yes__ No__	
207.1.5.3	Sending URR Response PDUs	5.3.7.1.5.3	M	Yes__ No__	
207.1.5.3.a	A URR response PDU, with the F-bit set to 1, shall be sent only upon receipt of a UI command PDU, with the P-bit set to 1	5.3.7.1.5.3	M	Yes__ No__	

Downloaded from http://www.everyspec.com

APPENDIX B

Item	Protocol Feature	Reference	Status	Support	Notes
207.1.5.3.b	The URR response PDU shall be sent to the originator of the associated UI command PDU	5.3.7.1.5.3	M	Yes__ No__	
207.1.5.4	Sending URNR Response PDUs	5.3.7.1.5.4	206.1.9:M	Yes__ No__	
207.1.5.4.a	A URNR response PDU, with the F-bit set to 1, may be sent by the remote station to advise the originator of the associated UI command PDU that it is experiencing a busy condition and is unable to accept UI PDUs	5.3.7.1.5.4	O	Yes__ No__	
207.1.5.5	Receiving UI Acknowledgement	5.3.7.1.5.5	M	Yes__ No__	
207.1.5.5.a	After sending a UI command PDU with the P-bit set to 1, the sending station shall expect to receive an acknowledgement in the form of a URR response PDU from the station to which the command PDU was sent	5.3.7.1.5.5	M	Yes__ No__	
207.1.5.5.b	No acknowledgement shall be expected from group or global addresses or from the special address 3	5.3.7.1.5.5	M	Yes__ No__	
207.1.5.5.c	Upon receiving such a response PDU, the station shall stop the acknowledgement timer associated with the transmission for which the acknowledgement was received and reset the associated internal transmission count to zero	5.3.7.1.5.5	M	Yes__ No__	
207.1.5.6	Sending URNR Command PDUs	5.3.7.1.5.6	M	Yes__ No__	
207.1.5.7	Receiving URNR Command PDUs	5.3.7.1.5.7	M	Yes__ No__	
207.1.5.8	Sending URR Command PDUs	5.3.7.1.5.8	M	Yes__ No__	
207.1.5.9	Receiving URR Command PDUs	5.3.7.1.5.9	M	Yes__ No__	
207.1.5.10	Using TEST Command and Response PDUs	5.3.7.1.5.10	M	Yes__ No__	

Downloaded from http://www.everyspec.com

APPENDIX B

Item	Protocol Feature	Reference	Status	Support	Notes
207.1.5.10.a	Any TEST command PDU received in error shall be discarded and no response PDU sent	5.3.7.1.5.10	M	Yes__ No__	
207.1.5.10.b	In the event of a test failure, it shall be the responsibility of the TEST function initiator to determine any future actions	5.3.7.1.5.10	M	Yes__ No__	
207.2	Description of Type 2 Procedures	5.3.7.2	203.2:M	Yes__ No__	
207.2.1	Modes of Operation	5.3.7.2.1	203.2:M	Yes__ No__	
207.2.1.1	Operational Mode	5.3.7.2.1.1	203.2:M	Yes__ No__	
207.2.1.1.a	The operational mode shall be the ABM	5.3.7.2.1.1	203.2:M	Yes__ No__	
207.2.1.1.b	Either station shall be able to send commands at any time and initiate response transmissions without receiving explicit permission from the other station	5.3.7.2.1.1	203.2:M	Yes__ No__	
207.2.1.1.c	Such an asynchronous transmission shall contain one or more PDUs that shall be used for information transfer and to indicate status changes in the station (for example, the number of the next expected I PDU; transition from a ready to a busy condition, or vice versa; occurrence of an exception condition)	5.3.7.2.1.1	203.2:M	Yes__ No__	
207.2.1.1.d	A station in ABM receiving a DISC command PDU shall respond with the UA response PDU if it is capable of executing the command	5.3.7.2.1.1	203.2:M	Yes__ No__	
207.2.1.2	Non-Operational Mode	5.3.7.2.1.2	203.2:M	Yes__ No__	
207.2.1.2.a	The non-operational mode shall be the ADM	5.3.7.2.1.2	203.2:M	Yes__ No__	

Downloaded from http://www.everyspec.com

APPENDIX B

Item	Protocol Feature	Reference	Status	Support	Notes
207.2.1.2.b	ADM differs from ABM in that the data link connection is logically disconnected from the physical medium such that no information (user data) shall be sent or accepted	5.3.7.2.1.2	203.2:M	Yes__ No__	
207.2.1.2.c	A data link connection shall be system-predefined as to the conditions that cause it to assume ADM	5.3.7.2.1.2	203.2:M	Yes__ No__	
207.2.1.2.d	A station on a data link connection in ADM shall be required to monitor transmissions received from its PL to accept and respond to one of the mode-setting command PDUs (SABME, DISC), or to send a DM response PDU at a medium access opportunity, when required	5.3.7.2.1.2	203.2:M	Yes__ No__	
207.2.1.2.e	A station in ADM receiving a DISC command PDU or any I or S PDU shall respond with the DM response PDU	5.3.7.2.1.2	203.2:M	Yes__ No__	
207.2.1.2.f	A station in ADM shall not establish a FRMR exception condition	5.3.7.2.1.2	203.2:M	Yes__ No__	
207.2.2	Procedure for Addressing	5.3.7.2.2	203.2:M	Yes__ No__	
207.2.2.a	The address fields for a PDU shall be used to indicate the individual source and up to 16 destinations	5.3.7.2.2	203.2:M	Yes__ No__	
207.2.2.b	The first bit in the source address field shall be used to identify whether a command or response is contained in the PDU	5.3.7.2.2	203.2:M	Yes__ No__	
207.2.3	Procedures for Using the P/F Bit	5.3.7.2.3	203.2:M	Yes__ No__	

Downloaded from http://www.everyspec.com

APPENDIX B

Item	Protocol Feature	Reference	Status	Support	Notes
207.2.3.a	An individually addressed station receiving a command PDU (SABME, DISC, RR, RNR, REJ, or I) with the P-bit set to 1 shall send a response PDU with the F-bit set to 1	5.3.7.2.3	203.2:M	Yes__ No__	
207.2.3.b	The response PDU returned by a station to a RSET, SABME or DISC command PDU with the P-bit set to 1 shall be a UA or DM response PDU with the F-bit set to 1	5.3.7.2.3	203.2:M	Yes__ No__	
207.2.3.c	The response PDU returned by a station to an I, RR or REJ command PDU with the P-bit set to 1 shall be an I, RR, REJ, RNR, DM or FRMR response PDU with the F-bit set to 1	5.3.7.2.3	203.2:M	Yes__ No__	
207.2.3.d	The response PDU returned by a station to an RNR command PDU with the P-bit set to 1 shall be an RR, REJ, RNR, DM or FRMR response PDU with the F-bit set to 1	5.3.7.2.3	203.2:M	Yes__ No__	
207.2.3.e	The response PDU returned by a station to a SREJ with the P-bit set to one shall be the requested I PDU (response) with the F-bit set to one	5.3.7.2.3	203.2:M	Yes__ No__	
207.2.4	Procedures for Logical Data Link Set-up and Disconnection	5.3.7.2.4	203.2:M	Yes__ No__	
207.2.4.1	Data Link Connection Phase	5.3.7.2.4.1	203.2:M	Yes__ No__	
207.2.4.1.a	Either station shall be able to take the initiative to initialize the data link connection	5.3.7.2.4.1	203.2:M	Yes__ No__	
207.2.4.1.1	Initiator Action	5.3.7.2.4.1.1	203.2:M	Yes__ No__	

Downloaded from http://www.everyspec.com

APPENDIX B

Item	Protocol Feature	Reference	Status	Support	Notes
207.2.4.1.1.a	When the station wishes to initialize the link, it shall send the SABME command PDU to one or more individual addresses and start the acknowledgement timer(s)	5.3.7.2.4.1.1	203.2:M	Yes__ No__	
207.2.4.1.1.b	Upon receipt of the UA response PDU, the station shall reset both the V(S) and V(R) to 0 for the corresponding data link connection, shall stop the acknowledgement timer and shall enter the information transfer phase	5.3.7.2.4.1.1	203.2:M	Yes__ No__	
207.2.4.1.1.c	When receiving the DM response PDU, the station that originated the SABME command PDU shall stop the acknowledgement timers for that link, shall not enter the information transfer phase for that station, and shall report to the higher layer for appropriate action	5.3.7.2.4.1.1	203.2:M	Yes__ No__	
207.2.4.1.1.d	Should any acknowledgement timer run out before receiving all UA or DM response PDUs, the station shall resend the SABME command PDU, after deleting the address and control fields corresponding to the received UAs or DMs, and restart the acknowledgement timers	5.3.7.2.4.1.1	203.2:M	Yes__ No__	
207.2.4.1.1.e	After resending the SABME command PDU N2 times, the station shall stop sending the SABME command PDU, may report to the higher layer protocol and may initiate other error recovery action	5.3.7.2.4.1.1	203.2:M	Yes__ No__	

Downloaded from http://www.everyspec.com

APPENDIX B

Item	Protocol Feature	Reference	Status	Support	Notes
207.2.4.1.1.f	Other Type 2 PDUs received (commands and responses) while attempting to connect shall be ignored by the station	5.3.7.2.4.1.1	203.2:M	Yes__ No__	
207.2.4.1.2	Respondent Action	5.3.7.2.4.1.2	203.2:M	Yes__ No__	
207.2.4.1.2.a	When a SABME command PDU is received, and the connection is desired, the station shall return a UA response PDU to the remote station, set both the V(S) and V(R) to 0 for the corresponding data link connection, and enter the information transfer phase	5.3.7.2.4.1.2	203.2:M	Yes__ No__	
207.2.4.1.2.b	The return of the UA response PDU shall take precedence over any other response PDU that may be pending at the station for that data link connection	5.3.7.2.4.1.2	203.2:M	Yes__ No__	
207.2.4.1.2.c	It shall be possible to follow the UA response PDU with additional PDUs, if pending	5.3.7.2.4.1.2	203.2:M	Yes__ No__	
207.2.4.1.2.d	If the connection is not desired, the station shall return a DM response PDU to the remote station and remain in the link disconnected mode	5.3.7.2.4.1.2	203.2:M	Yes__ No__	
207.2.4.2	Information Transfer Phase	5.3.7.2.4.2	203.2:M	Yes__ No__	
207.2.4.2.a	After having sent the UA response PDU to an SABME command PDU or having received the UA response PDU to a sent SABME command PDU, the station shall accept and send I and S PDUs according to the procedures described in 5.3.7.2.5	5.3.7.2.4.2 and 5.3.7.2.5	203.2:M	Yes__ No__	

Downloaded from http://www.everyspec.com

APPENDIX B

Item	Protocol Feature	Reference	Status	Support	Notes
207.2.4.2.b	When receiving an SABME command PDU while in the information transfer phase, the station shall conform to the resetting procedure described in 5.3.7.2.6	5.3.7.2.4.2 and 5.3.7.2.6	203.2:M	Yes__ No__	
207.2.4.2.c	When receiving an RSET command PDU while in the information transfer phase, the station shall conform to the resetting procedure described in 5.3.7.2.7	5.3.7.2.4.2 and 5.3.7.2.7	203.2:M	Yes__ No__	
207.2.4.3	Data Link Disconnection Phase	5.3.7.2.4.3	203.2:M	Yes__ No__	
207.2.4.3.a	During the information transfer phase, either station shall be able to initiate disconnecting of the data link connection by sending a DISC command PDU and starting the acknowledgement timer	5.3.7.2.4.3 and 5.3.8.1.2.a	203.2:M	Yes__ No__	
207.2.4.3.b	When receiving a DISC command PDU, the station shall return a UA response PDU and enter the data link disconnected phase	5.3.7.2.4.3	203.2:M	Yes__ No__	
207.2.4.3.c	The return of the UA response PDU shall take precedence over any other response PDU that may be pending at the station for that data link connection	5.3.7.2.4.3	203.2:M	Yes__ No__	
207.2.4.3.d	Upon receipt of the UA or DM response PDU from a remote station, the station shall stop its acknowledgement timer for that link, and enter the link disconnected mode	5.3.7.2.4.3	203.2:M	Yes__ No__	

Downloaded from http://www.everyspec.com

APPENDIX B

Item	Protocol Feature	Reference	Status	Support	Notes
207.2.4.3.e	Should the acknowledgement timer run out before receiving the UA or DM response PDU for a particular link, the station shall send another DISC command PDU and restart the acknowledgement timer	5.3.7.2.4.3	203.2:M	Yes__ No__	
207.2.4.3.f	After sending the DISC command PDU N2 times, the sending station shall stop sending the DISC command PDU, shall enter the data link disconnected phase, and shall report to the higher layer for the appropriate error recovery action.	5.3.7.2.4.3 and 5.3.8.1.2.d	203.2:M	Yes__ No__	
207.2.4.4	Data Link Disconnected Phase	5.3.7.2.4.4	203.2:M	Yes__ No__	
207.2.4.4.a	After having received a DISC command PDU from the remote station and returned a UA response PDU, or having received the UA response PDU to a sent DISC command PDU, the station shall enter the data link disconnected phase	5.3.7.2.4.4	203.2:M	Yes__ No__	
207.2.4.4.b	In the disconnected phase, the station shall react to the receipt of an SABME command PDU, as described in 5.3.7.2.4.1, and shall send a DM response PDU in answer to a received DISC command PDU	5.3.7.2.4.4 and 5.3.7.2.4.1	203.2:M	Yes__ No__	
207.2.4.4.c	When receiving any other Type 2 command, I or S PDU, the station in the disconnected phase shall send a DM response PDU	5.3.7.2.4.4	203.2:M	Yes__ No__	
207.2.4.4.d	In the disconnected phase, the station shall be able to initiate a data link connection	5.3.7.2.4.4	203.2:M	Yes__ No__	
207.2.4.5	Contention of Unnumbered Mode-Setting Command PDUs	5.3.7.2.4.5	203.2:M	Yes__ No__	

Downloaded from http://www.everyspec.com

APPENDIX B

Item	Protocol Feature	Reference	Status	Support	Notes
207.2.4.5.a	A contention situation on a data link connection shall be resolved in the following way: If the sent and received mode-setting command PDUs are the same, each station shall send the UA response PDU at the earliest opportunity	5.3.7.2.4.5	203.2:M	Yes__ No__	
207.2.4.5.b	Each station shall enter the indicated phase either after receiving the UA response PDU, or after its acknowledgement timer expires	5.3.7.2.4.5	203.2:M	Yes__ No__	
207.2.4.5.c	If the sent and received mode-setting command PDUs are different, each station shall enter the data link disconnected phase and shall issue a DM response PDU at the earliest opportunity	5.3.7.2.4.5	203.2:M	Yes__ No__	
207.2.5	Procedures for Information Transfer	5.3.7.2.5	203.2:M	Yes__ No__	
207.2.5.1	Sending I PDUs	5.3.7.2.5.1	203.2:M	Yes__ No__	
207.2.5.1.a	When the station has an I PDU to send (that is, an I PDU not already sent), it shall send the I PDU with an N(S) equal to its current V(S) and an N(R) equal to its current V(R) for that data link connection	5.3.7.2.5.1	203.2:M	Yes__ No__	
207.2.5.1.b	At the end of sending the I PDU, the station shall increment its V(S) by 1	5.3.7.2.5.1	203.2:M	Yes__ No__	
207.2.5.1.c	If the acknowledgement timer is not running at the time that an I PDU is sent, the acknowledgement timer shall be started	5.3.7.2.5.1	203.2:M	Yes__ No__	

Downloaded from http://www.everyspec.com

APPENDIX B

Item	Protocol Feature	Reference	Status	Support	Notes
207.2.5.1.d	If the data link connection V(S) is equal to the last value of N(R) received plus k (where k is the maximum number of outstanding I PDUs), the station shall not send any new I PDUs on that data link connection, but shall be able to resend an I PDU	5.3.7.2.5.1, 5.3.8.1.2.e, 5.3.7.2.5.6 and 5.3.7.2.5.9	203.2:M	Yes__ No__	
207.2.5.1.e	Upon sending an I PDU that causes the number of outstanding I PDUs to be equal to the k2 value for that connection, the station shall send an RR (or RNR) command to the destination station	5.3.7.2.5.1	203.2:M	Yes__ No__	
207.2.5.1.f	The destination station shall respond with a RR Response with the N(R) indicating the last received I PDU	5.3.7.2.5.1	203.2:M	Yes__ No__	
207.2.5.1.g	When a local station on a data link connection is in the busy condition, the station shall still be able to send I PDUs, provided that the remote station on this data link connection is not also busy	5.3.7.2.5.1	203.2:M	Yes__ No__	
207.2.5.1.h	When the station is in the FRMR exception condition for a particular data link connection, it shall stop transmitting I PDUs on that data link connection	5.3.7.2.5.1	203.2:M	Yes__ No__	
207.2.5.1.i	When a station is in the timer recovery condition, it shall not send any new I PDUs on that data link connection	5.3.7.2.5.1 and 5.3.7.2.5.11	203.2:M	Yes__ No__	
207.2.5.2	Receiving I PDU	5.3.7.2.5.2	203.2:M	Yes__ No__	

Downloaded from http://www.everyspec.com

APPENDIX B

Item	Protocol Feature	Reference	Status	Support	Notes
207.2.5.2.a	When the station is not in a busy condition and receives an I PDU whose N(S) is equal to its V(R), the station shall accept the information field of this PDU, increment by 1 its V(R), and act as follows:	5.3.7.2.5.2	207.2.5.2:M	Yes__ No__	
207.2.5.2.a.1	If an I PDU is available to be sent, the station shall be able to act as in 5.3.7.2.5.1 and acknowledge the received I PDU by setting N(R) in the control field of the next sent I PDU to the value of its V(R). The station shall also be able to acknowledge the received I PDU by sending an RR PDU with the N(R) equal to the value of its V(R).	5.3.7.2.5.2.a and 5.3.7.2.5.1	207.2.5.2.a:O.<3>	Yes__ No__	
207.2.5.2.a.2	If no I PDU is available to be sent by the station, then the station shall either:	5.3.7.2.5.2.b	207.2.5.2.a:O.<3>	Yes__ No__	
207.2.5.2.a.2.a	If the received I PDU is a command PDU with the P-bit set to 1, then send an S PDU with its F-bit set to 1 and its N(R) equal to the current value of V(R) at the first possible opportunity (this transmission is time critical to maintaining the connection), and stop the Response Delay Timer	5.3.7.2.5.2.b(1)	207.2.5.2.a.2:O.<2>	Yes__ No__	
207.2.5.2.a.2.b	If the received I PDU is not a command PDU with the P-bit set to 1, then the station shall	5.3.7.2.5.2.b(2)	207.2.5.2.a.2:O.<2>	Yes__ No__	

Downloaded from http://www.everyspec.com

APPENDIX B

Item	Protocol Feature	Reference	Status	Support	Notes
207.2.5.2.a.2.b.1	If the number of outstanding I PDUs received since the last I PDU for which an acknowledgment was sent is equal to or greater than *k3*, then send an S PDU with its N(R) equal to the current value of V(R) at the earliest opportunity, and stop the Response Delay Timer	5.3.7.2.5.2.b(2)(a) and 5.3.8.1.2.g	207.2.5.2.a.2.b:O.<2>	Yes__ No__	
207.2.5.2.a.2.b.2	If the number of outstanding I PDUs received since the last I PDU for which an acknowledgment was sent is less than *k3*, and if the Response Delay Timer is not already running, then start the Response Delay Timer. When the Response Delay Timer is running then the station shall:	5.3.7.2.5.2.b(2)(b) and 5.3.8.1.2.g	207.2.5.2.a.2.b:O.<2>	Yes__ No__	
207.2.5.2.a.2.b.2(i)	If an I PDU is sent back to the originator of the recently received I PDU before the Response Delay Timer expires, then stop the Response Delay Timer. The N(R) in the outgoing I frame will acknowledge any recently received correct in sequence I PDU frames as described in 5.3.7.2.5.1 (No S PDU needs to be sent)	5.3.7.2.5.2.b(2)(b)(i) and 5.3.7.2.5.1	207.2.5.2.a.2.b.2:O.<3>	Yes__ No__	

Downloaded from http://www.everyspec.com

APPENDIX B

Item	Protocol Feature	Reference	Status	Support	Notes
207.2.5.2.a.2.b.2(ii)	If another PDU of any type that can be concatenated is transmitted to any destination and adequate space exists to concatenate additional frames, then concatenate onto this PDU an S PDU with its N(R) equal to the current value of V(R) addressed to the originator of the recently received I PDU, and stop the Response Delay Timer	5.3.7.2.5.2.b(2)(b)(ii)	207.2.5.2.a.2.b.2:O.<3>	Yes__ No__	
207.2.5.2.a.2.b.2(iii)	If the Response Delay Timer expires, then at the earliest opportunity, send an S PDU with its N(R) equal to the current value of V(R). (Note that S PDUs to other destinations may be concatenated with this frame as described in the preceding paragraph.)	5.3.7.2.5.2.b(2)(b)(iii)	207.2.5.2.a.2.b.2:O.<3>	Yes__ No__	
207.2.5.2.a.3	If receipt of the I PDU caused the station to go into the busy condition with regard to any subsequent I PDUs, the station shall send an RNR PDU with the N(R) equal to the value of its V(R). If I PDUs are available to send, the station shall be able to send them (as in 5.3.7.2.5.1) prior to or following the sending of the RNR PDU.	5.3.7.2.5.2.c and 5.3.7.2.5.1	207.2.5.2.a:O.<3>	Yes__ No__	
207.2.5.2.b	When the station is in a busy condition, the station shall be able to ignore the information field contained in any received I PDU on that data link connection	5.3.7.2.5.2 and 5.3.7.2.5.10	207.2.5.2:M	Yes__ No__	
207.2.5.3	Receiving Incorrect PDUs	5.3.7.2.5.3	203.2:M	Yes__ No__	

Downloaded from http://www.everyspec.com

APPENDIX B

Item	Protocol Feature	Reference	Status	Support	Notes
207.2.5.3.a	When the station receives an invalid PDU or a PDU with an incorrect source address, the entire PDU shall be discarded	5.3.7.2.5.3	203.2:M	Yes__ No__	
207.2.5.4	Receiving Out-of-Sequence PDUs	5.3.7.2.5.4	203.2:M	Yes__ No__	
207.2.5.4.a	When the station receives one or more I PDUs whose N(S)s are not in the expected sequence, that is, not equal to the current V(R) but is within the receive window, the station shall respond by sending a REJ or a SREJ PDU as described in either 5.3.7.2.5.4.1 or 5.3.7.2.5.4.2	5.3.7.2.5.4, 5.3.7.2.5.4.1 and 5.3.7.2.5.4.2	203.2:M	Yes__ No__	
207.2.5.4.1	Reject Response	5.3.7.2.5.4.1	203.2:M	Yes__ No__	
207.2.5.4.1.a	When an I PDU has been received out-of-sequence and more than one frame is missing, the station may discard the information field of the I PDU and send a REJ PDU with the N(R) set to the value of V(R). The station shall then discard the information field of all I PDUs until the expected I PDU is correctly received	5.3.7.2.5.4.1	203.2:M	Yes__ No__	
207.2.5.4.1.b	When receiving the expected I PDU, the station shall acknowledge the PDU	5.3.7.2.5.4.1 and 5.3.7.2.5.2	203.2:M	Yes__ No__	
207.2.5.4.1.c	The station shall use the N(R) and P-bit indications in the discarded I PDU	5.3.7.2.5.4.1	203.2:M	Yes__ No__	
207.2.5.4.1.d	On a given data link connection, only one “sent REJ” exception condition from a given station to another given station shall be established at a time	5.3.7.2.5.4.1	203.2:M	Yes__ No__	
207.2.5.4.1.e	A “sent REJ” condition shall be cleared when the requested I PDU is received	5.3.7.2.5.4.1	203.2:M	Yes__ No__	

Downloaded from http://www.everyspec.com

APPENDIX B

Item	Protocol Feature	Reference	Status	Support	Notes
207.2.5.4.1.f	The "sent REJ" condition shall be able to be reset when a REJ timer time-out function runs out	5.3.7.2.5.4.1	203.2:M	Yes__ No__	
207.2.5.4.1.g	When the station perceives by REJ timer time-out that the requested I PDU will not be received, because either the requested I PDU or the REJ PDU was in error or lost, the station shall be able to resend the REJ PDU up to N2 times to reestablish the "sent REJ" condition	5.3.7.2.5.4.1 and 5.3.8.1.2.d	203.2:M	Yes__ No__	
207.2.5.4.2	Selective Reject Response	5.3.7.2.5.4.2	203.2:M	Yes__ No__	
207.2.5.4.2.a	A SREJ PDU shall not be transmitted if an earlier REJ condition has not been cleared	5.3.7.2.5.4.2	203.2:M	Yes__ No__	
207.2.5.4.2.b	When the station perceives by the REJ timer time-out that the request I PDU will not be received, because either the requested I PDU or the SREJ PDU was in error or lost, the station shall be able to resend all outstanding SREJ PDUs in order to reestablish the "sent SREJ" condition up to N2 times	5.3.7.2.5.4.2 and 5.3.8.1.2.d	203.2:M	Yes__ No__	
207.2.5.5	Receiving Acknowledgement	5.3.7.2.5.5	203.2:M	Yes__ No__	
207.2.5.5.a	When correctly receiving an I or S PDU, even in the busy condition, the receiving station shall consider the N(R) contained in this PDU as an acknowledgement for all the I PDUs it has sent on this data link connection with an N(S) up to and including the received N(R) minus one	5.3.7.2.5.5 and 5.3.7.2.5.10	203.2:M	Yes__ No__	

Downloaded from http://www.everyspec.com

APPENDIX B

Item	Protocol Feature	Reference	Status	Support	Notes
207.2.5.5.b	The station shall reset the acknowledgement timer when it correctly receives an I or Type 2 S PDU with the N(R) higher than the last received N(R) (actually acknowledging some I PDUs)	5.3.7.2.5.5	203.2:M	Yes__ No__	
207.2.5.5.c	If the timer has been reset and there are outstanding I PDUs still unacknowledged on this data link connection, the station shall restart the acknowledgement timer	5.3.7.2.5.5	203.2:M	Yes__ No__	
207.2.5.5.d	If the timer then runs out, the station shall follow the procedures in 5.3.7.2.5.11 with respect to the unacknowledged I PDUs	5.3.7.2.5.5 and 5.3.7.2.5.11	203.2:M	Yes__ No__	
207.2.5.6	Receiving SREJ PDU	5.3.7.2.5.6	203.2:M	Yes__ No__	
207.2.5.6.a	If the received transmission is an SREJ command or response PDU, the I PDU corresponding to the N(R) being rejected shall be retransmitted	5.3.7.2.5.6	203.2:M	Yes__ No__	
207.2.5.7	Receiving RSET PDU	5.3.7.2.5.7	203.2:M	Yes__ No__	
207.2.5.7.a	Upon the receipt of the RSET command PDU, the receiving station shall reply with a UA response PDU and shall then set its V(R) to 0 for the initiating station	5.3.7.2.5.7	203.2:M	Yes__ No__	
207.2.5.8	Receiving REJ PDU	5.3.7.2.5.8	203.2:M	Yes__ No__	
207.2.5.8.a	When receiving an REJ PDU, the station shall set its V(S) to the N(R) received in the REJ PDU control field	5.3.7.2.5.8	203.2:M	Yes__ No__	
207.2.5.8.b	The station shall resend the corresponding I PDU as soon as it is available	5.3.7.2.5.8	203.2:M	Yes__ No__	

Downloaded from http://www.everyspec.com

APPENDIX B

Item	Protocol Feature	Reference	Status	Support	Notes
207.2.5.8.c	If other unacknowledged I PDUs had already been sent on that data link connection following the one indicated in the REJ PDU, then those I PDUs shall be resent by the station following the resending of the requested I PDU	5.3.7.2.5.8	203.2:M	Yes__ No__	
207.2.5.8.d	If retransmission beginning with a particular PDU occurs while waiting acknowledgement and an REJ PDU is received, which would also start retransmission with the same I PDU [as identified by the N(R) in the REJ PDU], the retransmission resulting from the REJ PDU shall be inhibited	5.3.7.2.5.8 and 5.3.7.2.5.11	203.2:M	Yes__ No__	
207.2.5.9	Receiving RNR PDU	5.3.7.2.5.9	203.2:M	Yes__ No__	
207.2.5.9.a	A station receiving an RNR PDU shall, with one exception described below, stop sending I PDUs on the indicated data link connection at the earliest possible time and shall start the busy-state timer, if not already running. **EXCEPTION**: A station may include a busy destination in a PDU that is addressed to multiple destination addresses if at least one of the multiple destinations is not busy.	5.3.7.2.5.9	203.2:M	Yes__ No__	
207.2.5.9.b	When the busy-state timer runs out, the station shall follow the procedure described in 5.3.7.2.5.11	5.3.7.2.5.9 and 5.3.7.2.5.11	203.2:M	Yes__ No__	

Downloaded from http://www.everyspec.com

APPENDIX B

Item	Protocol Feature	Reference	Status	Support	Notes
207.2.5.9.c	In any case, the station shall not send any other I PDUs on that data link connection before receiving an RR or REJ PDU, or before receiving an I response PDU with the F-bit set to 1, or before the completion of a resetting procedure on that data link connection	5.3.7.2.5.9	203.2:M	Yes__ No__	
207.2.5.10	Station-Busy Condition	5.3.7.2.5.10	203.2:M	Yes__ No__	
207.2.5.10.a	A station shall enter the busy condition on a data link connection when it is temporarily unable to receive or continue to receive I PDUs due to internal constraints	5.3.7.2.5.10	203.2:M	Yes__ No__	
207.2.5.10.b	When the station enters the busy condition, it shall send an RNR PDU at the first possible opportunity	5.3.7.2.5.10	203.2:M	Yes__ No__	
207.2.5.10.c	It shall be possible to send I PDUs waiting to be sent on that data link connection prior to or following the sending of the RNR PDU	5.3.7.2.5.10	203.2:M	Yes__ No__	
207.2.5.10.d	While in the busy condition, the station shall accept and process supervisory PDUs and return an RNR response PDU with the F-bit set to 1 if it receives an S or I command PDU with the P-bit set to 1 on the affected data link connection	5.3.7.2.5.10	203.2:M	Yes__ No__	

Downloaded from http://www.everyspec.com

APPENDIX B

Item	Protocol Feature	Reference	Status	Support	Notes
207.2.5.10 .e	To indicate the clearance of a busy condition on a data link connection, the station shall send an I response PDU with the F-bit set to 1 if a P-bit set to 1 is outstanding, an REJ response PDU, or an RR response PDU on the data link connection with N(R) set to the current V(R), depending on whether or not the station discarded information fields of correctly received I PDUs	5.3.7.2.5.10	203.2:M	Yes__ No__	
207.2.5.10 .f	The sending of a SABME command PDU or a UA response PDU shall indicate the clearance of a busy condition at the sending station on a data link connection	5.3.7.2.5.10	203.2:M	Yes__ No__	
207.2.5.11	Waiting Acknowledgement	5.3.7.2.5.11	203.2:M	Yes__ No__	
207.2.5.11 .a	The station maintains an internal retransmission count variable for each data link connection, which shall be set to 0 when the station receives or sends a UA response PDU to a SABME command PDU, when the station receives an RNR PDU, or when the station correctly receives an I or S PDU with the N(R) higher than the last received N(R) (actually acknowledging some outstanding I PDUs)	5.3.7.2.5.11	203.2:M	Yes__ No__	
207.2.5.11 .b	If the acknowledgement timer, busy-state timer, or the P-bit timer runs out, the station on this data link connection shall enter the timer recovery condition and add 1 to its retransmission count variable	5.3.7.2.5.11	203.2:M	Yes__ No__	

Downloaded from http://www.everyspec.com

APPENDIX B

Item	Protocol Feature	Reference	Status	Support	Notes
207.2.5.11 .c	When a station is in the timer recovery condition, the station shall not send any new I PDUs to the destination station	5.3.7.2.5.11	203.2:M	Yes__ No__	
207.2.5.11 .d	The station shall then start the P-bit timer and send an S command PDU with the P-bit set to 1	5.3.7.2.5.11	203.2:M	Yes__ No__	
207.2.5.11 .e	The timer recovery condition shall be cleared on the data link connection when the station receives a valid I or S PDU from the remote station with the F-bit set to 1	5.3.7.2.5.11	203.2:M	Yes__ No__	
207.2.5.11 .f	If, while in the timer recovery condition, the station correctly receives a valid I or S PDU with one of the following:	5.3.7.2.5.11	203.2:M	Yes__ No__	
207.2.5.11 .f.1	The F-bit set to 1 and the N(R) within the range from the last value of N(R) received to the current V(S) inclusive, the station shall clear the timer recovery condition, set its V(S) to the received N(R), stop the P-bit timer, and resend any unacknowledged PDUs	5.3.7.2.5.11.a	207.2.5.11.f: O.<2>	Yes__ No__	
207.2.5.11 .f.2	The P/F bit set to 0 and the N(R) within the range from the last value of N(R) received to the current V(S) inclusive, the station shall not clear the timer recovery condition but shall treat the N(R) value received as an acknowledgment for the indicated previously transmitted I PDUs	5.3.7.2.5.11.b and 5.3.7.2.5.5	207.2.5.11.f: O.<2>	Yes__ No__	
207.2.5.11 .g	If the P-bit timer runs out in the timer recovery condition, the station shall add 1 to its retransmission count variable	5.3.7.2.5.11	203.2:M	Yes__ No__	

Downloaded from http://www.everyspec.com

APPENDIX B

Item	Protocol Feature	Reference	Status	Support	Notes
207.2.5.11.h	If the retransmission count variable is less than N2, the station shall resend an S PDU with the P-bit set to 1 and restarts its P-bit timer	5.3.7.2.5.11 and 5.3.8.1.2.d	203.2:M	Yes__ No__	
207.2.5.11.i	If the retransmission count variable is equal to N2, the station shall initiate a resetting procedure, by sending a SABME command PDU	5.3.7.2.5.11, 5.3.8.1.2.d and 5.3.7.2.6	203.2:M	Yes__ No__	
207.2.6	Procedures for Mode Resetting	5.3.7.2.6	203.2:M	Yes__ No__	
207.2.6.a	The resetting phase shall apply only during ABM	5.3.7.2.6	203.2:M	Yes__ No__	
207.2.6.b	Either station shall be able to initiate a resetting of both directions by sending a SABME command PDU and starting its acknowledgement timer	5.3.7.2.6	203.2:M	Yes__ No__	
207.2.6.1	Receiver Action	5.3.7.2.6.1	203.2:M	Yes__ No__	
207.2.6.1.a	After receiving a SABME command PDU, the station shall return one of two types of responses, at the earliest opportunity: 5.3.7.2.6.1.a or 5.3.7.2.6.1.b	5.3.7.2.6.1	203.2:M	Yes__ No__	
207.2.6.1.a.1	A UA response PDU and reset its V(S) and V(R) to 0 to reset the data link connection	5.3.7.2.6.1.a	207.2.6.1.a:O .<2>	Yes__ No__	
207.2.6.1.a.2	A DM response PDU if the data link connection is to be terminated	5.3.7.2.6.1.b	207.2.6.1.a:O .<2>	Yes__ No__	
207.2.6.1.b	The return of the UA or DM response PDU shall take precedence over any other response PDU for that data link connection that may be pending at the station	5.3.7.2.6.1	203.2:M	Yes__ No__	
207.2.6.1.c	It shall be possible to follow the UA PDU with additional PDUs, if pending	5.3.7.2.6.1	203.2:M	Yes__ No__	
207.2.6.2	Initiator Action	5.3.7.2.6.2	203.2:M	Yes__ No__	

Downloaded from http://www.everyspec.com

APPENDIX B

Item	Protocol Feature	Reference	Status	Support	Notes
207.2.6.2.a	If the UA PDU is received correctly by the initiating station, it shall reset its V(S) and V(R) to 0 and stop its acknowledgement timer	5.3.7.2.6.2	203.2:M	Yes__ No__	
207.2.6.2.b	This shall also clear all exception conditions that might be present at either of the stations involved in the reset	5.3.7.2.6.2	203.2:M	Yes__ No__	
207.2.6.2.c	The exchange shall also indicate clearance of any busy condition that may have been present at either station involved in the reset	5.3.7.2.6.2	203.2:M	Yes__ No__	
207.2.6.2.d	If a DM response PDU is received, the station shall enter the data link disconnected phase, shall stop its acknowledgement timer, and shall report to the higher layer for appropriate action	5.3.7.2.6.2	203.2:M	Yes__ No__	
207.2.6.2.e	If the acknowledgement timer runs out before a UA or DM response PDU is received, the SABME command PDU shall be resent and the acknowledgement timer shall be started	5.3.7.2.6.2	203.2:M	Yes__ No__	
207.2.6.2.f	After the timer runs out N2 times, the sending station shall stop sending the SABME command PDU, and shall enter the ADM, may report to the higher layer protocol and may initiate other error recovery actions	5.3.7.2.6.2 and 5.3.8.1.2.d	203.2:M	Yes__ No__	
207.2.6.2.g	Other Type 2 PDUs, with the exception of the SABME and DISC command PDUs, received by the station before completion of the reset procedure shall be discarded	5.3.7.2.6.2	203.2:M	Yes__ No__	
207.2.6.3	Resetting with the FRMR PDU	5.3.7.2.6.3	203.2:M	Yes__ No__	

Downloaded from http://www.everyspec.com

APPENDIX B

Item	Protocol Feature	Reference	Status	Support	Notes
207.2.6.3.a	Under certain FRMR exception conditions, it shall be possible for the initiating station, by sending a FRMR response PDU, to ask the remote station to reset the data link connection	5.3.7.2.6.3 and 5.3.7.2.8	203.2:M	Yes__ No__	
207.2.6.3.b	Upon receiving the FRMR response PDU (even during a FRMR exception condition), the remote station shall either initiate a resetting procedure, by sending a SABME or RSET command PDU, or initiate a disconnect procedure, by sending a DISC command PDU	5.3.7.2.6.3	203.2:M	Yes__ No__	
207.2.6.3.c	After sending an FRMR response PDU, the initiating station shall enter the FRMR exception condition	5.3.7.2.6.3	203.2:M	Yes__ No__	
207.2.6.3.d	The FRMR exception condition shall be cleared when the station receives or sends a SABME or DISC command PDU, DM response PDU or RSET command PDU	5.3.7.2.6.3	203.2:M	Yes__ No__	
207.2.6.3.e	Any other Type 2 command PDU received while in the FRMR exception condition shall cause the station to resend the FRMR response PDU with the same information field as originally sent	5.3.7.2.6.3	203.2:M	Yes__ No__	
207.2.6.3.f	In the FRMR exception condition, additional I PDUs shall not be sent, and received I and S PDUs shall be discarded by the station	5.3.7.2.6.3	203.2:M	Yes__ No__	
207.2.6.3.g	It shall be possible for the station to start its acknowledgement timer on the sending of the FRMR response PDU	5.3.7.2.6.3	203.2:M	Yes__ No__	

Downloaded from http://www.everyspec.com

APPENDIX B

Item	Protocol Feature	Reference	Status	Support	Notes
207.2.6.3.h	If the timer runs out before the reception of a SABME or DISC command PDU from the remote station, it shall be possible for the station to resend the FRMR response PDU and restart its acknowledgement timer	5.3.7.2.6.3	203.2:M	Yes__ No__	
207.2.6.3.i	After the acknowledgement timer has run out N2 times, the station shall reset the data link connection by sending a SABME command PDU	5.3.7.2.6.3 and 5.3.8.1.2.d	203.2:M	Yes__ No__	
207.2.6.3.j	When an additional FRMR response PDU is sent while the acknowledgement timer is running, the timer shall not be reset or restarted	5.3.7.2.6.3	203.2:M	Yes__ No__	
207.2.7	Procedures for Sequence Number Resetting	5.3.7.2.7	203.2:M	Yes__ No__	
207.2.7.a	The addressed station shall confirm acceptance of the RSET command by transmission of a UA response at the earliest opportunity	5.3.7.2.7	203.2:M	Yes__ No__	
207.2.7.b	Upon acceptance of this command, the addressed station V(R) shall be set to 0	5.3.7.2.7	203.2:M	Yes__ No__	
207.2.7.c	If the UA response is received correctly, the initialization station shall reset its V(S) to 0	5.3.7.2.7	203.2:M	Yes__ No__	
207.2.7.d	The RSET command shall reset all PDU rejection conditions in the addressed station, except for an invalid N(R) sequence number condition which the addressed station has reported by FRMR	5.3.7.2.7	203.2:M	Yes__ No__	
207.2.7.e	To clear an invalid N(R) frame rejection condition with an RSET command, the RSET command shall be transmitted by the station that detects the invalid N(R)	5.3.7.2.7	203.2:M	Yes__ No__	
207.2.8	FRMR Exception Conditions	5.3.7.2.8	203.2:M	Yes__ No__	

Downloaded from http://www.everyspec.com

APPENDIX B

Item	Protocol Feature	Reference	Status	Support	Notes
207.2.8.a	The station shall request a resetting procedure by sending an FRMR response PDU, after receiving, during the information transfer phase, a PDU with one of the conditions identified in 5.3.6.2.3.6	5.3.7.2.8, 5.3.7.2.6.3 and 5.3.6.2.3.6	203.2:M	Yes__ No__	
207.2.8.b	The other station shall initiate a resetting procedure by sending a SABME or RSET command PDU, after receiving the FRMR response PDU	5.3.7.2.8 and 5.3.7.2.6	203.2:M	Yes__ No__	
207.3	Description of Type 4 Procedures	5.3.7.3	203.4:M	Yes__ No__	
207.3.1	Modes of Operation	5.3.7.3.1	203.4:M	Yes__ No__	
207.3.1.a	A station using Type 4 procedures shall support the entire set whenever it is operational on the network	5.3.7.3.1	203.4:M	Yes__ No__	
207.3.2	Procedure for Addressing	5.3.7.3.2	203.4:M	Yes__ No__	
207.3.2.a	The address field shall be used to indicate the source and destinations of the transmitted PDU	5.3.7.3.2	203.4:M	Yes__ No__	
207.3.2.b	The first bit in the source address shall be used to identify whether a command or a response is contained in the PDU	5.3.7.3.2	203.4:M	Yes__ No__	
207.3.2.c	Individual, group, and global addressing shall be supported for the destination addresses in command PDUs	5.3.7.3.2	203.4:M	Yes__ No__	
207.3.2.d	The source address shall contain an individual address	5.3.7.3.2	203.4:M	Yes__ No__	
207.3.3	Procedure for Using the P/F Bit	5.3.7.3.3	X	---	
207.3.4	Procedures for Logical Data Link Set-up and Disconnection	5.3.7.3.4	203.4:M	Yes__ No__	
207.3.4.a	All stations shall advance to the information transfer rate	5.3.7.3.4	203.4:M	Yes__ No__	
207.3.5	Procedures for Information Transfer	5.3.7.3.5	203.4:M	Yes__ No__	

Downloaded from http://www.everyspec.com

APPENDIX B

Item	Protocol Feature	Reference	Status	Support	Notes
207.3.5.1	Sending DIA Command Frames	5.3.7.3.5.1	203.4:M	Yes__ No__	
207.3.5.2	DRNR Procedure	5.3.7.3.5.2	203.4:M	Yes__ No__	
207.3.5.2.1	Sending DRNR Command PDU	5.3.7.3.5.2.1	203.4:M	Yes__ No__	
207.3.5.2.2	Receiving DRNR Command PDU	5.3.7.3.5.2.2	203.4:M	Yes__ No__	
207.3.5.2.2.a	Upon receipt of a DRNR PDU a station shall, with one exception described below, inhibit transmission of DIA PDUs to the station which originated the DRNR command by updating the station status table to reflect this busy condition. **EXCEPTION**: A station may include a busy destination in a PDU that is addressed to multiple destination addresses if at least one of the multiple destinations is not busy	5.3.7.3.5.2.2	203.4:M	Yes__ No__	
207.3.5.2.2.b	The DRNR PDU shall not change the Quiet Mode status of a station	5.3.7.3.5.2.2	203.4:M	Yes__ No__	
207.3.5.2.2.c	Any PDUs in the retransmission queue addressed to the busy station shall be modified to delete (null) the busy station from the destination address list	5.3.7.3.5.2.2	203.4:M	Yes__ No__	
207.3.5.2.2.d	Normal transmission of DIA PDUs to that station shall resume upon receipt of a DRR command from the station	5.3.7.3.5.2.2	203.4:M	Yes__ No__	
207.3.5.2.3	Sending DRNR Response PDU	5.3.7.3.5.2.3	203.4:M	Yes__ No__	
207.3.5.2.3.a	A station shall generate and transmit a DRNR response PDU after it has sent a DRNR command PDU (if its Quiet Mode is disabled) while it is processing frames in its receive queues in the busy condition	5.3.7.3.5.2.3	203.4:M	Yes__ No__	

Downloaded from http://www.everyspec.com

APPENDIX B

Item	Protocol Feature	Reference	Status	Support	Notes
207.3.5.2.4	Receiving DRNR Response PDU	5.3.7.3.5.2.4	203.4:M	Yes__ No__	
207.3.5.2.4.a	Upon receipt of a DRNR response PDU, a station shall search the destination addresses associated with the identification number in the DRNR response PDU	5.3.7.3.5.2.4	203.4:M	Yes__ No__	
207.3.5.2.4.b	The response PDU originator's address shall be deleted from the destination address field (if it is still there) of the DIA being acknowledged	5.3.7.3.5.2.4	203.4:M	Yes__ No__	
207.3.5.3	DRR Procedures	5.3.7.3.5.3	203.4:M	Yes__ No__	
207.3.5.3.1	Sending a DRR PDU	5.3.7.3.5.3.1	203.4:M	Yes__ No__	
207.3.5.3.1.a	A station shall generate and transmit a DRR PDU if its Quiet Mode is disabled and one of the following conditions exist:	5.3.7.3.5.3.1	203.4:M	Yes__ No__	
207.3.5.3.1.a.1	The station is no longer busy and had previously sent a DRNR command PDU	5.3.7.3.5.3.1.a	207.3.5.3.1.a: O.<3>	Yes__ No__	
207.3.5.3.1.a.2	The station is not busy and the station received a DIA PDU from a transmitting station which requires acknowledgement	5.3.7.3.5.3.1.b	207.3.5.3.1.a: O.<3>	Yes__ No__	
207.3.5.3.1.a.3	If directed by the user interface	5.3.7.3.5.3.1.c	207.3.5.3.1.a: O.<3>	Yes__ No__	
207.3.5.3.1.1	Sending a DRR Command PDU	5.3.7.3.5.3.1.1	203.4:M	Yes__ No__	
207.3.5.3.1.2	Sending a DRR Response PDU	5.3.7.3.5.3.1.2	203.4:M	Yes__ No__	
207.3.5.3.2	Receiving DRR Response PDU	5.3.7.3.5.3.2	203.4:M	Yes__ No__	

Downloaded from http://www.everyspec.com

APPENDIX B

Item	Protocol Feature	Reference	Status	Support	Notes
207.3.5.3.2.a	Upon receipt of a DRR response PDU a station shall search the destination addresses associated with the identification number in the DRR response PDU	5.3.7.3.5.3.2	203.4:M	Yes__ No__	
207.3.5.3.2.b	The DRR response PDU originator's address shall be deleted from the destination address field of the DIA being acknowledged	5.3.7.3.5.3.2	203.4:M	Yes__ No__	

A.5.8 Data Link Initialization

Item	Protocol Feature	Reference	Status	Support	Notes
208	Data Link Initialization	5.3.8	M	Yes__ No__	
208.a	The Join Request is sent to the default NETCON destination address, which shall be the station assigned to perform NETCON station responsibilities	5.3.8	O	Yes__ No__	
208.1	List of Data Link Parameters	5.3.8.1	M	Yes__ No__	
208.1.a	The maximum number of octets in the information field of a UI, I or DIA PDU is an adjustable data link parameter in the range of 708 – 3345	5.3.8.1	M	Yes__ No__	
208.1.1	Type 1 Logical Data Link Parameters	5.3.8.1.1	M	Yes__ No__	
208.1.1.a	The logical data link parameters for Type 1 operation shall be as follows:	5.3.8.1.1	M	Yes__ No__	

Downloaded from http://www.everyspec.com

APPENDIX B

Item	Protocol Feature	Reference	Status	Support	Notes
208.1.1.a.1	The acknowledgement timer is a data link parameter that shall define the timeout period (TP) during which the sending station shall expect an acknowledgement from a specified destination station. The acknowledgment timer should not be activated until the corresponding PDU has been transmitted.	5.3.8.1.1.a	M	Yes__ No__	
208.1.1.a.2	TP shall take into account any delay introduced by the physical sublayer. The value of TP is described in Appendix C (C.4.3).	5.3.8.1.1.a and C.4.3	M	Yes__ No__	
208.1.1.a.3	The busy-state timer is a data link parameter that defines the time interval following receipt of the URNR command PDU during which the station shall wait for the other station to clear the busy condition. Default value is 120 seconds.	5.3.8.1.1.b	M	Yes__ No__	
208.1.1.a.4	N4 is a data link parameter that indicates the maximum number of times that an UI or TEST command PDU is retransmitted by a station trying to accomplish a successful information exchange. Normally, N4 is set large enough to overcome the loss of a PDU due to link error conditions. The maximum number of times that a PDU is retransmitted following the expiration of the acknowledgment timer is established at protocol initialization. This value is in the range of 0 through 5 and defaults to 2. The retransmission of PDUs may be overridden by the Quiet Mode parameter, which is described in 5.3.11.2.	5.3.8.1.1.c and 5.3.11.2	M	Yes__ No__	

Downloaded from http://www.everyspec.com

APPENDIX B

Item	Protocol Feature	Reference	Status	Support	Notes
208.1.1.a.4	The minimum-length valid data link PDU shall contain 2 flags, 2 addresses, one 8-bit control field, and the FCS. The minimum number of octets in a valid data link PDU shall be 9.	5.3.8.1.1.d	M	Yes__ No__	
208.1.2	Type 2 Logical Data Link Parameters	5.3.8.1.2	203.2:M	Yes__ No__	
208.1.2.a	The logical data link connection parameters for Type 2 operation shall be as follows:	5.3.8.1.2	208.1.2:M	Yes__ No__	
208.1.2.a.1	The acknowledgement timer is a data link connection parameter that shall define the time interval during which the station shall expect to receive acknowledgement to one or more outstanding I PDUs or an expected response to a sent U command PDU. The acknowledgment timer should not be activated until the corresponding PDU has been transmitted. Time values are established at protocol initialization and are in the range of 10 to 1800 seconds in one-second increments. Default is 120 seconds.	5.3.8.1.2.a	203.2:M	Yes__ No__	

Downloaded from http://www.everyspec.com

APPENDIX B

Item	Protocol Feature	Reference	Status	Support	Notes
208.1.2.a.2	The P-bit timer is a data link connection parameter that defines the time interval during which the station shall expect to receive a frame with the F-bit set to 1 in response to a sent Type 2 command with the P-bit set to 1. The P-bit timer should not be activated until the corresponding PDU has been transmitted. Time values are established at protocol initialization and are in the range of 10 to 60 seconds in increments of 1 second. Default is 10 seconds.	5.3.8.1.2.b	203.2:M	Yes__ No__	
208.1.2.a.3	The REJ timer is a data link connection parameter that defines the time interval during which the station shall expect to receive a reply to a sent REJ or SREJ PDU. The REJ timer value shall be equal to or less than twice the acknowledgment timer. The REJ timer should not be activated until the corresponding PDU has been transmitted.	5.3.8.1.2.c	203.2:M	Yes__ No__	

Downloaded from http://www.everyspec.com

APPENDIX B

Item	Protocol Feature	Reference	Status	Support	Notes
208.1.2.a.4	N2 is a data link connection parameter that indicates the maximum number of times that a PDU (including the S command PDU that is sent as a result of the acknowledgment P-bit or REJ timer expiring) is sent, following the running out of the acknowledgment timer, the P-bit timer, or the REJ timer. The maximum number of times that a PDU is retransmitted following the expiration of the timers is established at protocol initialization. This value is in the range of 0 through 5 and defaults to 2. The retransmission of PDUs may be overridden by the Quiet Mode parameter, which is described in 5.3.11.2.	5.3.8.1.2.d and 5.3.11.2	203.2:M	Yes__ No__	
208.1.2.a.5	The maximum number (*k*) of sequentially numbered I PDUs that the sending station may have outstanding (i.e. unacknowledged) on a single data link connection simultaneously. The value of this parameter is in the range 1 through 127. (This value of this parameter may be established through the use of the Type 2 *k* Window field of an XNP message as described in Appendix E, "Type 2 Parameters".)	5.3.8.1.2.e and Appendix E	203.2:M	Yes__ No__	

Downloaded from http://www.everyspec.com

APPENDIX B

Item	Protocol Feature	Reference	Status	Support	Notes
208.1.2.a.6	The maximum number (*k2*) of outstanding (i.e. unacknowledged) I PDUs that can be sent by a source station on a data link connection before the station requests acknowledgment. When this threshold is reached the sending station sends an S PDU that both acknowledges received I frames and causes an S PDU to be sent in return to acknowledge outstanding I PDUs. The value of this parameter is in the range 1 through 127, but would normally be less than or equal to the value of parameter *k*.	5.3.8.1.2.f	203.2:M	Yes__ No__	
208.1.2.a.7	The maximum number (*k3*) of correct in sequence I PDUs received on a data link connection since the last I PDU received on the data link connection was acknowledged. When this threshold is reached the receiving station generates an S PDU to acknowledge received frames. The value of this parameter is in the range 1 through 127, but would normally be less than or equal to the value of parameter *k*.	5.3.8.1.2.g	203.2:M	Yes__ No__	

Downloaded from http://www.everyspec.com

APPENDIX B

Item	Protocol Feature	Reference	Status	Support	Notes
208.1.2.a.8	The amount of time, as a percent of Type 2 Acknowledgment Timer seconds, that a station waits after an I PDU Response or an I PDU Command with its P-bit set to 0 is received until it is acknowledged by transmission of an S PDU in the case that no other frames are available for transmission. The value of this parameter is in the range of 0 - 99%. (The value of this parameter may be established by the Type 2 Acknowledgment Timer and Response Timer fields of an XNP Parameter Update message as described in Appendix E, "Type 2 Parameters" or from the Protocol Parameters Table.)	5.3.8.1.2.h and Appendix E	203.2:M	Yes__ No__	
208.1.2.a.9	A minimum-length valid data link PDU shall contain exactly 2 flags, 2 address fields, 1 control field and the FCS. Thus, the minimum number of octets in a valid data link PDU shall be 9 or 10, depending on whether the PDU is a U PDU, or an I or S PDU, respectively.	5.3.8.1.2.i	203.2:M	Yes__ No__	
208.1.3	Type 4 Logical Data Link Parameters	5.3.8.1.3	203.4:M	Yes__ No__	
208.1.3.a	The logical data link parameters for Type 4 operation shall be as follows:	5.3.8.1.3	208.1.3:M	Yes__ No__	
208.1.3.a.1	The T1 timer is the maximum time a station shall wait for an acknowledgment of a transmitted DIA PDU before that PDU is retransmitted	5.3.8.1.3.a	203.4:M	Yes__ No__	
208.1.3.a.2	The value of T1 shall be in the range of 5-120 seconds in increments of 0.2 seconds	5.3.8.1.3.a	203.4:M	Yes__ No__	
208.1.3.a.3	Each DIA PDU transmitted shall be assigned a T1 timer	5.3.8.1.3.a	203.4:M	Yes__ No__	

Downloaded from http://www.everyspec.com

APPENDIX B

Item	Protocol Feature	Reference	Status	Support	Notes
208.1.3.a.4	When the T1 timer expires for DIA PDU, that DIA PDU shall be retransmitted in the next transmission opportunity for that precedence, assuming the N2 count has not been reached	5.3.8.1.3.a	203.4:M	Yes__ No__	
208.1.3.a.5	DIA PDUs with only one destination will be discarded if the destination replied with a DRNR or DRR response PDU	5.3.8.1.3.a	203.4:M	Yes__ No__	
208.1.3.a.6	If the DIA PDU is multi-addressed, the receive station is removed (nulled) from the destination address field	5.3.8.1.3.a	203.4:M	Yes__ No__	
208.1.3.a.7	This timer shall be paused whenever the net is busy with voice. This timer is resumed when voice transmission has completed.	5.3.8.1.3.a	203.4:M	Yes__ No__	
208.1.3.a.8	The N2 parameter shall indicate the maximum number of retransmission attempts to complete the successful transmission of a DIA PDU	5.3.8.1.3.b	203.4:M	Yes__ No__	
208.1.3.a.9	The value of N2 shall be the maximum retransmit value (range = 0-5)	5.3.8.1.3.b	203.4:M	Yes__ No__	
208.1.3.a.10	The value of *k* indicates the maximum number of DIA PDUs that a station may have outstanding (awaiting acknowledgment) to all stations at any given time. The value of *k* ranges from 5 - 20 DIA PDUs.	5.3.8.1.3.c	203.4:M	Yes__ No__	
208.1.3.a.11	A minimum-length valid data link PDU shall contain exactly 2 flags, 2 address fields, one (1) 16-bit control field, and the FCS	5.3.8.1.3.d	203.4:M	Yes__ No__	
208.1.3.a.12	The minimum number of octets in a valid data link PDU shall be 10	5.3.8.1.3.d	203.4:M	Yes__ No__	

Downloaded from http://www.everyspec.com

Item	Protocol Feature	Reference	Status	Support	Notes
208.1.3.a.13	The number of Type 4 DIA frames remembered in the list used to detect and discard duplicates. The number in the list can range from 0 - 255. The value of "0" is used to turn off this detect capability.	5.3.8.1.3.e	203.4:M	Yes__ No__	

A.5.9 Frame Transfer

Item	Protocol Feature	Reference	Status	Support	Notes
209	Frame Transfer	5.3.9	M	Yes__ No__	
209.a	The data link layer shall request the transmission of a frame by the PL	5.3.9	M	Yes__ No__	
209.1	PDU Transmission	5.3.9.1	M	Yes__ No__	
209.1.a	PDUs shall be queued for transmission in such a manner that the highest precedence PDUs are transmitted before lower precedence PDUs	5.3.9.1	M	Yes__ No__	
209.1.b	If a prioritized net access scheme is active, the precedence access level used shall be the precedence of the PDU that is to be transmitted next	5.3.9.1	M	Yes__ No__	
209.1.c	Transmission units of the same precedence shall be in FIFO order	5.3.9.1	M	Yes__ No__	
209.1.d	Type 2 I PDUs for a particular connection shall be transmitted in the order of their sequence numbers	5.3.9.1	203.2:M	Yes__ No__	
209.2	Data Link Concatenation	5.3.9.2	M	Yes__ No__	
209.2.a	All receiving stations shall be able to de-concatenate the reception into separate PDUs	5.3.9.2	M	Yes__ No__	

Downloaded from http://www.everyspec.com

Item	Protocol Feature	Reference	Status	Support	Notes
209.2.b	Data link concatenation to add another interior data frame shall not be performed if the resulting frame would take longer to transmit than the maximum transmit time allowed for the network	5.3.9.2	M	Yes__ No__	
209.3	Physical Layer Concatenation	5.3.9.3	O	Yes__ No__	
209.3.a	The time to transmit the combined length of the transmission frame, shall not exceed the maximum transmit time allowed for the network	5.3.9.3	O	Yes__ No__	
209.3.b	The PL shall transmit each transmission unit following the complete PL procedures with no additional bits between Interior Transmission Units (except for bit synchronization when used in Asynchronous Mode)	5.3.9.3	O	Yes__ No__	
209.3.c	Note that the Phasing field shall precede the first Interior Transmission Unit only	5.3.9.3 and 5.2.1.2	O	Yes__ No__	
209.4	PDU Transmissions	5.3.9.4	M	Yes__ No__	
209.4.a	The PDU that did not allow concatenation shall be at the head of its appropriate queue for the next net access period	5.3.9.4	M	Yes__ No__	
209.4.b	If the first PDU in the highest precedence level queue (or only queue) does not allow concatenation, it shall be the only PDU transmitted in that net access period	5.3.9.4	M	Yes__ No__	

A.5.10 Flow Control

Item	Protocol Feature	Reference	Status	Support	Notes
210	Flow Control	5.3.10	M	Yes__ No__	

Downloaded from http://www.everyspec.com

APPENDIX B

Item	Protocol Feature	Reference	Status	Support	Notes
210.1	Type 1 Flow Control	5.3.10.1	M	Yes__ No__	
210.2	Type 2 Flow Control	5.3.10.2	203.2:M	Yes__ No__	
210.2.a	The maximum number (k) of sequentially numbered I PDUs that may be outstanding (that is, unacknowledged) at any given time is a data link connection parameter, which shall never exceed 127	5.3.10.2	203.2:M	Yes__ No__	
210.3	Type 4 Flow Control	5.3.10.3	203.4:M	Yes__ No__	

A.5.11 Acknowledgement and Response

Item	Protocol Feature	Reference	Status	Support	Notes
211	Acknowledgement and Response	5.3.11	M	Yes__ No__	
211.a	All UI, DIA or I PDUs that require an acknowledgement shall be acknowledged except for the following cases:	5.3.11	203.3:M 203.2:M 203.4:M	Yes__ No__ Yes__ No__ Yes__ No__	
211.a.1	The control field of the received PDU specifies that no acknowledgment is required	5.3.11.a	203.3:M 203.2:M 203.4:M	Yes__ No__ Yes__ No__ Yes__ No__	
211.a.2	The Quiet Mode (described in 5.3.11.2), has been set to ON	5.3.11.b and 5.3.11.2	203.3:M 203.2:M 203.4:M	Yes__ No__ Yes__ No__ Yes__ No__	
211.a.3	The receiving station is a group (including global) addressee only	5.3.11.c	203.3:M 203.2:M 203.4:M	Yes__ No__ Yes__ No__ Yes__ No__	
211.a.4	The receiving station's individual address is not in the address field	5.3.11.d	203.3:M 203.2:M 203.4:M	Yes__ No__ Yes__ No__ Yes__ No__	
211.a.5	The PDU is invalid	5.3.11.e	203.3:M 203.2:M 203.4:M	Yes__ No__ Yes__ No__ Yes__ No__	
211.1	Acknowledgement	5.3.11.1	M	Yes__ No__	
211.1.1	Type 1 Acknowledgement	5.3.11.1.1	M	Yes__ No__	

Downloaded from http://www.everyspec.com

APPENDIX B

Item	Protocol Feature	Reference	Status	Support	Notes
211.1.1.a	Each PDU, with the P-bit set to 1, shall be responded to before another PDU is transmitted	5.3.11.1.1	M	Yes__ No__	
211.1.1.b	All UI and TEST command PDUs that have the P-bit set to 1 shall be acknowledged	5.3.11.1.1	M	Yes__ No__	
211.1.1.c	The RHD procedures shall be followed by all stations on the network to allow each responding station an interval in which they can transmit their response	5.3.11.1.1 and C.4.2	M	Yes__ No__	
211.1.2	Type 2 Acknowledgement	5.3.11.1.2	203.2:M	Yes__ No__	
211.1.2.a	Type 2 PDUs that require acknowledgment shall activate the acknowledgment timer	5.3.11.1.2	203.2:M	Yes__ No__	
211.1.3	Type 4 Acknowledgement	5.3.11.1.3	203.4:M	Yes__ No__	
211.1.3.a	The DIA PDU shall activate the acknowledgement timer	5.3.11.1.3	203.4:M	Yes__ No__	
211.2	Quiet Mode	5.3.11.2	M	Yes__ No__	
211.2.a	The protocol shall allow an operator to initiate Quite Mode as an override feature that, when invoked, prevents any transmission (including retransmission) without explicit permission from the operator	5.3.11.2	M	Yes__ No__	
211.2.b	As a security feature, the operator shall be able to turn off automatic transmission but still continue to receive	5.3.11.2	M	Yes__ No__	
211.2.c	Normal protocol exchange shall occur when the Quiet Mode is OFF	5.3.11.2	M	Yes__ No__	
211.2.d	The Quiet Mode shall override the Maximum Number of Retransmissions data link parameters	5.3.11.2	M	Yes__ No__	

Downloaded from http://www.everyspec.com

Item	Protocol Feature	Reference	Status	Support	Notes
211.2.e	UI, I or DIA PDUs received by a station with Quiet Mode ON shall be serviced in the normal way except nothing will be returned nor queued for later transmission	5.3.11.2	M	Yes__ No__	
211.3	Immediate Retransmission	5.3.11.3	O	Yes__ No__	
211.3.a	The sending station shall not include the special address 3 in its TP calculation and shall schedule any necessary retransmissions during the longer TP experienced by other stations	5.3.11.3	O	Yes__ No__	

A.5.12 Invalid Frame

Item	Protocol Feature	Reference	Status	Support	Notes
212	Invalid Frame	5.3.12	M	Yes__ No__	
212.a	A frame is invalid if it has one or more of the following characteristics:	5.3.12	M	Yes__ No__	
212.a.1	Frame not bounded by a beginning and ending flag	5.3.12.a	M	Yes__ No__	
212.a.2	Frame is too short if it is < 9 bytes	5.3.12.b	M	Yes__ No__	
212.a.3	Frame is too long if it is > the maximum PDU length	5.3.12.c and 5.3.8.1	M	Yes__ No__	
212.a.4	Frame has an invalid address or control field	5.3.12.d	M	Yes__ No__	
212.a.5	Frame has an FCS error	5.3.12.e	M	Yes__ No__	
212.b	Any invalid frame shall be discarded	5.3.12	M	Yes__ No__	

A.5.13 Retransmission

Item	Protocol Feature	Reference	Status	Support	Notes
213	Retransmission	5.3.13	M	Yes__ No__	

Downloaded from http://www.everyspec.com

Item	Protocol Feature	Reference	Status	Support	Notes
213.a	The default number of retransmissions is 2, but the data link layer protocol may be initialized to automatically retransmit 0 to 5 times	5.3.13	M	Yes__ No__	
213.b	If the Quiet Mode is ON, no automatic retransmissions shall be made	5.3.13	M	Yes__ No__	

A.5.14 Error Detection and Correction

Item	Protocol Feature	Reference	Status		Support		Notes
214	Error Detection and Correction	5.3.14	102.1.3.1:M 102.1.3.2:M 102.1.3.3:X		Yes__ No__ Yes__ No__ No		
214.a	If selected, the FEC process shall be used to encode the data link frame of 5.3.4	5.3.14 and 5.3.4	Send: 214:O	Recv: 214: M	Send: Yes__ No__	Recv: Yes__ No__	
214.b	If selected, the TDC process shall be applied to the FEC-encoded data link frame and to the fill bits	5.3.14	Send: 214:O	Recv: 214: M	Send: Yes__ No__	Recv: Yes__ No__	
214.c	Three modes of EDC shall be supported: FEC OFF, FEC ON with TDC, and FEC ON without TDC (NOTE: FEC ON without TDC may be used when the transmission channel provides the TDC capability)	5.3.14	Send: 214:O	Recv: 214: M	Send: Yes__ No__	Recv: Yes__ No__	
214.1	Forward-Error-Correction Coding (not used in packet mode)	5.3.14.1	Send: 214:O	Recv: 214: M	Send: Yes__ No__	Recv: Yes__ No__	
214.1.a	When FEC is selected, the Golay (24,12) cyclic block code, described in detail in Appendix F, shall be used for FEC	5.3.14.1 and Appendix F	Send: 214:O	Recv: 214: M	Send: Yes__ No__	Recv: Yes__ No__	
214.1.b	The generator polynomial to obtain the 11 check bits shall be $g(x) = x^{11} + x^{10} + x^6 + x^5 + x^4 + x^2 + 1$ where g(x) is a factor of $x^{23} + 1$	5.3.14.1	Send: 214:O	Recv: 214: M	Send: Yes__ No__	Recv: Yes__ No__	

Downloaded from http://www.everyspec.com

APPENDIX B

Item	Protocol Feature	Reference	Status		Support		Notes
214.2	FEC Preprocessing	5.3.14.2	Send: 214:O	Recv: 214: M	Send: Yes__ No__	Recv: Yes__ No__	
214.2.a	When FEC is selected, data bits shall be divided into a sequence of 12-bit segments for Golay encoding	5.3.14.2	Send: 214:O	Recv: 214: M	Send: Yes__ No__	Recv: Yes__ No__	
214.2.b	The total number of 12-bit segments shall be an integral number	5.3.14.2	Send: 214:O	Recv: 214: M	Send: Yes__ No__	Recv: Yes__ No__	
214.2.c	If FEC/TDC is selected and a coupled acknowledgment of Type 1 URR, URNR and TEST Response frames with their F-bit set is being transmitted, the coupled acknowledgment frame shall be duplicated and then data link concatenated to the end of the original coupled acknowledgment frame. This shall not be applied when the four octets addressing, described in 5.3.4.2.2.1.2, is used.	5.3.14.2	Send: 214:O	Recv: 214: M	Send: Yes__ No__	Recv: Yes__ No__	
214.2.d	If the data bits do not divide into an integral number of 12-bit segments, after coupled acknowledgment duplication (as appropriate), then from 1 to 11 zeros (0's) shall be added at the end to form an integral number of 12-bit segments	5.3.14.2	Send: 214:O	Recv: 214: M	Send: Yes__ No__	Recv: Yes__ No__	
214.3	Time-Dispersive Coding	5.3.14.3	Send: 214:O	Recv: 214: M	Send: Yes__ No__	Recv: Yes__ No__	
214.3.a	When TDC is selected, data shall be formatted into a sequence of TDC blocks composed of sixteen 24-bit Golay (24,12) codewords (that is, there are 384 FEC-encoded bits per TDC block)	5.3.14.3	Send: 214:O	Recv: 214: M	Send: Yes__ No__	Recv: Yes__ No__	

Downloaded from http://www.everyspec.com

Item	Protocol Feature	Reference	Status		Support		Notes
214.3.b	Each TDC block shall contain a total of 16 FEC codewords	5.3.14.3	Send: 214:O	Recv: 214: M	Send: Yes__ No__	Recv: Yes__ No__	
214.3.c	If the last TDC block of a message contains less than 16 FEC codewords, fill codewords shall be added to complete the TDC block	5.3.14.3	Send: 214:O	Recv: 214: M	Send: Yes__ No__	Recv: Yes__ No__	
214.3.d	These 24-bit fill codewords shall be created by Golay-encoding an alternating sequence of 12-bit data words, with the first word composed of 12 ones followed by a word composed of 12 zeros	5.3.14.3	Send: 214:O	Recv: 214: M	Send: Yes__ No__	Recv: Yes__ No__	
214.3.e	The fill codewords shall alternate until the TDC block is filled	5.3.14.3	Send: 214:O	Recv: 214: M	Send: Yes__ No__	Recv: Yes__ No__	
214.3.f	The TDC block shall be structured into a 16 x 24 matrix (the Golay codewords appear as rows)	5.3.14.3	Send: 214:O	Recv: 214: M	Send: Yes__ No__	Recv: Yes__ No__	
214.3.g	Each TDC block matrix shall be rotated to form a 24 x 16 matrix	5.3.14.3	Send: 214:O	Recv: 214: M	Send: Yes__ No__	Recv: Yes__ No__	
214.3.h	At the receiver, the TDC-encoded bit stream shall be structured into a 24 x 16 matrix	5.3.14.3	Send: 214:O	Recv: 214: M	Send: Yes__ No__	Recv: Yes__ No__	
214.3.i	Each received TDC block matrix shall be rotated to form the original 16 x 24 matrix	5.3.14.3	Send: 214:O	Recv: 214: M	Send: Yes__ No__	Recv: Yes__ No__	
214.3.j	The TDC decoder at the receiver shall perform the inverse of the TDC encoding process	5.3.14.3	Send: 214:O	Recv: 214: M	Send: Yes__ No__	Recv: Yes__ No__	

A.5.15 Data Scrambling

Item	Protocol Feature	Reference	Status	Support	Notes
215	Data Scrambling	5.3.15	102.1.3.1:O 102.1.3.2:O 102.1.3.3:X	Yes__ No__ Yes__ No__ No	

Downloaded from http://www.everyspec.com

APPENDIX B

Item	Protocol Feature	Reference	Status	Support	Notes
215.a	Data scrambling shall be performed if the transmission medium does not have a DC response and there is the possibility that "long" strings of the NRZ ones and zeros are transmitted	5.3.15	215:M	Yes__ No__	
215.b	CCITT V.36 scrambling shall not be applied outside the FEC because bit errors at the receiver will be extended	5.3.15.b	215:M	Yes__ No__	
215.c	If CCITT V.36 scrambling/descrambling is used, the contents of the 20-state shift register shall be initialized to all ones prior to scrambling or descrambling data link frames in each interior transmission unit	5.3.15.b	O	Yes__ No__	
215.d	The adverse state detector (ASD) counter shall be initialized such that at least 32-bits will have been counted, starting from the first bit input to the 20-state shift register, when the first adverse state is detected	5.3.15.b	O	Yes__ No__	
215.e	The operation of the scrambling/descrambling shall be as shown	5.3.15.b	O	Yes__ No__	

A.5.16 Data Link Layer Interactions

Item	Protocol Feature	Reference	Status	Support	Notes
216	Data Link Layer Interactions	5.3.16	O	Yes__ No__	
216.a	DL Unitdata Request parameters	5.3.16.a	O	Yes__ No__	
216.b	DL-Unitdata Indication parameters	5.3.16.b	O	Yes__ No__	
216.c	DL-Status Indication parameters	5.3.16.b	O	Yes__ No__	

Downloaded from http://www.everyspec.com

Item	Protocol Feature	Reference	Status	Support	Notes
216.c.1	Topology Update ID, in a DL-Unitdata Request, shall contain the most recent Topology Update ID sent from the upper layer	5.3.16.c(4)	O	Yes__ No__	
216.c.2	Topology Update ID, in a DL-Unitdata Indication, shall contain the Topology Update Identifier field from the Transmission Header	5.3.16.c(4)	O	Yes__ No__	
216.c.3	Precedence levels in the network layer shall be mapped as shown in Table VII	5.3.16.c(5)(a)	O	Yes__ No__	

A.6 Network Layer DPRL

Item	Protocol Feature	Reference	Status	Support	Notes
301	Intranet Protocol	5.4.1	M	Yes__ No__	
302	Subnetwork Dependent Convergence Function (SNDCF)	5.4.2	M	Yes__ No__	

A.6.1 Intranet Protocol

Item	Protocol Feature	Reference	Status	Support	Notes
301	Intranet Protocol	5.4.1	M	Yes__ No__	
301.1	Intranet Header	5.4.1.1	M	Yes__ No__	
301.1.a	The Version Number, Message Type, Intranet Header Length (HLEN) and Type of Service fields shall be present in all Intranet Headers	5.4.1.1	M	Yes__ No__	
301.1.b	When optional intranet relaying is being utilized all fields shall be present in the Intranet Header as appropriate based on the topology of the network	5.4.1.1	M	Yes__ No__	

Downloaded from http://www.everyspec.com

APPENDIX B

Item	Protocol Feature	Reference	Status	Support	Notes
301.1.c	The Intranet Header shall be exchanged using UI, I, and/or DIA PDUs	5.4.1.1	M	Yes__ No__	
301.1.1	Version	5.4.1.1.1	M	Yes__ No__	
301.1.1.a	The version number shall indicate which version of the intranet protocol is being used. The current value is 0.	5.4.1.1.1	M	Yes__ No__	
301.1.2	Message Types	5.4.1.1.2	M	Yes__ No__	
301.1.2.a	Systems using MIL-STD-188-220 shall not be required to use all the upper layer protocols indicated in the message type field	5.4.1.1.2	M	Yes__ No__	
301.1.2.b	Intranet Acknowledgement shall be message type 1	5.4.1.1.2	M	Yes__ No__	
301.1.2.c	Topology Update shall be message type 2	5.4.1.1.2	M	Yes__ No__	
301.1.2.d	Topology Update Request shall be message type 3	5.4.1.1.2	M	Yes__ No__	
301.1.2.e	IP Packets shall be message type 4	5.4.1.1.2	M	Yes__ No__	
301.1.2.f	ARP/RARP shall be message type 5	5.4.1.1.2.1	M	Yes__ No__	
301.1.2.f.1	All systems shall be able to respond to an ARP request in accordance with RFC 826	5.4.1.1.2.1	M	Yes__ No__	
301.1.2.f.2	For hardware type (ar&hrd) = 22 (CNR), the source hardware address (ar$sha) field shall contain the data link address	5.4.1.1.2.1 and 5.3.4.2.2	M	Yes__ No__	
301.1.2.f.3	The hardware address length (ar$hln) field value (specifying the number of octets in the hardware address field) shall be set to one octet when the net is configured for 7-bit addressing or to four octets when the net is configured for 32 bit addressing	5.4.1.1.2.1	M	Yes__ No__	
301.1.2.g	XNP shall be message type 6	5.4.1.1.2.2 and Appendix E	M	Yes__ No__	

Downloaded from http://www.everyspec.com

APPENDIX B

Item	Protocol Feature	Reference	Status	Support	Notes
301.1.2.h	MIL-STD-2045-47001 Header shall be message type 7	5.4.1.1.2.3	M	Yes__ No__	
301.1.2.i	Reserved Message Types shall be message types 0, 8, and 9.	5.4.1.1.2	M	Yes__ No__	
301.1.2.j	Segmentation/Reassembly shall be message type 10	5.4.1.1.2	M	Yes__ No__	
301.1.3	Intranet Header Length	5.4.1.1.3	M	Yes__ No__	
301.1.3.a	The HLEN shall be the number of octets in the intranet header only. The minimum length is 3 octets.	5.4.1.1.3	M	Yes__ No__	
301.1.4	Type of Service	5.4.1.1.4	M	Yes__ No__	
301.1.5	Message Identification Number	5.4.1.1.5	301.1.b:M	Yes__ No__	
301.1.5.a	The message identification number shall be a number, 0-255, assigned by the originating hosts	5.4.1.1.5	301.1.5:M	Yes__ No__	
301.1.6	Maximum Hop Count	5.4.1.1.6	301.1.b:M	Yes__ No__	
301.1.6.a	The maximum hop count shall be the maximum number of times this intranet packet can be relayed on the radio net	5.4.1.1.6	301.1.6:M	Yes__ No__	
301.1.6.b	If the maximum hop count is decremented to 0, the intranet packet shall not be forwarded any further, however it shall be processed locally if applicable	5.4.1.1.6	301.1.6:M	Yes__ No__	
301.1.7	Destination/Relay Status Byte	5.4.1.1.7	301.1.b:M	Yes__ No__	
301.1.7.a	The Destination/Relay Status Byte shall provide intranet routing information for each destination and/or relay address	5.4.1.1.7	301.1.7:M	Yes__ No__	
301.1.7.1	Distance	5.4.1.1.7.1	301.1.7:M	Yes__ No__	
301.1.7.2	REL	5.4.1.1.7.2	301.1.7:M	Yes__ No__	
301.1.7.3	Relay Type	5.4.1.1.7.3 and Appendix I	301.1.7:M	Yes__ No__	
301.1.7.4	DES	5.4.1.1.7.4	301.1.7:M	Yes__ No__	
301.1.7.5	ACK	5.4.1.1.7.5	301.1.7:M	Yes__ No__	
301.1.7.5.1	Receiving ETE Intranet ACK	5.4.1.1.7.5.1	301.1.7:M	Yes__ No__	

Downloaded from http://www.everyspec.com

APPENDIX B

Item	Protocol Feature	Reference	Status	Support	Notes
301.1.7.5.1.a	When a node receives an Intranet Packet with the ACK bit set, it shall return an Intranet Acknowledgement packet at the first possible opportunity	5.4.1.1.7.5.1	301.1.7:M	Yes__ No__	
301.1.7.5.1.b	The Intranet Acknowledgement packet shall have the same Message Identification Number as the received Intranet Packet	5.4.1.1.7.5.1	301.1.7:M	Yes__ No__	
301.1.7.5.1.c	The path specified in the Intranet Acknowledgement packet shall be the reverse path specified in the received Intranet Packet	5.4.1.1.7.5.1	301.1.7:M	Yes__ No__	
301.1.7.5.1.d	The Intranet Acknowledgement packet shall specify exactly one destination, namely the originator of the received Intranet Packet	5.4.1.1.7.5.1	301.1.7:M	Yes__ No__	
301.1.7.5.2	ETE Intranet ACK Timeout	5.4.1.1.7.5.2	301.1.7:M	Yes__ No__	
301.1.7.5.2.a	When a node sends an intranet packet with the ACK bit set, it shall start its ETE acknowledgement timer	5.4.1.1.7.5.2	301.1.7:M	Yes__ No__	
301.1.7.5.2.b	The ETE acknowledgement timer is an intranet parameter that defines the period within which a sending station shall expect an acknowledgement from the destination(s)	5.4.1.1.7.5.2	301.1.7:M	Yes__ No__	
301.1.7.5.2.c	The value of the ETE acknowledgement timer shall be a fixed factor plus a factor proportional to the number of hops required for all destinations to receive the packet	5.4.1.1.7.5.2	301.1.7:M	Yes__ No__	
301.1.7.5.2.d	The default value for the fixed factor shall be 20 seconds	5.4.1.1.7.5.2	301.1.7:M	Yes__ No__	

Downloaded from http://www.everyspec.com

APPENDIX B

Item	Protocol Feature	Reference	Status	Support	Notes
301.1.7.5.2.e	The default value for the proportional factor shall be twice the value of the DL acknowledgement timer, multiplied by the number of hops to the furthest destination	5.4.1.1.7.5.2	301.1.7:M	Yes__ No__	
301.1.7.5.2.f	The maximum value for the ETE Intranet Acknowledgement Timer shall be 10 minutes (600 seconds)	5.4.1.1.7.5.2	301.1.7:M	Yes__ No__	
301.1.7.5.3	Receiving an Intranet Acknowledgement Packet	5.4.1.1.7.5.3	301.1.7:M	Yes__ No__	
301.1.7.5.3.a	When an Intranet Acknowledgement Packet is received, that destination shall be removed from the list of destinations from which an acknowledgement is required	5.4.1.1.7.5.3	301.1.7:M	Yes__ No__	
301.1.7.5.4	Expiration of the ETE Intranet ACK Timer	5.4.1.1.7.5.4	301.1.7:M	Yes__ No__	
301.1.7.5.4.a	When the ETE acknowledgement timer expires, the sending station shall retry the transmission of the Intranet packet	5.4.1.1.7.5.4	301.1.7:M	Yes__ No__	
301.1.7.5.4.b	The number of retries shall be a value between 1 and 4, with a default of 2	5.4.1.1.7.5.4	301.1.7:M	Yes__ No__	
301.1.7.5.4.c	If only one path exists to a destination, that path shall be used until either the acknowledgement is received or the maximum number of Intranet retransmissions is exhausted	5.4.1.1.7.5.4	301.1.7:M	Yes__ No__	
301.1.7.5.4.d	The retransmitted packet shall have a recreated Intranet Header with the same TOS field and Message Identification Number	5.4.1.1.7.5.4	301.1.7:M	Yes__ No__	
301.1.7.5.4.e	The Intranet Header shall be recreated to specify the new path to the destination	5.4.1.1.7.5.4	301.1.7:M	Yes__ No__	

Downloaded from http://www.everyspec.com

APPENDIX B

Item	Protocol Feature	Reference	Status	Support	Notes
301.1.7.5.4.f	The recreated Intranet Header shall not specify paths to nodes that have already acknowledged the message	5.4.1.1.7.5.4	301.1.7:M	Yes__ No__	
301.1.7.5.4.g	This recreated Intranet Header shall not specify paths to nodes from which an acknowledgment is not required	5.4.1.1.7.5.4	301.1.7:M	Yes__ No__	
301.1.7.5.4.h	This recreated Intranet Header shall include paths to all nodes from which an acknowledgment is required, but from which an acknowledgement has not yet been received	5.4.1.1.7.5.4	301.1.7:M	Yes__ No__	
301.1.8	Originator Address	5.4.1.1.8	301.1.b:M	Yes__ No__	
301.1.8.a	The originator address shall be the link layer address of the originating node	5.4.1.1.8	301.1.8:M	Yes__ No__	
301.1.8.b	The four octets of address space shall be preceded by a single octet 32-bit marker subfield, as per 5.3.4.2.2.2	5.4.1.1.8 and 5.3.4.2.2.2	301.1.8:M	Yes__ No__	
301.1.9	Destination/Relay Address	5.4.1.1.9	301.1.b:M	Yes__ No__	
301.1.9.a	The intranet destination/relay address shall be the link layer address	5.4.1.1.9	301.1.9:M	Yes__ No__	
301.1.9.b	The four octets of address space shall be preceded by a single octet 32-bit marker subfield, as per 5.3.4.2.2.2	5.4.1.1.9 and 5.3.4.2.2.2	301.1.9:M	Yes__ No__	
301.2	Topology Update	5.4.1.2	O	Yes__ No__	
301.2.1	Topology Update Length	5.4.1.2.1	301.2:M	Yes__ No__	
301.2.1.a	Topology Update Length shall not exceed the MTU minus 8 octets	5.4.1.2.1	301.2:M	Yes__ No__	
301.2.2	Topology Update ID	5.4.1.2.2	301.2:M	Yes__ No__	
301.2.2.a	The Topology Update ID for the first topology update generated shall be 1	5.4.1.2.2	301.2:M	Yes__ No__	

Downloaded from http://www.everyspec.com

APPENDIX B

Item	Protocol Feature	Reference	Status	Support	Notes
301.2.3	Node Address	5.4.1.2.3	301.2:M	Yes__ No__	
301.2.4	Node Status Byte	5.4.1.2.4	301.2:M	Yes__ No__	
301.2.4.1	Link Quality	5.4.1.2.4.1	301.2.4:M	Yes__ No__	
301.2.4.2	Hop Length	5.4.1.2.4.2	301.2.4:M	Yes__ No__	
301.2.4.3	NR	5.4.1.2.4.3	301.2.4:M	Yes__ No__	
301.2.4.4	Quiet	5.4.1.2.4.4	301.2.4:M	Yes__ No__	
301.2.5	Node Predecessor Address	5.4.1.2.5	301.2:M	Yes__ No__	
301.3	Topology Update Request Message	5.4.1.3	301.2:M	Yes__ No__	
301.3.a	The maximum hop count and distance field shall be set to 1	5.4.1.3	301.2:M	Yes__ No__	
301.3.b	The Relay, Relay Type and ACK bit shall be always zero (0)	5.4.1.3	301.2:M	Yes__ No__	
301.3.c	The DES bit shall be always 1	5.4.1.3	301.2:M	Yes__ No__	
301.3.d	The destination address in the Intranet Header shall be the link layer address to which this request has been made	5.4.1.3	301.2:M	Yes__ No__	
301.4	Intranet Layer Interactions	5.4.1.4	O	Yes__ No__	
301.4.1	IL Unitdata Request parameters	5.4.1.4.a	O	Yes__ No__	
301.4.2	IL - Unitdata Indication parameters	5.4.1.4.b	O	Yes__ No__	
301.4.3	IL - Status Indication parameters	5.4.1.4.b	O	Yes__ No__	
301.4.3.a	Precedence shall be mapped from the TOS field	5.4.1.4.c.3(a) and 5.4.1.1.4	301.4.3:M	Yes__ No__	
301.4.3.b	The other Quality of Service parameters shall be mapped from the TOS field	5.4.1.4.c.3(b) and 5.4.1.1.4	301.4.3:M	Yes__ No__	
301.4.3.c	The ETE intranet acknowledgement procedures shall be used when R=1, and relaying is used to deliver the message to any destination of the packet	5.4.1.4.c.3(c) and 5.4.1.1.7.5	301.4.3:M	Yes__ No__	

Downloaded from http://www.everyspec.com

A.6.2 Subnetwork Dependent Convergence Function (SNDCF)

Item	Protocol Feature	Reference	Status	Support	Notes
302	Subnetwork Dependent Convergence Function (SNDCF)	5.4.2	M	Yes__ No__	
302.a	If the IP protocol implementation does not provide the required information through an inter-layer interaction, the SNDCF shall examine the IP header fields to "learn" the destinations and TOS	5.4.2	302:M	Yes__ No__	
302.1	Determine Destination Function	5.4.2.1	M	Yes__ No__	
302.2	Address Mapping Function	5.4.2.2	M	Yes__ No__	
302.3	TOS Function	5.4.2.3	M	Yes__ No__	
302.4	Intranet Send Request	5.4.2.4	M	Yes__ No__	

A.7 Appendixes

Item	Protocol Feature	Reference	Status	Support	Notes
401	Abbreviations and Acronyms	Appendix A	X	---	
402	Profile	Appendix B	M	Yes__ No__	
403	Network Access Control Algorithm (NAC)	Appendix C	M	Yes__ No__	
404	Communications Security Standards	Appendix D	O	Yes__ No__	
405	CNR Management Process	Appendix E	O	Yes__ No__	
406	Golay Coding Algorithm	Appendix F	102.1.3.1:M 102.1.3.2:M 102.1.3.3:X	Yes__ No__ Yes__ No__ No	
407	Packet Construction and Bit Ordering	Appendix G	M	Yes__ No__	
408	Intranet Topology Update	Appendix H	301.2:M	Yes__ No__	
409	Source Directed Relay	Appendix I	301.1.a:M	Yes__ No__	
410	Robust Communications Protocol	Appendix J	102.1.3.4:M	Yes__ No__	
411	Bose-Chaudhuri-Hocquenghem (15, 7) Coding Algorithm	Appendix K	102.1.3.4:M	Yes__ No__	

Downloaded from http://www.everyspec.com

Item	Protocol Feature	Reference	Status	Support	Notes
412	Transmission Channel Interfaces	Appendix L	M	Yes__ No__	

A.7.2 Network Access Control Algorithm (NAC)

Item	Protocol Feature	Reference	Status	Support	Notes
403	Network Access Control Algorithm (NAC)	Appendix C	M	Yes__ No__	
403.1	Network Timing Model	C.3	M	Yes__ No__	
403.1.a	The network access control protocol shall be used to detect the presence of active transmissions on a multiple-subscriber-access communications network and shall provide a means to preclude data transmissions from conflicting on the network	C.3	M	Yes__ No__	
403.1.b	All stations on a network shall use the same network access control protocol and timing parameter values in order to maintain network discipline	C.3	M	Yes__ No__	
403.1.1	Network Timing Model Definitions	C.3.1	M	Yes__ No__	
403.1.2	Network Timing Model Parameters	C.3.2	M	Yes__ No__	
403.1.2.1	Equipment Preamble Time (EPRE)	C.3.2.1	M	Yes__ No__	
403.1.2.2	Phasing Transmission Time (PHASING)	C.3.2.2	M	Yes__ No__	
403.1.2.2.a	PHASING is the time the DTE shall send an alternating sequence of one and zero bits after the completion of EPRE and prior to sending the first bit of DATA	C.3.2.2	M	Yes__ No__	
403.1.2.2.b	The DTE shall use the DCE bit rate to compute the number of PHASING bits to transmit	C.3.2.2	M	Yes__ No__	
403.1.2.3	Data Transmission Time (DATA)	C.3.2.3	M	Yes__ No__	

Downloaded from http://www.everyspec.com

APPENDIX B

Item	Protocol Feature	Reference	Status	Support	Notes
403.1.2.3.a	DATA shall begin immediately after the end of PHASING	C.3.2.3	M	Yes__ No__	
403.1.2.3.b	The transmitting DTE shall indicate end of transmission immediately after the last bit of data is sent to the DCE	C.3.2.3	M	Yes__ No__	
403.1.2.4	Coupled Acknowledgement Transmission Time (S)	C.3.2.4	M	Yes__ No__	
403.1.2.4.a	For these frames, the length of the fields (including zero bit insertion) used in network timing equations when the Multi-Dwell protocol and convolutional coding are not used shall be:	C.3.2.4	M	Yes__ No__	
403.1.2.4.a.1	The 64-bit message synchronization field	C.3.2.4.a	M	Yes__ No__	
403.1.2.4.a.2	An optional embedded COMSEC MI field	C.3.2.4.b	M	Yes__ No__	
403.1.2.4.a.3	The 168-bit TWC and Transmission Header TDC block	C.3.2.4.c	M	Yes__ No__	
403.1.2.4.a.4	80 bits if neither the FEC nor TDC function is selected, 168 bits if only FEC is selected, and 384 bits if both FEC and TDC are selected	C.3.2.4.d	M	Yes__ No__	
403.1.2.5	Equipment Lag Time (ELAG)	C.3.2.5	M	Yes__ No__	
403.1.2.6	Turnaround Time (TURN)	C.3.2.6	M	Yes__ No__	
403.1.2.7	DTE ACK Preparation Time (DTEACK)	C.3.2.7	M	Yes__ No__	
403.1.2.8	DTE Processing Time (DTEPROC)	C.3.2.8	M	Yes__ No__	
403.1.2.9	DTE Turnaround Time (DTETURN)	C.3.2.9	M	Yes__ No__	
403.1.2.9.a	DTETURN shall have a fixed value of 10 milliseconds	C.3.2.9	M	Yes__ No__	
403.1.2.10	Tolerance Time (TOL)	C.3.2.10	M	Yes__ No__	
403.1.2.10.a	SALT shall be less than or equal to the receiving DCE and transmitting DCE pair with the smallest delay in the network	C.3.2.10	M	Yes__ No__	

Downloaded from http://www.everyspec.com

APPENDIX B

Item	Protocol Feature	Reference	Status	Support	Notes
403.1.2.10.b	If SALT is not known, then zero (0) shall be assumed	C.3.2.10	M	Yes__ No__	
403.2	Network Access Control	C.4	M	Yes__ No__	
403.2.a	The stations shall implement the following four basic NAC subfunctions:	C.4	M	Yes__ No__	
403.2.a.1	Network busy sensing	C.4.a	M	Yes__ No__	
403.2.a.2	Response hold delay (RHD)	C.4.b	M	Yes__ No__	
403.2.a.3	Timeout period (TP)	C.4.c	M	Yes__ No__	
403.2.a.4	Network access delay (NAD)	C.4.d	M	Yes__ No__	
403.2.1	Network Busy Sensing Function	C.4.1	M	Yes__ No__	
403.2.1.a	Network busy sensing for a data signal shall be provided	C.4.1	M	Yes__ No__	
403.2.1.1	Data network busy sensing	C.4.1.1	M	Yes__ No__	
403.2.1.1.a	When receiving a data transmission, network busy shall be detected within a fixed time	C.4.1.1	M	Yes__ No__	
403.2.1.1.b	Parameter B shall be used to compute this fixed time	C.4.1.1	M	Yes__ No__	
403.2.1.1.c	For synchronous mode B shall be less than or equal to (32/n) seconds	C.4.1.1	M	Yes__ No__	
403.2.1.1.d	For asynchronous mode B shall be less than or equal to (64/n) seconds	C.4.1.1	M	Yes__ No__	
403.2.1.1.e	For packet mode B shall be less than or equal to 250 milliseconds	C.4.1.1	M	Yes__ No__	
403.2.1.1.f	Upon detection of data network busy, the data link network busy indicator shall be set	C.4.1.1	M	Yes__ No__	
403.2.1.1.g	Setting the data link network busy indicator shall inhibit all message transmissions, including coupled response messages	C.4.1.1	M	Yes__ No__	

Downloaded from http://www.everyspec.com

APPENDIX B

Item	Protocol Feature	Reference	Status	Support	Notes
403.2.1.1.h	The data link network busy indicator shall be reset upon indication from the physical layer that neither voice nor digital data is being detected by the station	C.4.1.1	M	Yes__ No__	
403.2.1.2	Voice Network Busy Sensing	C.4.1.2	M	Yes__ No__	
403.2.1.2.a	If voice transmissions are not detected, this function shall report that the network is never busy due to a voice transmission	C.4.1.2	M	Yes__ No__	
403.2.1.2.b	Upon detection of voice network busy, the data link network busy indicator shall be set	C.4.1.2	M	Yes__ No__	
403.2.1.2.c	Setting the data link network busy indicator shall inhibit all message transmissions, including coupled response messages	C.4.1.2	M	Yes__ No__	
403.2.1.2.d	The data link network busy indicator shall be reset upon indication from the physical layer that neither voice nor digital data is being detected by the station	C.4.1.2	M	Yes__ No__	
403.2.1.3	Network Busy Detect Time	C.4.1.3	M	Yes__ No__	
403.2.1.3.a	The time allowed to detect data network busy shall be the same for all stations on the network	C.4.1.3	M	Yes__ No__	
403.2.1.3.b	The equation below shall be used as a default in cases where the MAC parameter table has not been updated to reflect actual measurements for specific device	C.4.1.3	M	Yes__ No__	
403.2.1.3.c	Where a communications device provides a signal to detect network busy earlier than the calculated parameter B value, the DTE shall interface to that signal	C.4.1.3	M	Yes__ No__	

Downloaded from http://www.everyspec.com

APPENDIX B

Item	Protocol Feature	Reference	Status	Support	Notes
403.2.1.3.d	Where the communication media does not provide special capabilities or these capabilities cannot be used by all stations on the network, the station shall examine received data to detect data network busy	C.4.1.3	M	Yes__ No__	
403.2.1.3.e	The time allowed to detect data network busy shall be given by the formula: Net_Busy_Detect_Time = EPRE + ELAG + B + TOL	C.4.1.3	M	Yes__ No__	
403.2.2	Response Hold Delay	C.4.2	M	Yes__ No__	
403.2.2.a	The individual RHD value to be used shall be determined by the position of the receiving station's individual or special address in the PDU destination portion of the address field	C.4.2	M	Yes__ No__	
403.2.2.b	The Reserved Address (0) in the destination portion of the address field shall be ignored	C.4.2	M	Yes__ No__	
403.2.2.c	When calculating an individual RHD value, the Reserved Address shall not be considered to occupy a position in the destination portion of the address field	C.4.2	M	Yes__ No__	
403.2.2.d	The RHD time shall start precisely at the end of ELAG	C.4.2	M	Yes__ No__	
403.2.2.e	All stations on a subnetwork shall use the same values in calculating RHD	C.4.2	M	Yes__ No__	
403.2.2.f	The RHD_0 period shall be calculated by the following formula: RHD_0 = EPRE + PHASING + S + ELAG + TURN + TOL	C.4.2	M	Yes__ No__	
403.2.2.g	The TP shall be calculated by all stations on the network/link as follows: TP = (j * RHD_0) + TOL + Maximum(DTEACK, TURN)	C.4.2	M	Yes__ No__	

Downloaded from http://www.everyspec.com

APPENDIX B

Item	Protocol Feature	Reference	Status	Support	Notes
403.2.2.h	The transmitting station shall not include special address 3 in the total for j, and the value of all non-integer variables (that is, RHD_0, TOL, and TURN) in the TP equation are rounded to the nearest one thousandth	C.4.2	M	Yes__ No__	
403.2.2.i	The individual addressed station's response hold delay (RHD_i) shall be calculated by $RHD_i = (i - 1) * RHD_0 +$ Maximum (DTEACK, TURN) + TOL	C.4.2	M	Yes__ No__	
403.2.3	Timeout Period	C.4.3	M	Yes__ No__	
403.2.3.a	TP is the time all stations shall wait before they can schedule the NAD	C.4.3	M	Yes__ No__	
403.2.3.b	The transmitting station shall wait to receive the anticipated Type 1 coupled acknowledgement response frame(s), if any, from all applicable addressed stations	C.4.3	M	Yes__ No__	
403.2.3.c	The parameter values used to compute TP shall be the same for all stations on a subnet unless immediate retransmission has been selected	C.4.3	M	Yes__ No__	
403.2.3.d	When immediate retransmission has been requested, the sending station shall compute the timeout period using only individual addresses and special addresses 1 and 2	C.4.3	M	Yes__ No__	
403.2.3.e	All receiving stations shall compute the timeout period using the individual addresses and special addresses 1, 2 and 3	C.4.3	M	Yes__ No__	
403.2.3.f	The TP time shall start precisely at the end of ELAG	C.4.3	M	Yes__ No__	

Downloaded from http://www.everyspec.com

APPENDIX B

Item	Protocol Feature	Reference	Status	Support	Notes
403.2.3.g	A retransmission of a Type 1 P-bit frame shall be executed whenever TP has been exceeded without expected acknowledgements having been received from all Type 1 individual and special destinations	C.4.3	M	Yes__ No__	
403.2.3.h	Prior to retransmission, the address field of the frame shall be modified to delete the destination station(s) that previously acknowledged the frame	C.4.3	M	Yes__ No__	
403.2.3.i	Operationally, TP shall be used as follows:	C.4.3	M	Yes__ No__	
403.2.3.i.1	Upon termination of a message transmission that requires an immediate response, the transmitting station shall set the TP timer	C.4.3.a	M	Yes__ No__	
403.2.3.i.2	If the transmitting station does not receive all the expected responses (TEST, URR, or URNR) within the TP, and if the number of transmissions is less than the Maximum Number of Transmissions data link parameter, the station shall retransmit the frame when it is the highest precedence frame to send	C.4.3.a	M	Yes__ No__	
403.2.3.i.3	For all stations, if a Type 1 (P-bit=0), Type 2 or Type 4 frame is received when a response-type frame is expected, the newly received frame shall be processed	C.4.3.a	M	Yes__ No__	
403.2.3.i.4	The RHD and TP timers shall not be suspended and the TP procedures in use for the Type 1 (P-bit=1) frame shall be continued	C.4.3.a	M	Yes__ No__	

Downloaded from http://www.everyspec.com

APPENDIX B

Item	Protocol Feature	Reference	Status	Support	Notes
403.2.3.i.5	Response procedures, if any, for the newly received frame shall commence after the conclusion of the ongoing TP procedures	C.4.3.a	M	Yes__ No__	
403.2.3.i.6	If the unexpected frame is a Type 1 (P-bit=1) frame the current TP procedure is aborted and the newly received Type 1 (P-bit=1) TP procedure shall be started	C.4.3.a	M	Yes__ No__	
403.2.3.i.7	After a station transmits or receives data that does not require a Type 1 coupled acknowledgment, and is not itself a Type 1 coupled acknowledgment, all stations except those using RE-NAD shall compute TP as: TP = Maximum(DTEPROC, TURN) + TOL	C.4.3.b	M	Yes__ No__	
403.2.3.i.8	Upon receiving a Type 1 coupled acknowledgement, a station shall determine whether it thinks a timeout period is already in progress	C.4.3.c	M	Yes__ No__	
403.2.3.i.9	If no timeout period is in progress, or if the acknowledgement contains an unexpected destination or source address, the receiving station shall compute TP using the following equation and shall start a timeout period precisely at the time the last bit of data for the Type 1 coupled acknowledgment was received. $TP = (15 * RHD_0) + TOL + TURN$ **NOTE:** RHD_0 is as defined in C.4.2	C.4.3.c	M	Yes__ No__	
403.2.4	Network Access Delay	C.4.4	M	Yes__ No__	

Downloaded from http://www.everyspec.com

APPENDIX B

Item	Protocol Feature	Reference	Status	Support	Notes
403.2.4.a	NAD is defined as the time a station with a message to send shall wait to send a frame after the TP timer has expired	C.4.4	M	Yes__ No__	
403.2.4.b	All transmissions, except the coupled acknowledgements, shall begin at the start of the next NAD slot	C.4.4	M	Yes__ No__	
403.2.4.c	Two of the access schemes, DAP-NAD and R-NAD, shall be available to all network participants using Synchronous Mode	C.4.4	M	Yes__ No__	
403.2.4.d	In all of the NAD schemes, if the TP timer is active, the stations with frames to transmit shall wait for the TP timer to expire before the NAD is started	C.4.4	M	Yes__ No__	
403.2.4.e	If the TP timer is not active, the station shall calculate its NAD using the proper NAD scheme for the network	C.4.4	M	Yes__ No__	
403.2.4.f	A station shall analyze a received frame to determine if a TP timer shall be set	C.4.4.a	M	Yes__ No__	
403.2.4.g	Any other pending frames for transmission shall be placed on hold	C.4.4.a	M	Yes__ No__	
403.2.4.h	If the received frame was not a UI or TEST frame with the poll bit set, a NAD value shall be computed and initiated after the TP timer expires	C.4.4.a	M	Yes__ No__	
403.2.4.i	An R-NAD or H-NAD value shall be calculated and initiated if the network busy status is clear	C.4.4.a	M	Yes__ No__	
403.2.4.j	If a station does not have a frame to transmit, it shall compute a NAD time using routine priority for its calculations	C.4.4.b	M	Yes__ No__	

Downloaded from http://www.everyspec.com

APPENDIX B

Item	Protocol Feature	Reference	Status	Support	Notes
403.2.4.k	If the NAD time arrives before a frame becomes available to transmit or frame(s) are not yet encoded for transmission, the station shall compute and use a new NAD time	C.4.4.b	M	Yes__ No__	
403.2.4.m	The starting time for the new NAD shall be the same as the starting time for the NAD that was just completed	C.4.4.b	M	Yes__ No__	
403.2.4.n	The F value used in computing the NAD shall be the sum of the F value used in the NAD just completed, plus a value dependent on the NAD in effect: R-NAD P-NAD H-NAD RE-NAD DAP-NAD	C.4.4.b	 403.2.4.1:M 403.2.4.2:M 403.2.4.3:M 403.2.4.4:X 403.2.4.5:M	 Yes__ No__ Yes__ No__ Yes__ No__ No Yes__ No__	
403.2.4.n.1	For P-NAD the F value shall be (NS + 1)	C.4.4.b.1	403.2.4.2:M	Yes__ No__	
403.2.4.n.2	For R-NAD the F value shall be [(3/4) * NS + 1]	C.4.4.b.2	403.2.4.1:M	Yes__ No__	
403.2.4.n.3	For H-NAD the F value shall be 1 if the station has an urgent or priority frame to transmit and (Routine_MAX + 1 – Routine_MIN) if a station has only a routine frame(s) or no frame(s) to transmit	C.4.4.b.3	403.2.4.3:M	Yes__ No__	
403.2.4.n.4	For DAP-NAD the F value shall be (NS)	C.4.4.b.5	403.2.4.5:M	Yes__ No__	
403.2.4.o	All stations on the network shall continue to sense the link for data or voice network busy and shall withhold transmission until the appropriate NAD period has expired	C.4.4.c	M	Yes__ No__	

Downloaded from http://www.everyspec.com

APPENDIX B

Item	Protocol Feature	Reference	Status	Support	Notes
403.2.4.p	NAD shall be calculated using the formula: NAD = F * Net_Busy_Detect_Time + Max(0, F-1) * DTETURN	C.4.4.c	M	Yes__ No__	
403.2.4.1	Random Network Access Delay	C.4.4.1	M	Yes__ No__	
403.2.4.1.a	The R-NAD calculation method shall ensure that each station has an equal chance of accessing the network	C.4.4.1	M	Yes__ No__	
403.2.4.1.b	The integer value of F shall be obtained from pseudorandom number generator	C.4.4.1	M	Yes__ No__	
403.2.4.1.c	F shall be an integer value (truncated) in a range between 0 and (3/4)NS	C.4.4.1	M	Yes__ No__	
403.2.4.2	Prioritized Network Access Delay	C.4.4.2	O	Yes__ No__	
403.2.4.2.a	The P-NAD calculation method shall ensure that the network access precedence order assigned to subscribers is preserved	C.4.4.2	403.2.4.2:M	Yes__ No__	
403.2.4.2.b	Each station shall calculate three unique P-NAD values, one for each of the three frame precedence levels	C.4.4.2	403.2.4.2:M	Yes__ No__	
403.2.4.2.c	The integer value of F shall be calculated as: F = SP + MP + IS	C.4.4.2	403.2.4.2:M	Yes__ No__	
403.2.4.3	Hybrid Network Access Delay	C.4.4.3	O	Yes__ No__	
403.2.4.3.a	The integer value of F shall be calculated as: F = MIN + RAND * (MAX – MIN)	C.4.4.3	403.2.4.3:M	Yes__ No__	
403.2.4.4	Radio Embedded Network Access Delay (RE-NAD)	C.4.4.4	O	Yes__ No__	
403.2.4.4.1	RE-NAD Media Access	C.4.4.4.1	403.2.4.4:M	Yes__ No__	

Downloaded from http://www.everyspec.com

APPENDIX B

Item	Protocol Feature	Reference	Status	Support	Notes
403.2.4.4.1.a	If a higher precedence individual frame becomes available for transmission, the concatenated frames shall be re-built to include the higher precedence frame	C.4.4.4.1	403.2.4.4:M	Yes__ No__	
403.2.4.4.1.1	Random Schedule Interval	C.4.4.4.1.1	403.2.4.4:M	Yes__ No__	
403.2.4.4.1.2	Voice Component	C.4.4.4.1.2	403.2.4.4:M	Yes__ No__	
403.2.4.4.1.2.a	The initial voice factor shall be the minimum voice factor value	C.4.4.4.1.2	403.2.4.4:M	Yes__ No__	
403.2.4.4.1.2.1	Fast Attack	C.4.4.4.1.2.1	403.2.4.4:M	Yes__ No__	
403.2.4.4.1.2.1.a	Voice detection shall increment the voice factor by the voice factor increment value (range=0.0 sec to 10.0 sec) as indicated below:	C.4.4.4.1.2.1	403.2.4.4:M	Yes__ No__	
403.2.4.4.1.2.1.a.1	If the voice factor is at the minimum voice factor value, the scheduler is incremented immediately to protect the next voice hit	C.4.4.4.1.2.1.a and C.4.4.4.1.2	403.2.4.4.1.2.1.a:M	Yes__ No__	
403.2.4.4.1.2.1.a.2	Otherwise, the increment occurs at the next scheduler expiration	C.4.4.4.1.2.1.b	403.2.4.4.1.2.1.a:M	Yes__ No__	
403.2.4.4.1.2.2	Slow Decay	C.4.4.4.1.2.2	403.2.4.4:M	Yes__ No__	
403.2.4.4.1.2.2.a	The voice factor shall be decremented every time the NAD expires by the voice decrement value (range=0.0 sec to 10.0 sec)	C.4.4.4.1.2.2	403.2.4.4:M	Yes__ No__	
403.2.4.4.1.3	Calculation of the Scheduler Random Parameter	C.4.4.4.1.3	403.2.4.4:M	Yes__ No__	
403.2.4.4.1.3.a	Continuous calculation of the NumActiveMembers value shall be performed based on the number of known active data transmitters on the net	C.4.4.4.1.3	403.2.4.4:M	Yes__ No__	

Downloaded from http://www.everyspec.com

APPENDIX B

Item	Protocol Feature	Reference	Status	Support	Notes
403.2.4.4.1.3.b	SchedulerInterval shall be recomputed after every transmission by the DTE	C.4.4.4.1.3	403.2.4.4:M	Yes__ No__	
403.2.4.4.1.4	Calculation of the Load Factor (Fload)	C.4.4.4.1.4	403.2.4.4:M	Yes__ No__	
403.2.4.4.1.5	100 msec Immediate Mode Scheduling	C.4.4.4.1.5	403.2.4.4:M	Yes__ No__	
403.2.4.4.1.5.1	Any traffic, voice or data, detected during the immediate mode operation shall abort the 100 msec Immediate Mode and set it to OFF	C.4.4.4.1.5.e	403.2.4.4:M	Yes__ No__	
403.2.4.4.1.6	Immediate Mode Scheduling	C.4.4.4.1.6	403.2.4.4:M	Yes__ No__	
403.2.4.4.2	RE-NAD Network Access	C.4.4.4.2	403.2.4.4:M	Yes__ No__	
403.2.4.4.2.a	When the precedence level of the transmission changes, the DTE shall set the precedence level of the new transmission	C.4.4.4.2	403.2.4.4:M	Yes__ No__	
403.2.4.4.3	Network Busy Sensing and Receive Status	C.4.4.4.3	403.2.4.4:M	Yes__ No__	
403.2.4.5	Deterministic Adaptable Priority-Network Access Delay (DAP-NAD)	C.4.4.5	102.1.3.2:M	Yes__ No__	
403.2.4.5.a	The subscriber that transmits the message shall increment the First Subscriber Number subfield contained in the last message it received and place the number in the First Subscriber Number subfield of the Transmission Header	C.4.4.5	403.2.4.5:M	Yes__ No__	
403.2.4.5.a.1.a	Those subscribers that do not have any urgent messages awaiting transmission shall wait for at least the NS+1 access opportunity before they can transmit	C.4.4.5.a	403.2.4.5:M	Yes__ No__	

Downloaded from http://www.everyspec.com

APPENDIX B

Item	Protocol Feature	Reference	Status	Support	Notes
403.2.4.5.a.1.b	Those subscribers that have only routine messages awaiting transmission shall wait for at least the 2NS+1 access opportunity before transmitting	C.4.4.5.a	403.2.4.5:M	Yes__ No__	
403.2.4.5.a.2.a	Those subscribers that only have routine messages awaiting transmission shall wait for at least NS+2 access opportunity before they can transmit	C.4.4.5.b	403.2.4.5:M	Yes__ No__	
403.2.4.5.a.2.b	The very first network access period following completion of the transmission while in Priority mode shall be reserved for any station with an Urgent message to notify all other subscribers to revert back to Urgent network mode	C.4.4.5.b	403.2.4.5:M	Yes__ No__	
403.2.4.5.a.2.c	After reverting to Urgent mode, the subscriber with the station number matching the First Subscriber Number in the Transmission Header of the transmission completed just before the reserved slot shall have the first network access opportunity	C.4.4.5.b	403.2.4.5:M	Yes__ No__	
403.2.4.5.a.2.d	The network shall then remain in the Urgent mode until all stations have had an opportunity to access the network	C.4.4.5.b	403.2.4.5:M	Yes__ No__	
403.2.4.5.a.3.a	The very first network access period following completion of the transmission shall be reserved for any station with an Urgent or Priority message to cause the network to go to Urgent mode	C.4.4.5.c	403.2.4.5:M	Yes__ No__	
403.2.4.5.1	DAP-NAD Information Field	C.4.4.5.1	403.2.4.5:M	Yes__ No__	

Downloaded from http://www.everyspec.com

APPENDIX B

Item	Protocol Feature	Reference	Status	Support	Notes
403.2.4.5.1.a	Data Link Precedence subfield shall contain the value 0 if an urgent message is in the frame, 1 if a priority but no urgent message is in the frame and 2 if neither an urgent or priority message is in the frame	C.4.4.5.1	403.2.4.5:M	Yes__ No__	
403.2.4.5.1.b	The variable NP in the equations below shall be set equal to the content of the Data Link Precedence subfield for the next network access period	C.4.4.5.1	403.2.4.5:M	Yes__ No__	
403.2.4.5.2	DAP-NAD Equations	C.4.4.5.2	403.2.4.5:M	Yes__ No__	
403.2.4.5.2.a	If a subscriber does not begin transmitting at one term (e.g. NAD_2), it shall wait until at least the next term (e.g. NAD_3) before it can begin transmitting	C.4.4.5.2	403.2.4.5:M	Yes__ No__	
403.2.4.5.2.b	It shall have a value of 0 if there are any urgent messages awaiting transmission, the value 1 if there are any priority messages and no urgent messages awaiting transmission, and the value 2 if there are no urgent or priority messages awaiting transmission	C.4.4.5.2	403.2.4.5:M	Yes__ No__	
403.2.4.5.2.c	NP shall have the value 0 if an urgent message was in the last transmission, 1 if a priority but no urgent message was in the last transmission, and 2 if neither an urgent or priority message was in the last transmission	C.4.4.5.2	403.2.4.5:M	Yes__ No__	
403.2.4.5.3	Initial Condition State	C.4.4.5.3	403.2.4.5:M	Yes__ No__	
403.2.4.5.3.a	These subscribers shall be considered to be in the initial condition state	C.4.4.5.3	403.2.4.5:M	Yes__ No__	

Downloaded from http://www.everyspec.com

APPENDIX B

Item	Protocol Feature	Reference	Status	Support	Notes
403.2.4.5.3.b	Regardless of what causes a subscriber to be in the initial condition state, transmissions shall be delayed by at least the time specified by equation 7 while in that state. Equation 7: INAD = TP + ((3 * NS) + 1) * Net_Busy_Detect_Time + (3 * NS) * DTETURN	C.4.4.5.3	403.2.4.5:M	Yes__ No__	
403.2.4.5.3.c	INAD (Initial condition state Network Access Delay) is the minimum time that a subscriber shall delay transmission of a message after it has become capable of receiving and transmitting messages, but no more than 20 seconds	C.4.4.5.3	403.2.4.5:M	Yes__ No__	
403.2.4.5.3.d	The TP in the equation shall be a worst case TP, i.e., as if there had just been a Type 1 message on the network that required acknowledgement and was addressed to 16 subscribers on the net	C.4.4.5.3	403.2.4.5:M	Yes__ No__	
403.2.5	Voice/Data Network Sharing	C.4.5	M	Yes__ No__	
403.2.5.a	When operating in a mixed voice and data network, voice and data network sharing shall operate in the following matter:	C.4.5	M	Yes__ No__	
403.2.5.a.1	A receive operation shall be considered a voice reception unless a valid synchronization pattern is identified	C.4.5.a	M	Yes__ No__	
403.2.5.a.2	A receive operation that is less than 0.75 seconds in length shall be considered a noise burst instead of a voice reception	C.4.5.a and 6.3.2.2.2	M	Yes__ No__	

Downloaded from http://www.everyspec.com

APPENDIX B

Item	Protocol Feature	Reference	Status	Support	Notes
403.2.5.a.3	The network shall be synchronized based on RHD and TP timers, which are driven only by data transmissions and receptions	C.4.5.b	M	Yes__ No__	
403.2.5.a.4	Voice receptions and noise bursts shall not be used for resynchronizing network timers	C.4.5.b	M	Yes__ No__	
403.2.5.a.5	A station shall not transmit during a noise burst or a voice reception	C.4.5.c	M	Yes__ No__	
403.2.5.a.6	After completion of a voice reception, a station shall wait at least TURN milliseconds before initiating transmission	C.4.5.c	M	Yes__ No__	
403.2.5.a.7	After completion of a voice reception, operation of the P-NAD network access scheme shall be reinitiated if P-NAD is being used	C.4.5.d	M	Yes__ No__	
403.2.5.a.8	After a voice reception is completed, the current, partially-completed NAD slot group and the next complete NAD slot group shall be used only by stations with urgent-precedence data transmissions	C.4.5.d	M	Yes__ No__	
403.2.5.a.9	The NAD slot group after these groups shall be used only by stations with urgent-precedence or priority-precedence data transmissions	C.4.5.d	M	Yes__ No__	
403.2.5.a.10	RHD and TP timers shall not be suspended or resumed as a result of voice receptions	C.4.5.e	M	Yes__ No__	
403.2.5.a.11	Data link protocol timers shall be suspended and resumed as a result of voice receptions	C.4.5.f	M	Yes__ No__	
403.2.5.a.12	The Intranet layer timers shall not be suspended and resumed as a result of voice receptions	C.4.5.g	M	Yes__ No__	

Downloaded from http://www.everyspec.com

Item	Protocol Feature	Reference	Status	Support	Notes
403.2.5.a.13	Relative priorities of voice and data on the network shall be adjusted by selectively enabling or disabling physical and/or data link concatenation for a station	C.4.5.h	M	Yes__ No__	

A.7.3 Communications Security Standards

Item	Protocol Feature	Reference	Status	Support	Notes
404	Communications Security Standards	Appendix D	O	Yes__ No__	
404.1	Interoperability	D.1.3	404:M	Yes__ No__	
404.1.a	The systems integrators and systems planners shall ensure that compatible media and signaling are chosen if interoperability is desired	D.1.3	404:M	Yes__ No__	
404.2	General Requirements	D.4	404:M	Yes__ No__	
404.2.a	The forward-compatible mode shall apply for all DTE subsystems with embedded COMSEC	D.4	404:M	Yes__ No__	
404.3	Detailed Requirements	D.5	404:M	Yes__ No__	
404.3.1	Traditional COMSEC Transmission Frame	D.5.1	404:O	Yes__ No__	
404.3.1.a	The traditional COMSEC transmission frame shall be composed of the following components:	D.5.1	404.3.1:M	Yes__ No__	
404.3.1.a.1	COMSEC Bit Synchronization	D.5.1.a	404.3.1.a:M	Yes__ No__	
404.3.1.a.2	COMSEC Frame Synchronization	D.5.1.b	404.3.1.a:M	Yes__ No__	
404.3.1.a.3	Message Indicator	D.5.1.c	404.3.1.a:M	Yes__ No__	
404.3.1.a.4	Phasing	D.5.1.d	404.3.1.a:M	Yes__ No__	
404.3.1.a.5	Transmission Synchronization	D.5.1.e	404.3.1.a:M	Yes__ No__	

Downloaded from http://www.everyspec.com

APPENDIX B

Item	Protocol Feature	Reference	Status	Support	Notes
404.3.1.a.6	Data Field (incl. Transmission Header)	D.5.1.f	404.3.1.a:M	Yes__ No__	
404.3.1.a.7	COMSEC Postamble	D.5.1.g	404.3.1.a:M	Yes__ No__	
404.3.1.1	COMSEC Preamble Field	D.5.1.1	404.3.1:M	Yes__ No__	
404.3.1.1.a	The COMSEC preamble field shall consist of three components: a COMSEC bit synchronization subfield, a COMSEC frame synchronization subfield, and a Message Indicator (MI) subfield	D.5.1.1	404.3.1:M	Yes__ No__	
404.3.1.1.1	COMSEC Bit Synchronization Subfield	D.5.1.1.1	404.3.1:M	Yes__ No__	
404.3.1.1.1.a	This subfield shall be used to provide a signal for achieving bit synchronization and for indicating activity on a data link to the receiver	D.5.1.1.1	404.3.1:M	Yes__ No__	
404.3.1.1.1.b	The duration of the COMSEC bit synchronization subfield shall be selectable from 65 milliseconds to 1.5 seconds	D.5.1.1.1	404.3.1:M	Yes__ No__	
404.3.1.1.1.c	The COMSEC bit synchronization subfield shall consists of the data-rate clock signal for the duration of the subfield	D.5.1.1.1	404.3.1:M	Yes__ No__	
404.3.1.1.2	COMSEC Frame Synchronization Subfield	D.5.1.1.2	404.3.1:M	Yes__ No__	
404.3.1.1.2.a	This subfield shall be used to provide a framing signal indicating the start of the encoded MI to the receiving station	D.5.1.1.2	404.3.1:M	Yes__ No__	
404.3.1.1.2.b	This subfield shall be 465 bits long, consisting of 31 Phi-encoded bits	D.5.1.1.2	404.3.1:M	Yes__ No__	

Downloaded from http://www.everyspec.com

APPENDIX B

Item	Protocol Feature	Reference	Status	Support	Notes
404.3.1.1.2.c	A logical 1 data bit shall be encoded as Phi(1) = 000100110101111 (MSB on the left), and logical 0 data bit shall be encoded as Phi(0) = 111011001010000 (MSB on the left)	D.5.1.1.2	404.3.1:M	Yes__ No__	
404.3.1.1.3	Message Indicator Subfield	D.5.1.1.3	404.3.1:M	Yes__ No__	
404.3.1.1.3.a	This subfield shall contain the COMSEC-provided MI, a stream of random bits that are redundantly encoded using Phi patterns	D.5.1.1.3	404.3.1:M	Yes__ No__	
404.3.1.2	Phasing	D.5.1.2 and C.3.2.2	404.3.1:M	Yes__ No__	
404.3.1.2.a	This field shall be a string of alternating ones and zeros, beginning with a one, sent by the DTE	D.5.1.2	404.3.1:M	Yes__ No__	
404.3.1.3	Transmission Synchronization Field	D.5.1.3	404.3.1:M	Yes__ No__	
404.3.1.3.a	This field, consisting of the frame synchronization subfield, optional robust frame format subfield, and the TWC subfield, shall be as defined in 5.2.1.3	D.5.1.3	404.3.1:M	Yes__ No__	
404.3.1.4	Data Field	D.5.1.4	404.3.1:M	Yes__ No__	
404.3.1.4.a	This field, including Transmission Header, shall be as defined in 5.2.1.4	D.5.1.4 and 5.2.1.4	404.3.1:M	Yes__ No__	
404.3.1.5	COMSEC Postamble Field	D.5.1.5	404.3.1:M	Yes__ No__	
404.3.1.5.a	This field shall be used to provide an end-of-transmission flag to the COMSEC at the receiving station	D.5.1.5	404.3.1:M	Yes__ No__	
404.3.1.6	COMSEC Algorithm	D.5.1.6	404.3.1:M	Yes__ No__	
404.3.1.6.a	The COMSEC algorithm shall be backward-compatible with VINSON equipment	D.5.1.6	404.3.1:M	Yes__ No__	

Downloaded from http://www.everyspec.com

APPENDIX B

Item	Protocol Feature	Reference	Status	Support	Notes
404.3.1.7	COMSEC Modes of Operation	D.5.1.7	404.3.1:M	Yes__ No__	
404.3.1.7.a	The COMSEC shall be operated in Mode A	D.5.1.7	404.3.1:M	Yes__ No__	
404.3.1.7.b	The rekey functions shall be performed through the use of KY-57 rekeys for backward compatibility	D.5.1.7	404.3.1:M	Yes__ No__	
404.3.2	Embedded COMSEC Transmission Frame	D.5.2	404:O	Yes__ No__	
404.3.2.a	The embedded COMSEC transmission frame shall be composed of the following components:	D.5.2	404.3.2:M	Yes__ No__	
404.3.2.a.1	Phasing	D.5.2.a	404.3.2.a:M	Yes__ No__	
404.3.2.a.2	Frame Synchronization	D.5.2.b	404.3.2.a:M	Yes__ No__	
404.3.2.a.3	Optional Robust Frame Format	D.5.2.c	404.3.2.a:M	Yes__ No__	
404.3.2.a.4	Message Indicator	D.5.2.d	404.3.2.a:M	Yes__ No__	
404.3.2.a.5	Transmission Word Count	D.5.2.e	404.3.2.a:M	Yes__ No__	
404.3.2.a.6	Data Field	D.5.2.f	404.3.2.a:M	Yes__ No__	
404.3.2.a.7	COMSEC Postamble	D.5.2.g	404.3.2.a:M	Yes__ No__	
404.3.2.1	Phasing	D.5.2.1 and C.3.2.2	404.3.2:M	Yes__ No__	
404.3.2.1.a	This field shall be a string of alternating ones and zeros, beginning with a one, sent by the DTE	D.5.2.1	404.3.2:M	Yes__ No__	
404.3.2.2	Frame Synchronization Subfield	D.5.2.2	404.3.2:M	Yes__ No__	
404.3.2.2.a	This subfield shall be either the Robust Frame Synchronization subfield or the Frame Synchronization subfield	D.5.2.2, 5.2.1.3.1.2 and 5.2.1.3.1.1	404.3.2:M	Yes__ No__	
404.3.2.3	Robust Frame Format Subfield	D.5.2.3	404.3.2:M	Yes__ No__	

Downloaded from http://www.everyspec.com

APPENDIX B

Item	Protocol Feature	Reference	Status	Support	Notes
404.3.2.3.a	When the Robust Frame Synchronization subfield is used, the Robust Frame Format subfield also shall be used	D.5.2.3 and 5.2.1.3.1.2	404.3.2:M	Yes__ No__	
404.3.2.3.b	The Robust Frame Format subfield shall not be used when the Robust Frame Synchronization subfield is not used	D.5.2.3	404.3.2:M	Yes__ No__	
404.3.2.4	Message Indicator Field	D.5.2.4	404.3.2:M	Yes__ No__	
404.3.2.4.a	This field shall contain the MI, a stream of random data that shall be encoded using Golay	D.5.2.4, 5.3.14.1 and 5.3.14.2	404.3.2:M	Yes__ No__	
404.3.2.4.b	The COMSEC shall provide the MI bits	D.5.2.4	404.3.2:M	Yes__ No__	
404.3.2.4.c	For backward compatibility, these MI bits shall be redundantly encoded using Phi patterns	D.5.2.4	404.3.2:M	Yes__ No__	
404.3.2.5	Transmission Word Count Subfield	D.5.2.5	404.3.2:M	Yes__ No__	
404.3.2.5.a	This subfield shall be as defined in 5.2.1.3.1.4	D.5.2.5 and 5.2.1.3.1.4	404.3.2:M	Yes__ No__	
404.3.2.6	Data Field	D.5.2.6	404.3.2:M	Yes__ No__	
404.3.2.6.a	This field, including Transmission Header, shall be as defined in 5.2.1.4	D.5.2.6 and 5.2.1.4	404.3.2:M	Yes__ No__	
404.3.2.7	COMSEC Postamble Field	D.5.2.7	404.3.2:M	Yes__ No__	
404.3.2.7.a	This field shall be used to provide an end-of-transmission flag to the COMSEC at the receiving station	D.5.2.7	404.3.2:M	Yes__ No__	
404.3.2.7.b	The flag shall be cryptographic function and may be used by the data terminal as an end-of-message flag as well	D.5.2.7	404.3.2:M	Yes__ No__	
404.3.2.8	COMSEC Algorithm	D.5.2.8	404.3.2:M	Yes__ No__	
404.3.2.9	COMSEC Modes of Operation	D.5.2.9	404.3.2:M	Yes__ No__	
404.3.2.9.a	COMSEC shall be operated in Mode A for all applications	D.5.2.9	404.3.2:M	Yes__ No__	

Downloaded from http://www.everyspec.com

Item	Protocol Feature	Reference	Status	Support	Notes
404.3.2.9.b	The rekey functions shall be performed through the use of KY-57 rekeys for backward-compatibility and shall be performed through over-the-air-rekeying (OTAR) techniques for forward compatibility	D.5.2.9	404.3.2:M	Yes__ No__	
404.3.2.9.c	Rekey signaling for OTAR shall be supplied by the host equipment	D.5.2.9	404.3.2:M	Yes__ No__	

A.7.4 CNR Management Processes

Item	Protocol Feature	Reference	Status	Support	Notes
405	CNR Management Processes	Appendix E	O	Yes__ No__	
405.1	Network Configuration	E.3	405:M	Yes__ No__	
405.2	Exchange Network Parameters (XNP) Message	E.4	405:M	Yes__ No__	
405.2.1	XNP Message Structure	E.4.1	405.2:M	Yes__ No__	
405.2.1.a	Undefined bits shall be set to zero on transmission and ignored on receipt	E.4.1	405.2:M	Yes__ No__	
405.2.1.b	The processing of XNP messages containing undefined/invalid values shall be:	E.4.1	405.2:M	Yes__ No__	
405.2.1.b.1	Ignore any undefined bits in a bit map	E.4.1.a	405.2.1.b:M	Yes__ No__	
405.2.1.b.2	If the Version Number is invalid or unsupported, discard the XNP message	E.4.1.b	405.2.1.b:M	Yes__ No__	
405.2.1.b.3	If any field in the Forwarding Header is invalid, discard the XNP message	E.4.1.c	405.2.1.b:M	Yes__ No__	
405.2.1.b.4	If the Message Number field is invalid, discard the XNP message	E.4.1.d	405.2.1.b:M	Yes__ No__	

Downloaded from http://www.everyspec.com

APPENDIX B

Item	Protocol Feature	Reference	Status	Support	Notes
405.2.1.b.5	If the Length field is invalid in any Message Block (i.e., the value indicates that there are more octets than actually exist in the XNP message), discard the rest of the XNP message and continue processing the XNP message.	E.4.1.e	405.2.1.b:M	Yes__ No__	
405.2.1.b.6	If the Block Number field is invalid in any XNP message, discard the block and continue processing the XNP message	E.4.1.f	405.2.1.b:M	Yes__ No__	
405.2.1.b.7	If the Length field is invalid in any Data Block (i.e., the value indicates that there are more octets than actually exist in the XNP message), discard the rest of the XNP message but act on the preceding blocks if possible	E.4.1.g	405.2.1.b:M	Yes__ No__	
405.2.1.b.8	If any other field is invalid in any Data Block, discard the data block and continue processing the XNP message	E.4.1.h	405.2.1.b:M	Yes__ No__	
405.2.1.b.9	If any other field is invalid in an XNP message, discard the XNP message	E.4.1.i	405.2.1.b:M	Yes__ No__	
405.2.1.1	Forwarding Header	E.4.1.1	405.2:M	Yes__ No__	
405.2.1.1.a	An “Unknown” Forwarder Link Address shall be represented by a value of 0 (zero)	E.4.1.1	405.2:M	Yes__ No__	
405.2.1.2	Message and Data Block Structure	E.4.1.2	405.2:M	Yes__ No__	
405.2.1.2.a	Any blocks or messages appearing after the Terminator Block shall be ignored	E.4.1.2	405.2:M	Yes__ No__	
405.2.2	XNP Message Formats	E.4.2	405.2:M	Yes__ No__	
405.2.2.1	Join Request	E.4.2.1	O	Yes__ No__	

Downloaded from http://www.everyspec.com

APPENDIX B

Item	Protocol Feature	Reference	Status	Support	Notes
405.2.2.1.a	If there is no URN a unique identifier shall be assigned to each potential user by a mechanism outside the scope of this appendix	E.4.2.1	405.2.2.1:M	Yes__ No__	
405.2.2.2	Join Accept	E.4.2.2	O	Yes__ No__	
405.2.2.3	Join Reject	E.4.2.3	O	Yes__ No__	
405.2.2.3.a	When a station receives a Join Reject message, the station identified in the Station Identifier field shall be removed from its topology tables unless it is a static node (link quality is 7)	E.4.2.3	405.2.2.3:M	Yes__ No__	
405.2.2.4	Hello Message	E.4.2.4	405.2:M	Yes__ No__	
405.2.2.4.a	When a station receives a Hello message, it shall update its topology tables	E.4.2.4	405.2:M	Yes__ No__	
405.2.2.5	Goodbye Message	E.4.2.5	405.2:M	Yes__ No__	
405.2.2.5.a	When a station receives a Goodbye message, it shall update its topology tables	E.4.2.5	405.2:M	Yes__ No__	
405.2.2.6	Parameter Update Request Message	E.4.2.6	O	Yes__ No__	
405.2.2.7	Parameter Update Message	E.4.2.7	O	Yes__ No__	
405.2.2.7.a	The Parameter Update message shall be sent in response to the Parameter Update Request message	E.4.2.7	405.2.2.7:M	Yes__ No__	
405.2.2.8	Delay Time Message	E.4.2.8	O	Yes__ No__	
405.2.2.9	Status Notification Message	E.4.2.9	O	Yes__ No__	
405.2.2.9.a	A receiving station that is using a different set of parameter values (different parameter update identifier) shall notify the network controller and request the latest update	E.4.2.9	405.2.2.9:M	Yes__ No__	
405.2.2.9.b	Update shall be accomplished using the Parameter Update message	E.4.2.9	405.2.2.9:M	Yes__ No__	

Downloaded from http://www.everyspec.com

APPENDIX B

Item	Protocol Feature	Reference	Status	Support	Notes
405.2.2.9.c	The parameter update message shall utilize reliable link layer transmission services Type 1 ACK	E.4.2.9	405.2.2.9:M	Yes__ No__	
405.2.3	XNP Data Block Formats	E.4.3	405.2:M	Yes__ No__	
405.2.3.1	Block 1, Station Identification	E.4.3.1	405.2.2.7:M	Yes__ No__	
405.2.3.1.a	Block 1 consists of one field which is used to identify the station being reported. It is used with the Parameter Update message to identify the station to which the parameters apply, in Block 2, and/or Block 11 (that shall be preceded by Block 1).	E.4.3.1	405.2.2.7:M	Yes__ No__	
405.2.3.2	Block 2, Basic Network Parameters	E.4.3.2	405.2.2.1:M 405.2.2.2:O 405.2.2.4:O 405.2.2.6:O 405.2.2.7:O	Yes__ No__ Yes__ No__ Yes__ No__ Yes__ No__ Yes__ No__	
405.2.3.3	Block 3, MAC Parameters	E.4.3.3	403.2.1.3:M 403.2.2:M 403.2.3:M	Yes__ No__ Yes__ No__ Yes__ No__	
405.2.3.4	Block 4, Type 3 Parameters	E.4.3.4	203.3:M 405.2.2.2:M 405.2.2.6:O 405.2.2.7:O	Yes__ No__ Yes__ No__ Yes__ No__ Yes__ No__	
405.2.3.5	Block 5, Deterministic NAD Parameters	E.4.3.5	202.4.3:M 202.4.5:M	Yes__ No__ Yes__ No__	
405.2.3.6	Block 6, Probabilistic NAD Parameters	E.4.3.6	202.4.1:M 202.4.2:M	Yes__ No__ Yes__ No__	
405.2.3.7	Block 7, RE-NAD Parameters	E.4.3.7	202.4.4:M	Yes__ No__	
405.2.3.8	Block 8, Wait Time	E.4.3.8	O	Yes__ No__	
405.2.3.9	Block 9, Type 2 Parameters	E.4.3.9	203.2:M	Yes__ No__	
405.2.3.10	Block 10, Type 4 Parameters	E.4.3.10	203.4:M	Yes__ No__	
405.2.3.11	Block 11, NAD Ranking	E.4.3.11	202.4.3:M 202.4.5:M	Yes__ No__ Yes__ No__	
405.2.3.12	Block 12, Intranet Parameters	E.4.3.12	O	Yes__ No__	

Downloaded from http://www.everyspec.com

APPENDIX B

Item	Protocol Feature	Reference	Status	Support	Notes
405.2.3.12.a	The Intranet parameters shall be provided to joining stations to provide information for Intranet relaying within the local network	E.4.3.12	405.2.3.12:M	Yes__ No__	
405.2.3.12.b	This block shall be included with the Join Accept and Parameter Update messages	E.4.3.12	405.2.3.12:M	Yes__ No__	
405.2.3.13	Block 13, Error	E.4.3.13	O	Yes__ No__	
405.2.3.14	Block 14, Address Designation Parameters	E.4.3.14	O	Yes__ No__	
405.3	XNP Message Exchange	E.5	405.2:M	Yes__ No__	
405.3.a	XNP messages shall be exchanged using a UI command frame	E.5	405.2:M	Yes__ No__	
405.3.1	Data Link Addressing	E.5.1	405.2:M	Yes__ No__	
405.3.1.a	If a station has not been assigned a data link address, it shall use this special data link address for network entry until an individual data link address has been assigned or selected	E.5.1	405.2:M	Yes__ No__	
405.3.1.b	The forwarder shall provide the full source directed relay path to the network controller at the Intranet layer	E.5.1	405.2:M	Yes__ No__	
405.3.1.c	The network controller shall use this same path in reverse to reach the joining station through the forwarder	E.5.1	405.2:M	Yes__ No__	
405.3.2	Poll/Final Bit	E.5.2	405.2:M	Yes__ No__	
405.3.3	Network Access	E.5.3	405.2:M	Yes__ No__	
405.3.3.a	MIL-STD-188-220 allows a network to choose among the network access delay methods defined in Appendix C. Each station that operates on the network shall use the same method.	E.5.3 and Appendix C	405.2:M	Yes__ No__	

Downloaded from http://www.everyspec.com

APPENDIX B

Item	Protocol Feature	Reference	Status	Support	Notes
405.3.3.b	In the case that the network access method is unknown, a random method (R-NAD or RE-NAD) shall be used for the Join Request message	E.5.3	202.4.1:M 202.4.4:M	Yes__ No__ Yes__ No__	
405.3.3.c	When R-NAD is used, the default number of stations shall be 7 unless another number is known	E.5.3	202.4.1:M	Yes__ No__	
405.4	Network Joining Procedures	E.6	405.2:M	Yes__ No__	
405.4.1	Joining Concept	E.6.1	405.2:M	Yes__ No__	
405.4.1.a	When the joining station receives a Join Accept message response from the network controller, it shall select a data link address from the address bit map and broadcast a Hello message announcing entry to the network	E.6.1	405.2:M	Yes__ No__	
405.4.1.b	Other members of the network shall update their topology tables upon receipt of the Hello message	E.6.1	405.2.2.4:M	Yes__ No__	
405.4.1.c	Other members of the network shall update their topology tables upon receipt of the Join Reject message	E.6.1	405.2.2.3:M	Yes__ No__	
405.4.1.d	When a station leaves a network, it shall send a Goodbye message to announce that the data link address is available for use by another station	E.6.1	405.2:M	Yes__ No__	
405.4.1.e	Other members of the network shall update their topology tables upon receipt of the Goodbye message	E.6.1	405.2.2.5:M	Yes__ No__	
405.4.2	Procedures for Joining a Network with Centralized Network Control	E.6.2	405.2:M	Yes__ No__	
405.4.2.a	The joining station shall send a Join Request message to the network controller	E.6.2	405.2:M	Yes__ No__	

Downloaded from http://www.everyspec.com

APPENDIX B

Item	Protocol Feature	Reference	Status	Support	Notes
405.4.2.b	The Join Request message shall be addressed to the network controller using the special data link address of 2 as the destination and the special data link address of 1 as the source in the UI frame	E.6.2	405.2:M	Yes__ No__	
405.4.2.c	If the joining station is unable to contact the network controller because of distance or topology, there will be no response to the Join Request message. In this event, the joining station shall retransmit the Join Request message after the Join Request interval timer expires until the Maximum Number of Join Retries has been exceeded or until either a Join Reject or Join Accept message is received	E.6.2	405.2:M	Yes__ No__	
405.4.2.d	If the maximum number of Join Retries is exceeded, the joining station shall then address a UI frame containing the Join Request message to the Global address	E.6.2	405.2:M	Yes__ No__	
405.4.2.e	The joining station shall continue sending the Join Request message to the Global address after the Join Request interval expires until a response is received from an existing network member	E.6.2	405.2.2.1:M	Yes__ No__	
405.4.2.f	All network members that receive the globally addressed Join Request message, and intend to participate in the joining procedure, shall send a Delay Time message with an XNP Forwarding Header in response to the joining station	E.6.2	405.2.2.1:M	Yes__ No__	

Downloaded from http://www.everyspec.com

APPENDIX B

Item	Protocol Feature	Reference	Status	Support	Notes
405.4.2.g	The joining station shall select one of the responding stations as forwarder and resend the Join Request to the network controller using the forwarding parameters in the Forwarding Header received from the selected station	E.6.2	405.2:M	Yes__ No__	
405.4.2.h	The selected forwarder shall relay this Join Request to the network controller and forward the network controller's response (Join Accept or Join Reject message) back to the joining station	E.6.2	405.2:M	Yes__ No__	
405.4.2.i	The Join Accept message shall specify a list of unused data link addresses	E.6.2	405.2:M	Yes__ No__	
405.4.2.j	The joining station shall expect the network controller response before expiration of the Delay Timer (the period of time specified in the selected forwarder's Delay Time message)	E.6.2	405.2:M	Yes__ No__	
405.4.2.k	If the Delay Timer expires, the joining station shall try each responder in turn in an attempt to contact the network controller	E.6.2	405.2:M	Yes__ No__	
405.4.2.m	When the joining station receives a Join Accept message response from the network controller, it shall prepare a Hello message announcing entry to the network	E.6.2	405.2:M	Yes__ No__	
405.4.2.n	The Hello message shall use the joining station's assigned individual address (selected from the Join Accept's list of unused data link addresses) as the source address and shall include both the forwarder's individual address and the Global multicast address as destinations in the UI frame	E.6.2	405.2.2.4:M	Yes__ No__	

Downloaded from http://www.everyspec.com

Item	Protocol Feature	Reference	Status	Support	Notes
405.4.2.o	The UI frame carrying this Hello message shall have the P-bit set	E.6.2	405.2.2.4:M	Yes__ No__	
405.4.2.p	The forwarder shall return a Type 1 acknowledgement to the joining station and then complete the broadcast of the Hello message to all network members	E.6.2	405.2.2.4:M	Yes__ No__	
405.4.2.q	The forwarder shall set the maximum hop count in the Intranet Header of the message to restrict the amount of relaying	E.6.2	405.2:M	Yes__ No__	
405.4.3	BLANK	E.6.4	X	---	
405.4.4	Joining Procedure Examples	E.6.4	405.2:M	Yes__ No__	
405.4.4.1	Centralized Network Control, Fully Connected Network	E.6.4.1	405.2:M	Yes__ No__	
405.4.4.1.1	Sequence of Events	E.6.4.1.1	405.2:M	Yes__ No__	
405.4.4.1.2	Message Formats	E.6.4.1.2	405.2:M	Yes__ No__	
405.4.4.2	Centralized Network Control, Disconnected Joiner	E.6.4.2	405.2:M	Yes__ No__	
405.4.4.2.1	Sequence of Events	E.6.4.2.1	405.2:M	Yes__ No__	
405.4.4.2.2	Message Formats	E.6.4.2.2	405.2:M	Yes__ No__	
405.4.4.3	BLANK	E.6.4.3	X	---	

A.7.5 Golay Coding Algorithm

Item	Protocol Feature	Reference	Status	Support	Notes
406	Golay Coding Algorithm	Appendix F	102.1.3.1:M 102.1.3.2:M 102.1.3.3:X	Yes__ No__ Yes__ No__ No	
406.1	Forward Error Correction	F.3	406:M	Yes__ No__	
406.2	Golay Code	F.4	406:M	Yes__ No__	
406.2.1	Half-rate Golay Code	F.4.1	406.2:M	Yes__ No__	
406.2.2	Golay Code Implementation	F.4.2	406.2:M	Yes__ No__	

Downloaded from http://www.everyspec.com

Item	Protocol Feature	Reference	Status	Support	Notes
406.2.2.1	Hardware Implementation	F.4.2.1	406.2:O.<2>	Yes__ No__	
406.2.2.2	Hardware Decoding	F.4.2.2	406.2.2.1:M	Yes__ No__	
406.2.2.3	Software Implementation	F.4.2.3	406.2:O.<2>	Yes__ No__	
406.2.2.3.a	The transmitting DMTD shall generate the check bits using the following generator polynomial: $g(x)=x^{11} + x^{10} + x^6 + x^5 + x^4 + x^2 + 1$	F.4.2.3	406.2.2.3:M	Yes__ No__	
406.2.2.3.b	The 11 check bits shall be as derived from the generator matrix G, where the matrix contains the coefficients of the polynomials on the left	F.4.2.3	406.2.2.3:M	Yes__ No__	

A.7.6 Packet Construction and Bit Ordering

Item	Protocol Feature	Reference	Status	Support	Notes
407	Packet Construction and Bit Ordering	Appendix G	M	Yes__ No__	
407.1	PDU Construction	G.3	M	Yes__ No__	
407.1.1	VMF Message Data Exchange	G.3.1	M	Yes__ No__	
407.1.1.1	Example of VMF Message Data Construction	G.3.1.1	X	---	
407.1.2	Application Layer Data Exchange	G.3.2	M	Yes__ No__	
407.1.2.1	Example of Application Layer PDU	G.3.2.1	X	---	
407.1.3	Transport Layer Data Exchange	G.3.3	M	Yes__ No__	
407.1.3.1	An Example of UDP Header Construction	G.3.3.1	X	---	
407.1.4	Network Layer Data Exchange	G.3.4	M	Yes__ No__	
407.1.4.1	Example of Internet Layer Header	G.3.4.1	102.1.3.1:M 102.1.3.2:M 102.1.3.3:X	Yes__ No__ Yes__ No__ No	
407.1.4.2	Example of Intranet Layer Header	G.3.4.2	102.1.3.1:M 102.1.3.2:M 102.1.3.3:X	Yes__ No__ Yes__ No__ No	

Downloaded from http://www.everyspec.com

Item	Protocol Feature	Reference	Status	Support	Notes
407.1.5	BLANK	G.3.5	X	---	
407.1.6	Data Link Layer Data Exchange	G.3.6	M	Yes__ No__	
407.1.6.1	Example of Data Link Layer PDU	G.3.6.1	102.1.3.1:M 102.1.3.2:M 102.1.3.3:X	Yes__ No__ Yes__ No__ No	
407.1.6.1.1	Zero Bit Insert/v36 Scramble/FEC/TDC of the Data Link Frame	G.3.6.1.1	M	Yes__ No__	
407.1.6.1.2	Construction of the Transmission Header	G.3.6.1.2	M	Yes__ No__	
407.1.6.1.3	Zero Bit Insert/v36 Scramble/FEC of the Transmission Header	G.3.6.1.3	M	Yes__ No__	
407.1.6.1.4	Completed Data Link Layer PDU to be Passed to the Physical Layer	G.3.6.1.4	M	Yes__ No__	
407.1.7	Physical Layer Data Exchange	G.3.7	M	Yes__ No__	
407.1.7.1	Physical Layer Processing Example	G.3.7.1	102.1.3.1:M 102.1.3.2:M 102.1.3.3:X	Yes__ No__ Yes__ No__ No	
407.1.7.1.1	Transmit Word Count (TWC)	G.3.7.1.1	M	Yes__ No__	
407.1.7.1.2	FEC & TDC of Transmission Header	G.3.7.1.2	M	Yes__ No__	
407.1.7.1.3	The Physical Layer PDU	G.3.7.1.3	M	Yes__ No__	

A.7.7 Intranet Topology Update

Item	Protocol Feature	Reference	Status	Support	Notes
408	Intranet Topology Update	Appendix H	301.2:M	Yes__ No__	
408.1	Problem Overview	H.3	301.2:M	Yes__ No__	
408.1.1	Routing Trees	H.3.1	301.2:M	Yes__ No__	
408.2	Topology Updates	H.4	301.2:M	Yes__ No__	
408.2.1	Exchanging Routing Trees	H.4.1	301.2:M	Yes__ No__	
408.2.2	Topology Tables	H.4.2	301.2:M	Yes__ No__	

Downloaded from http://www.everyspec.com

Item	Protocol Feature	Reference	Status	Support	Notes
408.2.3	Sparse Routing Trees	H.4.3	301.2:M	Yes__ No__	
408.2.4	Rules for Exchanging Topology Updates	H.4.4	301.2:M	Yes__ No__	
408.2.4.1	Topology Update Triggers	H.4.4.1	301.2:M	Yes__ No__	
408.2.4.2	Sending Topology Update Messages	H.4.4.2	301.2:M	Yes__ No__	
408.2.5	Non-relayers	H.4.5	301.2:M	Yes__ No__	
408.2.5.a	Non-relayer nodes remain in the sparse routing trees; however, they shall not have any subsequent branches	H.4.5	301.2:M	Yes__ No__	
408.2.5.b	Their entries in the routing table shall have the NR bit set to 1	H.4.5	301.2:M	Yes__ No__	
408.2.6	Quiet Nodes	H.4.6	301.2:M	Yes__ No__	
408.2.6.a	Nodes in the quiet state may appear in the sparse routing tables and in update packets with the QUIET bit set to 1; however, they shall not have any subsequent branches in the routing tree	H.4.6	301.2:M	Yes__ No__	
408.2.6.b	Nodes wishing to announce that they are entering quiet mode shall add a separate entry into the sparse routing table and update packets with NODE ADDRESS and NODE PREDECESSOR set to their own address and the QUIET bit set to 1	H.4.6	301.2:M	Yes__ No__	
408.2.7	Topology Update Request Messages	H.4.7	301.2:M	Yes__ No__	

A.7.8 Source Directed Relay

Item	Protocol Feature	Reference	Status	Support	Notes
409	Source Directed Relay	Appendix I	301.1.a:M	Yes__ No__	
409.1	Problem Overview	I.3	409:M	Yes__ No__	
409.2	Procedure	I.4	409:M	Yes__ No__	

Downloaded from http://www.everyspec.com

Item	Protocol Feature	Reference	Status	Support	Notes
409.2.1	Forward Routing	I.4.1	409:M	Yes__ No__	
409.2.1.a	The source shall calculate the path through the intranet network to reach each destination	I.4.1	409:M	Yes__ No__	
409.2.1.b	The specific source directed route for each destination shall be encoded into the intranet header	I.4.1	409:M	Yes__ No__	
409.2.2	End-to-end Acknowledgements	I.4.2	409:M	Yes__ No__	
409.3	Examples	I.5	X	---	
409.3.1	Example 1	I.5.1	X	---	
409.3.2	Example 2	I.5.2	X	---	
409.3.3	Example 3	I.5.3	X	---	
409.3.4	Relay Processing	I.5.4	X	---	
409.3.4.1	Relay Processing at Node C	I.5.4.1	X	---	
409.3.4.2	Relay Processing at Node F	I.5.4.2	X	---	

A.7.9 Robust Communications Protocol

Item	Protocol Feature	Reference	Status	Support	Notes
410	Robust Communications Protocol	Appendix J	102.1.3.4:M	Yes__ No__	
410.1	Introduction	J.3	102.1.3.4:M	Yes__ No__	
410.1.1	Physical Protocol Components	J.3.1	102.1.3.4:M	Yes__ No__	
410.1.2	Optional Rate 1/3 Convolutional Coding	J.3.2	102.1.3.4:M	Yes__ No__	
410.1.2.a	The G2 output shall be inverted to provide some data scrambling capability	J.3.2	102.1.3.4:M	Yes__ No__	
410.1.3	Optional Data Scrambling	J.3.3	102.1.3.4:M	Yes__ No__	
410.1.3.a	Physical layer data scrambling shall use the pseudo random bit generator specified in CCITT V.33 Annex A	J.3.3	102.1.3.4:M	Yes__ No__	

Downloaded from http://www.everyspec.com

APPENDIX B

Item	Protocol Feature	Reference	Status	Support	Notes
410.1.3.b	The shift register shall be initialized to all zeros before the first bit of data is scrambled on transmission	J.3.3	102.1.3.4:M	Yes__ No__	
410.1.3.c	On data reception, the descrambler shift register shall be initialized to zero before the first received data bit is descrambled	J.3.3	102.1.3.4:M	Yes__ No__	
410.1.4	Optional Robust Multi-Dwell	J.3.4	102.1.3.4:M	Yes__ No__	
410.1.4.1	Multi-Dwell Packet Format	J.3.4.1	102.1.3.4:M	Yes__ No__	
410.1.4.1.a	When the HAVEQUICK II compatible radio is in active mode, multi-dwell packetizing shall be enabled	J.3.4.1	102.1.3.4:M	Yes__ No__	
410.1.4.2	Multi-Dwell SOP Field	J.3.4.2	102.1.3.4:M	Yes__ No__	
410.1.4.2.a	The length of the SOP pattern shall be determined by bits two, three and four of the robust frame format	J.3.4.2	102.1.3.4:M	Yes__ No__	
410.1.4.3	Multi-Dwell Segment Count Field	J.3.4.3	102.1.3.4:M	Yes__ No__	
410.1.4.3.a	The six required bits shall be encoded as 1, 3, or 5 BCH (15, 7) codewords depending on bits 2, 3, and 4 of the robust frame format	J.3.4.3	102.1.3.4:M	Yes__ No__	
410.1.4.3.b	The six-bit segment counter shall occupy the 6 LSBs of the seven-bit BCH data field	J.3.4.3	102.1.3.4:M	Yes__ No__	
410.1.4.3.c	The MSB of the data field shall be used as an end-of-frame flag which, when set, indicates that data transmission is complete	J.3.4.3	102.1.3.4:M	Yes__ No__	
410.1.4.3.d	A multi-dwell packet marked with an end-of-frame flag shall contain only the SOP pattern and the segment count field used to make the segment number of the first fill data segment transmitted in the previous packet	J.3.4.3	102.1.3.4:M	Yes__ No__	

Downloaded from http://www.everyspec.com

APPENDIX B

Item	Protocol Feature	Reference	Status	Support	Notes
410.1.4.3.e	If no fill data is included in the previous segment, the segment count field shall point to the last segment data plus one	J.3.4.3	102.1.3.4:M	Yes__ No__	
410.1.4.4	Multi-Dwell Data Segments	J.3.4.4	102.1.3.4:M	Yes__ No__	
410.1.4.4.a	Each multi-dwell packet shall contain 6, 11 or 13 consecutive 64-bit data segments	J.3.4.4	102.1.3.4:M	Yes__ No__	
410.1.4.4.b	Unless a channel interruption is detected during the transmission of the packet, each data segment shall contain the next 64 bits supplied by the data link layer for transmission	J.3.4.4	102.1.3.4:M	Yes__ No__	
410.1.4.4.c	The last multi-dwell packet shall contain pad bits and segments as necessary to complete the packet	J.3.4.4	102.1.3.4:M	Yes__ No__	
410.1.4.4.d	The transmitted pad data shall be an alternating one/zero sequence	J.3.4.4	102.1.3.4:M	Yes__ No__	
410.1.4.5	Multi-Dwell Hop Detection	J.3.4.5	102.1.3.4:M	Yes__ No__	
410.1.4.5.a	The physical layer shall have the means of detecting or predicting communications link outages	J.3.4.5	102.1.3.4:M	Yes__ No__	
410.1.4.6	Multi-Dwell Transmit Processing	J.3.4.6	102.1.3.4:M	Yes__ No__	
410.1.4.6.a	Data received from the data link layer for transmission shall be broken into 64 bit segments for transmission	J.3.4.6	102.1.3.4:M	Yes__ No__	
410.1.4.6.b	The data shall be packetized as stated in J.3.4.1	J.3.4.6	102.1.3.4:M	Yes__ No__	
410.1.4.6.c	Packets shall be transmitted consecutively with the segment count field containing the count, modulo 64, of the first segment in the packet until a communications link outage is detected, at which time, the remainder of the data segments in the currently transmitted packet shall be filled with an alternating one/zero pattern	J.3.4.6	102.1.3.4:M	Yes__ No__	

Downloaded from http://www.everyspec.com

APPENDIX B

Item	Protocol Feature	Reference	Status	Support	Notes
410.1.4.6.d	The alternating one/zero pattern shall start soon enough to prevent a receiver from detecting a SOP header and segment count that would prematurely release segments that have been corrupted by a frequency hop	J.3.4.6	102.1.3.4:M	Yes__ No__	
410.1.4.6.e	If the configurable hop recovery time (HRT), is greater than the time remaining to complete the transmission of the current packet, the alternating one/zero sequence shall be extended to the end of the HRT period	J.3.4.6	102.1.3.4:M	Yes__ No__	
410.1.4.6.f	If a hop is detected during the multi-dwell SOP field, multi-dwell segment count field, or during the transmission of the first two segments, the entire multi-dwell packet shall be retransmitted	J.3.4.6	102.1.3.4:M	Yes__ No__	
410.1.4.6.g	The first multi-dwell packet transmitted in a frame shall not contain the multi-dwell SOP field or multi-dwell segment count field	J.3.4.6	102.1.3.4:M	Yes__ No__	
410.1.4.6.h	The SOP and the segment count field shall not be transmitted during a possible frequency hop	J.3.4.6	102.1.3.4:M	Yes__ No__	
410.1.4.6.i	The implementation shall develop an algorithm to establish when possible frequency hops may occur and adjust the timing of the data transmission to avoid transmitting a header during any possible hop	J.3.4.6	102.1.3.4:M	Yes__ No__	
410.1.4.6.1	Hop Data Recovery Time Period	J.3.4.6.1	102.1.3.4:M	Yes__ No__	

Downloaded from http://www.everyspec.com

APPENDIX B

Item	Protocol Feature	Reference	Status	Support	Notes
410.1.4.6.1.a	A configurable variable called the HRT shall be used to determine if the fill data transmitted following a hop shall be extended to ensure that the following multi-dwell synchronization field can be received	J.3.4.6.1	102.1.3.4:M	Yes__ No__	
410.1.4.6.1.b	Because different hop detection/prediction methods flag the hop at different times relative to the beginning of the transmitting RF synthesizer frequency slew, the configured HRT shall be internally adjusted to insure that different DTEs in a network can all use the same configurable HRT	J.3.4.6.1	102.1.3.4:M	Yes__ No__	
410.1.4.6.2	Data Transmitted After a Hop	J.3.4.6.2	102.1.3.4:M	Yes__ No__	
410.1.4.6.2.a	The multi-dwell packet transmitted directly following a communications link outage shall retransmit data starting with the 64-bit segment preceding the segment that was being transmitted when the hop was detected plus sufficient segments to account for the transmitter pipeline delay if appropriate	J.3.4.6.2	102.1.3.4:M	Yes__ No__	
410.1.4.6.3	Termination of Transmission	J.3.4.6.3	102.1.3.4:M	Yes__ No__	
410.1.4.6.3.a	After the final packet of the frame is transmitted, without a hop detected during a data segment containing actual data (not fill data), data transmission shall be terminated	J.3.4.6.3	102.1.3.4:M	Yes__ No__	

Downloaded from http://www.everyspec.com

APPENDIX B

Item	Protocol Feature	Reference	Status	Support	Notes
410.1.4.6.3.b	To prevent receive delays caused by the receiver not being able to determine that the last data segment has been received, a truncated multi-dwell packet shall be sent with the end-of-frame flag set	J.3.4.6.3	102.1.3.4:M	Yes__ No__	
410.1.4.6.3.c	The segment count associated with the end-of-frame flag shall mark the first fill data segment transmitted	J.3.4.6.3	102.1.3.4:M	Yes__ No__	
410.1.4.6.3.d	If no fill data is included in the previous segment, the segment count field shall point to the last segment data plus one	J.3.4.6.3	102.1.3.4:M	Yes__ No__	
410.1.4.6.3.e	The TP timer shall be recalculated based upon reception of the last bit of the segment counter of the truncated multi-dwell packet	J.3.4.6.3	102.1.3.4:M	Yes__ No__	
410.1.4.7	Multi-Dwell Receive Processing	J.3.4.7	102.1.3.4:M	Yes__ No__	
410.1.4.7.a	If the multi-dwell flag was set in the robust synchronization field, the receiver shall buffer the multi-dwell data packet	J.3.4.7	102.1.3.4:M	Yes__ No__	
410.1.4.7.b	The segment count for the first multi-dwell packet in a frame shall be assumed to be zero	J.3.4.7	102.1.3.4:M	Yes__ No__	
410.1.4.7.c	After the last packet bit is received, the receiver shall open the SOP correlation window	J.3.4.7	102.1.3.4:M	Yes__ No__	
410.1.4.7.d	When the SOP pattern is recognized, the segment count shall be decoded using the combination of majority and BCH decoding specified in the robust synchronization field	J.3.4.7	102.1.3.4:M	Yes__ No__	
410.1.4.7.1	Receive End of Frame Detection	J.3.4.7.1	102.1.3.4:M	Yes__ No__	

Downloaded from http://www.everyspec.com

APPENDIX B

Item	Protocol Feature	Reference	Status	Support	Notes
410.1.4.7.1.a	The data remaining in the multi-dwell receive data buffer shall be provided to the higher-level protocol when an end-of-frame condition is detected	J.3.4.7.1	102.1.3.4:M	Yes__ No__	
410.1.4.7.1.b	The end-of-frame condition shall be determined by the multi-dwell end-of-frame flag	J.3.4.7.1	102.1.3.4:M	Yes__ No__	
410.1.4.7.1.c	If the end-of-frame flag is not detected before bit synchronization is lost then all buffered packets shall be released to the upper level protocol for receive processing	J.3.4.7.1	102.1.3.4:M	Yes__ No__	
410.1.4.7.2	Optional Soft Decision Information	J.3.4.7.2	102.1.3.4:M	Yes__ No__	
410.1.4.7.2.a	If fewer than three consecutive segment counts cannot be corrected the correct number of bits shall be supplied to the upper level protocol as to not cause a bit slip, and consequently, the loss of the remaining data in the frame	J.3.4.7.2	102.1.3.4:M	Yes__ No__	
410.1.4.8	Multi-Dwell Majority Logic Overhead Choice	J.3.4.8	102.1.3.4:M	Yes__ No__	
410.1.4.9	Multi-Dwell Overhead	J.3.4.9	102.1.3.4:M	Yes__ No__	
410.1.4.9.a	The multi-dwell protocol introduces an overhead that shall be considered in the network timing calculations	J.3.4.9	102.1.3.4:M	Yes__ No__	
410.1.4.9.b	The six-segment multi-dwell packet shall be used for protocol acknowledgments and other single TDC block messages	J.3.4.9	102.1.3.4:M	Yes__ No__	
410.1.4.9.c	The calculated realized data rate shall be used for the bit rate of all data encapsulated by the multi-dwell protocol	J.3.4.9	102.1.3.4:M	Yes__ No__	
410.1.4.9.1	Terminals Lacking Hop Detection	J.3.4.9.1	102.1.3.4:M	Yes__ No__	

Downloaded from http://www.everyspec.com

APPENDIX B

Item	Protocol Feature	Reference	Status	Support	Notes
410.1.4.9.1.a	Since there is no hop timing information available, the DTE shall assume that the radio will hop at every possible time slot	J.3.4.9.1	102.1.3.4:M	Yes__ No__	
410.1.4.9.1.b	All DMTDs shall implement the capabilities to detect radio hops by monitoring the hop synch output signal from the HAVEQUICK II radio	J.3.4.9.1	102.1.3.4:M	Yes__ No__	
410.1.5	Robust Communications Protocol Network Timing	J.3.5	102.1.3.4:M	Yes__ No__	
410.1.5.1	Net Busy Sensing	J.3.5.1	102.1.3.4:M	Yes__ No__	
410.1.5.2	Response Hold Delay	J.3.5.2	102.1.3.4:M	Yes__ No__	
410.1.5.2.a	If it cannot be guaranteed that the entire acknowledgement can be transmitted on a single hop dwell all robust Type 1 coupled acknowledgements shall use the robust frame format 3 (MV 3:5, 6 segments)	J.3.5.2	102.1.3.4:M	Yes__ No__	
410.1.5.2.b	It should be noted that a multi-dwell format shall be used unless it is known that the current dwell is “long” because it cannot be assumed that network ELAG and HRT will allow a non multi-dwell acknowledgement on the shortest HAVEQUICK II dwell	J.3.5.2	102.1.3.4:M	Yes__ No__	
410.1.5.2.c	All other characteristics of the response that will affect its length (e.g. FEC, TDC) are determined by the network configuration and shall be the same for all users	J.3.5.2	102.1.3.4:M	Yes__ No__	
410.1.5.2.d	In cases where the dwell length is not know, additional TRANSEC delays shall be accounted for by assuming the worst-case frequency hopping (Hop_All)	J.3.5.2	102.1.3.4:M	Yes__ No__	

Downloaded from http://www.everyspec.com

APPENDIX B

Item	Protocol Feature	Reference	Status	Support	Notes
410.1.5.2.1	Multi-Dwell Response	J.3.5.2.1	102.1.3.4:M	Yes__ No__	
410.1.5.2.1.a	All nodes in a network shall use the configured EPRE value to determine if there will be a "long" dwell in which to transmit acknowledgments to determine which acknowledgment method to use for that network	J.3.5.2.1	102.1.3.4:M	Yes__ No__	
410.1.5.2.2	Response Transmission Example	J.3.5.2.2	102.1.3.4:M	Yes__ No__	
410.1.5.2.2.a	Typically, the COMSEC bit synchronization time is not very accurate and may be long enough to push the MI field to the end of the guaranteed "long" dwell time. For this reason, the DTE shall wait to start data transmission on the first hop dwell following the long guaranteed dwell.	J.3.5.2.2	102.1.3.4:M	Yes__ No__	
410.1.5.2.3	Estimation of Multi-Dwell n_1	J.3.5.2.3	102.1.3.4:M	Yes__ No__	
410.1.5.2.4	Receive Processing Delays	J.3.5.2.4	102.1.3.4:M	Yes__ No__	
410.1.5.2.4.a	In order to calculate the reference point for the RHD and TP timers, the receiving DTE shall know the time of arrival of the last bit of the transmission	J.3.5.2.4	102.1.3.4:M	Yes__ No__	
410.1.5.2.4.b	The received data rate of a multi-dwell transmission is not known. For this reason, when a multi-dwell transmission is received, the physical layer shall tag the time of arrival of the final multi-dwell bit.	J.3.5.2.4	102.1.3.4:M	Yes__ No__	
410.1.5.3	Timeout Period (TP)	J.3.5.3	102.1.3.4:M	Yes__ No__	
410.1.5.4	Network Access Delay (NAD)	J.3.5.4	102.1.3.4:M	Yes__ No__	

Downloaded from http://www.everyspec.com

APPENDIX B

Item	Protocol Feature	Reference	Status	Support	Notes
410.1.6	Application Guidance for the HAVEQUICK II Link	J.3.6	102.1.3.4:M	Yes__ No__	
410.1.6.1	Frequency Hop Synchronization	J.3.6.1	102.1.3.4:M	Yes__ No__	
410.1.6.1.a	To avoid the loss of critical data, such as the cryptographic synchronization and/or the protocol SOM patterns, the DTE transmission timing shall be synchronized to the frequency hops through use of hop detection and prediction	J.3.6.1	102.1.3.4:M	Yes__ No__	
410.1.7	Summary	J.3.7	102.1.3.4:M	Yes__ No__	
410.1.7.a	To maintain network timing using the Type 1 timing equations, the RHD shall be extended by inflating the S time for a fixed Type 1 acknowledgment transmit frame format for multi-dwell operation assuming the worst case hop rate (Hop_All)	J.3.7	102.1.3.4:M	Yes__ No__	
410.1.7.b	Since the message transmission time is variable, the time-out period (TP) sync point shall be figured from the final frame flag at the end of the transmission	J.3.7	102.1.3.4:M	Yes__ No__	
410.2	PDU Construction	J.4	102.1.3.4:M	Yes__ No__	
410.2.a	The following examples shall be used to clarify robust PDU transmission order and processing order (i.e. scrambling, FEC, and formation of packets)	J.4	102.1.3.4:M	Yes__ No__	
410.2.1	Robust PDU Header	J.4.1	102.1.3.4:M	Yes__ No__	
410.2.2	User Data	J.4.2	102.1.3.4:M	Yes__ No__	
410.2.2.a	The LSB of each octet passed from the data shall be transmitted first	J.4.2	102.1.3.4:M	Yes__ No__	
410.2.3	Multi-Dwell Flag Set	J.4.3	102.1.3.4:M	Yes__ No__	

Downloaded from http://www.everyspec.com

Item	Protocol Feature	Reference	Status	Support	Notes
410.2.3.a	When the multi-dwell flag is set, the robust frame synchronization field and robust frame format shall be inserted	J.4.3	102.1.3.4:M	Yes__ No__	
410.2.3.b	Scrambling and/or FEC shall be applied to the user data if selected in the robust frame format	J.4.3	102.1.3.4:M	Yes__ No__	
410.2.3.c	The user data shall be put into packets by inserting SOPs and segment counters (BCH [15,7] shall be applied to the segment counters according to the selected multi-dwell transmission format)	J.4.3	102.1.3.4:M	Yes__ No__	
410.2.4	Multi-Dwell Flag Not Set	J.4.4	102.1.3.4:M	Yes__ No__	
410.2.4.a	When the multi-dwell flag is zero the data shall not be put into packets	J.4.4	102.1.3.4:M	Yes__ No__	
410.2.4.b	Only the robust frame synchronization field and robust frame format shall be inserted and scrambling and/or FEC shall be applied to the user data	J.4.4	102.1.3.4:M	Yes__ No__	

A.7.10 Bose-Chaudhuri-Hocquenghem (15, 7) Coding Algorithm

Item	Protocol Feature	Reference	Status	Support	Notes
411	Bose-Chaudhuri-Hocquenghem (15, 7) Coding Algorithm	Appendix K	102.1.3.4:M	Yes__ No__	
411.1	BCH (15, 7) Code	K.3	102.1.3.4:M	Yes__ No__	
411.1.1	Hardware Encoding	K.3.1	102.1.3.4:O. <2>	Yes__ No__	
411.1.2	Hardware/Software Decoding	K.3.2	411.1.1:M 411.1.3:M	Yes__ No__ Yes__ No__	
411.1.3	Software Encoding	K.3.3	102.1.3.4:O. <2>	Yes__ No__	

Downloaded from http://www.everyspec.com

APPENDIX B

A.7.11 Transmission Channel Interfaces

Item	Protocol Feature	Reference	Status	Support	Notes
412	Transmission channel interfaces	Appendix L	M	Yes__ No__	
412.1	Detailed Requirements	L.4	M	Yes__ No__	
412.1.1	Transmission Channel Interfaces	L.4.1	M	Yes__ No__	
412.1.1.1	NRZ Interface	L.4.1.1	M	Yes__ No__	
412.1.1.1.a	A NRZ signal waveform shall be used for the NRZ interface	L.4.1.1	M	Yes__ No__	
412.1.1.1.1	Waveform	L.4.1.1.1	M	Yes__ No__	
412.1.1.1.1.a	NRZ unbalanced waveform shall conform to 5.1.1.7 of MIL-STD-188-114A	L.4.1.1.1	M	Yes__ No__	
412.1.1.1.1.b	NRZ balanced waveform shall conform to 5.2.1.7 of MIL-STD-188-114A	L.4.1.1.1	M	Yes__ No__	
412.1.1.1.2	Transmission Rates	L.4.1.1.2	M	Yes__ No__	
412.1.1.1.2.a	Output transmission rates shall be the following bit rates: 75, 150, 300, 600, 1200, 2400, 4800, 9600, and 16000 bps	L.4.1.1.2	M	Yes__ No__	
412.1.1.1.3	Operating mode	L.4.1.1.3	M	Yes__ No__	
412.1.1.1.3.a	NRZ shall support half-duplex transmission	L.4.1.1.3	M	Yes__ No__	
412.1.1.2	FSK interface for voice frequency channels	L.4.1.2	O	Yes__ No__	
412.1.1.2.a	FSK data modem characteristics shall conform to 5.2.2 of MIL-STD-188-110	L.4.1.2	412.1.1.2:M	Yes__ No__	
412.1.1.2.1	Waveform	L.4.1.2.1	412.1.1.2:M	Yes__ No__	
412.1.1.2.1.a	FSK modulation waveform shall conform to 5.2.2.1 of MIL-STD-188-110	L.4.1.2.1	412.1.1.2:M	Yes__ No__	

Downloaded from http://www.everyspec.com

APPENDIX B

Item	Protocol Feature	Reference	Status	Support	Notes
412.1.1.2.1.b	Characteristic frequencies of FSK interface for voice frequency channels of 600 bps or less shall be 1300 Hz for mark frequency and 1700 Hz for space frequency	L.4.1.2.1	412.1.1.2:M	Yes__ No__	
412.1.1.2.1.c	Characteristic frequencies of FSK interface for voice frequency channels of 1200 bps shall be 1300 Hz for mark frequency and 2100 Hz for space frequency	L.4.1.2.1	412.1.1.2:M	Yes__ No__	
412.1.1.2.2	Transmission Rates	L.4.1.2.2	412.1.1.2:M	Yes__ No__	
412.1.1.2.2.a	Output transmission rates of the FSK interface shall be the following bit rates: 75, 150, 300, 600, and 1200 bps	L.4.1.2.2	412.1.1.2:M	Yes__ No__	
412.1.1.2.3	Operating mode	L.4.1.2.3	412.1.1.2:M	Yes__ No__	
412.1.1.2.3.a	FSK interface shall support half-duplex transmission	L.4.1.2.3	412.1.1.2:M	Yes__ No__	
412.1.1.3	FSK interface for single-channel radio	L.4.1.3	O	Yes__ No__	
412.1.1.3.a	FSK interface data modem characteristics shall conform to 5.1 of MIL-STD-188-110	L.4.1.3	412.1.1.3:M	Yes__ No__	
412.1.1.3.1	Waveform	L.4.1.3.1	412.1.1.3:M	Yes__ No__	
412.1.1.3.1.a	FSK modulation waveform shall conform to 5.1.1 and 5.1.2 of MIL-STD-188-110	L.4.1.3.1	412.1.1.3:M	Yes__ No__	
412.1.1.3.1.b	Characteristic frequencies of FSK interface for single channel radio shall be 1575 Hz for mark frequency and 2425 Hz for space frequency	L.4.1.3.1	412.1.1.3:M	Yes__ No__	
412.1.1.3.2	Transmission rates	L.4.1.3.2	412.1.1.3:M	Yes__ No__	

Downloaded from http://www.everyspec.com

APPENDIX B

Item	Protocol Feature	Reference	Status	Support	Notes
412.1.1.3.2.a	Output transmission rates of the single-channel FSK interface shall be the following bit rates: 75, 150, 300, 600 and 1200 bps	L.4.1.3.2	412.1.1.3:M	Yes__ No__	
412.1.1.3.3	Operating mode	L.4.1.3.3	412.1.1.3:M	Yes__ No__	
412.1.1.3.3.a	Single-channel FSK interface shall support half-duplex transmission	L.4.1.3.3	412.1.1.3:M	Yes__ No__	
412.1.1.4	CDP Interface	L.4.1.4	O	Yes__ No__	
412.1.1.4.1	Waveform	L.4.1.4.1	412.1.1.4:M	Yes__ No__	
412.1.1.4.1.a	CDP modulation waveform shall conform to 5.4.1.4 of MIL-STD-188-200	L.4.1.4.1	412.1.1.4:M	Yes__ No__	
412.1.1.4.1.b	Unbalanced signal waveform shall conform to 5.1.1.7 of MIL-STD-188-114A	L.4.1.4.1	412.1.1.4:M	Yes__ No__	
412.1.1.4.1.c	Balanced signal waveform shall conform to 5.2.1.7 of MIL-STD-188-114A	L.4.1.4.1	412.1.1.4:M	Yes__ No__	
412.1.1.4.2	Transmission Rates	L.4.1.4.2	412.1.1.4:M	Yes__ No__	
412.1.1.4.2.a	Output transmission rate of the CDP interface shall be 16 kbps and 32 kbps	L.4.1.4.2	412.1.1.4:M	Yes__ No__	
412.1.1.4.3	Operating mode	L.4.1.4.3	412.1.1.4:M	Yes__ No__	
412.1.1.4.3.a	CDP interface shall support half-duplex transmission	L.4.1.4.3	412.1.1.4:M	Yes__ No__	
412.1.1.5	DPSK interface for voice frequency channels	L.4.1.5	O	Yes__ No__	
412.1.1.5.a	DPSK modulation data modem (2400 bps) and the PSK modulation data modem (1200 bps) characteristics shall conform to the applicable requirements of MIL-STD-118-110	L.4.1.5	412.1.1.5:M	Yes__ No__	
412.1.1.5.1	Waveform	L.4.1.5.1	412.1.1.5:M	Yes__ No__	

Downloaded from http://www.everyspec.com

APPENDIX B

Item	Protocol Feature	Reference	Status	Support	Notes
412.1.1.5.1.a	DPSK modulation waveform shall conform to Appendix A of MIL-STD-118-110	L.4.1.5.1	412.1.1.5:M	Yes__ No__	
412.1.1.5.1.b	PSK modulation waveform shall conform to 5.3 of MIL-STD-118-110	L.4.1.5.1	412.1.1.5:M	Yes__ No__	
412.1.1.5.2	Transmission Rates	L.4.1.5.2	412.1.1.5:M	Yes__ No__	
412.1.1.5.2.a	Output transmission rate of the DPSK interface shall be 2400 bps	L.4.1.5.2	412.1.1.5:M	Yes__ No__	
412.1.1.5.2.b	Output transmission rate of the PSK interface shall be 1200 bps	L.4.1.5.2	412.1.1.5:M	Yes__ No__	
412.1.1.5.3	Operating mode	L.4.1.5.3	412.1.1.5:M	Yes__ No__	
412.1.1.5.3.a	DPSK interface shall support half-duplex transmission	L.4.1.5.3	412.1.1.5:M	Yes__ No__	
412.1.1.5.3.b	PSK interface shall support half-duplex transmission	L.4.1.5.3	412.1.1.5:M	Yes__ No__	
412.1.1.6	Packet Mode Interface	L.4.1.6	O	Yes__ No__	
412.1.1.6.a	The packet mode interface shall use a modified CCITT X.21 half-duplex synchronous interface, with a CCITT V.10 electrical circuit, for transferring data across the interface between DTE (i.e. the DMTD or C^4I system) and DCE	L.4.1.6	412.1.1.6:M	Yes__ No__	
412.1.1.6.1	Waveform	L.4.1.6.1	412.1.1.6:M	Yes__ No__	
412.1.1.6.1.a	The electrical characteristics of the packet mode interface shall be identical to CCITT V.10 for interfaces to voice band modems	L.4.1.6.1	412.1.1.6:M	Yes__ No__	
412.1.1.6.2	Transmission Rates	L.4.1.6.2	412.1.1.6:M	Yes__ No__	
412.1.1.6.2.a	The DTE device shall be required to accept signal timing from the DCE (radio) at 16 kbps	L.4.1.6.2	412.1.1.6:M	Yes__ No__	

Downloaded from http://www.everyspec.com

APPENDIX B

Item	Protocol Feature	Reference	Status	Support	Notes
412.1.1.6.2.b	The DTE shall be required to synchronize to the DCE signal timing and accept data at the supplied signaling timing rate	L.4.1.6.2	412.1.1.6:M	Yes__ No__	
412.1.1.6.3	Operating Mode	L.4.1.6.3	412.1.1.6:M	Yes__ No__	
412.1.1.6.3.a	The packet mode interface shall support half-duplex transmission	L.4.1.6.3	412.1.1.6:M	Yes__ No__	
412.1.1.7	ASK	L.4.1.7	O	Yes__ No__	
412.1.1.7.1	Waveform	L.4.1.7.1	412.1.1.7:M	Yes__ No__	
412.1.1.7.1.a	The ASK signal shall be a bipolar signal nominally centered around ground	L.4.1.7.1	412.1.1.7:M	Yes__ No__	
412.1.1.7.1.b	The ASK S/N ratio shall be in the range of 0-12 dB	L.4.1.7.1	412.1.1.7:M	Yes__ No__	
412.1.1.7.1.c	The ASK signal shall be demodulated using an optimal bit synchronizer with a BER performance of 1.5 dB from theoretical	L.4.1.7.1	412.1.1.7:M	Yes__ No__	
412.1.1.7.2	Transmission Rates	L.4.1.7.2	412.1.1.7:M	Yes__ No__	
412.1.1.7.2.a	The output transmission rates of the ASK interface shall be the following bit rates: 2400, 4800, 9600, and 16000 bps	L.4.1.7.2	412.1.1.7:M	Yes__ No__	
412.1.1.7.3	Operating Mode	L.4.1.7.3	412.1.1.7:M	Yes__ No__	
412.1.1.7.3.a	The ASK interfaces shall support half-duplex transmission	L.4.1.7.3	412.1.1.7:M	Yes__ No__	

Downloaded from http://www.everyspec.com

APPENDIX C

NETWORK ACCESS CONTROL ALGORITHM

C.1. General.

C.1.1. Scope. This appendix describes the network access control (NAC) algorithm to be used in the DMTD and interfacing C^4I systems.

C.1.2. Application. This appendix is a mandatory part of MIL-STD-188-220. The information contained herein is intended for compliance.

C.2. Applicable documents. Parameter values for the Network Timing Model, described in Appendix C, are provided in a separate document entitled "MIL-STD-188-220 Media Access Configuration (MAC) Parameters and Parameter Values". The MAC parameters and parameter values are available via the CNR Implementation Working Group World Wide Web page: http://www-cnrwg.itsi.disa.mil.

A list of data link parameters and their recommended values is provided in a separate document entitled "MIL-STD-188-220 Protocol Parameters and Values". The Protocol parameters and parameter values are available via the CNR Implementation Working Group World Wide Web page: http://www-cnrwg.itsi.disa.mil.

C.3 Network timing model. The network access control protocol shall be used to detect the presence of active transmissions on a multiple-subscriber-access communications network and shall provide a means to preclude data transmissions from conflicting on the network. The network access control protocol is based on a generic network-timing model. All stations on a network shall use the same network access control protocol and timing parameter values in order to maintain network discipline.

C.3.1 Network timing model definitions. A network station consists of a DCE and a DTE. The DTE is the data device that performs the MIL-STD-188-220 protocol. The DCE includes all equipment external to the DTE (e.g., a radio with or without external COMSEC) that is used to provide a communications channel for the DTE. The interface between the DTE and DCE can operate in synchronous, asynchronous, or packet mode. The interface is synchronous if the DCE provides all required clocks to the DTE. The packet mode interface is a synchronous interface that conforms to CCITT X.21. For synchronous mode, the bit rate (n) is the rate of the transmit clock supplied by the DCE. If the DCE does not provide clocks to the DTE, the interface is asynchronous. For asynchronous mode, the bit rate (n) is the rate at which the DTE transmits. The data link bit rate is defined as the effective bit rate at which the physical layer transmits the data bits. The data link bit rate is usually the same as the bit rate (n) at the physical layer, except for the PSK/DPSK modems (refer to MIL-STD-188-110). The robust protocol case is separately described in Appendix J.

Downloaded from http://www.everyspec.com

C.3.2 Network timing model parameters. The parameters of the network timing model are general enough to model interactions with a wide variety of DCEs. All parameters are specified at the DTE to DCE interface and are in units of milliseconds with a resolution of one millisecond. Parameters may have a value of zero if they are not applicable to the DCE being used. Network timing model parameters are shown in Figure 32. Actual network timing model parameter values are provided in a separate document entitled "MIL-STD-188-220 Media Access Configuration (MAC) Parameters and Parameter Values". The use of identical values is crucial to interoperability, even more important than the values themselves. All stations participating in a network should utilize the values stated in this separate document.

Downloaded from http://www.everyspec.com

APPENDIX C

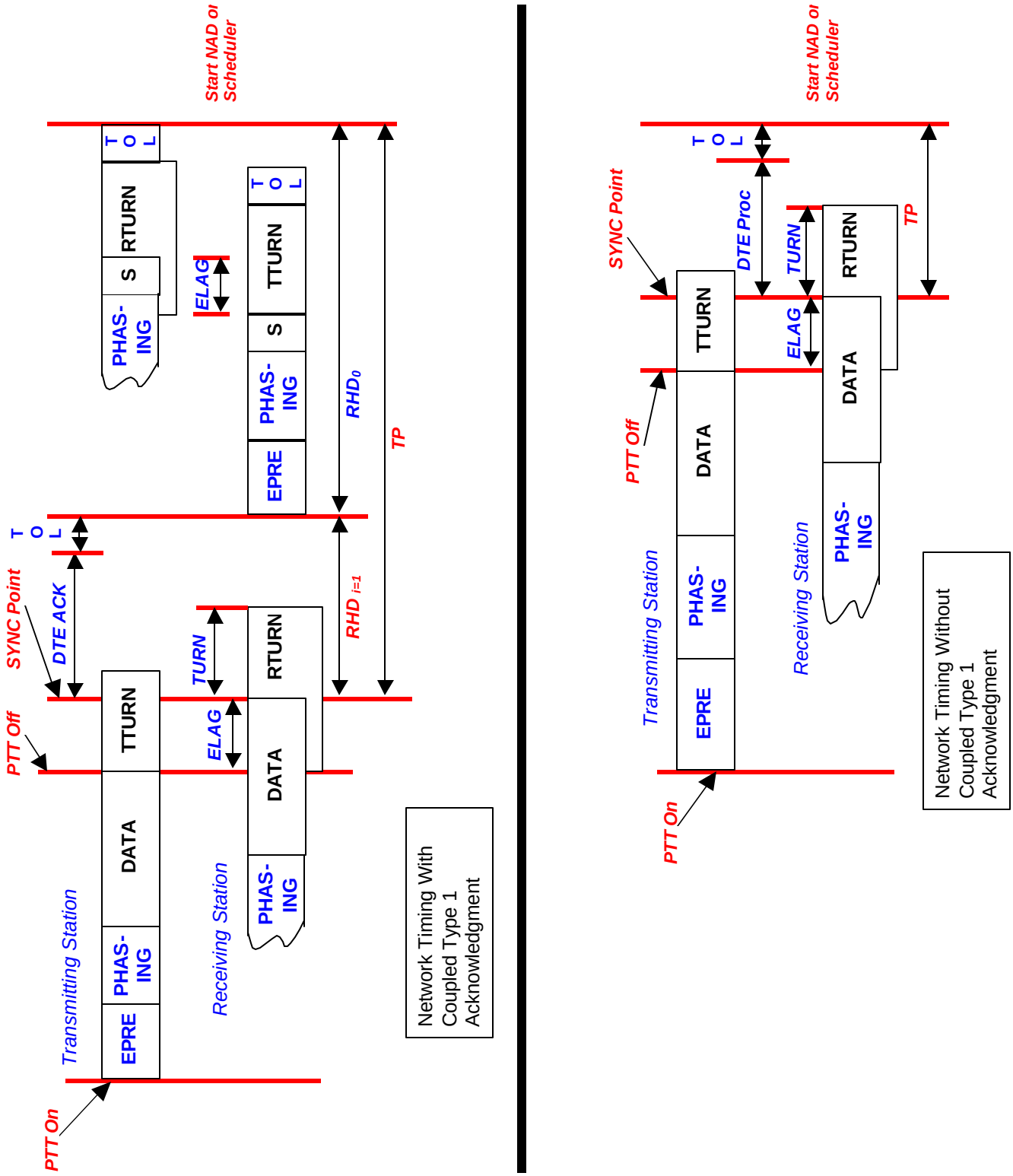

FIGURE 32. Network timing model.

Downloaded from http://www.everyspec.com

C.3.2.1 Equipment preamble time (EPRE). EPRE is the time from when the DTE initiates a transmission, often by asserting Push-to-Talk (PTT), until the transmitting DTE sends to its DCE the first bit of information that will be delivered to the receiving DTE. EPRE is a characteristic of the DCE. It accounts for DCE start up time, including time required for radio power up and transmission of COMSEC and other DCE preambles. EPRE can have a value between 0 and 30,000 milliseconds.

a. For Synchronous mode, EPRE is measured from PTT until the DCE provides a clock to the DTE for its first bit of information. For the purposes of the Network Timing Model, it is assumed that the DTE will begin sending information to the DCE with the first clock edge provided by the DCE. During this time, the DTE sends nothing.

b. For Asynchronous mode, EPRE is measured from PTT until the first signal transmitted by the sending DTE is also transmitted by the sending DCE to receiving DCEs. This accounts for time that the transmitting DCE is not listening to signals sent by the transmitting DTE. During this time, the transmitting DTE may send an alternating sequence of one and zero bits.

c. For Packet mode, EPRE is measured from the time the DTE indicates it is ready to transmit (by asserting the C-lead and transmitting flags on the T-lead as described in 6.3.2.1.2) until the DCE indicates it is ready to accept information from the DTE (by transmitting flags to the DTE on the R-lead as described in 6.3.2.1.2).

C.3.2.2 Phasing transmission time (PHASING). PHASING is the time the DTE shall send an alternating sequence of one and zero bits after the completion of EPRE and prior to sending the first bit of DATA. PHASING can be needed due to characteristics of the DCE, DTE, or both. PHASING can have a value between 0 and 10,000 milliseconds. The DTE shall use the DCE bit rate to compute the number of PHASING bits to transmit.

a. For Synchronous mode, PHASING can be needed if the DCE delivers extraneous clock edges to the DTE prior to the start of a valid, continuous transmit clock or if the DCE provides a transmit clock to the DTE before it is ready to reliably deliver bits from the DTE to receiving DCEs.

b. For Asynchronous mode, PHASING is often needed by the receiving DTE to achieve bit synchronization.

c. For Packet mode, PHASING is always zero.

Downloaded from http://www.everyspec.com

C.3.2.3 Data transmission time (DATA). DATA is the time during which the transmitting DTE sends transmit data to its DCE. Transmit data includes all fields shown in Figure 5. This includes embedded COMSEC information shown in Figure 5b. It also includes transmission of concatenated frames (including bit synchronization between physically concatenated frames) as shown in Figure 3. DATA shall begin immediately after the end of PHASING. The transmitting DTE shall indicate end of transmission immediately after the last bit of data is sent to the DCE.

C.3.2.4 Coupled acknowledgment transmission time (S). S is a special case of DATA, where the Data Field shown in Figure 5 contains only one Type 1 URR, URNR or TEST response frame with the F-bit set and no information field. For these frames, the length of the fields in Figure 5 (including zero bit insertion) used in network timing equations when the Multi-Dwell protocol and convolutional coding are not used shall be:

a. the 64-bit message synchronization field,

b. an optional embedded COMSEC MI field,

c. the 168-bit Transmission Word Count and Transmission Header TDC block, and

d. 80 bits if neither the FEC nor TDC function is selected, 168 bits if only FEC is selected, and 384 bits if both FEC and TDC are selected.

The sum of these components is transmitted at the data link bit rate.

C.3.2.5 Equipment lag time (ELAG). ELAG is equal to or greater than the worst-case time from when the last bit of DATA is sent by the transmitting DTE until the time when the same last bit of DATA is delivered to the receiving DTE by the receiving DCE. ELAG is a characteristic of the DCEs and the propagation delay. It accounts for frequency hopping throughput delays, satellite transmission delays, Packet Mode radio-embedded FEC delays and other related delays. The end of ELAG is the synchronization point for the Timeout Period (TP) and Response Hold Delay (RHD) Timers.

$$ELAG >= MAX(DCE\_Tx\_Delay) + MAX\ propagation\ delay + MAX(DCE\_Rx\_Delay)$$

DCE_Tx_Delay is the time when a bit is sent to the Transmitting DCE until that bit is transmitted. DCE_Rx_Delay is the time from when a bit arrives at the receiving DCE until that bit is delivered to the DTE.

C.3.2.6 Turnaround time (TURN). TURN is the time from the end of ELAG until the end of TTURN or RTURN, whichever is later. TURN is computed using the equation:

$$TURN = Maximum((TTURN - ELAG), (RTURN - ELAG))$$

Downloaded from http://www.everyspec.com

where:

a. TTURN is the time from when the transmitting DTE indicates end of transmission at the end of DATA until the transmitting DCE is ready to begin a new transmit or receive operation. TTURN is a characteristic of the DCE. It includes time when the transmitting DCE sends COMSEC or other postambles after transmitting all DATA.

b. RTURN is the time from when the transmitting DTE indicates end of transmission at the end of DATA until the receiving DCE is ready to begin a new transmit or receive operation. RTURN is a characteristic of the DCE.

c. ELAG may be either larger or smaller than TTURN, but is always less than or equal to RTURN, as shown in Figure 33.

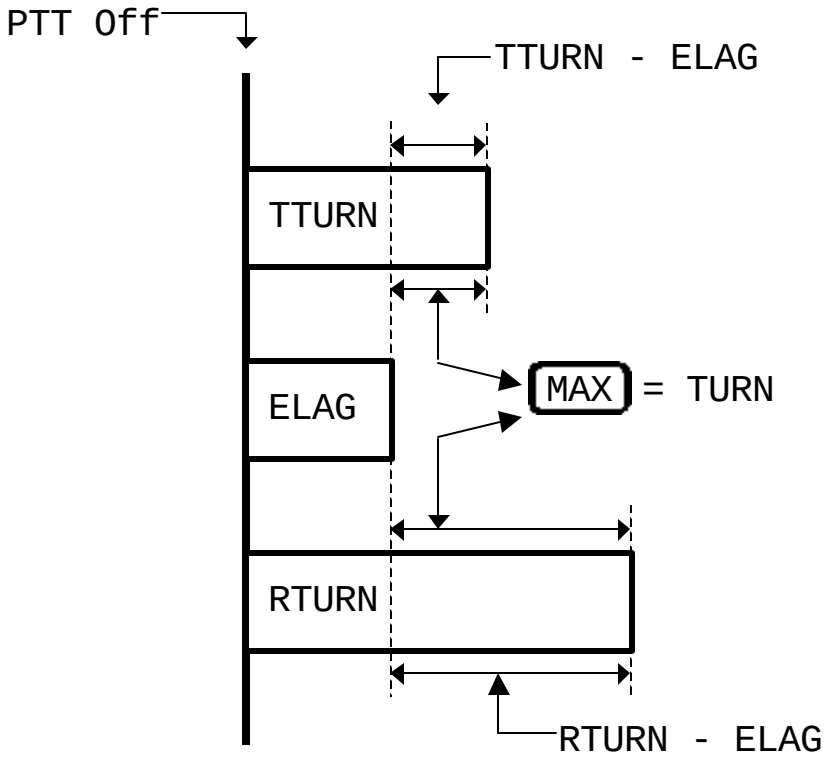

FIGURE 33. Turnaround time (TURN) calculation.

Downloaded from http://www.everyspec.com

C.3.2.7 DTE ACK preparation time (DTEACK). DTEACK is the time from the end of ELAG until the slowest DTE on the network can process any possible Type 1 frame requiring a coupled acknowledgment, prepare the coupled Type 1 acknowledgment frame, and begin sending its coupled acknowledgment frame to its DCE. DTEACK is a characteristic of the DTE. Unless a larger value is known, use the value TURN for the particular radio and operating environment as the default value for DTEACK.

C.3.2.8 DTE processing time (DTEPROC). DTEPROC is the time from the end of ELAG until the slowest DTE on the network can begin sending its next transmission to its DCE after receiving DATA not requiring a coupled, Type 1 acknowledgment. DTEPROC is a characteristic of the DTE. Unless a larger value is known, use the value TURN for the particular radio and operating environment as the default value for DTEPROC.

C.3.2.9 DTE turnaround time (DTETURN). DTETURN is the time required for the DTE to begin a transmit operation when starting in a listening for receive state. DTETURN is the time required for the DTE to stop listening for received data or squelch and to start transmitting (including time for transmit relays for PTT to close). DTETURN shall have a fixed value of 10 milliseconds.

C.3.2.10 Tolerance time (TOL). TOL is a time value used to compensate for variances in the actual realized lag times from a transmitting DTE to a receiving DTE. If the Smallest Actual Lag Time (SALT) is known, the tolerance time required for the network can be optimized. SALT shall be less than or equal to the receiving DCE and transmitting DCE pair with the smallest delay in the network. If SALT is not known, then zero (0) shall be assumed. TOL is calculated by the following equation:

$$TOL >= ELAG - SALT$$

TOL may be greater to allow for other variances (e.g. different radios of the same make and model).

C.4. Network access control. The stations shall implement the following four basic NAC subfunctions:

a. network busy sensing

b. response hold delay (RHD)

c. timeout period (TP)

d. network access delay (NAD)

Downloaded from http://www.everyspec.com

APPENDIX C

C.4.1. Network busy sensing function. The network busy function is used to establish the presence of a data or voice signal at the receiving station due to activity on the net. Network busy sensing for a data signal shall be provided. Network busy sensing for a voice signal may be provided. Network busy may be provided by data network busy sensing or may utilize other more efficient network sensing capabilities, such as, a DCE notification.

C.4.1.1. Data network busy sensing. When receiving a data transmission, network busy shall be detected within a fixed time. Parameter B shall be used to compute this fixed time. For synchronous mode B shall be less than or equal to (32/n) seconds. For asynchronous mode B shall be less than or equal to (64/n) seconds. For packet mode B shall be less than or equal to 250 milliseconds. Upon detection of data network busy, the data link network busy indicator shall be set. Setting the data link network busy indicator shall inhibit all message transmissions, including coupled response messages. The data link network busy indicator shall be reset upon indication from the physical layer that neither voice nor digital data is being detected by the station.

C.4.1.2. Voice network busy sensing. Network busy due to a voice transmission may be detected. If voice transmissions are not detected, this function shall report that the network is never busy due to a voice transmission. Upon detection of voice network busy, the data link network busy indicator shall be set. Setting the data link network busy indicator shall inhibit all message transmissions, including coupled response messages. The data link network busy indicator shall be reset upon indication from the physical layer that neither voice nor digital data is being detected by the station.

C.4.1.3. Network busy detect time. The time allowed to detect data network busy shall be the same for all stations on the network. This Net_Busy_Detect_Time is a key factor in achieving both throughput and speed of service. The Net_Busy_Detect_Time values, as specified in the MAC parameter table, should be used per indicated Radio/System. All stations participating in a network should utilize the values stated in the "MIL-STD-188-220 Media Access Configuration (MAC) Parameters and Parameter Values". The equation below shall be used as a default in cases where the MAC parameter table has not been updated to reflect actual measurements for specific device. Where a communications device provides a signal to detect network busy earlier than the calculated parameter B value, the DTE shall interface to that signal. The MAC parameter tables list the device specific signals that should be supported in order to use the timing values specified. Where a communication media provides capabilities to detect data network busy more quickly, the use of these capabilities has been reflected in the MAC parameter table Net_Busy_Detect_Time values. In these cases, Net_Busy_Detect_Time can be set to reflect the capabilities of the media. Where the communication media does not provide special capabilities or these capabilities cannot be used by all stations on the network, the station shall examine received data to detect data network busy. In these cases, the time allowed to detect data network busy shall be given by the formula:

$$\text{Net\_Busy\_Detect\_Time} = \text{EPRE} + \text{ELAG} + \text{B} + \text{TOL}$$

Downloaded from http://www.everyspec.com

APPENDIX C

NOTE: Parameters EPRE and ELAG are initialized locally or learned using the XNP messages described in Appendix E. Net_Busy_Detect_Time can also be learned using the XNP messages described in Appendix E or from the MAC parameter tables.

C.4.2. Response hold delay. An RHD_0 period and an individual RHD value are calculated to determine the time that an addressed receiving station delays before sending a Type 1 response PDU upon receiving a Type 1 command PDU (UI and TEST) requesting acknowledgment (that is, P-bit set to 1 and addressed to the station's individual or special address). The RHD controls network access and the NAD algorithm is suspended during this period. An RHD_0 period is the worst-case amount of time that a single response takes. The individual RHD is the time at which a particular station waits before accessing the network. If the scheduler is running, immediate scheduling should be used for Type 1 Acknowledgment. The individual RHD value to be used shall be determined by the position of the receiving station's individual or special address in the PDU destination portion of the address field. The Reserved Address (0) in the destination portion of the address field shall be ignored. That is, when calculating an individual RHD value, the Reserved Address shall not be considered to occupy a position in the destination portion of the address field. The calculated values for RHD_i, TP, and NAD are computed to the nearest millisecond. The RHD time shall start precisely at the end of ELAG. All stations on a subnetwork shall use the same values in calculating RHD. These values can be initialized locally or learned, using the XNP messages described in Appendix E.

a. The RHD_0 period shall be calculated by the following formula:

$$RHD_0 = EPRE + PHASING + S + ELAG + TURN + TOL$$

b. The TP shall be calculated by all stations on the network/link as follows:

$$TP = (j * RHD_0) + TOL + Maximum(DTEACK, TURN)$$

where j = The total number of destination link addresses - to include special and individual but not group or global addresses - for this transmitted frame. The transmitting station shall not include special address 3 in the total for j, and the value of all non-integer variables (that is, RHD_0, TOL, and TURN) in the TP equation are rounded to the nearest one thousandth.

c. The individual addressed station's response hold delay (RHD_i) shall be calculated by

$$RHD_i = (i - 1) * RHD_0 + Maximum(DTEACK, TURN) + TOL$$

Downloaded from http://www.everyspec.com

The variable i (where $1 \leq i \leq 16$) is the individual station's position in the destination portion of the address field.

C.4.3 Timeout period. TP is the time all stations shall wait before they can schedule the NAD. During this window of time, the transmitting station shall wait to receive the anticipated Type 1 coupled acknowledgment response frame(s), if any, from all applicable addressed stations. The parameter values used to compute TP shall be the same for all stations on a subnet unless immediate retransmission has been selected. When immediate retransmission has been requested, the sending station shall compute the timeout period using only individual addresses and special addresses 1 and 2. All receiving stations shall compute the timeout period using the individual addresses and special addresses 1, 2 and 3. The calculated value of TP is computed to the nearest millisecond. The TP time shall start precisely at the end of ELAG. A retransmission of a Type 1 P-bit frame shall be executed whenever TP has been exceeded without expected acknowledgments having been received from all Type 1 individual and special destinations. Prior to retransmission, the address field of the frame shall be modified to delete the destination station(s) that previously acknowledged the frame. Operationally, TP shall be used as follows:

a. Upon termination of a message transmission that requires an immediate response, the transmitting station shall set the TP timer. If the transmitting station does not receive all the expected responses (TEST, URR, or URNR) within the TP, and if the number of transmissions is less than the Maximum Number of Transmissions data link parameter, the station shall retransmit the frame when it is the highest precedence frame to send. For all stations, if a Type 1 (P-bit=0), Type 2 or Type 4 frame is received when a response-type frame is expected, the newly received frame shall be processed. The RHD and TP timers shall not be suspended and the TP procedures in use for the Type 1 (P-bit=1) frame shall be continued. Response procedures, if any, for the newly received frame shall commence after the conclusion of the ongoing TP procedures. If the unexpected frame is a Type 1 (P-bit=1) frame the current TP procedure is aborted and the newly received Type 1 (P-bit=1) TP procedure shall be started.

b. After a station transmits or receives data that does not require a Type 1 coupled acknowledgment, and is not itself a Type 1 coupled acknowledgment, all stations except those using RE-NAD shall compute TP as:

$$TP = \text{Maximum}(DTEPROC, TURN) + TOL$$

c. Upon receiving a Type 1 coupled acknowledgment, a station shall determine whether it thinks a timeout period is already in progress. If no timeout period is in progress, or if the acknowledgement contains an unexpected destination or source address, the receiving station shall compute TP using the following equation and

Downloaded from http://www.everyspec.com

shall start a timeout period precisely at the time the last bit of data for the Type 1 coupled acknowledgment was received.

$$TP = (15 * RHD_0) + TOL + TURN$$

NOTE: RHD_0 is as defined in C.4.2.

C.4.4 Network access delay. NAD is defined as the time a station with a message to send shall wait to send a frame after the TP timer has expired. NAD discipline is based on an infinite sequence of "slots" that begin when the TP timer has expired. Slots are defined to be long enough so that all stations on the network will detect a station transmitting at the beginning of a slot prior to the beginning of the next slot. The duration of each slot is Net_Busy_Detect_Time. All transmissions, except the coupled acknowledgments, shall begin at the start of the next NAD slot.

There are five schemes for calculating NAD. The five schemes are defined below. Two of the access schemes, DAP-NAD and R-NAD, shall be available to all network participants using Synchronous Mode. Four schemes (R-NAD, P-NAD, H-NAD and DAP-NAD) compute a value F for each station on the net. The F value is the number of NAD slots that each station will wait before transmitting, if it has any information to send.

The random network access delay (R-NAD) scheme provides all stations with an equal chance to access the network. The prioritized network access delay (P-NAD) scheme ensures the highest precedence station with the highest priority message will access the network first. In the case of RE-NAD, network access delay is computed by the radio. With RE-NAD the DTE (DMTD or C^4I system) does not compute network access delay but does schedule channel access opportunities at which an access attempt can be initiated by the DTE. DAP-NAD, like P-NAD, ensures the highest priority message will access the network first. It does not ensure first access by highest precedence station however. The hybrid network access delay (H-NAD) scheme combines random access with the preferential access by frame priority. The random and hybrid schemes might result in a collision (the same NAD value for two stations). The P-NAD and DAP-NAD schemes always produce a unique NAD value for each station. In all of the NAD schemes, if the TP timer is active, the stations with frames to transmit shall wait for the TP timer to expire before the NAD is started. If the TP timer is not active, the station shall calculate its NAD using the proper NAD scheme for the network. Each NAD scheme produces a set of allowed access periods. The network may be accessed only at the beginning of one of those periods. If a station using P-NAD, DAP-NAD or H-NAD is waiting for its NAD time and a higher priority frame becomes available for transmission, the station may shorten its NAD time to a time it would have computed if it had computed its original NAD time using the new, higher frame priority. Below are the frame reception and transmission procedures:

Downloaded from http://www.everyspec.com

APPENDIX C

a. A station shall analyze a received frame to determine if a TP timer shall be set. After the frame check sequence has been verified, the address and control fields are analyzed. If the received frame is either a UI or TEST frame and the poll bit is set to 1, then a TP timer is set. Any other pending frames for transmission shall be placed on hold. If the received frame was not a UI or TEST frame with the poll bit set, a NAD value shall be computed and initiated after the TP timer expires. An R-NAD or H-NAD value shall be calculated and initiated if the network busy status is clear. DAP-NAD values need to be recalculated after each transmission. The calculated value of NAD is rounded to the nearest millisecond.

b. If a station does not have a frame to transmit, it shall compute a NAD time using routine priority for its calculations. If the NAD time arrives before a frame becomes available to transmit or frame(s) are not yet encoded for transmission, the station shall compute and use a new NAD time. The starting time for the new NAD shall be the same as the starting time for the NAD that was just completed. The F value used in computing the NAD shall be the sum of the F value used in the NAD just completed, plus a value dependent on the NAD in effect.

1) For P-NAD this value shall be (NS + 1). This creates another group of NAD slots for all stations on the network. Adding this value at all stations preserves the algorithmic collision prevention property of P-NAD.
2) For R-NAD this value shall be [(3/4) * NS + 1]. Adding the same constant value at all stations preserves the random property of R-NAD.
3) For H-NAD this value shall be 1 if the station has an urgent or priority frame to transmit and (Routine_MAX + 1 - Routine_MIN) if a station has only a routine frame(s) or no frame(s) to transmit. The value 1 preserves the intent of H-NAD that is to grant preferential network access to stations with urgent or priority frames to send. The value (Routine_MAX + 1 - Routine_MIN) preserves the random property of H-NAD for stations with only routine frames to send.
4) For RE-NAD, F is not used.
5) For DAP-NAD this value shall be (NS). This creates another group of NAD slots for all stations on the network. Adding this value at all stations preserves the algorithmic collision prevention property of DAP-NAD.

c. All stations on the network shall continue to sense the link for data or voice network busy and shall withhold transmission until the appropriate NAD period has expired. NAD shall be calculated using the formula:

$$NAD = F * Net\_Busy\_Detect\_Time + MAX(0, F-1) * DTETURN$$

Downloaded from http://www.everyspec.com

where Net_Busy_Detect_Time is as defined in C.4.1.3 and DTETURN is as defined in C.3.2.9.

C.4.4.1 Random network access delay. The R-NAD calculation method shall ensure that each station has an equal chance of accessing the network. The random nature also may provide a resolution if an access conflict occurs. Each attempt to access the network potentially can use a NAD value different from the station's previous value. The integer value of F shall be obtained from a pseudorandom number generator. The range of the pseudorandom number depends on the number of stations (NS) in the network. F shall be an integer value (truncated) in a range between 0 and (3/4)NS. NS can be learned through the XNP join exchange, or fixed by a system parameter established at initialization.

C.4.4.2 Prioritized network access delay. The P-NAD calculation method shall ensure that the network access precedence order assigned to subscribers is preserved. Each station shall calculate three unique P-NAD values, one for each of the three frame precedence levels. The integer value of F shall be calculated as:

$$F = SP + MP + IS$$

where:

SP = the station priority:
SP = (subscriber rank -1) for the initial transmission; and
SP = 0 for subsequent transmissions.

MP = the message precedence:
MP = 0 for all urgent messages;
MP = (NS + 1) for all priority messages;
MP = 2 * (NS + 1) for all routine messages,
where NS is the number of subscribers on the network.

IS = the initial/subsequent factor:
IS = 0 for the initial transmission, and
IS = NS for subsequent transmissions.

Only one station on the network uses the subsequent factor. That is the station that transmitted last on the net. However, transmissions of coupled Type 1 acknowledgments do not count as transmissions for the purpose of determining which station transmitted last.

C.4.4.3 Hybrid network access delay. The H-NAD calculation method ensures that network access delay times are shorter for higher priority frames, while maintaining equal access chances for all stations. Each priority level has a distinct range of pseudorandom F values determined by

Downloaded from http://www.everyspec.com

the NS in the subnetwork, the network percentage of the particular priority level frames, and the traffic load. The integer value of F shall be calculated as

$$F = MIN + RAND * (MAX - MIN)$$

where:

RAND = pseudorandom number in the range 0.0 to 1.0

MAX and MIN are integer values defining the ranges:

Urgent_MIN = 0, for urgent frames

Urgent_MAX = USIZE + 1, for urgent frames

Priority_MIN = Urgent_MAX + 1, for priority frames

Priority_MAX = Priority_MIN + PSIZE + 1, for priority frames

Routine_MIN = Priority_MAX + 1, for routine frames

Routine_MAX = Routine_MIN + RSIZE + 1, for routine frames

USIZE = the additional number of random numbers generated for urgent frames

PSIZE = the additional number of random numbers generated for priority frames

RSIZE = the additional number of random numbers generated for routine frames

where the minimum MIN/MAX range size is 2.

The additional range sizes (xSIZE) are integers based on the percent of frames expected at a specific priority level (%priority_level) and the NS adjusted (ADJ_NS) by the expected traffic load (TL). NS, %priority_level, and traffic load, may be input using the XNP messages or by initialization input. xSIZE is rounded to the nearest non-negative integer.

USIZE = %U * ADJ_NS, %U = percentage of urgent frames (default 25%)

PSIZE = %P * ADJ_NS, %P = percentage of priority frames (default 25%)

RSIZE = %R * ADJ_NS, %R = percentage of routine frames or 100% - (%U + %P) (default 50%)

Downloaded from http://www.everyspec.com

where the adjusted NS increases if the expected traffic load is heavy and decreases if the traffic load is light. The minimum random number range at each of the three priority levels is 2, so 6 stations are subtracted from the adjusted NS.

ADJ_NS = INTEGER (NS * TL) -6 or = 1 (whichever is greater)

where:

TL = 1.2 Heavy Traffic Load
= 1.0 Normal Traffic Load
= 0.8 Light Traffic Load

C.4.4.4. Radio embedded network access delay (RE-NAD).

C.4.4.4.1. RE-NAD media access. The radio embedded network access delay (RE-NAD) DTE data link layer uses a channel access protocol between the DTE (DMTD or C^4I system) and DCE which is influenced by radio net voice activity. When the continuous scheduler interval timer (Tc) expires and the previous series of concatenated frames was successfully transmitted, a new series of frames is sent to the physical layer. If there is a pending series of concatenated frames, its transmission is requested again. It should be noted that the physical layer holds the series of concatenated frames when channel access has been denied. If channel access was denied a new Tc timer is calculated and channel access for transmission of the pending series of concatenated frames is requested when the new Tc timer expires. If a higher precedence individual frame becomes available for transmission, the concatenated frames shall be re-built to include the higher precedence frame.

For the Type 1 acknowledgment, the RE-NAD portions in both DTE and DCE are suspended and channel access is controlled by the RHD and TP processes. The RE-NAD algorithm is resumed following expiration of the TP timer.

C.4.4.4.1.1. Random schedule interval. In order to achieve high performance radio network communication, efficient channel access and multi-level precedence, a fast attack slow decay RE-NAD algorithm is implemented in the DTE. This algorithm uses the “continuous scheduler” concept to provide a random distribution of timing for channel access via the Tc interval timer. The Tc interval timer is the sum of a voice component and a data component. The voice component is a fast attack slow decay function permitting voice to immediately slow down the scheduler (fast attack) while gradually speeding the scheduler back up to normal as long as there isn’t any voice on the radio net (slow decay). It is described more fully in C.4.4.4.1.2. The data component is a randomization around net size and the Fload algorithm. It is discussed in C.4.4.4.1.3 and C.4.4.4.1.4.

Downloaded from http://www.everyspec.com

The value of Tc is recalculated after every local transmission attempt from the expression:

Tc = voice factor + uniform_random(SchedulerInterval)

where uniform_random (SchedulerInterval) is a uniform random number function using the range 0-SchedulerInterval. Uniform_random returns an integer value.

C.4.4.4.1.2. Voice component. The voice factor in C.4.4.4.1.1 is a value bound by its minimum and maximum limits. The maximum voice factor (range=0.3 to 10.0 sec) is the upper bound on the value of the voice factor. The minimum voice factor (range=0.3 to 10.0 sec) is the lower bound on the value of the voice factor. The initial voice factor shall be the minimum voice factor value. Detection of voice on the radio net increments the voice factor value while the absence of voice decrements the voice factor value.

C.4.4.4.1.2.1. Fast attack. Voice detection shall increment the voice factor by the voice factor increment value (range=0.0 sec to 10.0 sec) as indicated below:

a. If the voice factor is at the minimum voice factor value (see C.4.4.4.1.2), the scheduler is incremented immediately to protect the next voice hit.

b. Otherwise, the increment occurs at the next scheduler expiration

The voice factor value is upper bounded by the maximum voice factor (see C.4.4.4.1.2).

C.4.4.4.1.2.2. Slow decay. The voice factor shall be decremented every time the NAD expires by the voice decrement value (range=0.0 sec to 10.0 sec). The voice factor value is lower bounded by the minimum voice factor.

C.4.4.4.1.3. Calculation of the scheduler random parameter. The parameter SchedulerInterval depends on queue lengths and the number of net members transmitting data as follows:

SchedulerInterval = [NADScaleTime * (NumActiveMembers / 16)] * Fload
minimum=(settable range=0.1 to 3.0 sec)
maximum=(settable range=1.0 to 50 sec)

where:

NADScaleTime = adjustment factor (range=0.1 – 5.0 sec).

NumActiveMembers = number of net members actively transmitting data on the net. All net members are within two intranet hops of the node determining this value. Continuous

Downloaded from http://www.everyspec.com

calculation of this value shall be performed based on the number of known active data transmitters on the net. A station's own status is included in this count.

Neighbor agent timer = this timer (range = 1 – 600 sec) is used to age out net member active status. When this timer expires and a data transmission has not been received from a net member, that net member is marked inactive. This timer should be greater than the topology update timer to assure net members are not aged out between topology updates in fragmented nets.

SchedulerInterval shall be recomputed after every transmission by the DTE.

C.4.4.4.1.4. Calculation of the load factor (Fload). The Load Factor is computed in a fully distributed manner by every node in the net. In the transmission header, the six least significant bits of the second octet (as indicated in the Queue Precedence and Queue Length subfields of Figure 10, see 5.3.1) are dedicated to transmitting the number of messages at the highest priority level remaining in the information frame queue; the remaining two bits are spare. The two least significant bits (LSB) indicate the level of the highest priority message. The four most significant bits (MSB) indicate the number of frame concatenations required to transmit all of the messages at the above priority level. The four MSB are quantified as shown in Table XIV.

TABLE XIV. Calculation of the load factor.

Number of Concatenated Frames Required	Bit Pattern 7 6 5 4
0.0	0 0 0 0
0.0 (exclusive) - 0.5 (inclusive)	0 0 0 1
0.5 (exclusive) - 1.0 (inclusive)	0 0 1 0
1.0 (exclusive) - 2.0 (inclusive)	0 0 1 1
2.0 (exclusive) - 3.0 (inclusive)	0 1 0 0
3.0 (exclusive) - 4.0 (inclusive)	0 1 0 1
4.0 (exclusive) - 5.0 (inclusive)	0 1 1 0
> 5.0	0 1 1 1

Downloaded from http://www.everyspec.com

APPENDIX C

The Load Factor takes on values such that 1.0 < Fload < 18.0. The minimum value of 1.0 places an upper limit on the speed of the scheduler per the Fload description. The value of 18.0 provides a useful range for adaptation of the scheduler due to differing traffic loads, and is divisible by 2 and 3, resulting in integer ranges for the three different precedence values. Higher values of the Load Factor indicate that the node has shorter queues of equal or lesser priority. In cases of high load factor, it is desirable to increase the scheduling interval to give neighboring nodes with higher priority or longer queues of equal priority more opportunities to transmit. The Load Factor is calculated after every expiration of the scheduler, prior to calculation of the next expiration.

ALGORITHM: Calculation of the Load Factor, Fload.

1. Determine the number of unique neighboring node priority levels broadcast by all the nodes including this one. This data is taken from the last transmission received from each neighboring node.

2. Divide the interval 0.0 to 18.0 into equal segments, one per unique announced priority level. The first segment (0.0 to 9.0 for two levels) is allocated to the highest priority traffic. Define the Segment Offset as the lower bound of the chosen segment. For two precedence levels, the Segment Offset is 0.0 for the highest precedence and 9.0 for the Lowest Precedence. Define the Segment width equal to 18.0/Number of precedence levels. For all three precedence levels, each precedence level has a segment width of 6.0.

3. Each segment is subdivided into n unique levels where n is the number of unique quantified concatenated frame lengths reported by the neighboring nodes and the node doing the computation. In the case of only one length, all nodes use the midpoint of the segment. In the case of multiple lengths, these lengths are ordered from longest to shortest (1 -> n). In the following computation of Load Factor, a node would use a value of m determined by its position in that ordering. All nodes with the longest quantified length use the value 1, while those with the shortest use the value n for variable m in the following equation:

$$\text{Load Factor} = \text{Segment offset} + (\text{Segment width} * m)/(n+1)$$

where

Segment Offset is the Lower bound of the segment chosen by precedence level from step 2.

Segment Width is the maximum Load Factor (18) divided by the number of unique precedence levels

Downloaded from http://www.everyspec.com

APPENDIX C

n is the number of unique quantified queue lengths.

m is this nodes positioning within the ordering of quantified queue lengths.

TABLE XV. Calculation of the load factor -- example 1.

Node Number	Highest Precedence	Quantified Queue Length 7 6 5 4	Load Factor
1	Routine	0 0 0 1	12.0
2	Routine	0 0 0 1	12.0
3	Routine	0 0 1 1	6.0
4	Routine	0 0 1 1	6.0

All nodes compute the load factor in the following manner.

1. There is only 1 unique priority level (Routine).

2. The Segment is determined to encompass the whole range 0->18.

3. The Segment Offset is the lower bound (0).

4. The Segment Width is the entire range (18).

5. Two unique Quantified Queue Lengths are noted. The value of n is set to 2.

6. The unique Quantified Queue Lengths are ordered from longest to shortest (3,1).

7a. Nodes 1 and 2 note that their positioning in this sequence is 2 and set m to 2.

7b. Nodes 3 and 4 note that their positioning in this sequence is first and set m to 1.

8a. Nodes 1 and 2 compute their load factor from the equation.

Load_Factor = Segment Offset + (Segment Width*m)/(n+1)

Downloaded from http://www.everyspec.com

= 0 + (18 * 2) / (2+1) = 12

8b. Likewise, Nodes 3 and 4 do the Load Factor computation.

Load_Factor = 0 + (18 * 1) / (2+1) = 6

TABLE XVI. Calculation of the load factor -- example 2.

Node Number	Highest Precedence	Quantified Queue Length 7 6 5 4	Load Factor
1	Routine	0 0 0 1	13.5
2	Routine	0 0 0 1	13.5
3	Urgent	0 0 1 0	6.0
4	Urgent	0 0 1 1	3.0

All nodes compute the load factor in the following manner.

1. There are two unique precedence levels (Urgent and Routine).

2. The load Factor Range is divided into two segments 0-9, 9-18. The segment 0-9 is reserved for Urgent, while the segment 9-18 is reserved for Routine.

3. The Segment Offset is the lower bound of the segment. The Segment Offset is 0 for Urgent and 9 for Routine.

4. The Segment Width for both precedence levels is the entire range (0->18) divided by the number of precedence levels. Segment Width = 18/2 = 9.

Nodes 1, 2 perform the following computations:

5. There is only one Quantified Queue Length. Thus, n is equal to 1 and since there is only 1 length both nodes use the first position in the sequence and set m to 1.

6. Load Factor = Segment Offset + (Segment Width*m)/(N+1)
= 9 + (9 * 1) / (1+1) = 13.5

Downloaded from http://www.everyspec.com

Nodes 3,4 perform the following computations.

7. The unique Quantified Queue Lengths are ordered from longest to shortest (3,2). There are two unique lengths which sets the value of n to 2.

8. Node 3 has a length of 2, which occupies position 2 in the ordering of step 7. Because it occupies position 2, the value of m is set to 2.

   Load_Factor = Segment Offset + (Segment Width*m)/(n+1)
   = 0 + (9 * 2) / (2+1) = 6

   Node 4 has length of 3, which occupies position 1 in the ordering of step 7. Node 4 sets its value of m to 1.

   Load_Factor = Segment Offset + (Segment Width*m)/(N+1)
   = 0 + (9 * 1) / (2+1) = 3

C.4.4.4.1.5 <u>100 msec Immediate mode scheduling</u>. In lightly loaded nets quicker access to the radio net medium is provided through the "100 msec immediate mode" scheduling all types except Type 1 ACK PDUs as follows:

a. If the scheduler expires and the following conditions are met: (1) there are no concatenated frames awaiting transmission, (2) the RE-NAD voice factor is at its minimum value, and (3) all other members of the net reported transmission queue lengths of zero; set Immediate Mode to READY. Compute and start the next random interval of the continuous scheduler (Tc).

b. When an information PDU arrives for transmission and Immediate Mode is READY, cancel the previously scheduled Tc and assign a scheduling interval as follows:

   Tc = 100 msec

c. When this is done, Immediate Mode is set to ON. The 100 msec allows an opportunity for messages which have been segmented/fragmented/received to be piggy-backed into the same series of concatenated frames. This increases efficiency without imposing delay.

d. When the scheduler expires due either to the Tc scheduled as a result of the immediate mode operation or due to normal continuous operation, and I-frame(s), S-frame(s), U-frame(s) or a frame concatenation are pending, perform

Downloaded from http://www.everyspec.com

concatenated frame processing as normally is done. Compute and start the next random interval of the continuous scheduler (Tc) in the normal manner.

e. Any traffic, voice or data, detected during the immediate mode operation shall abort the 100 msec Immediate Mode and set it to OFF. The scheduler is then computed in the normal manner.

C.4.4.4.1.6 Immediate mode scheduling. If the PDU is Type 1 (ACK or UnACK), the Tc is set to 0.0 seconds which permits net access to be controlled without a randomized scheduler influence.

C.4.4.4.2 RE-NAD network access. When the precedence level of the transmission changes, the DTE shall set the precedence level of the new transmission. This precedence level will correspond to the frame with the highest precedence value within the series of concatenated frames.

C.4.4.4.3 Network busy sensing and receive status. The presence of multiple stations on a single random access communications network requires voice/data Network Busy Sensing and the use of network access control to reduce the possibility of data collisions on the net. The combined Data and Voice Nets require cooperation between the DTE (DMTD or C^4I system) and the DCE.

The DCE indicates the presence of receive data and voice by signaling the following conditions:

a. Data being received,

b. Voice operation,

c. Idle/Transmission completed,

d. Data being transmitted.

The transmission of data by the DTE is allowed only in the Idle/Transmission completed state.

C.4.4.5 Deterministic adaptable priority-network access delay (DAP-NAD). DAP-NAD is a method of generating Network Access Delays to control network accesses which provides every subscriber with an equal opportunity (when considering multiple access periods and equal message priorities) to use a radio/wireline net. It is deterministic in that every subscriber has an opportunity to access the network and given the device, network, and protocol parameter settings, the maximum time for network access can be calculated.

The mechanism for providing equal network access is to give the first “access opportunity” (the time at which a subscriber may transmit a message if one is available) to a different subscriber at

Downloaded from http://www.everyspec.com

each "network access period" (the time between message transmissions when all subscribers are determining when to transmit) and to give later access opportunities to all other subscribers in sequence. Each subscriber is assigned a Subscriber Rank that is in the range of 1 to the Number of Subscribers (NS in the equations that follow). During the first network access period, subscriber number 1 is given the first access opportunity, subscriber number 2 is given the second access opportunity, subscriber number 3 the third access opportunity, etc. After the last subscriber has been given an access opportunity, subscriber number 1 is again given an access opportunity, followed by subscriber number 2, etc. This continues until a subscriber transmits a message. The subscriber that transmits the message shall increment the First Subscriber Number subfield contained in the last message it received and place the number in the First Subscriber Number subfield of the Transmission Header. The very next access period (the first DAP-NAD time slot following the message transmission) is reserved, such that any node can interrupt the network in case the network priority is lower than the precedence of the message they have to transmit. This reserved slot is only used when the network is in Priority or Routine mode. All nodes having messages to transmit with a precedence that is greater than the current network priority would transmit a short Urgent control frame in the reserved slot. Upon receipt of this Urgent control frame or detection of a network busy condition during the reserved slot, all receiving nodes would assume that the network priority had gone to Urgent and act accordingly. In this manner, transmissions in the reserved slot would serve to interrupt the operation of a network operating at Priority or Routine causing it to elevate to Urgent mode. The next station authorized to access the network is the First Station Number specified in the Transmission Header of the transmission that occurred before reverting to Urgent mode. Each subscriber calculates different NAD times for each network access period. There are three network priority modes: urgent, priority and routine. The reserved slot is not provided when the network is in the Urgent mode. The calculations of the NAD times are discussed in the following paragraphs.

a. Network in Urgent Mode. The first NS number of access opportunities of a network access period are reserved for subscribers that have an urgent message awaiting transmission. Those subscribers that do not have any urgent messages awaiting transmission shall wait for at least the NS+1 access opportunity before they can transmit. The next NS number of access opportunities of the network access period are reserved for subscribers that have a priority (or an urgent if one has become available since the previous access opportunity) message awaiting transmission. Those subscribers that have only routine messages awaiting transmission shall wait for at least the 2NS+1 access opportunity before transmitting. Those subscribers that have any messages awaiting transmission, regardless of priority, by the 2NS+1 access opportunity can transmit when their calculated access opportunity arrives.

b. Network in Priority Mode. The first NS+1 access opportunities are reserved. Access opportunities 2 through NS+1 are reserved for subscribers that have an urgent or priority message awaiting transmission. Those subscribers that only

Downloaded from http://www.everyspec.com

have routine messages awaiting transmission shall wait for at least NS+2 access opportunity before they can transmit. Those subscribers that have any messages, regardless of priority, awaiting transmission by the NS+2 access opportunity can transmit when their calculated access opportunity arrives. The very first network access period following completion of the transmission while in Priority mode shall be reserved for any station with an Urgent message to notify all other subscribers to revert back to Urgent network mode. After reverting to Urgent mode, the subscriber with the station number matching the First Subscriber Number in the Transmission Header of the transmission completed just before the reserved slot shall have the first network access opportunity. The network shall then remain in the Urgent mode until all stations have had an opportunity to access the network.

c. Network in Routine Mode. Only the first access opportunity is reserved. After that, any subscriber that has a message, regardless of priority, can transmit when their calculated access opportunity arrives. The very first network access period following completion of the transmission shall be reserved for any station with an Urgent or Priority message to cause the network to go to Urgent mode. If no station transmits during the reserved slot, the network remains in the mode designated by the Data Link Precedence field in the Transmission Header provided by the last station accessing the network. Routine mode remains in effect until a message is transmitted.

Figure 34 shows an example of the DAP-NAD key. And Figure 35 shows an example of using the key.

Downloaded from http://www.everyspec.com

APPENDIX C

NP = **N**etwork **P**recedence, highest MAC precedence of any frame in the last transmission (NP = URGENT this example)
NS = **N**umber of **S**tations (NS = 4 this example) the net is configured to support
NAD = **N**et **A**ccess **D**elay, time after TP that a station must listen for a busy net before starting to transmit
Net **B**usy **D**etect, time from when a station begins transmitting until it can be detected by other stations
A = **A**ny Station Number, used to indicate that any station may transmit during the bump slot to quickly set NP to urgent

EOT = **E**nd **O**f **T**ransmission, time at which stations perceive a transmission ending

FSN = **F**irst **S**tation **N**umber, station number having the first opportunity to transmit (FSN = 2 this example) at the current NP

Increasing NAD time per station number with each listen time slot equal to the Net Busy Detect time

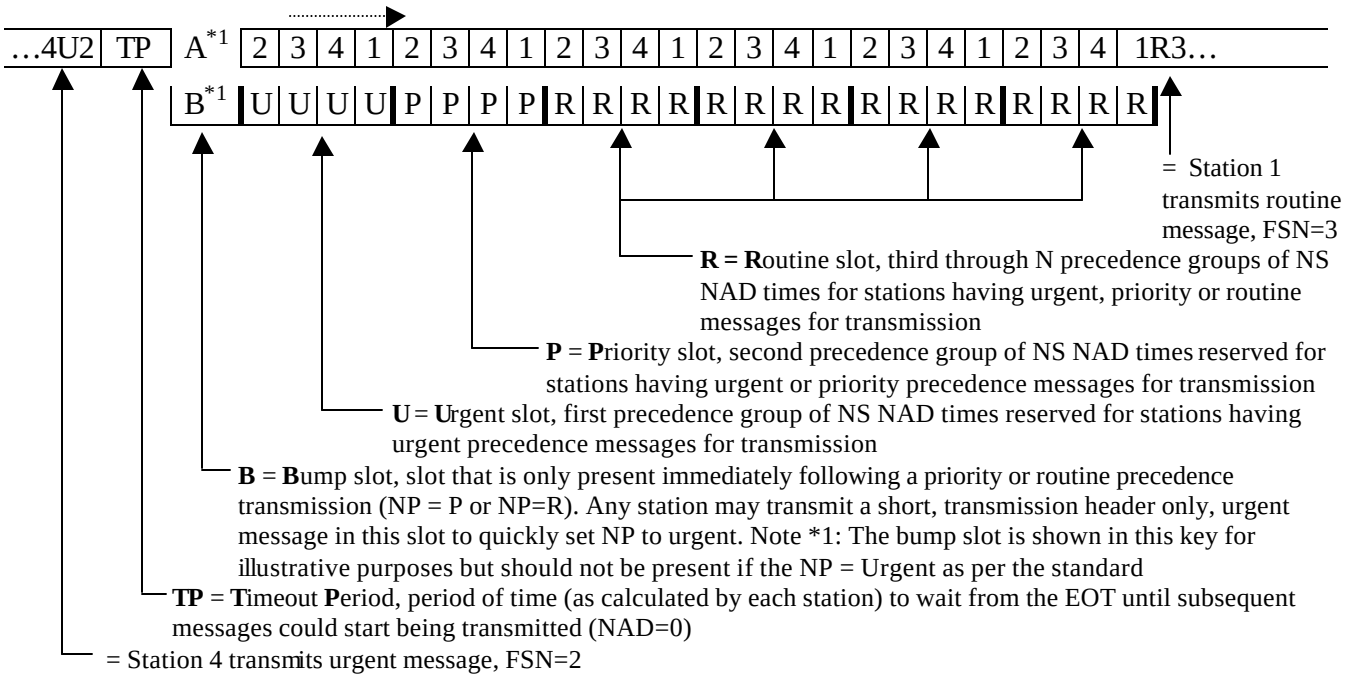

FIGURE 34. DAP-NAD example key.

Downloaded from http://www.everyspec.com

APPENDIX C

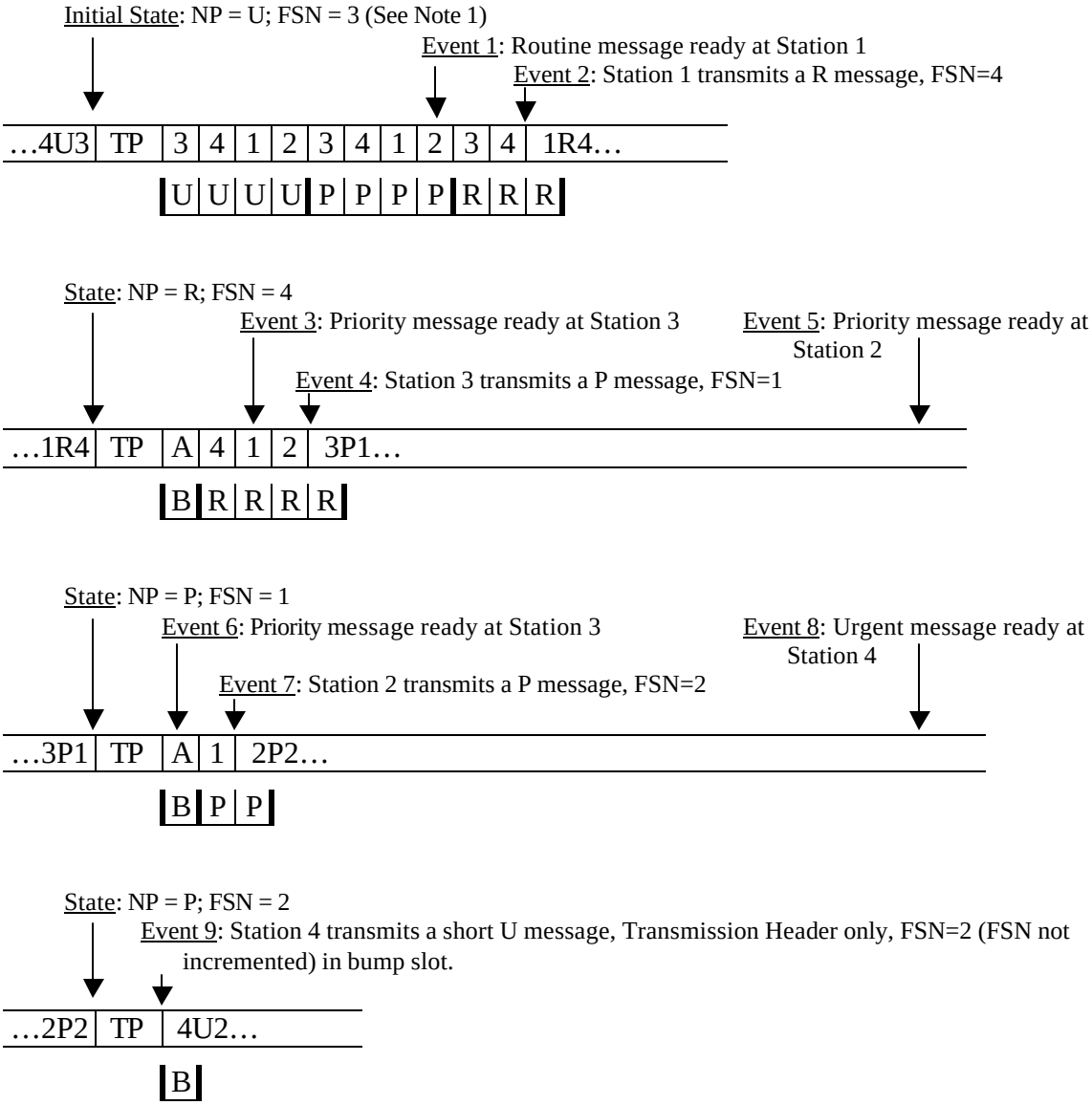

Note 1: Example assumes initially that station 4 has just finished transmitting a frame with an FSN=3 and NP=U, that no messages are pending transmission from any station at the end of this transmission, and that the net is configured for 4 stations

FIGURE 35. DAP-NAD example.

Downloaded from http://www.everyspec.com

APPENDIX C

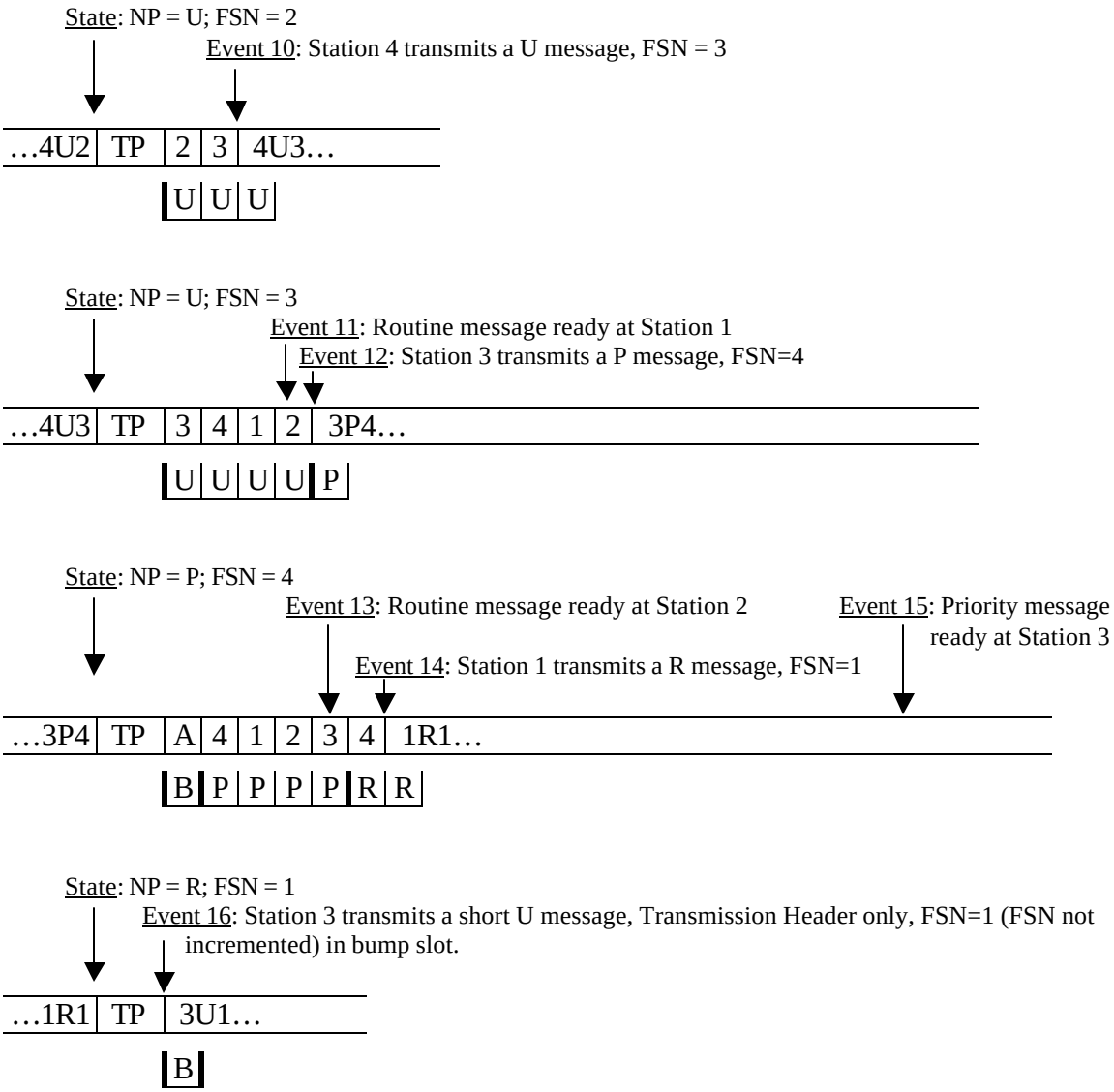

FIGURE 35. DAP-NAD example - Continued.

Downloaded from http://www.everyspec.com

APPENDIX C

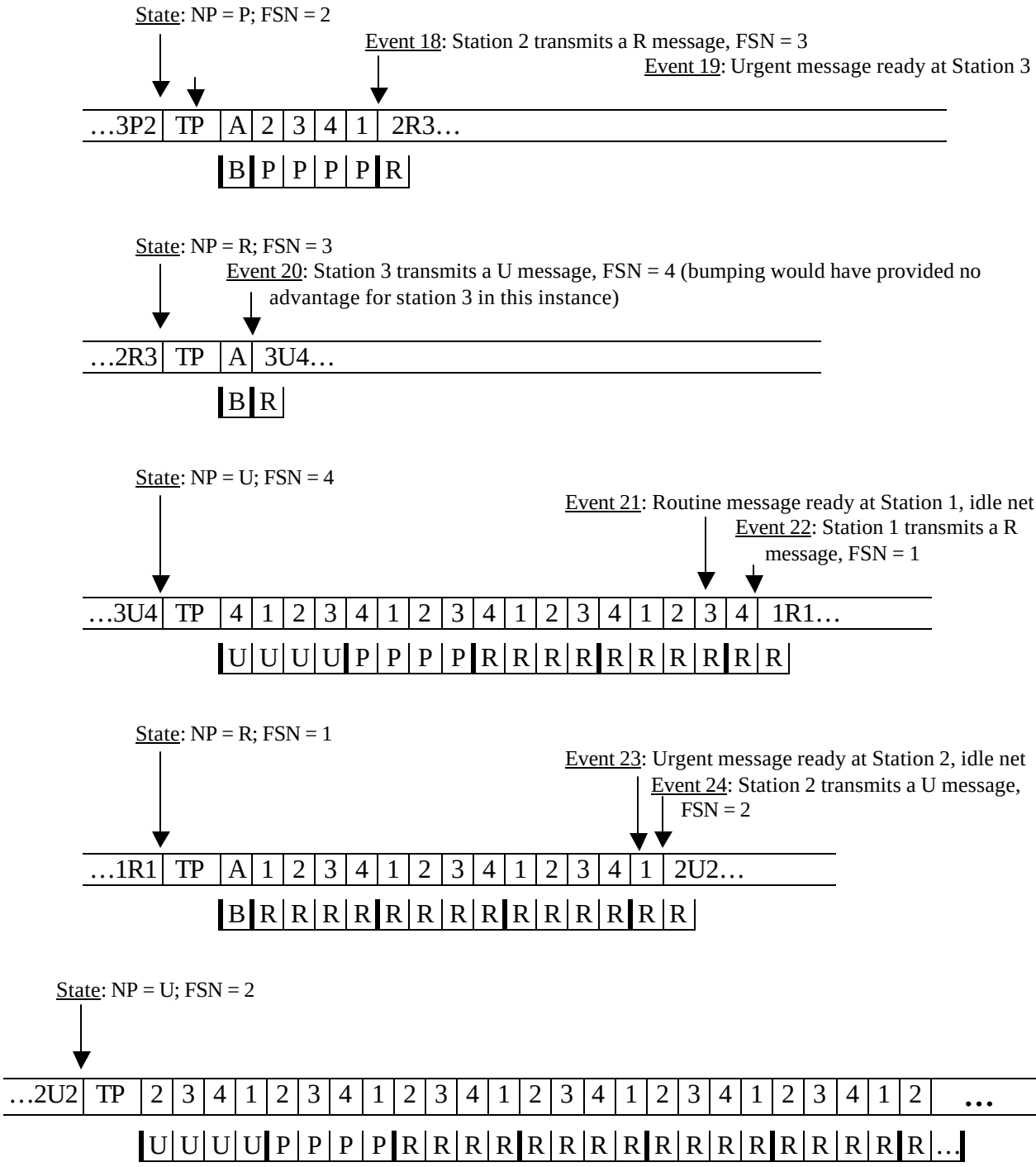

(Net goes idle for indefinite time period and NADs continue to be calculated by each station during the idle period in order to avoid collisions when a message of any precedence is ready for transmission at more than one station at the same time in the future.)

FIGURE 35. DAP-NAD example - Continued.

Downloaded from http://www.everyspec.com

C.4.4.5.1. DAP-NAD information field. To allow for rapid recovery (resynchronization) to the DAP-NAD mechanism when messages are not received correctly due to noise, etc., and to provide subscribers information about the priority of a message, a DAP-NAD Information Field has been added to the Transmission Header. This field defines the next access opportunity. This field is present in all physical frames. This field contains the First Subscriber Number subfield which contains the number of the subscriber that is to have the first network access opportunity at the next network access period (the one immediately following this transmission). The number of the subscriber that has the first network access opportunity is the variable FSN in the equations below. The DAP-NAD Information Field also contains the Data Link Precedence subfield which indicates the highest priority of any message that is contained in the physical frame. It shall contain the value 0 if an urgent message is in the frame, 1 if a priority but no urgent message is in the frame and 2 if neither an urgent or priority message is in the frame. The Type 1 acknowledgment sent in response to a transmission will use the same Data Link Precedence and First Subscriber Number as used in the original message to which the acknowledgment applies. The variable NP in the equations below shall be set equal to the content of this subfield for the next network access period. If the transmission contained multiple frames, the variable NP is set equal to the highest value in any of the frames. If network busy is detected in the reserved network access period, the network reverts to the Urgent mode regardless of the setting in the Data Link Precedence subfield.

C.4.4.5.2 DAP-NAD equations. A sequence of NADs for each network access period is generated. A subscriber may transmit a message(s) when the time following the Timeout Period equals any one of the terms (NAD values) in the sequence. Equation 1 is used by each subscriber to calculate its DAP-NADs.

Equation 1: $NAD_n = F_n * \text{Net\_Busy\_Detect\_Time} + \text{Max}(0, F_n-1) * \text{DTETURN}$
for n=1 to

NAD_n is the nth term in the sequence of NADs that are associated with a subscriber during a network access period. Each term (NAD_1, NAD_2, NAD_3, etc.) is a point in time (a delay following the Timeout Period) at which a subscriber may begin transmitting. If a subscriber does not begin transmitting at one term (e.g. NAD_2), it shall wait until at least the next term (e.g. NAD_3) before it can begin transmitting. For the DAP-NAD method, the values of the terms calculated by a subscriber will be different than the values of the terms that are calculated by all of the other subscribers (no two subscribers will have terms with the same values). Also, the values of the terms calculated by a subscriber for one network access period will be different than the values of the terms calculated by that subscriber for the next network access period. F_n is nth term in a sequence of factors that, when used in conjunction with DTETURN and Net_Busy_Detect_Time, yields the nth NAD term. F_n is an integer calculated per equation 2.

Downloaded from http://www.everyspec.com

APPENDIX C

Equation 2: $F_n = F_1 + (n-1)NS$ for n=1 to

F_n is the *n*th term in a sequence of factors. F_1 is the first term in the sequence and is the base from which all the other terms are calculated. It is calculated per equation 3. NS is the number of subscribers on the network and is the common difference between the terms of the sequence. The variable n is an integer and has a range of 1 to infinity.

Equation 3: $F_1 = F_{min} + I + P * NS$

F_1 is the first term in the sequence of factors. The first term that a subscriber can have is the minimum factor (F_{min}) plus the interrupt factor (I) plus an offset determined by priority of messages awaiting transmission. F_{min} is calculated using equation 4. P is the factor that accounts for message priority. It is calculated using equation 5. Interrupt factor I is computed using equation 6.

Equation 4: $F_{min} = SN - FSN$ if $SN \geq FSN$, else $F_{min} = NS + SN - FSN$

F_{min} is the minimum possible factor that a subscriber could have if message priority and network priority mode were ignored. SN is the number of the subscriber. It is an integer, has a range of 1 to NS, and is assigned at communications initialization. FSN is the number of the subscriber that has the first network access opportunity for the present network access period. It is set equal to the value received in the DAP-NAD information field of the Transmission Header of the last transmission on the net.

Equation 5: $P = MP - NP$ if $MP \geq NP$, else $P = 0$

P is the factor that accounts for priority of messages awaiting transmission. It is used to generate the offset to add to F_{min} to generate F_1. MP is a variable indicating the highest priority of any messages awaiting transmission. It shall have a value of 0 if there are any urgent messages awaiting transmission, the value 1 if there are any priority messages and no urgent messages awaiting transmission, and the value 2 if there are no urgent or priority messages awaiting transmission. NP is a variable indicating the highest priority of any messages contained in the last transmission on the network. It shall have the value 0 if an urgent message was in the last transmission, 1 if a priority but no urgent message was in the last transmission, and 2 if neither an urgent or priority message was in the last transmission.

Equation 6: $I = 0$ if NP is 0, else $I = 1$

I is a factor that provides a slot for stations to interrupt the network when the network is not already in Urgent mode.

Downloaded from http://www.everyspec.com

C.4.4.5.3 Initial condition state. The above DAP-NAD operations and equations only apply to subscribers after they are on-line and have received a message. A subscriber that has just come on line and has not yet received a message is not in synchronism with other subscribers (this subscriber has not yet started any timers and if it had, they would not have been started at the same time as other subscribers = timers). These subscribers shall be considered to be in the initial condition state. Regardless of what causes a subscriber to be in the initial condition state, transmissions shall be delayed by at least the time specified by equation 7 while in that state.

Equation 7: INAD = TP + ((3 * NS) + 1) * Net_Busy_Detect_Time + (3 * NS) * DTETURN

INAD (Initial condition state Network Access Delay) is the minimum time that a subscriber shall delay transmission of a message after it has become capable of receiving and transmitting messages, but no more than 20 seconds. The TP in the equation shall be a worst case TP, i.e., as if there had just been a Type 1 message on the network that required acknowledgment and was addressed to 16 subscribers on the net.

C.4.5. Voice/data network sharing. A station may support this protocol on a network where both voice and data transmissions are allowed to occur. When operating in a mixed voice and data network, voice and data network sharing shall operate in the following manner:

a. A receive operation shall be considered a voice reception unless a valid synchronization pattern is identified. A receive operation that is less than 0.75 seconds in length shall be considered a noise burst instead of a voice reception. See Section 6, Notes, (6.3.2.2.2) for additional information.

b. The network shall be synchronized based on RHD and TP timers, which are driven only by data transmissions and receptions. Voice receptions and noise bursts shall not be used for resynchronizing network timers.

c. A station shall not transmit during a noise burst or a voice reception. After completion of a voice reception, a station shall wait at least TURN milliseconds before initiating transmission. When voice/noise reception begins and ends during a Type 1 acknowledgment sequence, an acknowledging station will begin transmission only at the beginning of its individual RHD and will not begin transmission after the start of its RHD period.

d. After completion of a voice reception, operation of the P-NAD network access scheme shall be reinitiated if P-NAD is being used. P-NAD consists of a sequence of NAD slot groups. Within each NAD slot group there is one NAD slot assigned to each station and one slot assigned to the station that transmitted last. After a voice reception is completed, the current, partially-completed NAD slot group and the next complete NAD slot group shall be used only by stations with urgent-

Downloaded from http://www.everyspec.com

precedence data transmissions. The NAD slot group after these groups shall be used only by stations with urgent-precedence or priority-precedence data transmissions. Subsequent NAD slot groups may be used by any station. This preserves the intent of P-NAD, which is to deterministically avoid collisions and to ensure that high-precedence traffic is always transmitted first.

e. RHD and TP timers shall not be suspended or resumed as a result of voice receptions.

f. Data link protocol timers shall be suspended and resumed as a result of voice receptions.

g. The Intranet layer timers shall not be suspended and resumed as a result of voice receptions.

h. Relative priorities of voice and data on the network shall be adjusted by selectively enabling or disabling physical and/or data link concatenation for a station. Concatenation may be disabled to give priority to voice and may be enabled to give priority to data.

Downloaded from http://www.everyspec.com

APPENDIX D

COMMUNICATIONS SECURITY STANDARDS

D.1. General.

D.1.1 Scope. This appendix describes the COMSEC interoperability parameters for DMTD and interfacing C^4I systems. It defines the technical requirements for backward-compatible (traditional) and forward-compatible (embedded) interface modes.

D.1.2 Application. This appendix is a mandatory part of MIL-STD-188-220. The information contained herein is intended for compliance.

D.1.3 Interoperability. This appendix cannot guarantee the user end-to-end interoperability. The selection of COMSEC and signaling is a function of communications media. Traditional COMSEC equipment is specific to communications media and may not be compatible due to signaling differences. The systems integrators and systems planners shall ensure that compatible media and signaling are chosen if interoperability is desired. This COMSEC specification will provide for interoperability of the underlying encryption algorithm.

D.2. Applicable Documents.

a. (U) ON431125 WINDSTER Cryptographic Standards

b. (U) DS-68 INDICTOR Cryptographic Standards

D.3. Definitions. Refer to Appendix A.

D.4. General requirements. The backward-compatible mode applies when link encryption is provided by external COMSEC devices. These external COMSEC devices may be standalone equipment (such as the VINSON and KG-84) or communications equipment with built-in COMSEC. The forward-compatible mode shall apply for all DTE subsystems with embedded COMSEC. The backward-compatible mode may also be emulated using embedded COMSEC devices.

Downloaded from http://www.everyspec.com

APPENDIX D

D.5. Detailed requirements.

D.5.1 Traditional COMSEC transmission frame. The traditional COMSEC transmission frame shall be composed of the following components, as shown in Figure 36. Figure 36 provides additional detail to Figure 4a.

a. COMSEC Bit Synchronization

b. COMSEC Frame Synchronization

c. Message Indicator

d. Phasing

e. Transmission Synchronization (see 5.2.1.3).

f. Data Field (including Transmission Header)

g. COMSEC Postamble

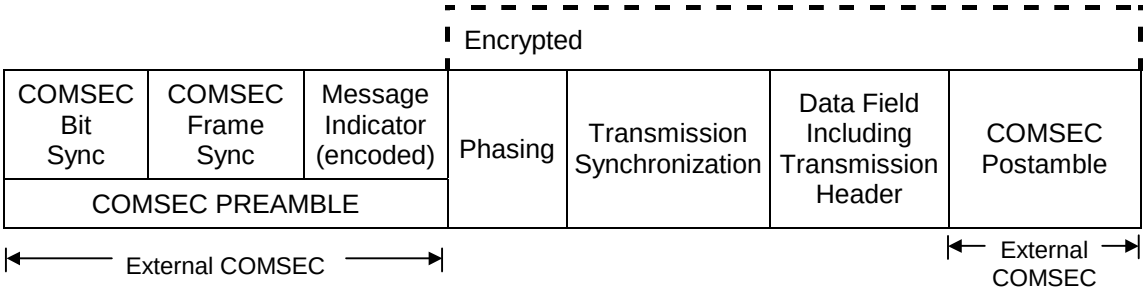

FIGURE 36. Traditional COMSEC transmission frame structure.

D.5.1.1 COMSEC preamble field. The COMSEC preamble field shall consist of three components: a COMSEC bit synchronization subfield, a COMSEC frame synchronization subfield, and a Message Indicator (MI) subfield. This field is used to achieve cryptographic synchronization over the link.

D.5.1.1.1 COMSEC bit synchronization subfield. This subfield shall be used to provide a signal for achieving bit synchronization and for indicating activity on a data link to the receiver. The duration of the COMSEC bit synchronization subfield shall be selectable from 65 milliseconds to

Downloaded from http://www.everyspec.com

1.5 seconds. The COMSEC bit synchronization subfield shall consist of the data-rate clock signal for the duration of the subfield.

D.5.1.1.2 COMSEC frame synchronization subfield. This subfield shall be used to provide a framing signal indicating the start of the encoded MI to the receiving station. This subfield shall be 465 bits long, consisting of 31 Phi-encoded bits, as shown in Figure 37a. The Phi patterns are a method of redundantly encoding data bits. A logical 1 data bit shall be encoded as shown in Figure 37b, and logical 0 data bit shall be encoded as shown in Figure 37c. A simple majority voting process may be performed at the receiver to decode the Phi-encoded frame pattern to its original format.

MSB	LSB
0111111111111111111111111111111	

FIGURE 37a. Phi encoding.

MSB	LSB
000100110101111	

FIGURE 37b. Phi encoding for logical 1 data bit.

MSB	LSB
111011001010000	

FIGURE 37c. Phi encoding for logical 0 data bit.

FIGURE 37. COMSEC frame synchronization pattern for Phi encoding.

D.5.1.1.3 Message Indicator subfield. This subfield shall contain the COMSEC-provided MI, a stream of random bits that are redundantly encoded using Phi patterns. Cryptographic synchronization is achieved when the receiver acquires the correct MI.

Downloaded from http://www.everyspec.com

D.5.1.2 Phasing. This field shall be a string of alternating ones and zeros, beginning with a one, sent by the DTE. The length of this field is between 0 and 10,000 milliseconds. Phasing is further described in C.3.2.2.

D.5.1.3 Transmission synchronization field. This field, consisting of the frame synchronization subfield, optional robust frame format subfield, and the TWC subfield, shall be as defined in 5.2.1.3.

D.5.1.4 Data field. This field, including Transmission Header as defined in 5.3.1, shall be as defined in 5.2.1.4.

D.5.1.5 COMSEC postamble field. This field shall be used to provide an end-of-transmission flag to the COMSEC at the receiving station. This will be automatically performed by the COMSEC key generator (KG). Refer to 0N431125, WINDSTER Cryptographic Standards, or DS-68, INDICTOR Cryptographic Standards, as appropriate.

D.5.1.6 COMSEC algorithm. The COMSEC algorithm shall be backward-compatible with VINSON equipment. Refer to 0N431125, WINDSTER Cryptographic Standards.

D.5.1.7 COMSEC modes of operation. The COMSEC shall be operated in Mode A. The rekey functions shall be performed through the use of KY-57 rekeys for backward compatibility. Refer to 0N431125, WINDSTER Cryptographic Standards.

D.5.2 Embedded COMSEC transmission frame. The embedded COMSEC transmission frame shall be composed of the following components, as shown in Figure 38:

a. Phasing

b. Frame synchronization

c. Optional Robust Frame Format

d. Message Indicator

e. Transmission word count

f. Data Field

g. COMSEC Postamble

Downloaded from http://www.everyspec.com

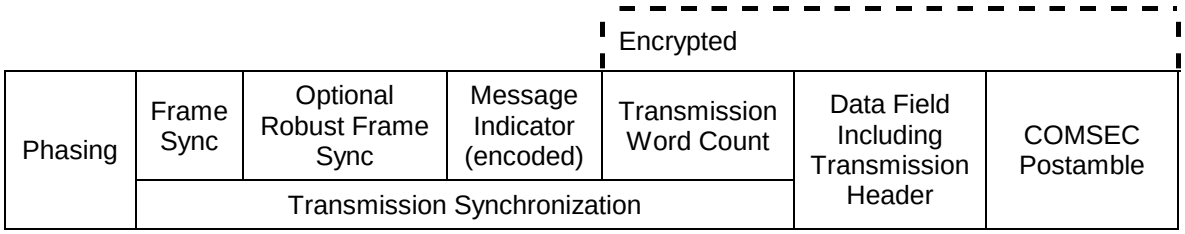

FIGURE 38. Embedded COMSEC transmission frame structure.

D.5.2.1 Phasing. This field shall be a string of alternating ones and zeros, beginning with a one, sent by the DTE. The length of this field is between 0 and 10,000 milliseconds. Phasing is further described in C.3.2.2.

D.5.2.2 Frame synchronization subfield. This subfield shall be either the Robust Frame Synchronization subfield defined in 5.2.1.3.1.2 or the Frame Synchronization subfield defined in 5.2.1.3.1.1. In either case frame synchronization is to be provided for both the message frame and the COMSEC.

D.5.2.3 Robust frame format subfield. When the Robust Frame Synchronization subfield is used, the Robust Frame Format subfield defined in 5.2.1.3.1.2 also shall be used. The Robust Frame Format subfield shall not be used when the Robust Frame Synchronization subfield is not used.

D.5.2.4 Message indicator field. This field shall contain the MI, a stream of random data that shall be encoded using Golay, as defined in 5.3.14.1 and 5.3.14.2. Cryptographic synchronization is achieved when the receiver acquires the correct MI. The COMSEC shall provide the MI bits. For backward compatibility, these MI bits shall be redundantly encoded using Phi patterns, as described in D.5.1.1.2.

D.5.2.5 Transmission word count subfield. This subfield shall be as defined in 5.2.1.3.1.4.

D.5.2.6 Data field. This field, including Transmission Header as defined in 5.3.1, shall be as defined in 5.2.1.4.

D.5.2.7 COMSEC postamble field. This field shall be used to provide an end-of-transmission flag to the COMSEC at the receiving station. The flag shall be a cryptographic function and may be used by the data terminal as an end-of-message flag as well.

D.5.2.8 COMSEC algorithm. Refer to 0N431125, WINDSTER Cryptographic Standards.

Downloaded from http://www.everyspec.com

D.5.2.9 COMSEC modes of operation. COMSEC shall be operated in Mode A for all applications. The rekey functions shall be performed through the use of KY-57 rekeys for backward-compatibility and shall be performed through over-the-air-rekeying (OTAR) techniques for forward compatibility. Rekey signaling for OTAR shall be supplied by the host equipment. Refer to 0N431125, WINDSTER Cryptographic Standards.

Downloaded from http://www.everyspec.com

APPENDIX E

CNR MANAGEMENT PROCESSES

E.1 General.

E.1.1 Scope. This appendix describes the management processes associated with the data link and network layer. Since the tactical network using CNR may not be fully connected and since it is critical that all stations are provided compatible operating parameters, an Exchange Network Parameters (XNP) message has been defined. XNP messages that are transmitted within Type 1 UI frames, can be relayed, allow disconnected stations to participate fully in the network, and can be used to change network parameters dynamically.

E.1.2 Application. This appendix is not a mandatory part of MIL-STD-188-220. The information contained herein is intended for guidance only. If you decide to use XNP, the information contained herein is intended for compliance.

E.2 Applicable Documents. None

E.3 Network configuration. The CNR management process defined herein covers the centralized network management operations. In a centralized managed network, a single network controller manages and controls all aspects of the network.

It is desirable that all stations be capable of performing the functions of network controller. The designation of network control station will be done by a network authority and only one station is designated the network controller at any one time. A configuration parameter or an operator command either at initialization or during normal operation times, may inform the station of its network control responsibility. Access parameters, for a joining station, may only be obtained from the one station designated as the network controller.

E.4 Exchange network parameters (XNP) message. XNP messages have been designed to provide CNR management capabilities. However, they are not required if the stations on the network have been configured with data link addresses and operating parameters.

E.4.1 XNP message structure. XNP messages are composed of a one-octet Version Number field (set to 0), an optional Forwarding Header followed by the actual XNP message and one or more data blocks as shown in Figure 39.

Downloaded from http://www.everyspec.com

APPENDIX E

Most Significant Octet<——————————————————>Least Significant Octet

Version Number	Forwarding Header (Optional)	XNP Message (Identification plus basic information fields)	One or More XNP Data Blocks

FIGURE 39. XNP message format.

Detailed formatting of the Forwarding Header, each XNP Message and each Data Block is described in the following paragraphs and tables. The Forwarding Header, each XNP Message and each Data Block consists of data fields. The data fields may be one or more octets in length and may be value coded or bit mapped. When the data field size exceeds one octet, octets are transmitted from the most significant octet (low number) to the least significant octet (high number). Bit mapping uses each bit individually in an on/off representation such that multiple values may be represented by each octet. Bit 0 always represents the least significant bit (2^0). Figure 40 depicts an example 4-octet data field.

	Most Significant Octet<——————————>Least Significant Octet			
Octet	**1**	**2**	**3**	**4**
Bit	7 0	7 0	7 0	7 0
Bit	31 24	23 16	15 8	7 0
	Most Significant Bit<——————————————————>Least Significant Bit			

FIGURE 40. Example 4-octet XNP data field.

Undefined bits shall be set to zero on transmission and ignored on receipt. Undefined values are invalid. The processing of XNP messages containing undefined/invalid values shall be:

a. Ignore any undefined bits in a bit map.

b. If the Version Number is invalid or unsupported, discard the XNP message.

c. If any field in the Forwarding Header is invalid, discard the XNP message.

d. If the Message Number field is invalid, discard the XNP message.

Downloaded from http://www.everyspec.com

e. If the Length field is invalid in any Message Block (i.e., the value indicates that there are more octets than actually exist in the XNP message), discard the rest of the XNP message and continue processing the XNP message.

f. If the Block Number field is invalid in any XNP message, discard the block and continue processing the XNP message.

g. If the Length field is invalid in any Data Block (i.e., the value indicates that there are more octets than actually exist in the XNP message), discard the rest of the XNP message but act on the preceding blocks if possible.

h. If any other field is invalid in any Data Block, discard the data block and continue processing the XNP message.

i. If any other field is invalid in an XNP message, discard the XNP message.

E.4.1.1 Forwarding header. A station joining a network might not have knowledge of the network topology and might be unable to contact all stations in the network being joined (e.g. stations might be behind obstacles or out of range). The Forwarding Header provides a means for a joining station to make use of an adjacent station which has access to the entire network via Intranet Relay.

Relay assistance is required for the joining process in a centralized network when the joiner is unable to directly communicate with the network controller, and when distribution of the Hello message is required. The joining station fills in this header to request relay assistance by an established station. The selected established station distributes these messages using appropriate Intranet Relaying techniques. Any and all responses go back to the selected established station who then forwards to the joiner. When an established member of a network receives an XNP message that contains a Forwarding Header with a Forwarder Link Address that matches its own data link address, the XNP message is retransmitted (via Intranet Relay) to the Destination Link Address in the Forwarding Header.

The Forwarding Header is shown in Table XVII. It consists of the Source Link Address which identifies the originator, the Forwarder Link Address which designates the data link address of the station requested by the joiner to forward the XNP messages, and the Destination Link Address which identifies the final destination. An “Unknown” Forwarder Link Address shall be represented by a value of 0 (zero).

Downloaded from http://www.everyspec.com

APPENDIX E

TABLE XVII. Forwarding header.

OCTET	FIELD IDENTIFICATION	VALUE
1	Message/Block Number: Identifies this as Forwarding Header.	0
2	Source Link Address: Identifies the originator of the XNP message.	1, 2, 4-95
3	Forwarder Link Address: Station selected to forward XNP messages from/to joining station.	0 (Unknown), 4-95
4	Destination Link Address: Identifies the intended recipient of the XNP.	1, 2, 4-95, 127

E.4.1.2 Message and data block structure. XNP messages and data blocks each have the structure shown in Table XVIII. Each message and data block starts with a one-octet identifier (message or block number) and a one-octet length field. These are followed by n data fields. Some data fields consist of multiple octets.

XNP messages are listed in Table XIX. Each of these messages may be combined with one or more of the XNP Data Blocks listed in Table XX, depending upon the level of detailed information required.

A Terminator Block (Table XXI) designates the end of the XNP message and all associated data blocks. The Terminator Block is required at the end of all XNP messages. Any blocks or messages appearing after the Terminator Block shall be ignored.

TABLE XVIII. Message and Block structure.

Octet Number	Field Identification
1	identifier octet (message or block number)
2	message or block length
3	data field 1
•	•
•	•
•	•
n+2	data field n

Downloaded from http://www.everyspec.com

APPENDIX E

TABLE XIX. XNP messages.

MESSAGE NUMBER	TITLE	DESCRIPTION
20	Join Request	Requests operating parameters assignment, validation, or both.
21	Join Accept	Accepts the Join Request. Provides update of parameters.
22	Join Reject	Rejects the Join Request with errors indicated.
23	Hello	Announces that a station is entering the network.
24	Goodbye	Announces that station is leaving the network.
25	Parameter Update Request	Requests update of network access and other operational parameters.
26	Parameter Update	Provides update of parameters.
27	Delay Time	Announces a known delay. Provides timer information.
28	Status Notification	Announces the identification number of the latest update message and identifies the NCS.

TABLE XX. XNP data blocks.

BLOCK NUMBER	TITLE	DESCRIPTION
1	Station Identification	Provides a network wide unique identifier for a joiner.
2	Basic Network Parameters	Provides a list of network parameters.
3	Media Access Configuration (MAC) Parameters	Provides a list of the MAC parameters associated with reported station.
4	Type 3 Parameters	Provides Type 3 parameters to allow computation of RHD_i and TP.
5	Deterministic NAD Parameters	Provides listing of DAP-NAD and P-NAD parameters to allow computation of access slots.
6	Probabilistic NAD Parameters	Provides listing of R-NAD and H-NAD parameters to allow computation of access slots.
7	RE-NAD Parameters	Provides listing of RE-NAD parameters.
8	Wait Time	Notifies recipient of the amount of time to wait before making required updates.
9	Type 2 Parameters	Provides a list of Type 2 capabilities.

Downloaded from http://www.everyspec.com

TABLE XX. XNP data blocks - Continued.

BLOCK NUMBER	TITLE	DESCRIPTION
10	Type 4 Parameters	Provides a list of Type 4 capabilities.
11	NAD Ranking	System ranking for use in deterministic NAD computations.
12	Intranet Parameters	List of parameters for maintaining intranet layer implementation.
13	Error	List of unacceptable parameters.
14	Address Designation Parameters	Listing of a station's Unique Identifier, Link Address and IP address.
15-254	Undefined	
255	Terminator Block	Notification of end of block transmissions.

TABLE XXI. Terminator block.

OCTET	FIELD IDENTIFICATION	VALUE
1	End of message designator: Identifies the end of the XNP message and associated data blocks.	255

E.4.2 XNP message formats. Seven messages are used in the procedure for a station to join a network or to request or verify the network operating parameters. These are the Join Request, Join Accept, Join Reject, Parameter Update Request, Parameter Update, Delay Time and Status Notification messages. The Hello message allows an initiating station to announce that it is entering the network. The Goodbye message is issued to report that a station is leaving the network. These messages may be combined with one or more data blocks to provide detailed network operating parameters. These messages are described in the following paragraphs and are depicted in Tables XXII through XXX.

E.4.2.1 Join request. The Join Request message (Table XXII) is sent by a station attempting to join a network. The joiner is expected to provide a unique identifier and indicate all implemented capabilities in order to lessen the probability of rejection by the network controller. The unique identifier is used to resolve ambiguities during the joining procedure. The unique identifier is the 24-bit Unit Reference Number (URN) with zeros in the eight most significant bits. If there is no URN a unique identifier shall be assigned to each potential user by a mechanism outside the scope of this appendix.

Downloaded from http://www.everyspec.com

TABLE XXII. Join request message.

OCTET	FIELD IDENTIFICATION	VALUE
1	Message Number: Identifies specific message content.	20
2	Message Length: Indicates the length of the Join Request Message block in octets	6
3-6	Station Identifier: Identifies the station trying to join the network	Unique identifier for the station

The joining station should include data block 2 and, if hardware parameters are known, data block 3. The joining station fills in the applicable data blocks with the parameters supported by the joiner.

Some fields within the Join Request data blocks allow the joiner to set all bits, indicating that all capabilities of that field are supported by the joining station, and the network controller is expected to provide the desired network operating parameters.

The Join Request message with no data blocks will suffice provided joiner has every capability listed in data block 2, has not been pre-assigned a data link address, is capable of all optional data link layer service types, and does not know hardware parameters.

E.4.2.2 Join accept. The Join Accept message (Table XXIII) is sent by a network controller in response to the Join Request message, provided entry to the network has been approved. Actual network operating parameters will be provided in the appropriate data blocks combined with the Join Accept message. The appropriate data blocks appended to the Join Accept message depend upon the network configuration and the capabilities of the joining station. It will typically include data blocks 2, 4, 9 (if joiner indicated a Type 2 capability and there exists a network default), 10 (if joiner indicated a Type 4 capability) and either block 5, 6, or 7 (depending upon network access method in use).

The Join Accept message may include data block 8 to specify a period that the joining station should wait after sending a Hello message before it can assume its selected data link address has been accepted.

Downloaded from http://www.everyspec.com

APPENDIX E

TABLE XXIII. Join accept message.

OCTET	FIELD IDENTIFICATION	VALUE
1	Message Number: Identifies specific message content.	21
2	Message Length: Indicates the length of the Join Accept Message block in octets.	8
3	Parameter Update Identifier: A number to uniquely identify the latest parameter values distributed for use in the network.	1 - 255 in increments of 1
4-7	Station Identifier: Identifies the station trying to join the network.	Unique identifier for the station
8	Link Address: Data link address assigned to joining station.	4 - 95 = data link address

E.4.2.3 Join reject. The Join Reject message (Table XXIV) is sent by a network controller when entry to the network has not been approved. The Join Reject should be interpreted as being applied to the station identified in the Station Identifier field. Join Reject messages originated by any station other than a network controller (e.g. improper network controller designation) should be discarded and ignored.

The Join Reject message is sent in response to the Join Request message when the reason for rejection is that the parameters provided are not presently acceptable in this network. An error indication is provided with the Join Reject to clearly identify the unacceptable parameter(s). This error indication may be data block 13, which lists the unacceptable parameters and/or one or more other data blocks correcting the unacceptable parameter(s).

The Join Reject message is also sent in response to a Hello message to indicate that the joiner has selected a data link address that is in use. Rejection of a joining station's use of a data link address can be accomplished with only the basic Join Reject information fields, no data blocks (except the Termination Block) are required. Unless the joining station can correct the error(s), entry via XNP is not possible.

When a station receives a Join Reject message, the station identified in the Station Identifier field shall be removed from its topology tables unless it is a static node (link quality is 7).

Downloaded from http://www.everyspec.com

TABLE XXIV. Join reject message.

OCTET	FIELD IDENTIFICATION	VALUE
1	Message Number: Identifies specific message content.	22
2	Message Length: Indicates the length of the Join Reject Message block in octets.	9
3	Parameter Update Identifier: A number to uniquely identify the latest parameter values distributed for use in the network.	1 - 255 in increments of 1
4-7	Station Identifier: Identifies the station trying to join the network.	Unique identifier for the station
8	Rejected Link Address. The data link address being rejected because it is already in use. Joining station shall select another address.	Rejected data link address. 0 = Rejection is for a reason other than data link address.
9	Link Address: Data link address assigned to joining station	4 - 95 = data link address

E.4.2.4 Hello message. The Hello message (Table XXV) is sent by a station after the network operating parameters are known and the station is ready to enter the network. The message contains the data link address of the station entering the network. Address tables within receiving stations are updated, if necessary, with the new address information. When a station receives a Hello message, it shall update its topology tables.

TABLE XXV. Hello message.

OCTET	FIELD IDENTIFICATION	VALUE
1	Message Number: Identifies specific message content.	23
2	Message Length: Indicates the length of the Hello Message block in octets.	7
3-6	Station Identifier: Identifies the station trying to join the network.	Unique identifier for the station.
7	Link Address: The actual data link address of this station.	Data link address of this station.

E.4.2.5 Goodbye message. The Goodbye message (Table XXVI) is sent by a station to notify the network controller and other network subscribers that it is leaving the network. The data link

Downloaded from http://www.everyspec.com

address used by the receiving station is made available for re-use by another station. Address tables within the receiving stations are updated, if necessary.

Before a station sends a Goodbye message, it should disconnect all Type 2 connections and broadcast a URNR and DRNR to indicate it will no longer receive frames. When a station receives a Goodbye message, it shall update its topology tables.

TABLE XXVI. Goodbye message.

OCTET	FIELD IDENTIFICATION	VALUE
1	Message Number: Identifies specific message content.	24
2	Message Length: Indicates the length of the Goodbye Message block in octets.	7
3-6	Station Identifier: Identifies the station leaving the network.	Unique identifier for this station.
7	Released Link Address: The data link address of the station leaving the network.	Data link address of this station.

E.4.2.6 Parameter update request message. A station that is out of operation for some period of time or experiences a system failure may be unaware of changes to the network operating procedures/parameters or may have lost all record of the operating parameters. Once the outage or failure is corrected, the station may send this Parameter Update Request message (Table XXVII) to obtain new/changed parameters. The station may use this message to obtain an update of any or all parameters by attaching data blocks identifying the parameters that need to be updated.

TABLE XXVII. Parameter update request message.

OCTET	FIELD IDENTIFICATION	VALUE
1	Message Number: Identifies specific message content.	25
2	Message Length: Indicates the length of the Parameter Update Request Message block in octets.	7
3-6	Station Identifier: Identifies this station.	Unique identifier for the station

Downloaded from http://www.everyspec.com

TABLE XXVII. Parameter update request message - Continued.

OCTET	FIELD IDENTIFICATION	VALUE
7	Update Requested: Update of parameters for requesting station or for all stations on the network. Actual parameters requested shall be stated in attached data blocks.	Bits set to one designate the following: 0 = Requesting Station 1 = All Stations 2 - 7 = Undefined

E.4.2.7 Parameter update message. The Parameter Update message (Table XXVIII) shall be sent in response to the Parameter Update Request message. It may be sent by the network controller before sending a Join Accept message in response to a Join Request message. The Parameter Update message may include data block 8 to specify the time period, after receipt of the message that the network parameters become effective.

TABLE XXVIII. Parameter update message.

OCTET	FIELD IDENTIFICATION	VALUE
1	Message Number: Identifies specific message content.	26
2	Message Length: Indicates the length of the Parameter Update Message block in octets.	8
3	Parameter Update Identifier: A number to uniquely identify the latest parameter values distributed for use in the network.	1 - 255 in increments of 1
4-7	Station Identifier: Identifies a station.	Unique identifier for the station
8	Link Address: Data link address assigned to identified station.	4 - 95 = data link address

E.4.2.8 Delay time message. The Delay Time message (Table XXIX) is sent by a Forwarder in response to a broadcast Join Request message. It provides an indication to the joiner of how long a delay should be expected before the Forwarder will return a Join Accept or Reject message from the network controller after a Forwarded Join Request message is received from the joining station.

Downloaded from http://www.everyspec.com

APPENDIX E

TABLE XXIX. Delay time message.

OCTET	FIELD IDENTIFICATION	VALUE
1	Message Number: Identifies specific message content.	27
2	Message Length: Indicates the length of the Delay Time Message block in octets.	7
3-6	Station Identifier: Identifies the station trying to join the network.	Unique identifier for the station
7	Time: The amount of time the joiner should expect to wait for a Join Accept message after sending a Join Request through this Forwarder.	1 to 255 seconds in 1 second increments

E.4.2.9 Status notification message. The status notification message (Table XXX) is sent by the network controller on a one time basis (as required) or periodically. It provides all stations with the identification of the latest update of parameter values and identifies the network controller and backup. A receiving station that is using a different set of parameter values (different parameter update identifier) shall notify the network controller and request the latest update. Update shall be accomplished using the Parameter Update message. The parameter update message shall utilize reliable link layer transmission services Type 1 ACK.

TABLE XXX. Status notification message.

OCTET	FIELD IDENTIFICATION	VALUE
1	Message Number: Identifies specific message content.	28
2	Message Length: Indicates the length of the Status Notification Message block in octets.	16
3	Parameter Update Identifier: A number to uniquely identify the latest parameter values distributed for use in the network.	1 - 255 in increments of 1
4-7	NCS ID: Identification of the station performing NCS duties.	Unique identifier for the station
8-11	Backup NCS ID: Identification of the station designated as the backup NCS.	Unique identifier for the backup station
12-15	Secondary Backup NCS ID: Identification of the station designated as the secondary backup.	Unique identifier for the secondary backup station

Downloaded from http://www.everyspec.com

TABLE XXX. Status notification message - Continued.

OCTET	FIELD IDENTIFICATION	VALUE
16	Timing: Indicates how often this message is being sent. Value represents the frequency of transmission in 15 minute increments.	0 = one time 1 - 255 = number of 15 minute increments between transmissions

E.4.3 XNP data block formats. One or more additional XNP Data Blocks may appear before the Terminator Block in each XNP message to either provide specific network operating parameters or to request specific parameters. The additional XNP Data Blocks are described in the following paragraphs and are depicted in Tables XXXI through XLIV.

E.4.3.1 Block 1, Station identification. Block 1 (Table XXXI) consists of one field which is used to identify the station being reported. It is used with the Parameter Update message to identify the station to which the parameters apply, in Block 2, and/or Block 11 (that shall be preceded by Block 1).

TABLE XXXI. Station ID.

OCTET	FIELD IDENTIFICATION	VALUE
1	Block Number: Identifies specific data block.	1
2	Length: Indicates the length of the Station ID block in octets.	6
3-6	Unique Identifier: Identifies the station trying to join the network or being updated.	Unique identifier for the station

E.4.3.2 Block 2, Basic network parameters. This block (Table XXXII) is used to define basic network capabilities of a joining station, a requesting station or any other station identified by Block 1. It is mandatory in the Join Request message to identify capabilities of the joining station, unless the joining station has all possible capabilities listed. It is optional with the Join Accept message, Hello message, Parameter Update Request message and Parameter Update message.

Downloaded from http://www.everyspec.com

APPENDIX E

TABLE XXXII. Basic network parameters.

OCTET	FIELD IDENTIFICATION	VALUE
1	Block Number: Identifies specific data block.	2
2	Length: Indicates the length of the Basic Network Parameters block in octets.	16
3	Individual/Network Capability: Indicates whether the parameter values provided in this block are those of an individual station or the specific values being used in the network.	0 = Individual station 1 = Network values
4	Link Address: Identifies the data link address of the station.	4 - 95 = data link address
5	Station Class: The types of data link services available (See 5.3.3.5).	0 = Class A 1 = Class B 2 = Class C 3 = Class D
6	NAD Methods: Identifies either the NAD methods available by a station or the specific NAD method being used in a network. Multiple bits may be set when defining the NAD methods available by a station.	Bit map: 0 = R-NAD 1 = H-NAD 2 = P-NAD 3 = DAP-NAD 4 = RE-NAD
7-10	Group Address: Bit map that identifies the group address(es) that are in use in the network or that the station is a member of.	Bit map: LSB = 96 MSB-2 = 125
11	Concatenation Capability: Indicates the types of concatenation supported by the network or the reporting station.	Bit map: 0 = No concatenation allowed 1 = Physical layer 2 = Data link layer
12	FEC/TDC/Scrambling Mode: Bit map which identifies the FEC, TDC and Scrambling capabilities.	Bit Map: 0 = Half-rate Golay FEC 1 = TDC 2 = V.33 Scrambling 3 = V.36 Scrambling
13-14	Max. UI, DIA and I Info. Octets: Indicates the largest information field size that can be handled by the reporting station or that is allowed on the network.	708 – 3345 octets 65535 = requested

Downloaded from http://www.everyspec.com

APPENDIX E

TABLE XXXII. Basic network parameters - Continued.

OCTET	FIELD IDENTIFICATION	VALUE
15-16	Maximum Transmit Time (MTT): The maximum time allowed on a net for a single transmission in tenths of a second. Used only to limit physical and link concatenation.	1-2540 = tenths of a second

E.4.3.3 Block 3, MAC parameters. MAC parameters defined by Block 3 (Table XXXIII) are required to enable computation of TP, RHD and Net_Busy_Detect_Time described in Appendix C. Although not mandatory with any message, it could lead to erroneous network control computations resulting in collisions if the information is not provided in a Join Request message.

TABLE XXXIII. MAC parameters.

OCTET	FIELD IDENTIFICATION	VALUE
1	Block Number: Identifies specific data block	3
2	Length: Indicates the length of the Hardware Parameters block in octets	22
3-4	Equipment Preamble Time (EPRE): Network Access Control parameter defined in Appendix C.	0 – 30000 msec in 1 msec increments
5-6	Phasing Time: Network Access Control parameter defined in Appendix C.	0 – 10000 msec in 1 msec increments
7-8	Equipment Lag Time (ELAG): Network Access Control parameter defined in Appendix C.	0 – 65534 msec in 1 msec increments
9-10	Turnaround Time (TURN): Network Access Control parameter defined in Appendix C.	0 – 65534 msec in 1 msec increments
11-12	Tolerance Time (TOL): Network Access Control parameter defined in Appendix C.	0 – 2500 msec in 1 msec increments
13-14	DTE Processing Time (DTEPROC): Network Access Control parameter defined in Appendix C.	0 – 65534 msec in 1 msec increments
15	DTE Acknowledgment Time (DTEACK): Network Access Control parameter defined in Appendix C.	0 – 254 msec in 1 msec increments
16-17	Net Busy Sensing Time, B: The parameter “B” (data sensing busy detect) used to calculate Net Busy Detect Time (NBDT) defined in Appendix C.	0 – 65534 msec in 1 msec increments

Downloaded from http://www.everyspec.com

TABLE XXXIII. MAC parameters - Continued.

OCTET	FIELD IDENTIFICATION	VALUE
18-19	Net Busy Detect Time (Squelch Detect): The time to detect network busy using the squelch detection function of SINCGARS.	0 - 65534 msec in 1 msec increments
20-21	Net Busy Detect Time (Non-Squelch Detect): The time to detect data network busy using received data rather than squelch detect.	0 - 65534 msec in 1 msec increments
22	Mode Of Operation: Identifies the Physical Layer protocol capabilities of a specific station or those being used in the network. Multiple bits may be set.	Bit Map: 0 = System Capabilities 1 = Network Operations 2 = Synchronous Mode (SDM) 3 = Synchronous Mode (EDM) 4 = Asynchronous Mode 5 = Packet Mode 6 = Robust Comm. Protocol

E.4.3.4 Block 4, Type 3 parameters. These parameters (Table XXXIV) are required for data link Type 3 (acknowledged Type 1) operations and are mandatory with the Join Accept message to provide the joining station with sufficient information to use Type 3 in the network. This block is optional with the Parameter Update Request message and the Parameter Update message.

TABLE XXXIV. Type 3 parameters.

OCTET	FIELD IDENTIFICATION	VALUE
1	Block Number: Identifies specific data block.	4
2	Length: Indicates the length of the Type 3 Parameters block in octets	5
3	Type 3 Retransmissions: The maximum number of times to retransmit an unacknowledged frame.	0 to 5
4-5	Busy State Timer: The time interval following receipt of the URNR command PDU during which the station shall wait for the other station to clear the busy condition.	60 - 600 seconds in 1 second increments

Downloaded from http://www.everyspec.com

E.4.3.5 Block 5, Deterministic NAD parameters. This block (Table XXXV) defines parameters needed to allow operation in a network configured for deterministic network access (DAP-NAD or P-NAD) operations. It is mandatory with the Join Accept message if the network being joined is operating with P-NAD or DAP-NAD. It may also be used with the Parameter Update Request message and the Parameter Update message. This block is required in the Parameter Update message if it is being used to announce the network's access procedures are changing to either P-NAD or DAP-NAD.

TABLE XXXV. Deterministic NAD parameters.

OCTET	FIELD IDENTIFICATION	VALUE
1	Block Number: Identifies specific data block	5
2	Length: Indicates the length of the Deterministic NAD Parameters block in octets	7
3	Number Of Stations: Indicates the number of stations participating on the network. Used in NAD calculations.	2 - 95
4	Number Of NAD Priorities: Number of priorities to be considered in P-NAD and DAP-NAD method.	1 - 8
5	Number Of NAD Slots: Indicates the number of NAD slots available for P-NAD and DAP-NAD operations.	1 - 127
6-7	NAD Slot Duration: Duration of the NAD time slot for NAD operations.	0 - 30000 msec in 1 msec increments

E.4.3.6 Block 6, Probabilistic NAD parameters. Block 6 (Table XXXVI) provides network access delay operating parameters for probabilistic networks (R-NAD or H-NAD). It is mandatory with the Join Accept message to provide the joining station with required operating parameters if the network is configured for either R-NAD or H-NAD. It is optional with the Parameter Update Request message and the Parameter Update message. This block is required in the Parameter Update message if it is being used to announce the network's access procedures are changing to either R-NAD or H-NAD.

Downloaded from http://www.everyspec.com

APPENDIX E

TABLE XXXVI. Probabilistic NAD parameters.

OCTET	FIELD IDENTIFICATION	VALUE
1	Block Number: Identifies specific data block	6
2	Length: Indicates the length of the Probabilistic NAD Parameters block in octets	7
3	Number Of Stations: Indicates the number of stations participating on the network. Used in NAD calculations.	2 - 95 stations on the network
4	Number Of NAD Priorities: Number of priorities to be considered in R-NAD and H-NAD method.	1 - 8
5	Urgent Percent: The percentage of urgent (%U) frames expected in an average 24-hour period. Used in the H-NAD calculation.	0 - 100% This value plus Priority Percent value shall be less than or equal to 100%
6	Priority Percent: The percentage of priority (%P) frames expected in an average 24-hour period. Used in the H-NAD calculation.	0 - 100% This value plus Urgent Percent value shall be less than or equal to 100%
7	Traffic Load: The amount of network traffic expected. Used in the H-NAD calculation.	0 = Normal 1 = Heavy 2 = Light

E.4.3.7 Block 7, RE-NAD parameters. These parameters (Table XXXVII) are required for stations in a network operating with RE-NAD. It is mandatory with the Join Accept message to provide joining stations with network access parameters if the network being joined is configured for RE-NAD. It is optional with the Parameter Update Request message and the Parameter Update message. This block is required in the Parameter Update message if it is being used to announce the network's access procedures are changing to RE-NAD.

TABLE XXXVII. RE-NAD parameters.

OCTET	FIELD IDENTIFICATION	VALUE
1	Block Number: Identifies specific data block.	7
2	Length: Indicates the length of the RE-NAD Parameters block in octets	14
3-4	Maximum Voice Factor: Upper bound on voice factor	300 – 10000 msec in 1 msec increments

Downloaded from http://www.everyspec.com

TABLE XXXVII. RE-NAD parameters - Continued.

OCTET	FIELD IDENTIFICATION	VALUE
5-6	Minimum Voice Factor: Lower bound on voice factor	300 – 10000 msec in 1 msec increments
7-8	Voice Factor Increment: Scheduler fast attack increment	0 – 10000 msec in 1 msec increments
9-10	Voice Factor Decrement: Scheduler slow decay increment	0 – 10000 msec in 1 msec increments
11-12	Maximum Scheduler Interval: Upper bound on scheduler interval	1000 – 5000 msec in 1 msec increments
13-14	Minimum Scheduler Interval: Lower bound on scheduler interval	1000 – 3000 msec in 1 msec increments

E.4.3.8 Block 8, Wait time. This block (Table XXXVIII) is used with the Join Accept message and Parameter Update message to specify a delay. When used with the Join Accept message, it indicates how long the Joining station should wait after sending a Hello message before it can assume its entry to the network is accepted. When used with the Parameter Update message, it indicates when new operating parameters become effective.

TABLE XXXVIII. Wait time.

OCTET	FIELD IDENTIFICATION	VALUE
1	Block Number: Identifies specific data block	8
2	Length: Indicates the length of the Wait Time block in octets	3
3	Wait Time: Delay period.	1 - 255 seconds in 1 second increments

E.4.3.9 Block 9, Type 2 parameters. This block (Table XXXIX) identifies individual or network operating parameters for stations capable of optional Type 2 operations. It may be used with the Join Accept message, Parameter Update Request message and Parameter Update message.

E.4.3.10 Block 10, Type 4 parameters. Type 4 parameters (Table XL) are required for stations in a network which are capable of Type 4 operations. It may be used with the Join Accept message, Parameter Update Request message and Parameter Update message.

Downloaded from http://www.everyspec.com

E.4.3.11 Block 11, NAD ranking. This block (Table XLI) provides ranking of a station in a deterministic network access configured network. It is mandatory if the network is configured for either P-NAD or DAP-NAD. It may be used with the Join Accept message or the Parameter Update message. In the Parameter Update message, it may be repeated to identify ranking of each station in the network. In this case, this block will appear once for each station on the network and will be preceded by block 1 to identify the station to which the ranking applies.

E.4.3.12 Block 12, Intranet parameters. The Intranet parameters (Table XLII) shall be provided to joining stations to provide information for Intranet relaying within the local network. This block shall be included with the Join Accept and Parameter Update messages.

E.4.3.13 Block 13, Error. Block 13 (Table XLIII) is encoded in Block/Byte number pairs indicating the starting byte number of the field containing the error. Block 13 may be included with the Join Reject message to indicate the reasons that a Join Request is being rejected.

E.4.3.14 Block 14, Address designation parameters. Block 14 (Table XLIV) provides for the exchange of addressing information between the NCS and the other stations participating in the network. This message may be used as a request by a station or by the NCS to notify any station of their link or IP address in the network. This block may also be utilized by the NCS to provide a block of link or IP addresses to a backup NCS.

TABLE XXXIX. Type 2 parameters.

OCTET	FIELD IDENTIFICATION	VALUE
1	Block Number: Identifies specific data block.	9
2	Length: Indicates the length of the Type 2 Parameters block in octets	12
3-4	ACK Timer: The amount of time before Waiting Acknowledgment procedures are initiated.	10 - 1800 seconds in 1 second increments
5	P-Bit Timer: The amount of time before Waiting Acknowledgment procedures are initiated when P-bit was set to 1.	10 - 60 seconds in 1 second increments
6-7	Reject Timer: The amount of time before re-sending the REJ or SREJ if no response is received.	20 - 3600 seconds in 1 second increments

Downloaded from http://www.everyspec.com

TABLE XXXIX. Type 2 parameters – Continued.

OCTET	FIELD IDENTIFICATION	VALUE
8	Maximum number of retransmissions, N2: The maximum number of times an I frame may be re-transmitted.	0 - 5
9	K Window: The maximum number of outstanding I PDUs allowed on a connection.	1 - 127
10	K2 Threshold: The maximum number of unacknowledged I PDUs on a connection before an acknowledgment is requested.	1 - 127
11	K3 Threshold: The maximum number of unacknowledged I PDUs on a connection before an acknowledgment shall be sent.	1 - 127
12	Response Delay Timer percent: The amount of time, as a percent of the ACK Timer, that a station waits after an I PDU with its P-bit set to 0 is received before sending an acknowledgment.	0 – 99% = Delay in 1% increments

TABLE XL. Type 4 parameters.

OCTET	FIELD IDENTIFICATION	VALUE
1	Block Number: Identifies specific data block	10
2	Length: Indicates the length of the Type 4 Parameters block in octets	7
3-4	ACK Timer: The amount of time before a DIA is retransmitted.	50 - 1200 tenths of seconds
5	K Window: The maximum number of outstanding DIA frames allowed for a station.	5 - 20
6	Maximum number of retransmissions attempts: The maximum number of times a DIA frame may be re-transmitted.	0 - 5
7	Type 4 ACK List Length: The number of DIA frames remembered in the list used to detect and discard duplicates.	0 = No duplicate detection 1 – 255 = Number or frames remembered

Downloaded from http://www.everyspec.com

APPENDIX E

TABLE XLI. NAD ranking.

OCTET	FIELD IDENTIFICATION	VALUE
1	Block Number: Identifies specific data block	11
2	Length: Indicates the length of the NAD Ranking Parameters block in octets	3
3	Subscriber Rank: Identifies the ranking of this station relative to other stations on the network. Used in P-NAD and DAP-NAD calculations to determine the actual order of network access.	1 - 127 with 1 being highest

TABLE XLII. Intranet parameters.

OCTET	FIELD IDENTIFICATION	VALUE
1	Block Number: Identifies specific data block	12
2	Length: Indicates the length of the Intranet Parameters block in octets	11
3	Min Update Per: Topology updates should not be transmitted more often than once every Min_Update_Per.	0 = No Updates 1 - 255 = minutes in 1 minute increments
4	Topology Update Precedence: The precedence of Topology Update messages.	0 = Routine 1 = Priority 2 = Immediate 3 = Flash 4 = Flash Override 5 = CRITIC/ECP 6 = Internet Control 7 = Network Control 8 - 255 = Undefined
5	Relayer Status: Indicates if the station is a relayer or non-relayer.	0 = No Relay 1 = Relay
6-7	ACK Timer (fixed factor): The base time to wait before retransmitting an unacknowledged Intranet message.	0 - 600 in seconds
8-9	ACK Timer (proportional factor): The amount of time to add to the fixed factor for each hop to the furthest destination of an Intranet message.	0 - 600 in seconds

Downloaded from http://www.everyspec.com

APPENDIX E

TABLE XLII. Intranet parameters - Continued.

OCTET	FIELD IDENTIFICATION	VALUE
10	Retransmit Count: The maximum number of retransmissions of an Intranet message.	1 - 4
11	Link Failure Threshold: The number of data link acknowledgment failures required to change a station's status to failed.	1 - 7

TABLE XLIII. Error.

OCTET	FIELD IDENTIFICATION	VALUE
1	Block Number: Identifies specific data block	13
2	Length: Indicates the length of the Error block in octets	2 + 2n, where n = the number of errors
3	Message/Block Number 1: Indicates the message or block containing the first error.	1 through 12, 20 through 27
4	Byte Number 1: Indicates the first octet of the field within the message or block that contains the first error.	1 through 255
	• • •	
1 + 2n	Message/Block Number n: Indicates the message or block containing the nth error.	1 through 13, 20 through 27
2 + 2n	Byte Number n: Indicates the first octet of the field within the message or block that contains the nth error.	1 through 255

TABLE XLIV. Address designation parameters.

OCTET	FIELD IDENTIFICATION	VALUE
1	Block Number: Identifies specific data block	14
2	Length: Indicates the length of the Address Designation Parameters block in octets	11
3-6	Unique Identifier: Identifies the station for which these parameters apply.	0 = unknown or not applicable
7-10	IP Address: The IP address for the identified stations.	0 = unknown or not applicable

Downloaded from http://www.everyspec.com

APPENDIX E

TABLE XLIV. Address designation parameters - Continued.

OCTET	FIELD IDENTIFICATION	VALUE
11	Link Address: Data link address for the identified station.	0 = unknown or not applicable 4 - 95 = data link address

E.5 XNP message exchange. XNP messages shall be exchanged using a UI command frame as shown in Figure 41.

FLAG	Source Address	Destination Address	Control Field	Intranet Header	XNP Information	FCS	FLAG

FIGURE 41. UI frame containing XNP message.

E.5.1 Data link addressing. Data link address 1 is a special address for a station to use while joining the network if it has not been pre-assigned a data link address. If a station has not been assigned a data link address, it shall use this special data link address for network entry until an individual data link address has been assigned or selected. Since multiple stations may be attempting to join the network at the same time, the Station Identifier field in each XNP message is used to uniquely identify the station.

Data link address 2 is a special address reserved for the network control station. Joining stations, forwarders and relayers use the special address 2 to address the network control station. The forwarder shall provide the full source directed relay path to the network controller at the Intranet layer. The network controller shall use this same path in reverse to reach the joining station through the forwarder. The Station Identifier field in the XNP messages used to uniquely identify stations during the joining process.

E.5.2 Poll/Final bit. Use of UI poll/final bits is allowed but not recommended for use with XNP Join Request, Join Accept and Join Reject messages because network timing parameters for Type 1 final-bit responses are either unknown or subject to change during the network joining process.

E.5.3 Network access. MIL-STD-188-220 allows a network to choose among the network access delay methods defined in Appendix C. Each station that operates on the network shall use the

Downloaded from http://www.everyspec.com

same method. If the station does not know this information before joining the network, the Join Request message allows a station to learn the network access method. In the case that the network access method is unknown, a random method (R-NAD or RE-NAD) shall be used for the Join Request message. When R-NAD is used, the default number of stations shall be 7 unless another number is known.

E.6 Network joining procedures. Joining procedures consist of providing operating parameters to the joining station by the designated network controller.

E.6.1 Joining concept. In general, the basic network joining procedure depicted in Figure 42 is followed. The joining station sends a Join Request message that contains its MIL-STD-188-220 capabilities and unique identifier. The responding network controller compares the joiner's capabilities with current network operating parameters. If an error is found which precludes acceptance into the network, the network controller returns a Join Reject message to the joiner. The Join Reject message may include all of the correct parameters in appropriate data blocks of the message and/or use the error message to identify errors. If the joiner can correct the errors, a new Join Request message with corrected parameters can be sent. If the errors are not correctable, automatic joining using XNP is not possible.

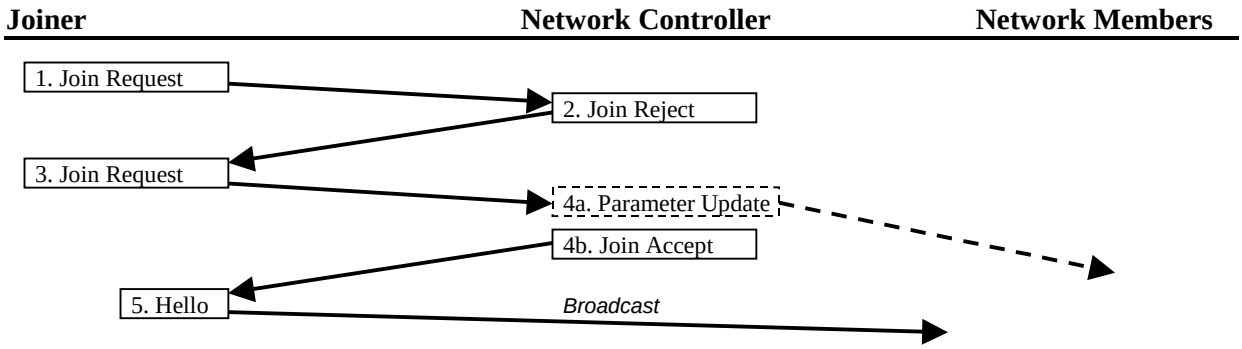

FIGURE 42. Joining concept.

If there are no errors in the parameters contained in the Join Request message, a Join Accept message is sent by the network controller after entering the parameters for any empty or updated parameter fields. The network controller may have to update the data fields filled in by the joiner since it is possible that the joining station has capabilities above and beyond those being used within the network. If adding the joiner to the network will cause a change to the network operating parameters (e.g., number of stations), the network controller may announce the new network parameters with the Parameter Update message.

Downloaded from http://www.everyspec.com

The Join Accept message contains an address bit map identifying data link addresses that can be selected by the joining station. When the joining station receives a Join Accept message response from the network controller, it shall select a data link address from the address bit map and broadcast a Hello message announcing entry to the network. Other members of the network shall update their topology tables upon receipt of the Hello message.

A network controller may send a Join Reject to remove any station from the network at any time. Since the Join Reject may be sent to prevent a joining station from selecting an already used address, the Join Reject message should be interpreted as being applied to the station identified in the Station Identifier field of the message. Other members of the network shall update their topology tables upon receipt of the Join Reject message.

When a station leaves a network, it shall send a Goodbye message to announce that the data link address is available for use by another station. Other members of the network shall update their topology tables upon receipt of the Goodbye message.

E.6.2 Procedures for joining a network with centralized network control. The procedure for joining a network with centralized network control is depicted in Figure 43. To simplify the discussion and the figure, Join Reject and Parameter Update messages discussed in the basic Joining Concept are not included.

Downloaded from http://www.everyspec.com

APPENDIX E

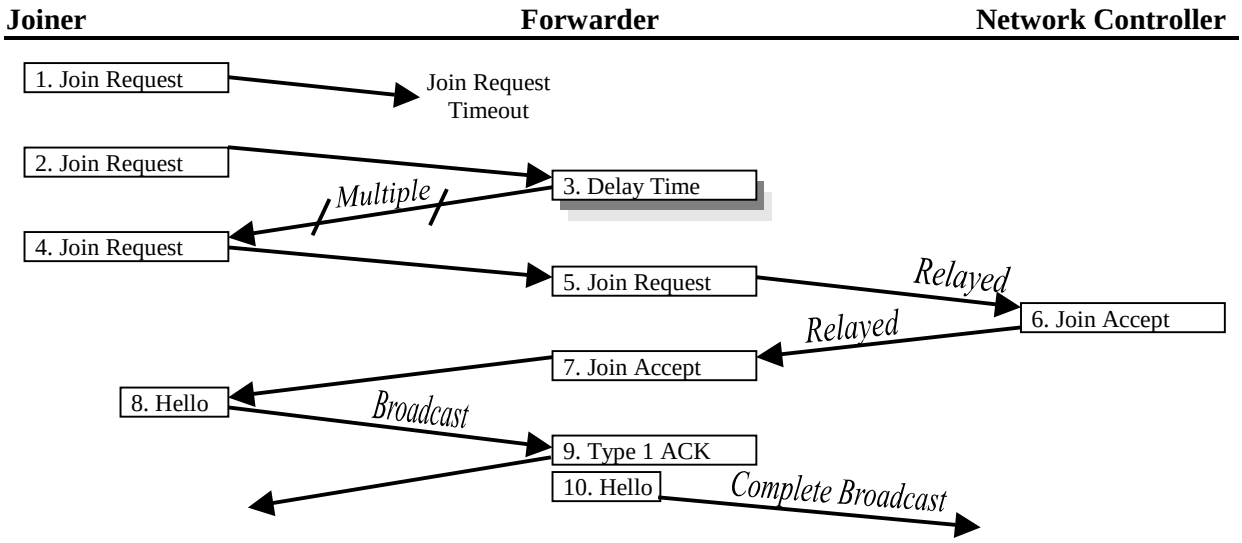

FIGURE 43. Joining a centralized network.

The joining station shall send a Join Request message to the network controller. The Join Request message shall be addressed to the network controller using the special data link address of 2 as the destination and the special data link address of 1 as the source in the UI frame. If the joining station is unable to contact the network controller because of distance or topology, there will be no response to the Join Request message. In this event, the joining station shall retransmit the Join Request message after the Join Request interval timer expires until the Maximum Number of Join Retries has been exceeded or until either a Join Reject or Join Accept message is received.

If the maximum number of Join Retries is exceeded, the joining station shall then address a UI frame containing the Join Request message to the Global address. The joining station shall continue sending the Join Request message to the Global address after the Join Request interval expires until a response is received from an existing network member.

All network members that receive the globally addressed Join Request message, and intend to participate in the joining procedure, shall send a Delay Time message with an XNP Forwarding Header in response to the joining station. The joining station shall select one of the responding stations as forwarder and resend the Join Request to the network controller using the forwarding parameters in the Forwarding Header received from the selected station. The selected forwarder shall relay this Join Request to the network controller and forward the network controller's response (Join Accept or Join Reject message) back to the joining station. The Join Accept message shall specify a list of unused data link addresses.

Downloaded from http://www.everyspec.com

The joining station shall expect the network controller response before expiration of the Delay Timer (the period of time specified in the selected forwarder's Delay Time message). If the Delay Timer expires, the joining station shall try each responder in turn in an attempt to contact the network controller.

When the joining station receives a Join Accept message response from the network controller, it shall prepare a Hello message announcing entry to the network. The Hello message shall use the joining station's assigned individual address (selected from the Join Accept's list of unused data link addresses) as the source address and shall include both the forwarder's individual address and the Global multicast address as destinations in the UI frame. The UI frame carrying this Hello message shall have the P-bit set.

The forwarder shall return a Type 1 acknowledgment to the joining station and then complete the broadcast of the Hello message to all network members. This complete broadcast involves relaying the Hello message, including Forwarding Header, using appropriate Intranet procedures (e.g., Source Directed Relay). The forwarder shall set the maximum hop count in the Intranet Header of the message to restrict the amount of relaying.

E.6.3 This paragraph was intentionally deleted.

E.6.4 Joining procedure examples.

E.6.4.1 Centralized network control, fully connected network. In this example, there is a single, centralized network controller and it is in direct line of sight to the joiner. The network is using data link Type 1 only and is using DAP-NAD. The joining station has all optional capabilities. Therefore the sequence of events is shown in Figure 44 and is described in section E.6.4.1.1. Detailed message formats are provided in section E.6.4.1.2.

Downloaded from http://www.everyspec.com

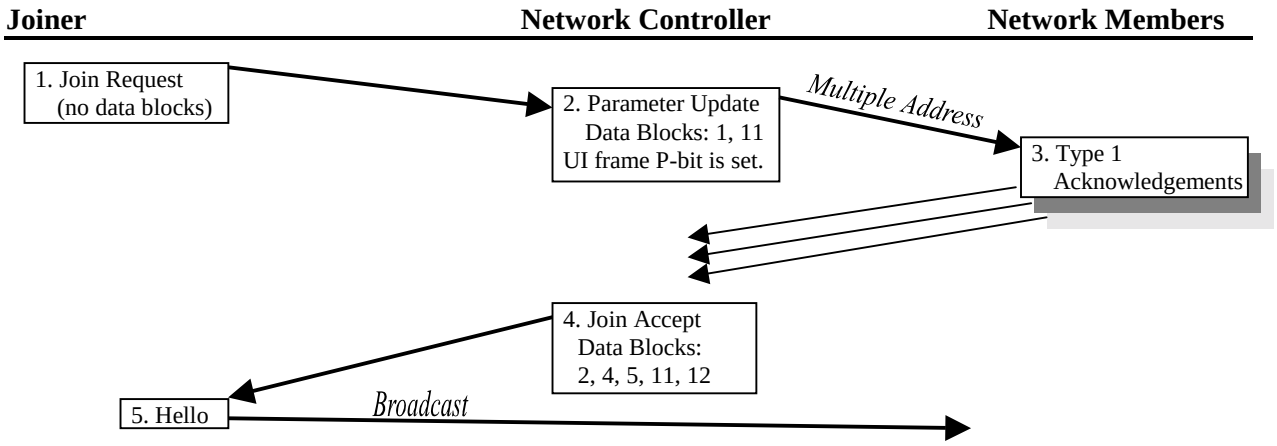

FIGURE 44. Joining a fully connected, centralized network.

E.6.4.1.1 Sequence of events.

1. The joining station sends a UI frame with a Join Request message to the network controller requesting entry to the network. No data blocks are appended since the joining station does not have knowledge of hardware parameters, but does have all optional capabilities.

2. The network controller computes the ranking for DAP-NAD and transmits a Parameter Update message to all network members. This Parameter Update message includes blocks 1 and 11 to designate the order of NAD access for all stations in the network. It is sent with the P-bit set to 1 to provide some level of assurance that it has been received and implemented by all participants.

3. Each network participant sends a Type 1 Acknowledgment of the UI frame carrying the Parameter Update message to the network controller.

4. The network controller responds with a Join Accept message to the joiner with a Link Address to specify the address assigned to the joining station. Data block 2, block 4, block 5, and block 12 are appended to the Join Accept message to provide the network operating parameters to the joining station. The Join Accept also contains Blocks 1 and 11 to provide the relative NAD rankings for each network member.

5. The joining station sends a Hello message to announce its entry into the network.

Downloaded from http://www.everyspec.com

E.6.4.1.2 Message formats.

1. Join Request Message

a. Transmission Header (see Appendix G Table LXVIII):

Selection Bits:		
FEC	1	(Yes)
TDC	1	(Yes)
Scrambling	0	(No)
Topology Update ID	0	(Initial)
Transmission Queue:		
T-bits	0	(No Info)
Trans. Queue Subfield	0	(Ignored)

b. Link Layer Header (see Appendix G Table LXV):

Source Address:		
C/R Bit	0	(Command)
Address	1	(Net Entry)
Destination Address:		
Extension Bit	1	(Last one.)
Address	2	(Network Controller)
Control Field	3	(UI, ACK not required)

c. Intranet Header (see Appendix G Table LXIV):

Version #	0	(Current Version)
Message Type	6	(XNP)
Header Length	3	(Minimum)
Type of Service	48	(Priority, low delay)

d. XNP Message:

Version #	0	(Current Version)
Message Number	20	(Join Request Message)
Message Length	6	(Join Request Message Length)
Station Identifier	1234	[in this example, Unit Reference Number was used]
Terminator Block	255	

Downloaded from http://www.everyspec.com

APPENDIX E

Table XLV illustrates the construction of the XNP Join Request Message. Station Identifier 1234 is used for illustration.

TABLE XLV. XNP join request message.

Field Name	Length (bits)	Value (Dec)	Value (Binary)	Field Fragments	Octet Value (Binary)	Octet Value (Hex)	Octet Number
			MSB LSB 2^n 2^0	MSB LSB 2^n 2^0	MSB LSB 2^n 2^0		
XNP Message							
Version Number	8	0	*0*0000000	*0*0000000	*0*0000000	0x00	0
Join Request Message							
Message Number	8	20	*0*0010100	*0*0010100	*0*0010100	0x14	1
Message Length	8	6	*0*0000110	*0*0000110	*0*0000110	0x06	2
Station Identifier	32	1234	*0*0000000 00000000 00000100 11010010	*0*0000000 00000000 00000100 11010010	*0*0000000 00000000 00000100 11010010	0x00 0x00 0x04 0xD2	3 4 5 6
Terminator block	8	255	*1*1111111	*1*1111111	*1*1111111	0xFF	7

2. Parameter Update Message

a. Transmission Header (see Appendix G Table LXVIII):

Selection Bits:

FEC	1	(Yes)
TDC	1	(Yes)
Scrambling	0	(No)
Topology Update ID	0	(Initial)

Transmission Queue:

T-bits	1	(DAP-NAD)
Data Link Precedence	0	(Urgent)
First Subscriber Number	zz	

Downloaded from http://www.everyspec.com

b. Link Layer Header (see Appendix G Table LXV):

Source Address:		
C/R Bit	0	(Command)
Address	2	(Network Controller)
Destination Address(es)	[up to 16 data link addresses]	
Control Field	19	(UI, ACK required)

c. Intranet Header (see Appendix G Table LXIV):

Version #	0	(Current Version)
Message Type	6	(XNP)
Header Length	3	(Minimum)
Type of Service	240	(Network Control, low delay)

d. XNP Message:

Version #	0	(Current Version)
Message Number	26	(Parameter Update Message)
Message Length	8	(Parameter Update Message Length)
Parameter Update Identifier	1	(ID is 1 for this example)
Station Identifier	1234	[in the least significant 24-bits, Unit Reference Number of joiner]
Link Address	12	(Joiner's assigned link address)

XNP Data Blocks

Data Block 1	Station Identification (Station #1)
Data Block 11	NAD Ranking (Station #1)
•	
•	
•	
Data Block 1	Station Ident. (Last station)
Data Block 11	NAD Ranking (Last station)
Terminator Block	255

Table XLVI illustrates the construction of the XNP Parameter Update Message with data blocks. Four stations are used for this illustration. The Parameter Update Identifier is 1 for this example:

Station #1:
- Station Identifier: 1225
- Ranking: 1

Station #2:
- Station Identifier: 1231
- Ranking: 2

Downloaded from http://www.everyspec.com

APPENDIX E

Station #3:
Station Identifier: 1244
Ranking: 4
Station #4:
Station Identifier: 1234 (new joiner)
Ranking: 3

TABLE XLVI. XNP parameter update message with data blocks.

Field Name	Length (bits)	Value (Dec)	Value (Binary)	Field Fragments	Octet Value (Binary)	Octet Value (Hex)	Octet Number
			MSB LSB 2^n 2^0	MSB LSB 2^n 2^0	MSB LSB 2^n 2^0		
XNP Message							
Version Number	8	0	00000000	00000000	00000000	0x00	0
XNP Parameter Update Message							
Message Number	8	26	00011010	00011010	00011010	0x1A	1
Message Length	8	8	00001000	00001000	00001000	0x08	2
Parameter Update Identifier	8	1	00000001	00000001	00000001	0x01	3
Station Identifier	32	1234	00000000 00000000 00000100 11010010	00000000 00000000 00000100 11010010	00000000 00000000 00000100 11010010	0x00 0x00 0x04 0xD2	4 5 6 7
Link Address	8	12	00001100	00001100	00001100	0x0C	8
XNP Data Blocks							
Station ID Block							
Block Number	8	1	00000001	00000001	00000001	0x01	9
Block Length	8	6	00000110	00000110	00000110	0x06	10
Unique Id	32	1225	00000000 00000000 00000100 11001001	00000000 00000000 00000100 11001001	00000000 00000000 00000100 11001001	0x00 0x00 0x04 0xC9	11 12 13 14
NAD Ranking Block							

Downloaded from http://www.everyspec.com

APPENDIX E

TABLE XLVI. XNP parameter update message with data blocks - Continued.

Field Name	Length (bits)	Value (Dec)	Value (Binary)	Field Fragments	Octet Value (Binary)	Octet Value (Hex)	Octet Number
			MSB 2^n LSB 2^0	MSB 2^n LSB 2^0	MSB 2^n LSB 2^0		
Block Number	8	11	00001011	00001011	00001011	0x0B	15
Block Length	8	3	00000011	00000011	00000011	0x03	16
Subscriber Rank	8	1	00000001	00000001	00000001	0x01	17
Station ID Block							
Block Number	8	1	00000001	00000001	00000001	0x01	18
Block Length	8	6	00000110	00000110	00000110	0x06	19
Unique Id	32	1231	00000000 00000000 00000100 11001111	00000000 00000000 00000100 11001111	00000000 00000000 00000100 11001111	0x00 0x00 0x04 0xCF	20 21 22 23
NAD Ranking Block							
Block Number	8	11	00001011	00001011	00001011	0x0B	24
Block Length	8	3	00000011	00000011	00000011	0x03	25
Subscriber Rank	8	2	00000010	00000010	00000010	0x02	26
Station ID Block							
Block Number	8	1	00000001	00000001	00000001	0x01	27
Block Length	8	6	00000110	00000110	00000110	0x06	28
Unique Id	32	1244	00000000 00000000 00000100 11011100	00000000 00000000 00000100 11011100	00000000 00000000 00000100 11011100	0x00 0x00 0x04 0xDC	29 30 31 32
NAD Ranking Block							
Block Number	8	11	00001011	00001011	00001011	0x0B	33
Block Length	8	3	00000011	00000011	00000011	0x03	34
Subscriber Rank	8	4	00000100	00000100	00000100	0x04	35
Station ID Block							
Block Number	8	1	00000001	00000001	00000001	0x01	36
Block Length	8	6	00000110	00000110	00000110	0x06	37

Downloaded from http://www.everyspec.com

APPENDIX E

TABLE XLVI. XNP parameter update message with data blocks - Continued.

Field Name	Length (bits)	Value (Dec)	Value (Binary)	Field Fragments	Octet Value (Binary)	Octet Value (Hex)	Octet Number
			MSB 2^n LSB 2^0	MSB 2^n LSB 2^0	MSB 2^n LSB 2^0		
Unique Id	32	1234	*0*0000000 00000000 00000100 11010010	*0*0000000 00000000 00000100 11010010	*0*0000000 00000000 00000100 11010010	0x00 0x00 0x04 0xD2	38 39 40 41
NAD Ranking Block							
Block Number	8	11	*0*0001011	*0*0001011	*0*0001011	0x0B	42
Block Length	8	3	*0*0000011	*0*0000011	*0*0000011	0x03	43
Subscriber Rank	8	3	*0*0000011	*0*0000011	*0*0000011	0x03	44
Terminator block	8	255	*1*1111111	*1*1111111	*1*1111111	0xFF	45

3. Type 1 Acknowledgment

a. Transmission Header (see Appendix G Table LXVIII):

Selection Bits:		
FEC	1	(Yes)
TDC	1	(Yes)
Scrambling	0	(No)
Topology Update ID	y	(Each station's current #)
Transmission Queue:		
T-bits	1	(DAP-NAD)
Data Link Precedence	0	(Urgent)
First Subscriber Number	zz	(Using old #)

b. Link Layer Header (see Appendix G Table LXV):

Source Address:		
C/R Bit	1	(Response)
Address	xx	(Acknowledging station)
Destination Address:		
Extension Bit	1	(Last one)
Address	2	(Network Controller)
Control Field	51	(URR Response)

Downloaded from http://www.everyspec.com

4. Join Accept Message

a. Transmission Header (see Appendix G Table LXVIII):

Selection Bits:		
FEC	1	(Yes)
TDC	1	(Yes)
Scrambling	0	(No)
Topology Update ID	0	(Initial)
Transmission Queue:		
T-bits	1	(DAP-NAD)
Data Link Precedence	1	(Priority)
First Subscriber Number	zz	

b. Link Layer Header (see Appendix G Table LXV):

Source Address:		
C/R Bit	1	(Response)
Address	2	(Network Controller)
Destination Address:		
Extension Bit	1	(Last one)
Address	1	(Net Entry)
Control Field	3	(UI, ACK not required)

c. Intranet Header (see Appendix G Table LXIV):

Version #	0	(Current Version)
Message Type	6	(XNP)
Header Length	3	(Minimum)
Type of Service	48	(Priority, low delay)

d. XNP Message:

Version #	0	(Current Version)
Message Number	21	(Join Accept Message)
Message Length	8	(Join Accept Message Length)
Parameter Update Identifier	1	(ID is 1 for this example)
Station Identifier	1234	[in the least significant 24-bits, Unit Reference Number of joiner]
Link Address	12	[Joiner's assigned link address]

Downloaded from http://www.everyspec.com

APPENDIX E

XNP Data Blocks:

Data Block 2	Basic Network Parameters
Data Block 4	Type 3 Network Parameters
Data Block 5	Deterministic NAD Parameters
Data Block 12	Intranet Parameters
Data Block 1	Station Identification (Station #1)
Data Block 11	NAD Ranking (Station #1)
•	
•	
•	
Data Block 1	Station Ident. (Last station)
Data Block 11	NAD Ranking (Last station)
Terminator Block	255

Table XLVII illustrates the construction of the XNP Join Accept Message with Data Blocks.

TABLE XLVII. XNP join accept message.

Field Name	**Length** (bits)	**Value** (Dec)	**Value** (Binary)	**Field Fragments**	**Octet Value** (Binary)	**Octet Value** (Hex)	**Octet Number**
			MSB 2^n **LSB** 2^0	**MSB** 2^n **LSB** 2^0	**MSB** 2^n **LSB** 2^0		
XNP Message							
Version Number	8	0	00000000	00000000	00000000	0x00	0
XNP Join Accept Message							
Message Number	8	21	00010101	00010101	00010101	0x15	1
Message Length	8	8	00001000	00001000	00001000	0x08	2
Parameter Update Identifier	8	1	00000001	00000001	00000001	0x01	3
Station Identifier	32	1234	00000000 00000000 00000100 11010010	00000000 00000000 00000100 11010010	00000000 00000000 00000100 11010010	0x00 0x00 0x04 0xD2	4 5 6 7
Link Address	8	12	00001100	00001100	00001100	0x0C	8

Downloaded from http://www.everyspec.com

APPENDIX E

TABLE XLVII. XNP join accept message - Continued.

Field Name	Length (bits)	Value (Dec)	Value (Binary)	Field Fragments	Octet Value (Binary)	Octet Value (Hex)	Octet Number
			MSB LSB 2^n 2^0	MSB LSB 2^n 2^0	MSB LSB 2^n 2^0		
XNP Data Blocks							
Basic Network Parameters Block							
Block Number	8	2	00000010	00000010	00000010	0x02	9
Block Length	8	16	00010000	00010000	00010000	0x10	10
Individual/Network Capability	8	0	00000000	00000000	00000000	0x00	11
Link Address	8	12	00001100	00001100	00001100	0x0C	12
Station Class	8	3	00000011	00000011	00000011	0x03	13
NAD Methods	8	3	00000011	00000011	00000011	0x03	14
Group Address Bit Map							
127 - 120	8	255	11111111	11111111	11111111	0xFF	15
119 - 112	8	255	11111111	11111111	11111111	0xFF	16
111 - 104	8	255	11111111	11111111	11111111	0xFF	17
103 - 96	8	254	11111110	11111110	11111110	0xFE	18
Concatenation Capability	8	3	00000011	00000011	00000011	0x03	19
FEC/TDC/Scrambling Mode	8	3	00000011	00000011	00000011	0x03	20
Max. UI, DIA and I Info. Octets	16	3345	00001101 00010001	00001101 00010001	00001101 00010001	0x0D 0x11	21 22
Maximum Transmit Time	16	40	00000000 00101000	00000000 00101000	00000000 00101000	0x00 0x28	23 24
Type 3 Parameters Block							
Block Number	8	4	00000100	00000100	00000100	0x04	25
Block Length	8	5	00000101	00000101	00000101	0x05	26
Type 3 Retransmissions	8	2	00000010	00000010	00000010	0x02	27

Downloaded from http://www.everyspec.com

APPENDIX E

TABLE XLVII. XNP join accept message - Continued.

Field Name	Length (bits)	Value (Dec)	Value (Binary)	Field Fragments	Octet Value (Binary)	Octet Value (Hex)	Octet Number
			MSB LSB 2^n 2^0	MSB LSB 2^n 2^0	MSB LSB 2^n 2^0		
Busy State Timer	16	60	00000000 00111100	00000000 00111100	00000000 00111100	0x00 0x3C	28 29
Deterministic NAD Parameter Block							
Block Number	8	5	00000101	00000101	00000101	0x05	30
Block Length	8	6	00000110	00000110	00000110	0x06	31
Number of Stations	8	6	00000110	00000110	00000110	0x06	32
Number of NAD Priorities	8	4	00000100	00000100	00000100	0x04	33
Number of NAD Slots	8	6	00000110	00000110	00000110	0x06	34
NAD Slot Duration	16	1000	00000011 11101000	00000011 11101000	00000011 11101000	0x03 0xE8	35 36
Intranet Parameters Block							
Block Number	8	12	00001100	00001100	00001100	0x0C	37
Block Length	8	11	00001011	00001011	00001011	0x0B	38
Min Update Per.	8	30	00011110	00011110	00011110	0x1E	39
Topology Update Precedence	8	7	00000111	00000111	00000111	0x07	40
Relayer Status	8	0	00000000	00000000	00000000	0x00	41
ACK Timer (fixed)	16	100	00000000 01100100	00000000 01100100	00000000 01100100	0x00 0x64	42 43
ACK Timer (prop)	16	100	00000000 01100100	00000000 01100100	00000000 01100100	0x00 0x64	44 45
Retransmit Count	8	2	00000010	00000010	00000010	0x02	46
Link Failure Threshold	8	2	00000010	00000010	00000010	0x02	47
Station ID Block							
Block Number	8	1	00000001	00000001	00000001	0x01	48

Downloaded from http://www.everyspec.com

APPENDIX E

TABLE XLVII. XNP join accept message - Continued.

Field Name	Length (bits)	Value (Dec)	Value (Binary)	Field Fragments	Octet Value (Binary)	Octet Value (Hex)	Octet Number
			MSB LSB 2^n 2^0	MSB LSB 2^n 2^0	MSB LSB 2^n 2^0		
Block Length	8	6	00000110	00000110	00000110	0x06	49
Unique Id	32	1225	00000000 00000000 00000100 11001001	00000000 00000000 00000100 11001001	00000000 00000000 00000100 11001001	0x00 0x00 0x04 0xC9	50 51 52 53
NAD Ranking Block							
Block Number	8	11	00001011	00001011	00001011	0x0B	54
Block Length	8	3	00000011	00000011	00000011	0x03	55
Subscriber Rank	8	1	00000001	00000001	00000001	0x01	56
Station ID Block							
Block Number	8	1	00000001	00000001	00000001	0x01	57
Block Length	8	6	00000110	00000110	00000110	0x06	58
Unique Id	32	1231	00000000 00000000 00000100 11001111	00000000 00000000 00000100 11001111	00000000 00000000 00000100 11001111	0x00 0x00 0x04 0xCF	59 60 61 62
NAD Ranking Block							
Block Number	8	11	00001011	00001011	00001011	0x0B	63
Block Length	8	3	00000011	00000011	00000011	0x03	64
Subscriber Rank	8	2	00000010	00000010	00000010	0x02	65
Station ID Block							
Block Number	8	1	00000001	00000001	00000001	0x01	66
Block Length	8	6	00000110	00000110	00000110	0x06	67
Unique Id	32	1244	00000000 00000000 00000100 11011100	00000000 00000000 00000100 11011100	00000000 00000000 00000100 11011100	0x00 0x00 0x04 0xDC	68 69 70 71
NAD Ranking Block							

Downloaded from http://www.everyspec.com

APPENDIX E

TABLE XLVII. XNP join accept message - Continued.

Field Name	Length (bits)	Value (Dec)	Value (Binary)	Field Fragments	Octet Value (Binary)	Octet Value (Hex)	Octet Number
			MSB LSB 2^n 2^0	MSB LSB 2^n 2^0	MSB LSB 2^n 2^0		
Block Number	8	11	*0*0001011	*0*0001011	*0*0001011	0x0B	72
Block Length	8	3	*0*0000011	*0*0000011	*0*0000011	0x03	73
Subscriber Rank	8	4	*0*0000100	*0*0000100	*0*0000100	0x04	74
Station ID Block							
Block Number	8	1	*0*0000001	*0*0000001	*0*0000001	0x01	75
Block Length	8	6	*0*0000110	*0*0000110	*0*0000110	0x06	76
Unique Id	32	1234	*0*0000000 00000000 00000100 11010010	*0*0000000 00000000 00000100 11010010	*0*0000000 00000000 00000100 11010010	0x00 0x00 0x04 0xD2	77 78 79 80
NAD Ranking Block							
Block Number	8	11	*0*0001011	*0*0001011	*0*0001011	0x0B	81
Block Length	8	3	*0*0000011	*0*0000011	*0*0000011	0x03	82
Subscriber Rank	8	3	*0*0000011	*0*0000011	*0*0000011	0x03	83
Terminator block	8	255	*1*1111111	*1*1111111	*1*1111111	0xFF	84

Downloaded from http://www.everyspec.com

5. Hello Message

a. Transmission Header (see Appendix G Table LXVIII):

Selection Bits:		
FEC	1	(Yes)
TDC	1	(Yes)
Scrambling	0	(No)
Topology Update ID	0	(Initial)
Transmission Queue:		
T-bits	1	(1: DAP-NAD)
Data Link Precedence	0	(0: Urgent)
First Subscriber Number	zz	

b. Link Layer Header (see Appendix G Table LXV):

Source Address:		
C/R Bit	0	(Command)
Address	1	(1: Net Entry - Joiner)
Destination Address:		
Extension Bit	1	(Last one)
Address	127	(Global Multicast)
Control Field	3	(3: UI, ACK not required)

c. Intranet Header (see Appendix G Table LXIV):

Version #	0	(Current Version)
Message Type	6	(XNP)
Header Length	3	(Minimum)
Type of Service	240	(Network Control, low delay)

d. XNP Message:

Version #	0	(Current Version)
Message Number	23	(Hello Message)
Message Length	7	(Hello Message Length)
Station Identifier	1234	[in the least significant 24-bits, Unit Reference Number of joiner]
Link Address	12	(Data link address of the Joiner)
Terminator Block	255	

Downloaded from http://www.everyspec.com

APPENDIX E

Table XLVIII illustrates the construction of the XNP Hello Message.

TABLE XLVIII. XNP hello message.

Field Name	**Length (bits)**	**Value (Dec)**	**Value (Binary)**	**Field Fragments**	**Octet Value (Binary)**	**Octet Value (Hex)**	**Octet Number**
			MSB 2^n LSB 2^0	**MSB 2^n LSB 2^0**	**MSB 2^n LSB 2^0**		
XNP Message							
Version Number	8	0	*0*0000000	*0*0000000	*0*0000000	0x00	0
XNP Hello Message							
Message Number	8	23	*0*0010111	*0*0010111	*0*0010111	0x17	1
Message Length	8	7	*0*0000111	*0*0000111	*0*0000111	0x07	2
Station Identifier	32	1234	*0*0000000 00000000 00000100 11010010	*0*0000000 00000000 00000100 11010010	*0*0000000 00000000 00000100 11010010	0x00 0x00 0x04 0xD2	3 4 5 6
Link Address	8	12	*0*0001100	*0*0001100	*0*0001100	0x0C	7
Terminator block	8	255	*1*1111111	*1*1111111	*1*1111111	0xFF	8

E.6.4.2 Centralized network control, disconnected joiner. In this example, there is a single, centralized network controller and it is not in direct line of sight to the joiner. The network is using data link Types 1 and 2, but not Type 4, and is using DAP-NAD. The joining station has all optional capabilities. Therefore the sequence of events is shown in Figure 45 and is described in section E.6.4.2.1. Detailed message formats are provided in section E.6.4.2.2.

Downloaded from http://www.everyspec.com

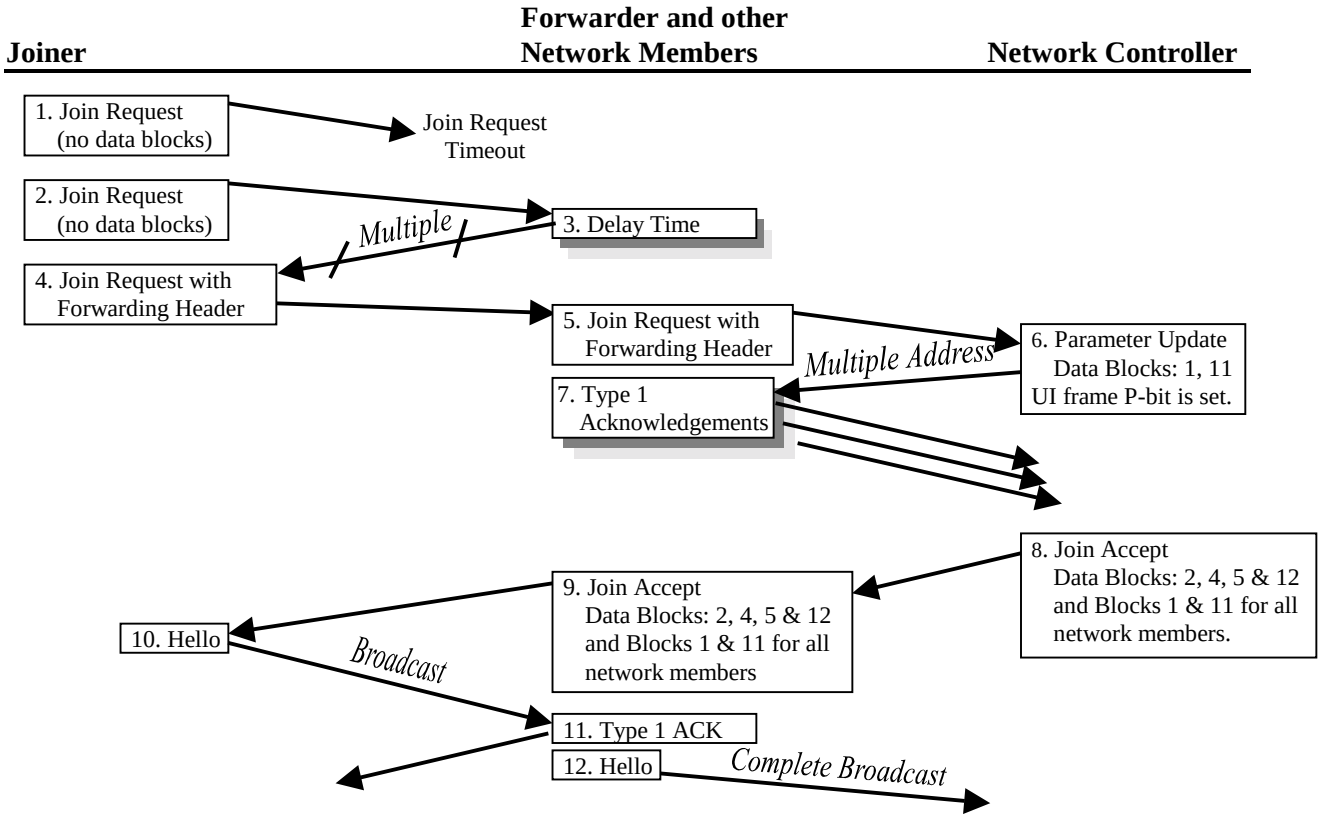

FIGURE 45. Joining a disconnected, centralized network.

E.6.4.2.1 Sequence of events.

1. The joining station sends a UI frame with a Join Request message to the network controller requesting entry to the network. No data blocks are appended since the joining station does not have knowledge of hardware parameters, but does have all optional capabilities.

   Because the joiner is not in direct line of sight with the network controller, network controller does not receive the Join Request and there is no response.

2. The joining station sends a UI Command with a Join Request message to the Global Multicast data link address requesting entry to the network. This Join Request message has a Forwarding Header identifying the network controller as the Destination.

Downloaded from http://www.everyspec.com

3. The Join Request message is received by stations 34, 44, 25 and 31. These four stations send a Delay Time message to the joining station.

4. The joining station selects station 25 as the forwarder and uses this station to forward a Join Request message to the network controller.

5. Station 25 forwards the Join Request message to the network controller for the joining station.

6. The network controller computes the ranking for DAP-NAD and transmits a Parameter Update message to all network members. This Parameter Update message includes blocks 1 and 11 to designate the order of NAD access for all stations in the network. It is sent with the P-bit set to 1 to provide some level of assurance that it has been received and implemented by all participants.

   All stations update to new subscriber order.

7. Each network participant sends a Type 1 Acknowledgment of the UI frame carrying the Parameter Update message to the network controller.

8. The network controller responds with a Join Accept message to the joiner with a Link Address to specify the address assigned to the joining station. Data block 2, block 4, block 5, block 9 and block 12 are appended to the Join Accept message to provide the network operating parameters to the joining station. The Join Accept also contains Blocks 1 and 11 to provide the relative NAD rankings for each network member.

9. Station 25 forwards network controller's Join Accept message (and all data blocks) to the joining station.

10. The joining station sends a Hello message to announce its entry into the network. This Hello message is broadcast locally, and also addressed to forwarding station 25 so that it can be broadcast completely through the network.

11. Forwarding station 25 sends a Type 1 Acknowledgment for the UI frame carrying the Hello message to the joining station.

12. Station 25 forwards the Hello message throughout the network using Intranet Relay.

Downloaded from http://www.everyspec.com

E.6.4.2.2 Message formats.

Five stations are used for the illustration:

Station 25:
- Station Identifier: 1225
- Ranking: 1
- Link Address: 25

Station 31:
- Station Identifier: 1231
- Ranking: 2
- Link Address: 31

Station 44:
- Station Identifier: 1244
- Ranking: 4
- Link Address: 44

Station 34:
- Station Identifier: 1234
- Ranking: 3
- Link Address: 12

Station 55:
- Station Identifier: 1255 (new joiner)
- Ranking: 5

1. Join Request Message to Network Controller

a. Transmission Header (see Appendix G Table LXVIII):

Selection Bits:		
FEC	1	(Yes)
TDC	1	(Yes)
Scrambling	0	(No)
Topology Update ID	y	(Station's current #)
Transmission Queue:		
T-bits	0	(No Info)
Trans. Queue Subfield	0	(Ignored)

Downloaded from http://www.everyspec.com

b. Link Layer Header (see Appendix G Table LXV):

Source Address:		
C/R Bit	0	(Command)
Address	1	(Net Entry)
Destination Address:		
Extension Bit	1	(Last one)
Address	2	(Network Controller)
Control Field	3	(UI, ACK not required)

c. Intranet Header (see Appendix G Table LXIV):

Version #	0	(Current Version)
Message Type	6	(XNP)
Header Length	3	(Minimum)
Type of Service	48	(Priority, low delay)

d. XNP Message:

Version #	0	(Current Version)
Message Number	20	(Join Request Message)
Message Length	6	(Join Request Message Length)
Station Identifier	1255	[in the least significant 24-bits, Unit Reference Number of joiner]
Terminator Block	255	

Table XLIX illustrates the construction of the XNP Join Request Message to Network Controller.

Downloaded from http://www.everyspec.com

APPENDIX E

TABLE XLIX. XNP join request message to network controller.

Field Name	**Length** (bits)	**Value** (Dec)	**Value** (Binary)	**Field Fragments**	**Octet Value** (Binary)	**Octet Value** (Hex)	**Octet Number**
			MSB 2^n **LSB** 2^0	**MSB** 2^n **LSB** 2^0	**MSB** 2^n **LSB** 2^0		
XNP Message							
Version Number	8	0	*0*0000000	*0*0000000	*0*0000000	0x00	0
Join Request Message							
Message Number	8	20	*0*0010100	*0*0010100	*0*0010100	0x14	1
Message Length	8	6	*0*0000110	*0*0000110	*0*0000110	0x06	2
Station Identifier	32	1255	*0*0000000 00000000 00000100 11100111	*0*0000000 00000000 00000100 11100111	*0*0000000 00000000 00000100 11100111	0x00 0x00 0x04 0xE7	3 4 5 6
Terminator block	8	255	*1*1111111	*1*1111111	*1*1111111	0xFF	7

2. Join Request Message to Global Multicast Address

a. Transmission Header (see Appendix G Table LXVIII):

Selection Bits:		
FEC	1	(Yes)
TDC	1	(Yes)
Scrambling	0	(No)
Topology Update ID	0	(Initial)
Transmission Queue:		
T-bits	0	(No Info)
Trans. Queue Subfield	0	(Ignored)

Downloaded from http://www.everyspec.com

b. Link Layer Header (see Appendix G Table LXV):

Source Address:		
C/R Bit	0	(Command)
Address	1	(Net Entry)
Destination Address:		
Extension Bit	1	(Last one)
Address	127	(Global Multicast)
Control Field	3	(UI, ACK not required)

c. Intranet Header (see Appendix G Table LXIV):

Version #	0	(Current Version)
Message Type	6	(XNP)
Header Length	3	(Minimum)
Type of Service	48	(Priority, low delay)

d. XNP Message:

Version #	0	(Current Version)
Forwarding Header:		
Message Number	0	(Forwarding Header)
Source Address	1	(Net Entry)
Forwarder Address	0	(Unknown)
Destination Address	2	(Network Controller)
Message Number	20	(Join Request Message)
Message Length	6	(Join Request Message Length)
Station Identifier	1255	[in the least significant 24-bits, Unit Reference Number of joiner]
Terminator Block	255	

Table L illustrates the construction of the XNP Join Request Message to Global Multicast Address.

Downloaded from http://www.everyspec.com

APPENDIX E

TABLE L. XNP join request message to global multicast address.

Field Name	Length (bits)	Value (Dec)	Value (Binary)	Field Fragments	Octet Value (Binary)	Octet Value (Hex)	Octet Number
			MSB LSB 2^n 2^0	MSB LSB 2^n 2^0	MSB LSB 2^n 2^0		
XNP Message							
Version Number	8	0	00000000	00000000	00000000	0x00	0
Forwarding Header							
Message Number	8	0	00000000	00000000	00000000	0x00	1
Source Address	8	1	00000001	00000001	00000001	0x01	2
Forwarder Address	8	0	00000000	00000000	00000000	0x00	3
Destination Address	8	2	00000010	00000010	00000010	0x02	4
Join Request Message							
Message Number	8	20	00010100	00010100	00010100	0x14	5
Message Length	8	6	00000110	00000110	00000110	0x06	6
Station Identifier	32	1255	00000000 00000000 00000100 11100111	00000000 00000000 00000100 11100111	00000000 00000000 00000100 11100111	0x00 0x00 0x04 0xE7	7 8 9 10
Terminator block	8	255	11111111	11111111	11111111	0xFF	11

3. Delay Time Message

a. Transmission Header (see Appendix G Table LXVIII):
Selection Bits:

FEC	1	(Yes)
TDC	1	(Yes)
Scrambling	0	(No)
Topology Update ID	y	(Station's current #)

Downloaded from http://www.everyspec.com

Transmission Queue:		
T-bits	1	(DAP-NAD)
Data Link Precedence	1	(Priority)
First Subscriber Number	zz	

b. Link Layer Header (see Appendix G Table LXV):

Source Address:		
C/R	0	(Command)
Address	25	(Forwarder station 25)
Destination Address:		
Extension Bit	1	(Last one)
Address	1	(Net Entry)
Control Field	3	(UI, ACK not required)

c. Intranet Header (see Appendix G Table LXIV):

Version #	0	(Current Version)
Message Type	6	(XNP)
Header Length	3	(Minimum)
Type of Service	48	(Priority, low delay)

d. XNP Message:

Version #	0	(Current Version)
Forwarding Header:		
Message Number	0	(Forwarding Header)
Source Address	25	(Forwarder station 25)
Forwarder Address	25	(Forwarder station 25)
Destination Address	1	(Net Entry)
Message Number	27	(Delay Time Message)
Message Length	7	(Delay Time Message Length)
Station Identifier	1255	[in the least significant 24-bits, Unit Reference Number of joiner]
Time	tttt	(Seconds)
Terminator Block	255	

Table LI illustrates the construction of the XNP Delay Time Message.

Downloaded from http://www.everyspec.com

APPENDIX E

TABLE LI. XNP delay time message.

Field Name	Length (bits)	Value (Dec)	Value (Binary)	Field Fragments	Octet Value (Binary)	Octet Value (Hex)	Octet Number
			MSB LSB 2^n 2^0	MSB LSB 2^n 2^0	MSB LSB 2^n 2^0		
XNP Message							
Version Number	8	0	00000000	00000000	00000000	0x00	0
Forwarding Header							
Message Number	8	0	00000000	00000000	00000000	0x00	1
Source Address	8	25	00011001	00011001	00011001	0x19	2
Forwarder Address	8	25	00011001	00011001	00011001	0x19	3
Destination Address	8	1	00000001	00000001	00000001	0x01	4
XNP Delay Time Message							
Message Number	8	27	00011011	00011011	00011011	0x1B	5
Message Length	8	7	00000111	00000111	00000111	0x07	6
Station Identifier	32	1255	00000000 00000000 00000100 11100111	00000000 00000000 00000100 11100111	00000000 00000000 00000100 11100111	0x00 0x00 0x04 0xE7	7 8 9 10
Time	8	100	01100100	01100100	01100100	0x64	11
Terminator block	8	255	11111111	11111111	11111111	0xFF	12

4. Join Request Message to Forwarder

a. Transmission Header (see Appendix G Table LXVIII):
Selection Bits:

FEC	1	(Yes)
TDC	1	(Yes)
Scrambling	0	(No)
Topology Update ID	0	(Initial)

Downloaded from http://www.everyspec.com

Transmission Queue:		
T-bits	0	(0: No Info)
Trans. Queue Subfield	0	(0: Ignored)

b. Link Layer Header (see Appendix G Table LXV):

Source Address:		
C/R Bit	0	(Command)
Address	1	(Net Entry)
Destination Address:		
Extension Bit	1	(Last one)
Address	25	(Forwarder station 25)
Control Field	3	(UI, ACK not required)

c. Intranet Header (see Appendix G Table LXIV):

Version #	0	(Current Version)
Message Type	6	(XNP)
Header Length	3	(Minimum)
Type of Service	48	(Priority, low delay)

d. XNP Message:

Version #	0	(Current Version)
Forwarding Header:		
Message Number	0	(Forwarding Header)
Source Address	1	(Net Entry)
Forwarder Address	25	(Station 25)
Destination Address	2	(Network Controller)
Message Number	20	(Join Request Message)
Message Length	6	(Current Join Request Message Length)
Station Identifier	1255	[in the least significant 24-bits, Unit Reference Number of joiner]
Terminator Block	255	

Table LII illustrates the construction of the XNP Join Request Message to Forwarder.

Downloaded from http://www.everyspec.com

APPENDIX E

TABLE LII. XNP join request message to forwarder.

Field Name	Length (bits)	Value (Dec)	Value (Binary)	Field Fragments	Octet Value (Binary)	Octet Value (Hex)	Octet Number
			MSB LSB 2^n 2^0	MSB LSB 2^n 2^0	MSB LSB 2^n 2^0		
XNP Message							
Version Number	8	0	00000000	00000000	00000000	0x00	0
Forwarding Header							
Message Number	8	0	00000000	00000000	00000000	0x00	1
Source Address	8	1	00000001	00000001	00000001	0x01	2
Forwarder Address	8	25	00011001	00011001	00011001	0x19	3
Destination Address	8	2	00000010	00000010	00000010	0x02	4
Join Request Message							
Message Number	8	20	00010100	00010100	00010100	0x14	5
Message Length	8	6	00000110	00000110	00000110	0x06	6
Station Identifier	32	1255	00000000 00000000 00000100 11100111	00000000 00000000 00000100 11100111	00000000 00000000 00000100 11100111	0x00 0x00 0x04 0xE7	7 8 9 10
Terminator block	8	255	11111111	11111111	11111111	0xFF	11

5. Join Request Message to Network Controller from Forwarder

a. Transmission Header (see Appendix G Table LXVIII):
Selection Bits:

FEC	1	(Yes)
TDC	1	(Yes)
Scrambling	0	(No)
Topology Update ID	y	(Station's current #)

Downloaded from http://www.everyspec.com

Transmission Queue:		
T-bits	1	(DAP-NAD)
Data Link Precedence	1	(Priority)
First Subscriber Number	zz	

b. Link Layer Header (see Appendix G Table LXV):

Source Address:		
C/R Bit	0	(Command)
Address	25	(Forwarder station 25)
Destination Address:		
Extension Bit	1	(Last one)
Address	2	(Network Controller)
Control Field	3	(UI, ACK not required)

c. Intranet Header (see Appendix G Table LXIV):

Version #	0	(Current Version)
Message Type	6	(XNP)
Header Length	3	(Minimum)
Type of Service	48	(Priority, low delay)

d. XNP Message:

Version #	0	(Current Version)
Forwarding Header:		
Message Number	0	(Forwarding Header)
Source Address	1	(Net Entry)
Forwarder Address	25	
Destination Address	2	(Network Controller)
Message Number	20	(Join Request Message)
Message Length	6	(Join Request Message Length)
Station Identifier	1255	[in the least significant 24-bits, Unit Reference Number of joiner]
Terminator Block	255	

Table LIII illustrates the construction of the XNP Join Request Message to Network Controller from Forwarder.

Downloaded from http://www.everyspec.com

APPENDIX E

TABLE LIII. XNP join request message to network controller from forwarder.

Field Name	Length (bits)	Value (Dec)	Value (Binary)	Field Fragments	Octet Value (Binary)	Octet Value (Hex)	Octet Number
			MSB LSB 2^n 2^0	MSB LSB 2^n 2^0	MSB LSB 2^n 2^0		
XNP Message							
Version Number	8	0	*0*0000000	*0*0000000	*0*0000000	0x00	0
Forwarding Header							
Message Number	8	0	*0*0000000	*0*0000000	*0*0000000	0x00	1
Source Address	8	1	*0*0000001	*0*0000001	*0*0000001	0x01	2
Forwarder Address	8	25	*0*0011001	*0*0011001	*0*0011001	0x19	3
Destination Address	8	2	*0*0000010	*0*0000010	*0*0000010	0x02	4
Join Request Message							
Message Number	8	20	*0*0010100	*0*0010100	*0*0010100	0x14	5
Message Length	8	6	*0*0000110	*0*0000110	*0*0000110	0x06	6
Station Identifier	32	1255	*0*0000000 00000000 00000100 11100111	*0*0000000 00000000 00000100 11100111	*0*0000000 00000000 00000100 11100111	0x00 0x00 0x04 0xE7	7 8 9 10
Terminator block	8	255	*1*1111111	*1*1111111	*1*1111111	0xFF	11

6. Parameter Update Message

a. Transmission Header (see Appendix G Table LXVIII):
Selection Bits:

FEC	1	(Yes)
TDC	1	(Yes)
Scrambling	0	(No)
Topology Update ID	0	(Initial)

Downloaded from http://www.everyspec.com

Transmission Queue:

T-bits	1	(DAP-NAD)
Data Link Precedence	0	(Urgent)
First Subscriber Number	zz	

b. Link Layer Header (see Appendix G Table LXV):

Source Address:		
C/R Bit	0	(Command)
Address	2	(Network Controller)
Destination Address(es)	[up to 16 data link addresses]	
Control Field	19	(UI, ACK required)

c. Intranet Header (see Appendix G Table LXIV):

Version #	0	(Current Version)
Message Type	6	(XNP)
Header Length	3	(Minimum)
Type of Service	240	(Network Control, low delay)

d. XNP Message:

Version #	0	(Current Version)
Message Number	26	(Parameter Update Message)
Message Length	8	(Parameter Update Message Length)
Parameter Update Identifier	1	(ID is 1 for this example)
Station Identifier	1255	[in the least significant 24-bits, Unit Reference Number of joiner]
Link Address	55	(Joiner's assigned link address)
XNP Data Blocks		
Data Block 1	Station Identification (Station #1)	
Data Block 11	NAD Ranking (Station #1)	
•		
•		
•		
Data Block 1	Station Ident. (Last station)	
Data Block 11	NAD Ranking (Last station)	
Terminator Block	255	

Table LIV illustrates the construction of the XNP Parameter Update Message.

Downloaded from http://www.everyspec.com

APPENDIX E

TABLE LIV. XNP parameter update message.

Field Name	Length (bits)	Value (Dec)	Value (Binary)	Field Fragments	Octet Value (Binary)	Octet Value (Hex)	Octet Number
			MSB LSB 2^n 2^0	MSB LSB 2^n 2^0	MSB LSB 2^n 2^0		
XNP Message							
Version Number	8	0	00000000	00000000	00000000	0x00	0
XNP Parameter Update Message							
Message Number	8	26	00011010	00011010	00011010	0x1A	1
Message Length	8	8	00001000	00001000	00001000	0x08	2
Parameter Update Identifier	8	1	00000001	00000001	00000001	0x01	3
Station Identifier	32	1255	00000000 00000000 00000100 11100111	00000000 00000000 00000100 11100111	00000000 00000000 00000100 11100111	0x00 0x00 0x04 0xE7	4 5 6 7
Link Address	8	55	00110111	00110111	00110111	0x37	8
XNP Data Blocks							
Station ID Block							
Block Number	8	1	00000001	00000001	00000001	0x01	9
Block Length	8	6	00000110	00000110	00000110	0x06	10
Unique Id	32	1225	00000000 00000000 00000100 11001001	00000000 00000000 00000100 11001001	00000000 00000000 00000100 11001001	0x00 0x00 0x04 0xC9	11 12 13 14
NAD Ranking Block							
Block Number	8	11	00001011	00001011	00001011	0x0B	15
Block Length	8	3	00000011	00000011	00000011	0x03	16
Subscriber Rank	8	1	00000001	00000001	00000001	0x01	17
Station ID Block							
Block Number	8	1	00000001	00000001	00000001	0x01	18
Block Length	8	6	00000110	00000110	00000110	0x06	19

Downloaded from http://www.everyspec.com

APPENDIX E

TABLE LIV. XNP parameter update message - Continued.

Field Name	Length (bits)	Value (Dec)	Value (Binary)	Field Fragments	Octet Value (Binary)	Octet Value (Hex)	Octet Number
			MSB LSB 2^n 2^0	MSB LSB 2^n 2^0	MSB LSB 2^n 2^0		
Unique Id	32	1231	00000000 00000000 00000100 11001111	00000000 00000000 00000100 11001111	00000000 00000000 00000100 11001111	0x00 0x00 0x04 0xCF	20 21 22 23
NAD Ranking Block							
Block Number	8	11	00001011	00001011	00001011	0x0B	24
Block Length	8	3	00000011	00000011	00000011	0x03	25
Subscriber Rank	8	2	00000010	00000010	00000010	0x02	26
Station ID Block							
Block Number	8	1	00000001	00000001	00000001	0x01	27
Block Length	8	6	00000110	00000110	00000110	0x06	28
Unique Id	32	1244	00000000 00000000 00000100 11011100	00000000 00000000 00000100 11011100	00000000 00000000 00000100 11011100	0x00 0x00 0x04 0xDC	29 30 31 32
NAD Ranking Block							
Block Number	8	11	00001011	00001011	00001011	0x0B	33
Block Length	8	3	00000011	00000011	00000011	0x03	34
Subscriber Rank	8	4	00000100	00000100	00000100	0x04	35
Station ID Block							
Block Number	8	1	00000001	00000001	00000001	0x01	36
Block Length	8	6	00000110	00000110	00000110	0x06	37
Unique Id	32	1234	00000000 00000000 00000100 11010010	00000000 00000000 00000100 11010010	00000000 00000000 00000100 11010010	0x00 0x00 0x04 0xD2	38 39 40 41
NAD Ranking Block							
Block Number	8	11	00001011	00001011	00001011	0x0B	42

Downloaded from http://www.everyspec.com

APPENDIX E

TABLE LIV. XNP parameter update message - Continued.

Field Name	Length (bits)	Value (Dec)	Value (Binary)	Field Fragments	Octet Value (Binary)	Octet Value (Hex)	Octet Number
			MSB LSB 2^n 2^0	MSB LSB 2^n 2^0	MSB LSB 2^n 2^0		
Block Length	8	3	00000011	00000011	00000011	0x03	43
Subscriber Rank	8	3	00000011	00000011	00000011	0x03	44
Station ID Block							
Block Number	8	1	00000001	00000001	00000001	0x01	45
Block Length	8	6	00000110	00000110	00000110	0x06	46
Unique Id	32	1255	00000000 00000000 00000100 11100111	00000000 00000000 00000100 11100111	00000000 00000000 00000100 11100111	0x00 0x00 0x04 0xE7	47 48 49 50
NAD Ranking Block							
Block Number	8	11	00001011	00001011	00001011	0x0B	51
Block Length	8	3	00000011	00000011	00000011	0x03	52
Subscriber Rank	8	5	00000101	00000101	00000101	0x05	53
Terminator block	8	255	11111111	11111111	11111111	0xFF	54

7. Type 1 Acknowledgment to UI Carrying Parameter Update Message

a. Transmission Header (see Appendix G Table LXVIII):

Selection Bits:

FEC	1	(Yes)
TDC	1	(Yes)
Scrambling	0	(No)
Topology Update ID	y	(Each station's current #)

Transmission Queue:

T-bits	1	(DAP-NAD)
Data Link Precedence	0	(Urgent)
First Subscriber Number	zz	(Using old ranking)

Downloaded from http://www.everyspec.com

b. Link Layer Header (see Appendix G Table LXV):

Source Address:		
C/R Bit	1	(Response)
Address	xxxxxxx	(Acknowledging station)
Destination Address:		
Extension Bit	1	(Last one)
Address	2	(Network Controller)
Control Field	51	(URR response)

8. Join Accept Message to Forwarder

a. Transmission Header (see Appendix G Table LXVIII):

Selection Bits:		
FEC	1	(Yes)
TDC	1	(Yes)
Scrambling	0	(No)
Topology Update ID	0	(Initial)
Transmission Queue:		
T-bits	1	(DAP-NAD)
Data Link Precedence	1	(Priority)
First Subscriber Number	zz	

b. Link Layer Header (see Appendix G Table LXV):

Source Address:		
C/R Bit	0	(Command)
Address	2	(Network Controller)
Destination Address:		
Extension Bit	1	(Last one)
Address	25	(Forwarder station 25)
Control Field	3	(UI, ACK not required)

c. Intranet Header (see Appendix G Table LXIV):

Version #	0	(Current Version)
Message Type	6	(XNP)
Header Length	3	(Minimum)
Type of Service	240	(Network Control, low delay)

Downloaded from http://www.everyspec.com

d. XNP Message:

Version #	0	(Current Version)
Forwarding Header:		
Message Number	0	(Forwarding Header)
Source Address	2	(Network Controller)
Forwarder Address	25	(Station 25)
Destination Address	1	(Net Entry)
Message Number	21	(Join Accept Message)
Message Length	8	(Join Accept Message Length)
Parameter Update Identifier	1	(ID is 1 for this example)
Station Identifier	1255	[in the least significant 24-bits, Unit Reference Number of joiner]
Link Address	55	[Joiner's assigned link address]

XNP Data Blocks:

Data Block 2	Basic Network Parameters
Data Block 4	Type 3 Network Parameters
Data Block 5	Deterministic NAD Parameters
Data Block 9	Type 2 Parameters
Data Block 12	Intranet Parameters
Data Block 1	Station Identification (Station #1)
Data Block 11	NAD Ranking (Station #1)
•	
•	
•	
Data Block 1	Station Ident. (Last station)
Data Block 11	NAD Ranking (Last station)
Terminator Block	255

Table LV illustrates the construction of the XNP Join Accept Message to Forwarder.

Downloaded from http://www.everyspec.com

APPENDIX E

TABLE LV. XNP join accept message to forwarder.

Field Name	Length (bits)	Value (Dec)	Value (Binary)	Field Fragments	Octet Value (Binary)	Octet Value (Hex)	Octet Number
			MSB LSB 2^n 2^0	MSB LSB 2^n 2^0	MSB LSB 2^n 2^0		
XNP Message							
Version Number	8	0	00000000	00000000	00000000	0x00	0
Forwarding Header							
Message Number	8	0	00000000	00000000	00000000	0x00	1
Source Address	8	2	00000010	00000010	00000010	0x02	2
Forwarder Address	8	25	00011001	00011001	00011001	0x19	3
Destination Address	8	1	00000001	00000001	00000001	0x01	4
XNP Join Accept Message							
Message Number	8	21	00010101	00010101	00010101	0x15	5
Message Length	8	8	00001000	00001000	00001000	0x08	6
Parameter Update Identifier	8	1	00000001	00000001	00000001	0x01	7
Station Identifier	32	1255	00000000 00000000 00000100 11100111	00000000 00000000 00000100 11100111	00000000 00000000 00000100 11100111	0x00 0x00 0x04 0xE7	8 9 10 11
Link Address	8	55	00110111	00110111	00110111	0x37	12
XNP Data Blocks							
Basic Network Parameters Block							
Block Number	8	2	00000010	00000010	00000010	0x02	13
Block Length	8	16	00010000	00010000	00010000	0x10	14
Individual/Network Capability	8	1	00000001	00000001	00000001	0x01	15
Link Address	8	55	00110111	00110111	00110111	0x37	16
Station Class	8	3	00000011	00000011	00000011	0x03	17

Downloaded from http://www.everyspec.com

APPENDIX E

TABLE LV. XNP join accept message to forwarder - Continued.

Field Name	Length (bits)	Value (Dec)	Value (Binary)	Field Fragments	Octet Value (Binary)	Octet Value (Hex)	Octet Number
			MSB LSB 2^n 2^0	MSB LSB 2^n 2^0	MSB LSB 2^n 2^0		
NAD Methods	8	3	*0*0000011	*0*0000011	*0*0000011	0x03	18
Group Address Bit Map							
127 - 120	8	255	*1*1111111	*1*1111111	*1*1111111	0xFF	19
119 - 112	8	255	11111111	11111111	11111111	0xFF	20
111 - 104	8	255	11111111	11111111	11111111	0xFF	21
103 - 96	8	254	11111110	11111110	11111110	0xFE	22
Concatenation Capability	8	3	*0*0000011	*0*0000011	*0*0000011	0x03	23
FEC/TDC/Scrambling Mode	8	3	*0*0000011	*0*0000011	*0*0000011	0x03	24
Max. UI, DIA and I Info. Octets	16	3345	*0*0001101 00010001	*0*0001101 00010001	*0*0001101 00010001	0x0D 0x11	25 26
Maximum Transmit Time	16	40	*0*0000000 00101000	*0*0000000 00101000	*0*0000000 00101000	0x00 0x28	27 28
Type 3 Parameters Block							
Block Number	8	4	*0*0000100	*0*0000100	*0*0000100	0x04	29
Block Length	8	3	*0*0000011	*0*0000011	*0*0000011	0x03	30
Type 3 Retransmissions	8	2	*0*0000010	*0*0000010	*0*0000010	0x02	31
Busy State Timer	16	60	*0*0000000 00111100	*0*0000000 00111100	*0*0000000 00111100	0x00 0x3C	32 33
Deterministic NAD Parameter Block							
Block Number	8	5	*0*0000101	*0*0000101	*0*0000101	0x05	34
Block Length	8	6	*0*0000110	*0*0000110	*0*0000110	0x06	35
Number of Stations	8	6	*0*0000110	*0*0000110	*0*0000110	0x06	36
Number of NAD Priorities	8	4	*0*0000100	*0*0000100	*0*0000100	0x04	37

Downloaded from http://www.everyspec.com

APPENDIX E

TABLE LV. XNP join accept message to forwarder - Continued.

Field Name	Length (bits)	Value (Dec)	Value (Binary)	Field Fragments	Octet Value (Binary)	Octet Value (Hex)	Octet Number
			MSB LSB 2^n 2^0	MSB LSB 2^n 2^0	MSB LSB 2^n 2^0		
Number of NAD Slots	8	6	00000110	00000110	00000110	0x06	38
NAD Slot Duration	16	1000	00000011 11101000	00000011 11101000	00000011 11101000	0x03 0xE8	39 40
Type 2 Parameters Block							
Block Number	8	9	00001001	00001001	00001001	0x09	41
Block Length	8	13	00001101	00001101	00001101	0x0D	42
ACK Timer	16	120	00000000 01111000	00000000 01111000	00000000 01111000	0x00 0x78	43 44
P-Bit Timer	8	10	00001010	00001010	00001010	0x0A	45
Reject Timer	16	160	00000000 10100000	00000000 10100000	00000000 10100000	0x00 0xA0	46 47
Max. Transmissions, N2	8	2	00000010	00000010	00000010	0x02	48
K Window	8	127	01111111	01111111	01111111	0x7F	49
K2 Threshold	8	127	01111111	01111111	01111111	0x7F	50
K3 Threshold	8	127	01111111	01111111	01111111	0x7F	51
Response Delay Timer Percent	8	64	01000000	01000000	01000000	0x40	52
Intranet Parameters Block							
Block Number	8	12	00001100	00001100	00001100	0x0C	53
Block Length	8	11	00001011	00001011	00001011	0x0B	54
Min Update Per.	8	30	00011110	00011110	00011110	0x1E	55
Topology Update Precedence	8	7	00000111	00000111	00000111	0x07	56
Relayer Status	8	0	00000000	00000000	00000000	0x00	57
ACK Timer (fixed)	16	100	00000000 01100100	00000000 01100100	00000000 01100100	0x00 0x64	58 59

Downloaded from http://www.everyspec.com

APPENDIX E

TABLE LV. XNP join accept message to forwarder - Continued.

Field Name	Length (bits)	Value (Dec)	Value (Binary)	Field Fragments	Octet Value (Binary)	Octet Value (Hex)	Octet Number
			MSB LSB 2^n 2^0	MSB LSB 2^n 2^0	MSB LSB 2^n 2^0		
ACK Timer (prop)	16	100	00000000 01100100	00000000 01100100	00000000 01100100	0x00 0x64	60 61
Retransmit Count	8	2	00000010	00000010	00000010	0x02	62
Link Failure Threshold	8	2	00000010	00000010	00000010	0x02	63
Station ID Block							
Block Number	8	1	00000001	00000001	00000001	0x01	64
Block Length	8	6	00000110	00000110	00000110	0x06	65
Unique Id	32	1225	00000000 00000000 00000100 11001001	00000000 00000000 00000100 11001001	00000000 00000000 00000100 11001001	0x00 0x00 0x04 0xC9	66 67 68 69
NAD Ranking Block							
Block Number	8	11	00001011	00001011	00001011	0x0B	70
Block Length	8	3	00000011	00000011	00000011	0x03	71
Subscriber Rank	8	1	00000001	00000001	00000001	0x01	72
Station ID Block							
Block Number	8	1	00000001	00000001	00000001	0x01	73
Block Length	8	6	00000110	00000110	00000110	0x06	74
Unique Id	32	1231	00000000 00000000 00000100 11001111	00000000 00000000 00000100 11001111	00000000 00000000 00000100 11001111	0x00 0x00 0x04 0xCF	75 76 77 78
NAD Ranking Block							
Block Number	8	11	00001011	00001011	00001011	0x0B	79
Block Length	8	3	00000011	00000011	00000011	0x03	80
Subscriber Rank	8	2	00000010	00000010	00000010	0x02	81
Station ID Block							
Block Number	8	1	00000001	00000001	00000001	0x01	82

Downloaded from http://www.everyspec.com

APPENDIX E

TABLE LV. XNP join accept message to forwarder - Continued.

Field Name	Length (bits)	Value (Dec)	Value (Binary)	Field Fragments	Octet Value (Binary)	Octet Value (Hex)	Octet Number
			MSB LSB 2^n 2^0	MSB LSB 2^n 2^0	MSB LSB 2^n 2^0		
Block Length	8	6	00000110	00000110	00000110	0x06	83
Unique Id	32	1244	00000000 00000000 00000100 11011100	00000000 00000000 00000100 11011100	00000000 00000000 00000100 11011100	0x00 0x00 0x04 0xDC	84 85 86 87
NAD Ranking Block							
Block Number	8	11	00001011	00001011	00001011	0x0B	88
Block Length	8	3	00000011	00000011	00000011	0x03	89
Subscriber Rank	8	4	00000100	00000100	00000100	0x04	90
Station ID Block							
Block Number	8	1	00000001	00000001	00000001	0x01	91
Block Length	8	6	00000110	00000110	00000110	0x06	92
Unique Id	32	1234	00000000 00000000 00000100 11010010	00000000 00000000 00000100 11010010	00000000 00000000 00000100 11010010	0x00 0x00 0x04 0xD2	93 94 95 96
NAD Ranking Block							
Block Number	8	11	00001011	00001011	00001011	0x0B	97
Block Length	8	3	00000011	00000011	00000011	0x03	98
Subscriber Rank	8	3	00000011	00000011	00000011	0x03	99
Station ID Block							
Block Number	8	1	00000001	00000001	00000001	0x01	100
Block Length	8	6	00000110	00000110	00000110	0x06	101
Unique Id	32	1255	00000000 00000000 00000100 11100111	00000000 00000000 00000100 11100111	00000000 00000000 00000100 11100111	0x00 0x00 0x04 0xE7	102 103 104 105
NAD Ranking Block							

Downloaded from http://www.everyspec.com

TABLE LV. XNP join accept message to forwarder - Continued.

Block Number	8	11	*0*0001011	*0*0001011	*0*0001011	0x0B	106
Block Length	8	3	*0*0000011	*0*0000011	*0*0000011	0x03	107
Subscriber Rank	8	5	*0*0000101	*0*0000101	*0*0000101	0x05	108
Terminator block	8	255	*1*1111111	*1*1111111	*1*1111111	0xFF	109

9. Join Accept Message to Joiner from Forwarder

a. Transmission Header (see Appendix G Table LXVIII):

Selection Bits:		
FEC	1	(Yes)
TDC	1	(Yes)
Scrambling	0	(No)
Topology Update ID	y	(Forwarder's current #)
Transmission Queue:		
T-bits	1	(DAP-NAD)
Data Link Precedence	1	(Priority)
First Subscriber Number	zz	

b. Link Layer Header (see Appendix G Table LXV):

Source Address:		
C/R Bit	0	(Command)
Address	25	(Forwarder station 25)
Destination Address:		
Extension Bit	1	(Last one)
Address	1	(Net Entry)
Control Field	3	(UI, ACK not required)

c. Intranet Header (see Appendix G Table LXIV):

Version #	0	(Current Version)
Message Type	6	(XNP)
Header Length	3	(Minimum)
Type of Service	48	(Priority, low delay)

Downloaded from http://www.everyspec.com

d. XNP Message (see Table LV):

Version #	0	(Current Version)
Forwarding Header:		
Message Number	0	(Forwarding Header)
Source Address	2	(Network Controller)
Forwarder Address	25	(Station 25)
Destination Address	1	(Net Entry)
Message Number	21	(Join Accept Message)
Message Length	8	(Join Accept Message Length)
Parameter Update Identifier	1	(ID is 1 for this example)
Station Identifier	1255	[in the least significant 24-bits, Unit Reference Number of joiner]
Link Address	55	[Joiner's assigned link address]

XNP Data Blocks:

Data Block 2	Basic Network Parameters
Data Block 4	Type 3 Network Parameters
Data Block 5	Deterministic NAD Parameters
Data Block 9	Type 2 Parameters
Data Block 12	Intranet Parameters
Data Block 1	Station Identification (Station #1)
Data Block 11	NAD Ranking (Station #1)
•	
•	
•	
Data Block 1	Station Ident. (Last station)
Data Block 11	NAD Ranking (Last station)
Terminator Block	255

10. Hello Message from Joiner

a. Transmission Header (see Appendix G Table LXVIII):

Selection Bits:		
FEC	1	(Yes)
TDC	1	(Yes)
Scrambling	0	(No)
Topology Update ID	0	(Initial)
Transmission Queue:		
T-bits	1	(DAP-NAD)
Data Link Precedence	0	(Urgent)
First Subscriber Number	zz	

Downloaded from http://www.everyspec.com

b. Link Layer Header (see Appendix G Table LXV):

Source Address:		
C/R Bit	0	(Command)
Address	1	(Joiner)
Destination Addresses:		
Extension Bit	0	(More)
Address	25	(Forwarder station 25)
Extension Bit	1	(Last one)
Address	127	(Global Multicast)
Control Field	19	(UI, ACK required)

c. Intranet Header (see Appendix G Table LXIV):

Version #	0	(Current Version)
Message Type	6	(XNP)
Header Length	3	(Minimum)
Type of Service	240	(Network Control, low delay)

d. XNP Message:

Version #	0	(Current Version)
Forwarding Header:		
Message Number	0	(Forwarding Header)
Source Address	1	(Joiner)
Forwarder Address	25	(Station 25)
Destination Address	127	(Global Broadcast)
Message Number	23	(Hello Message)
Message Length	7	(Hello Message Length)
Station Identifier	1255	[in the least significant 24-bits, Unit Reference Number of joiner]
Link Address	55	(Data link address of Joiner)
Terminator Block	255	

Table LVI illustrates the construction of the XNP Hello Message from Joiner.

Downloaded from http://www.everyspec.com

APPENDIX E

TABLE LVI. XNP hello message from joiner.

Field Name	Length (bits)	Value (Dec)	Value (Binary)	Field Fragments	Octet Value (Binary)	Octet Value (Hex)	Octet Number
			MSB LSB 2^n 2^0	MSB LSB 2^n 2^0	MSB LSB 2^n 2^0		
XNP Message							
Version Number	8	0	00000000	00000000	00000000	0x00	0
Forwarding Header							
Message Number	8	0	00000000	00000000	00000000	0x00	1
Source Address	8	1	00000001	00000001	00000001	0x01	2
Forwarder Address	8	25	00011001	00011001	00011001	0x19	3
Destination Address	8	127	01111111	01111111	01111111	0x7F	4
XNP Hello Message							
Message Number	8	23	00010111	00010111	00010111	0x17	5
Message Length	8	7	00000111	00000111	00000111	0x07	6
Station Identifier	32	1255	00000000 00000000 00000100 11100111	00000000 00000000 00000100 11100111	00000000 00000000 00000100 11100111	0x00 0x00 0x04 0xE7	7 8 9 10
Link Address	8	55	00110111	00110111	00110111	0x37	11
Terminator block	8	255	11111111	11111111	11111111	0xFF	12

11. Type 1 Acknowledgment to UI Carrying Hello Message

a. Transmission Header (see Appendix G Table LXVIII):
Selection Bits:

FEC	1	(Yes)
TDC	1	(Yes)
Scrambling	0	(No)
Topology Update ID	y	(Each station's current #)

Downloaded from http://www.everyspec.com

Transmission Queue:

T-bits	1	(DAP-NAD)
Data Link Precedence	0	(Urgent)
First Subscriber Number	zz	(Using old ranking)

b. Link Layer Header (see Appendix G Table LXV):

Source Address:

C/R Bit	1	(Response)
Address	25	(Forwarder station 25)

Destination Address:

Extension Bit	1	(Last one)
Address	xx	(Joiner)
Control Field	51	(URR response)

12. Hello Message from Forwarder

a. Transmission Header (see Appendix G Table LXVIII):

Selection Bits:

FEC	1	(Yes)
TDC	1	(Yes)
Scrambling	0	(No)
Topology Update ID	0	(Initial)

Transmission Queue:

T-bits	1	(DAP-NAD)
Data Link Precedence	0	(Urgent)
First Subscriber Number	zz	

b. Link Layer Header (see Appendix G Table LXV):

Source Address:

C/R Bit	0	(Command)
Address	25	(Forwarder station 25)

Destination Address:

Extension Bit	1	(Last one)
Address	127	(Global Multicast)
Control Field	3	(UI, ACK not required)

Downloaded from http://www.everyspec.com

c. Intranet Header (see Appendix G Table LXIV):

Version #	0	(Current Version)
Message Type	6	(XNP)
Header Length	3	(Minimum, assuming Relaying is not required)
Type of Service	240	(Network Control, low delay)

d. XNP Message:

Version #	0	(Current Version)
Forwarding Header:		
Message Number	0	(Forwarding Header)
Source Address	55	(Joiner)
Forwarder Address	25	(Station 25)
Destination Address	127	(Global Broadcast)
Message Number	23	(Hello Message)
Message Length	7	(Hello Message Length)
Station Identifier	1255	[in the least significant 24-bits, Unit Reference Number of joiner]
Link Address	55	
Terminator Block	255	

Table LVII illustrates the construction of the XNP Hello Message from Forwarder.

TABLE LVII. XNP hello message from forwarder.

Field Name	**Length** (bits)	**Value** (Dec)	**Value** (Binary)	**Field Fragments**	**Octet Value** (Binary)	**Octet Value** (Hex)	**Octet Number**
			MSB 2^n LSB 2^0	MSB 2^n LSB 2^0	MSB 2^n LSB 2^0		
XNP Message							
Version Number	8	0	*0*0000000	*0*0000000	*0*0000000	0x00	0
Forwarding Header							
Message Number	8	0	*0*0000000	*0*0000000	*0*0000000	0x00	1
Source Address	8	55	*0*0110111	*0*0110111	*0*0110111	0x37	2
Forwarder Address	8	25	*0*0011001	*0*0011001	*0*0011001	0x19	3
Destination Address	8	127	*0*1111111	*0*1111111	*0*1111111	0x7F	4

Downloaded from http://www.everyspec.com

APPENDIX E

TABLE LVII. XNP hello message from forwarder - Continued.

Field Name	**Length** (bits)	**Value** (Dec)	**Value** (Binary)	**Field Fragments**	**Octet Value** (Binary)	**Octet Value** (Hex)	**Octet Number**
			MSB LSB 2^n 2^0	**MSB LSB** 2^n 2^0	**MSB LSB** 2^n 2^0		
XNP Hello Message							
Message Number	8	23	*0*0010111	*0*0010111	*0*0010111	0x17	5
Message Length	8	7	*0*0000111	*0*0000111	*0*0000111	0x07	6
Station Identifier	32	1255	*0*0000000 00000000 00000100 11100111	*0*0000000 00000000 00000100 11100111	*0*0000000 00000000 00000100 11100111	0x00 0x00 0x04 0xE7	7 8 9 10
Link Address	8	55	*0*0110111	*0*0110111	*0*0110111	0x37	11
Terminator block	8	255	*1*1111111	*1*1111111	*1*1111111	0xFF	12

E.6.4.3 This paragraph and all of its subparagraphs were intentionally deleted.

Downloaded from http://www.everyspec.com

APPENDIX F

GOLAY CODING ALGORITHM

F.1 General.

F.1.1 Scope. This appendix contains amplifying information in support of MIL-STD-188-220.

F.1.2 Application. This appendix is not a mandatory part of MIL-STD-188-220. The information contained herein is intended for guidance only.

F.2. Applicable documents. None.

F.3 Forward error correction. The FEC method requires the receiver to detect and automatically correct errors in a received block of information. The number of errors the receiver can detect and correct depends on the coding method. The information bits (k) are separated into blocks that contain both information bits and code bits. The length of the block, including the information and code bits, is (n). The code is described as (n, k), where n is the length of the block and k is the number of information bits in the block.

F.4 Golay code. The Golay code is a linear, block, perfect, and cyclic (23,12) code capable of correcting any combination of three or fewer errors in a block of 23 digits. The generator polynomial for this code is

$$g(x) = x^{11} + x^{10} + x^{6} + x^{5} + x^{4} + x^{2} + 1$$

where g(x) is a factor of $x^{23} + 1$

F.4.1 Half-rate Golay code. The half-rate Golay code (24,12) is formed by adding a fill bit to the Golay (23, 12) code. The fill bit is not checked on reception. The (24,12) code is preferable to the (23,-12) because it has a code rate of exactly one-half. This code rate simplifies system timing.

F.4.2 Golay code implementation. The Golay code may be implemented in either hardware or software. The hardware implementation uses shift-registers for encoding and decoding, as described in F.4.2.1 and F.4.2.2, respectively. The software implementation uses a generator matrix and conversion table, as described in F.4.2.3.

F.4.2.1 Hardware implementation. Golay code encoding can be performed with an 11-stage feedback shift register with feedback connections selected according to the coefficients of g(x). A shift register corresponding to the coefficients of g(x) is shown in Figure 46. The k information bits are located at the beginning of the n symbol block code. With the gate open, the information bits are loaded into the shift register stages and simultaneously into the output channel. At this

Downloaded from http://www.everyspec.com

time the shift register contains the check symbols. With the gate closed, register contents are then shifted onto the output channel. The last n - k symbols are the check symbols that form the whole codeword.

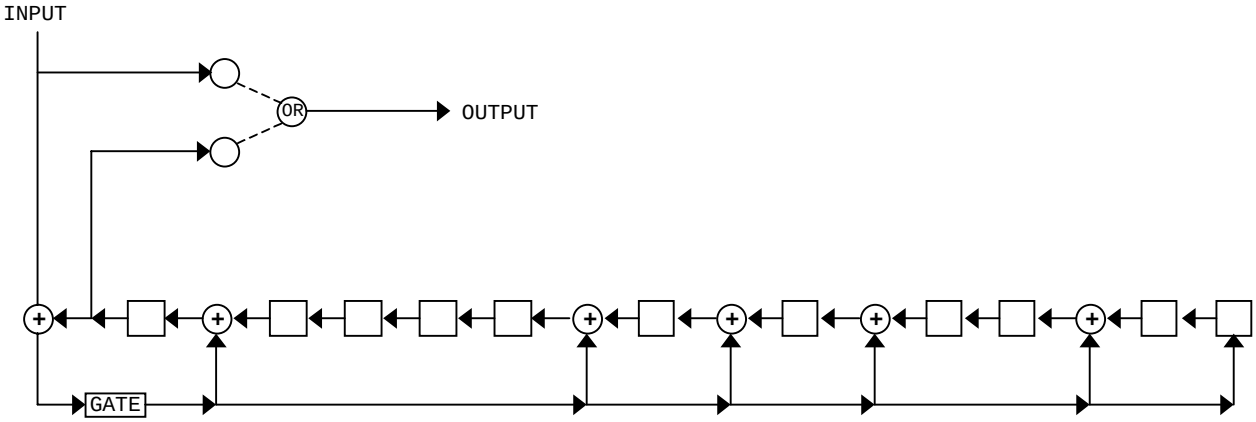

Encoder for $g(x) = 1 + x^2 + x^4 + x^5 + x^6 + x^{10} + x^{11}$

FIGURE 46. Shift register encoding for the (23, 12) Golay code.

F.4.2.2 Hardware decoding. The Golay code is decoded using a number of techniques such as the error-trapping process developed by T. Kasami. The Kasami error-trapping decoder for the Golay code is shown in Figure 47. It works as follows:

a. Gates 1, 3, and 5 are opened, and gates 2 and 4 are closed. The received codeword r(x) is then shifted into both the 23-stage shift register and the syndrome register. At the same time, the previously corrected codeword is shifted out to the user. The syndrome

$$S(x) = S_0 + S_1x + \ldots + S_{10}x^{10}$$

is then formed and subjected to threshold tests.

Downloaded from http://www.everyspec.com

APPENDIX F

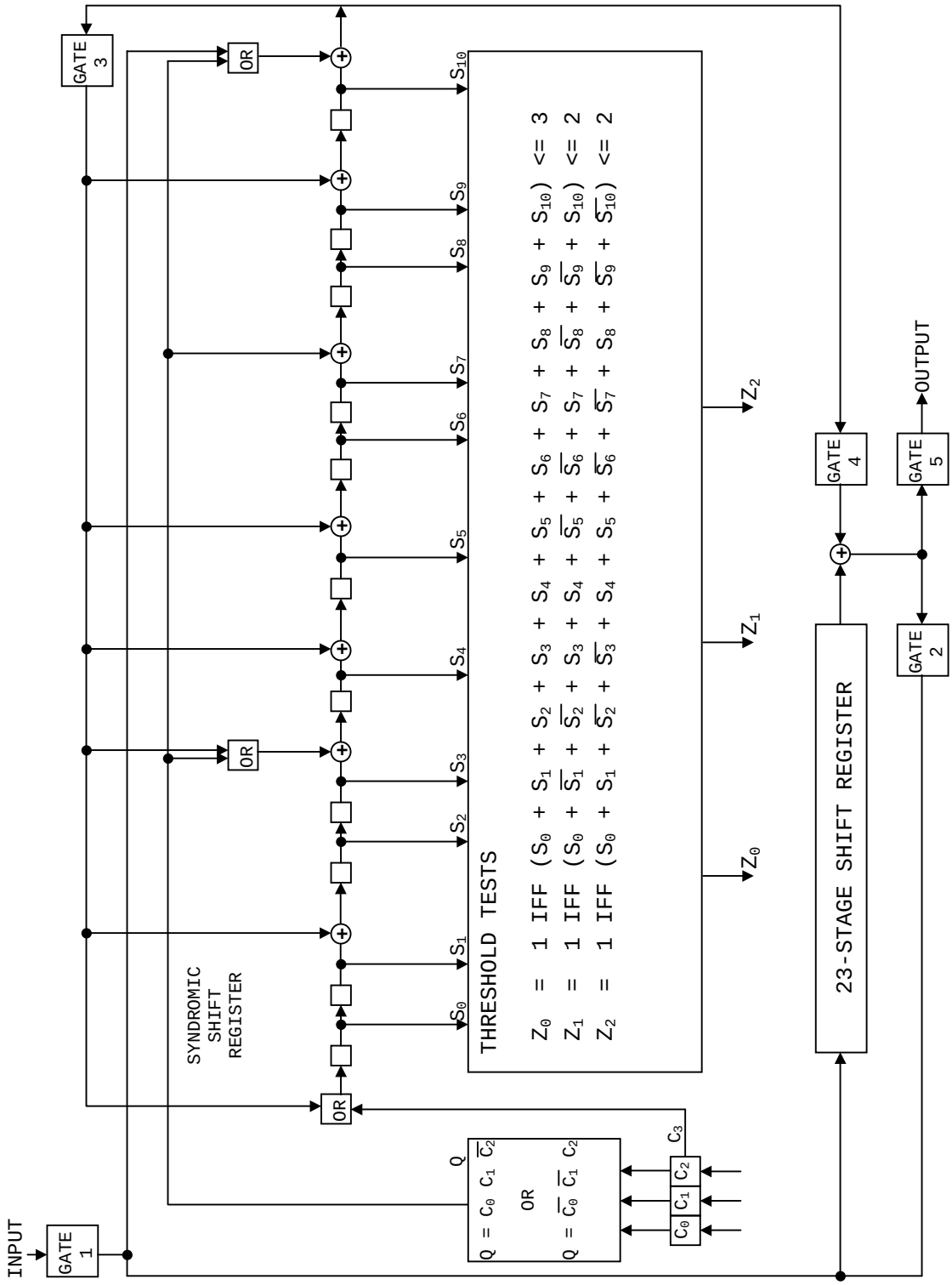

FIGURE 47. Kasami error-trapping decoder for the (24, 12) Golay code.

Downloaded from http://www.everyspec.com

b. Gates 1, 4, and 5 are closed and gate 2 is opened. Gate 3 remains open. The threshold tests occur in the following order:

1. If Z_0 is unity, then all the errors are confined to the 11 high-order positions of r(x), and S(x) matches the errors. Z_0 opens gate 4 and closes gate 3. Contents of both the 23-stage shift register and the syndrome shift register are then shifted 11 times, and the errors are corrected. Then gate 4 is closed and the contents of the 23-stage shift register are shifted until the received codeword is in its original position. The decoder then goes to step 3 below.

2. If Z_1 is unity, the error pattern in S(x) is the same as the errors in the 11 high-order bits of the codeword r(x), and a single error exists at location x^5. Gate 4 is opened and gate 3 is closed. The counter is preloaded with a count of 2, and both the syndrome shift register and the 23-stage shift register are shifted until the error in x^5 is corrected. Then gate 4 is closed, and the contents of the 23-stage shift register are shifted until the received codeword is in its original position. The decoder then goes to step 3.

3. If Z_2 is unity, the error pattern in S(x) is the same as the errors in the 11 high-order bits of the codeword r(x), and there is a single error in location x^6. The same steps are followed as in b (above) except that the counter is preloaded with a count of 3. The decoder then goes to step 3.

4. If neither of the three thresholds is unity, the decoder goes directly to step 3.

c. Gates 1, 4, and 5 are closed, and gates 2 and 3 are opened. Contents of both the 23-stage shift register and the syndrome shift register are then shifted once to the right. The decoder then goes to step 2.

d. This action continues until step 3 has been executed 46 times. Then the decoder returns to step 1 to process the next received codeword.

The decoder always yields an output. The output is correct if there were 3 or fewer errors in the received codeword, and erroneous if there were more than 3 errors in the codeword.

Downloaded from http://www.everyspec.com

APPENDIX F

F.4.2.3 Software implementation. The transmitting DMTD shall generate the check bits using the following generator polynomial:

$$g(x)= x^{11} + x^{10} + x^{6} + x^{5} + x^{4} + x^{2} + 1$$

Note that using modulo 2 addition,

$$x^{23}+1=(x^{11}+x^{10}+x^{6}+x^{5}+x^{4}+x^{2}+1)(x^{11}+x^{9}+x^{7}+x^{6}+x^{5}+x+1)(x+1)$$

The 11 check bits shall be as derived from the generator matrix G, shown in Figure 48, where the matrix contains the coefficients of the polynomials on the left.

	$^{2}2$	$^{2}1$	$^{2}0$	$^{1}9$	$^{1}8$	$^{1}7$	$^{1}6$	$^{1}5$	$^{1}4$	$^{1}3$	$^{1}2$	$^{1}1$	0	9	8	7	6	5	4	3	2	1	0	
	X																						X	
$x^{11} * g(x) =$	1	1	0	0	0	1	1	1	0	1	0	1	0	0	0	0	0	0	0	0	0	0	0	
$x^{10} * g(x) =$	0	1	1	0	0	0	1	1	1	0	1	0	1	0	0	0	0	0	0	0	0	0	0	
$x^{9} * g(x) + x^{11} * g(x) =$	1	1	1	1	0	1	1	0	1	0	0	0	0	1	0	0	0	0	0	0	0	0	0	
$x^{8} * g(x) + x^{10} * g(x) =$	0	1	1	1	1	0	1	1	0	1	0	0	0	0	1	0	0	0	0	0	0	0	0	
$x^{7} * g(x) + x^{9} * g(x) =$	0	0	1	1	1	1	0	1	1	0	1	0	0	0	0	1	0	0	0	0	0	0	0	
$(x^{6} + x^{8} + x^{11}) * g(x) =$	1	1	0	1	1	0	0	1	1	0	0	0	0	0	0	0	1	0	0	0	0	0	0	= G
$(x^{5} + x^{7} + x^{10}) * g(x) =$	0	1	1	0	1	1	0	0	1	1	0	0	0	0	0	0	0	1	0	0	0	0	0	
$(x^{4} + x^{6} + x^{9}) * g(x) =$	0	0	1	1	0	1	1	0	0	1	1	0	0	0	0	0	0	0	1	0	0	0	0	
$(x^{3} + x^{5} + x^{8} + x^{11}) * g(x) =$	1	1	0	1	1	1	0	0	0	1	1	0	0	0	0	0	0	0	0	1	0	0	0	
$(x^{2} + x^{4} + x^{7} + x^{10} + x^{11}) * g(x) =$	1	0	1	0	1	0	0	1	0	1	1	0	0	0	0	0	0	0	0	0	1	0	0	
$(x + x^{3} + x^{6} + x^{9} + x^{10} + x^{11}) * g(x) =$	1	0	0	1	0	0	1	1	1	1	1	0	0	0	0	0	0	0	0	0	0	1	0	
$(1 + x^{2} + x^{5} + x^{8} + x^{9} + x^{10} + x^{11}) * g(x) =$	1	0	0	0	1	1	1	0	1	0	1	0	0	0	0	0	0	0	0	0	0	0	1	
	Parity												Identity											

FIGURE 48. Generator matrix G.

By interchanging the I and P columns to obtain matrix T, shown in Figure 49, that is,

$$G=[P,I]_{(12\ x\ 23)} = >[I,P]_{(12\ x\ 23)} = T$$

Downloaded from http://www.everyspec.com

the transmission order and value of the code word bits can be obtained by matrix multiplication (modulo 2 addition without carry) as follows:

$$\underset{\text{FIRST BIT TRANSMITTED}}{\left[\mathrm{Ib}_1 \ \text{INFO BITS} \ \mathrm{Ib}_{12}\right]}_{(1\text{x}12)} * \left[\mathrm{I,P}\right]_{(12\text{x}23)} = \underset{\text{FIRST BIT TRANSMITTED}}{\left[\text{INFO BITS, CHECK BITS}\right]}_{(1\text{x}23)}$$

$$\mathbf{T} = \left[\begin{array}{cccccccccccccccccccccc}
1 & 0 & 0 & 0 & 0 & 0 & 0 & 0 & 0 & 0 & 0 & 0 & 1 & 1 & 0 & 0 & 0 & 1 & 1 & 1 & 0 & 1 & 0 \\
0 & 1 & 0 & 0 & 0 & 0 & 0 & 0 & 0 & 0 & 0 & 0 & 0 & 1 & 1 & 0 & 0 & 0 & 1 & 1 & 1 & 0 & 1 \\
0 & 0 & 1 & 0 & 0 & 0 & 0 & 0 & 0 & 0 & 0 & 0 & 1 & 1 & 1 & 1 & 0 & 1 & 1 & 0 & 1 & 0 & 0 \\
0 & 0 & 0 & 1 & 0 & 0 & 0 & 0 & 0 & 0 & 0 & 0 & 0 & 1 & 1 & 1 & 1 & 0 & 1 & 1 & 0 & 1 & 0 \\
0 & 0 & 0 & 0 & 1 & 0 & 0 & 0 & 0 & 0 & 0 & 0 & 0 & 0 & 1 & 1 & 1 & 1 & 0 & 1 & 1 & 0 & 1 \\
0 & 0 & 0 & 0 & 0 & 1 & 0 & 0 & 0 & 0 & 0 & 0 & 1 & 1 & 0 & 1 & 1 & 0 & 0 & 1 & 1 & 0 & 0 \\
0 & 0 & 0 & 0 & 0 & 0 & 1 & 0 & 0 & 0 & 0 & 0 & 0 & 1 & 1 & 0 & 1 & 1 & 0 & 0 & 1 & 1 & 0 \\
0 & 0 & 0 & 0 & 0 & 0 & 0 & 1 & 0 & 0 & 0 & 0 & 0 & 0 & 1 & 1 & 0 & 1 & 1 & 0 & 0 & 1 & 1 \\
0 & 0 & 0 & 0 & 0 & 0 & 0 & 0 & 1 & 0 & 0 & 0 & 1 & 1 & 0 & 1 & 1 & 1 & 0 & 0 & 0 & 1 & 1 \\
0 & 0 & 0 & 0 & 0 & 0 & 0 & 0 & 0 & 1 & 0 & 0 & 1 & 0 & 1 & 0 & 1 & 0 & 0 & 1 & 0 & 1 & 1 \\
0 & 0 & 0 & 0 & 0 & 0 & 0 & 0 & 0 & 0 & 1 & 0 & 1 & 0 & 0 & 1 & 0 & 0 & 1 & 1 & 1 & 1 & 1 \\
0 & 0 & 0 & 0 & 0 & 0 & 0 & 0 & 0 & 0 & 0 & 1 & 1 & 0 & 0 & 0 & 1 & 1 & 1 & 0 & 1 & 0 & 1
\end{array}\right]$$

I **P**

FIGURE 49. Matrix T.

Downloaded from http://www.everyspec.com

APPENDIX G

PACKET CONSTRUCTION AND BIT ORDERING

G.1 General.

G.1.1 Scope. This appendix illustrates the construction of packets starting with the Application Layer Protocol Data Unit (PDU) and VMF Message data buffers and ending with the data link bit order of transmission and physical layer PDU. However this example excludes the S/R protocol. The focus of this example is to show correct formatting of the 188-220 subnetwork.

G.1.2 Application. This appendix is a mandatory part of this document. The bit ordering defined herein shall be utilized by all implementers.

G.2 Applicable Documents.

a. RFC 768: User Datagram Protocol

b. RFC 791: Internet Protocol -- DARPA Internet Program Protocol Specification

c. MIL-STD-2045-47001B: Interoperability Standard for Connectionless Data Transfer -- Application Standard, dated 20 January 1998

d. Joint Interoperability of Tactical Command and Control Systems, Variable Message Format Technical Interface Design Plan (Test Edition), Reissue 4, dated 7 July 2000

G.3 PDU construction. This section provides examples illustrating the construction and bit ordering of a VMF message through the Application Layer, the Transport Layer, the Network Layer, Link Layer and Physical Layer. For clarity, each layer will be discussed separately and then combined for actual transmission. The same representations will be utilized for each layer:

- the MSB (2^n bit) is represented with an italicized font and
- the LSB (2^0 bit) is shown to the RIGHT in the Value (binary) column.

This representation is carried into the other columns to identify the beginning and end of each of the fields as the bits are moved into individual octets. Note that the bit markings for MSB and LSB are on a field basis, not on an octet basis. Single bit fields are treated as LSB. In addition, since some layers (e.g. transport) are based on commercial standards, the representation from the appropriate RFC will also be included. In all cases, we will start with a figure which illustrates the interaction with upper/lower communication layers, followed by a figure showing the exchange between communication layers. There will be a table showing the construction of the

Downloaded from http://www.everyspec.com

PDU. This will be followed by a table showing the construction of each octet and a figure showing the serial representation of this particular PDU as it would appear at physical layer.

Each layer typically adds value and its own header to an outgoing message. This process is illustrated in Figure 50.

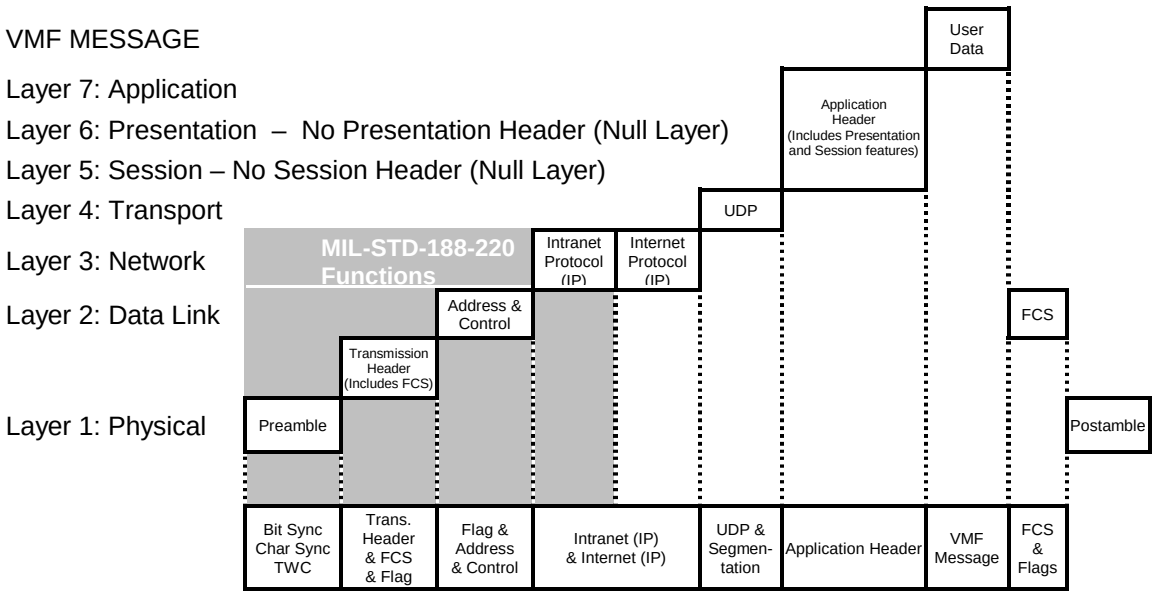

FIGURE 50. PDU construction.

An application header is added to the VMF message at application layer. For this protocol, layers 5 and 6 are null layers, and no processing or headers are present. The Application Layer handles these functions. The transport layer adds its header. Although the standard calls out TCP, UDP and segmentation/reassembly, only UDP is illustrated in this appendix. Next, the network layer adds the IP header and the Intranet header. The message is now passed to the data link layer which adds both a header and a trailer. Finally, the physical layer adds its header resulting in the final PDU for transmission. Note that this example does not include TCP, segmentation & reassembly, or COMSEC.

G.3.1 VMF message data exchange. The relationship of the VMF Messaging Services to other communication layers is shown in Figure 51. A layered communication model is used in this example for consistency with the principles of the ISO OSI reference model. The model discussed here is tailored to focus attention specifically on VMF Messaging Services, and the data it produces. A user of VMF Messaging Services exchanges Message Content with its peer at

Downloaded from http://www.everyspec.com

another node by sending and receiving the Message Content via the VMF Messaging Services. VMF Messaging Services sends and receives the Message Content by converting the Message Content to Message Data and exchanging the Message Data with its peer at another node. The VMF Message Data is sent and received via lower communication layers. The lower communication layers send and receive the VMF Message Data transparently over a variety of communications media. Note that VMF Messaging Services would ordinarily use Application Layer services from the lower communication layers to send and receive Message Data. The Message Data would then appear in the Application Layer PDU's VMF message.

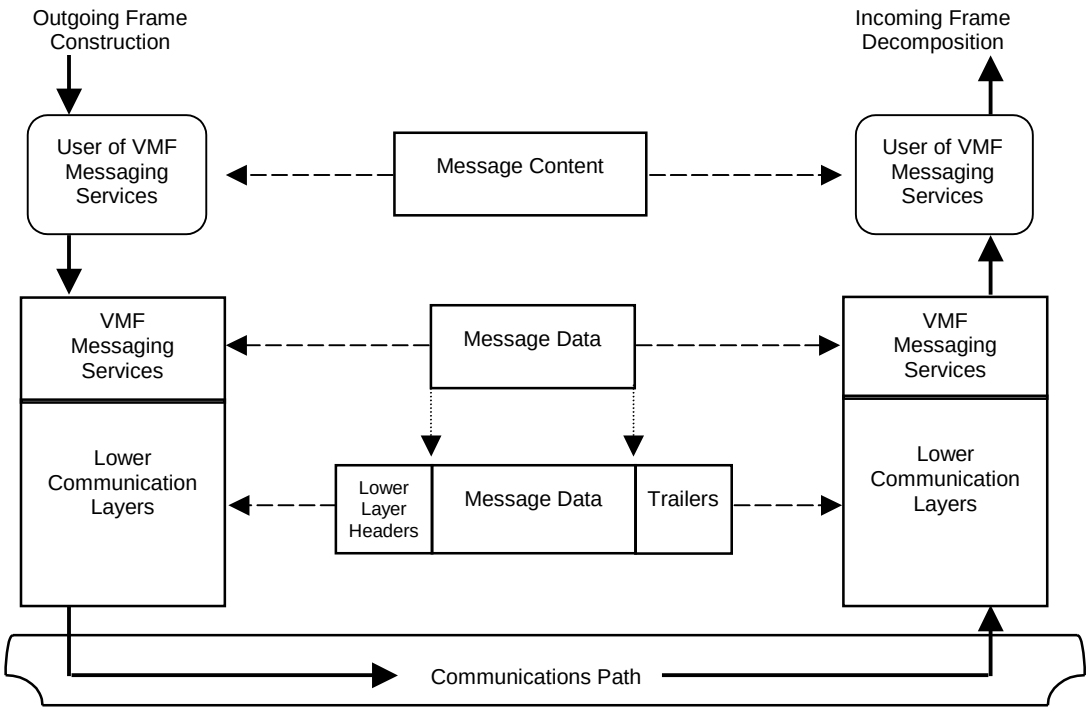

FIGURE 51. VMF message services interaction with other communication layers.

The format of the Message Data is defined in terms of the actual data buffer or data stream used to exchange the Message Data between the VMF Messaging Services and the lower communication layers. The rationale for using the Message Data's data buffer/stream to define the format is: 1) for consistency with industry standard commercial communications hardware and software (e.g., UNIX implementations of TCP/IP), which exchange data with other software when sending or receiving as a buffer or stream of octets; 2) to provide a definition independent of the specifics of any other communication layer, consistent with the OSI ISO model principle of

Downloaded from http://www.everyspec.com

making communication layers independent; and 3) to avoid differences in the bit representations used to implement communications on different media. For example, on Ethernet LAN media each octet is sent LSB first, but on FDDI media each octet is sent MSB first. To achieve a universal definition of the Message Data format, its representation is defined independent of the other communication layers. The relationship of the Message Data's data buffer/stream to the VMF Messaging Services is depicted in Figure 52.

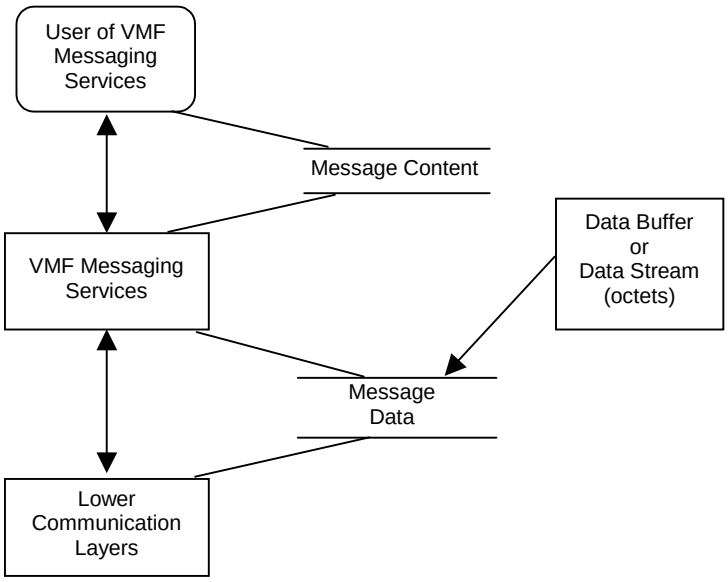

FIGURE 52. Exchange of message data between communication layers.

G.3.1.1 Example of VMF message data construction. The construction of VMF Message Data is illustrated by the example in Table LVIII. The first four columns of the table provide a description of each field in the example, the field length in bits, and the value of the field in both decimal (Dec) and binary representations. The last three columns show the physical encoding of the VMF Message Data. In the fifth column, Field Fragments, the bits of each field are placed in octets. The bit(s) of each field are positioned in an octet such that the LSB of the field is positioned in the least significant unencoded bit of the octet, the next LSB of the field is placed in the next least significant unencoded bit of the octet, and repeated until all of the bits of the field have been encoded. When an octet is filled before all the bits of a field are encoded, the process is continued encoding the next octet with the remaining bits of the field. This field/octet encoding procedure is performed starting with the first field and octet, and repeated for each successive field and individual octet, in order, until the encoding is completed. When a field has groups, the field encoding procedure is performed starting with the first group, and repeated for each

Downloaded from http://www.everyspec.com

successive group and individual octet, in order, until the encoding of the field is completed. The Target Number field illustrates the encoding of a field with groups. Note the LSB of a field or octet is defined as the bit having the weight of 2^0 when the field or octet is represented as a numeric value. X's are used to identify bits that are not associated with the field being encoded. The sixth column, Octet Value - Binary, assembles the bits contributed by successive fields into complete octets, represented in binary. The seventh column, Octet Value – Hex, represents the octet value in hexadecimal (Hex). The last column, Octet Number, numbers the octets from first to last starting with 0.

When all fields have been encoded, any remaining unencoded bits in the last octet are filled with zeroes (zero padded). Each VMF Message is individually encoded and zero padded. This example is a K02.1 (Check Fire) message, Case 1.1 (Check Fire by Target Number), from the VMF TIDP-TE, Reissue 4, dated 7 July 2000.

TABLE LVIII. Example of VMF message data construction.

Field Name	**Length (bits)**	**Value (Dec)**	**Value (Binary)**	**Field Fragments**	**Octet Value (Binary)**	**Octet Value (Hex)**	**Octet Number**
			MSB **LSB** ***2^n*** **2^0**	**MSB LSB** **2^7 2^0**	**MSB LSB** **2^7 2^0**		
Check Fire Type	3	0	*0*00	xxxxx*0*00			
Check Fire/Cancel Check Fire Command	3	1	*0*01	xx*0*01xxx			
FPI	1	1	1	x1xxxxxx			
Target Number							
Group 1	7	65 (A)	*1*000001	1xxxxxxx xx*1*00000	11*0*01*0*0	C8	0
Group 2	7	66 (B)	*1*000010	10xxxxxx xxx*1*0000	10*1*00000	A0	1

Downloaded from http://www.everyspec.com

APPENDIX G

TABLE LVIII. Example of VMF message data construction - Continued.

Field Name	Length (bits)	Value (Dec)	Value (Binary)	Field Fragments	Octet Value (Binary)	Octet Value (Hex)	Octet Number
			MSB ***LSB*** ***2^n*** ***2^0***	**MSB** **LSB** **2^7** **2^0**	**MSB** **LSB** **2^7** **2^0**		
Group 3	14	1543	*0*0011000000111	111xxxxx 11000000 xxxxx*0*00	111*1*0000 11000000	F0 C0	2 3
FPI (Observer ID)	1	0	0	xxxx0xxx			
URN (Observer ID)	24	NA					
GPI (Effective Time)	1	0	0	xxx0xxxx			
Effective Hour	5	NA					
Effective Minute	6	NA					
Effective Second	6	NA					
FPI	1	NA					
Launcher Message Sequencing Number	7	NA					
GPI (Entity ID Reference Group)	1	0	0	xx0xxxxx			
URN (Entity ID)	24	NA					
Entity ID Serial Number	32	NA					
Day of Month	5	NA					
Hour	5	NA					
Minute	6	NA					
Second	6	NA					
(Zero Padding)	2	0	0	00xxxxxx	00000*00*0	00	4

Figure 53 illustrates the octets arranged in a serial format as they would appear at the physical layer, with LSB first.

Octet 0	**Octet 1**	**Octet 2**	**Octet 3**	**Octet 4**
2^0 2^7	2^0 2^7	2^0 2^7	2^0 2^7	2^0 2^7
00*0*10*0*11	00000*1*01	0000*1*111	00000011	00*0*000*0*0

FIGURE 53. Serial representation of PDU.

Downloaded from http://www.everyspec.com

G.3.2 Application Layer Data Exchange. The relationship of the Application Layer to other communication layers is shown in Figure 54. A layered communication model is used in this example for consistency with the principles of the ISO OSI reference model. The model discussed here is tailored to focus attention specifically on the Application Layer, and the data it produces. A user of the Application Layer exchanges a VMF message with its peer at another node by sending and receiving the VMF message via the Application Layer. The Application Layer sends and receives the VMF message transparently by producing and exchanging an Application Layer Protocol Data Unit (PDU) with its peer at another node. The Application Layer PDU consists of the Application Header concatenated with the VMF message, and is sent and received via lower communication layers. The lower communication layers send and receive the VMF message transparently over a variety of communications media.

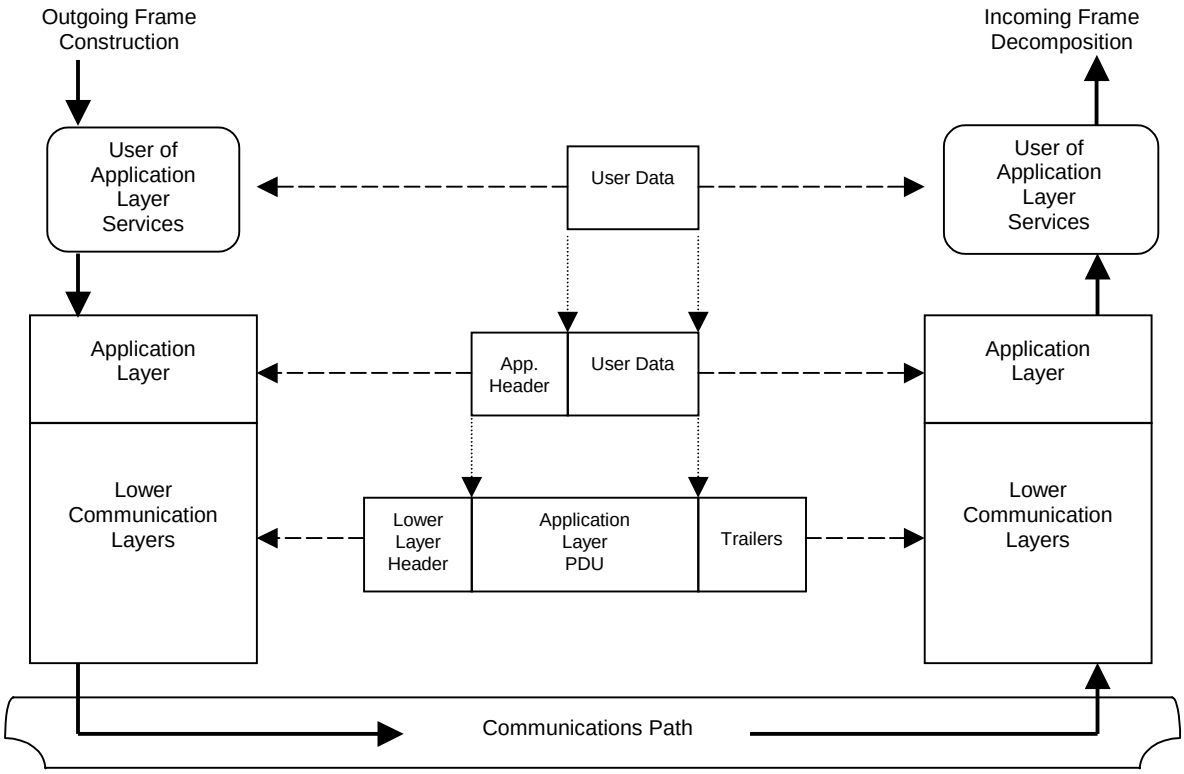

FIGURE 54. Application layer interaction with other communication layers.

The format of the Application Layer PDU is defined in terms of the actual data buffer or data stream used to exchange the PDU between the Application Layer and the lower communication layers. The rationale for using the PDU's data buffer/stream to define the format is 1) for

Downloaded from http://www.everyspec.com

consistency with industry standard commercial communications hardware and software (e.g., UNIX implementations of TCP/IP), which exchange data with other software when sending or receiving as a buffer or stream of octets; 2) to provide a definition independent of the specifics of any other communication layer, consistent with the OSI ISO model principle of making communication layers independent; and 3) to avoid differences in the bit representations used to implement communications on different media. For example, on Ethernet LAN media each octet is sent LSB first, but on FDDI media each octet is sent MSB first. To achieve a universal definition of the PDU format, its representation is defined independent of the other communication layers. The relationship of the Application Layer PDU's data buffer/stream to the Application Layer is depicted in Figure 55.

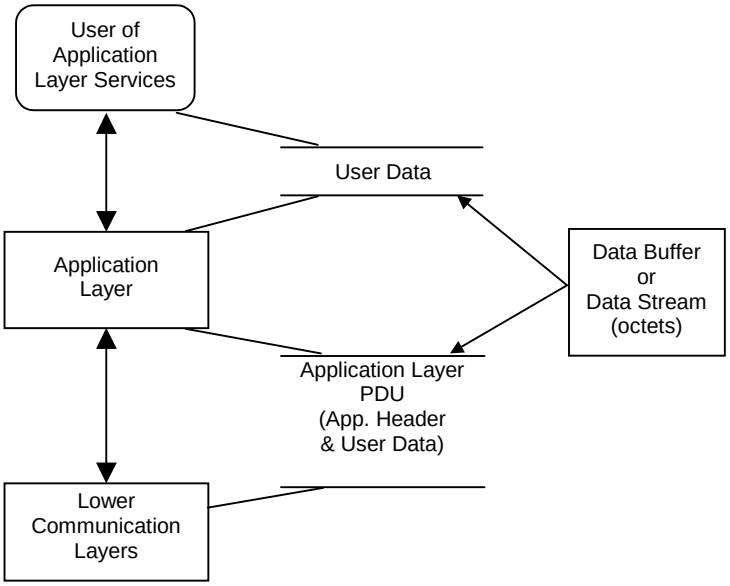

FIGURE 55. Exchange of application layer PDU between communication layers.

G.3.2.1 Example of application layer PDU. The construction of an Application Layer PDU is illustrated by the example in Table LIX. The first four columns of the table provide a description of each field in the example, the field length in bits, and the value of the field in both Dec and binary representations. The last four columns show the physical encoding of the Application Layer PDU. In the fifth column, Field Fragments, the bits of each field are placed in octets. The bit(s) of each field are positioned in an octet such that the LSB of the field is positioned in the least significant unencoded bit of the octet, the next LSB of the field is placed in the next least significant unencoded bit of the octet, and repeated until all of the bits of the field have been encoded. When an octet is filled before all the bits of a field are encoded, the process is continued

Downloaded from http://www.everyspec.com

encoding the next octet with the remaining bits of the field. This field/octet encoding procedure is performed starting with the first field and octet, and repeated for each successive field and individual octet, in order, until the encoding is completed. When a field has groups, the field encoding procedure is performed starting with the first group, and repeated for each successive group and individual octet, in order, until the encoding of the field is completed. The URN field illustrates the encoding of a field with groups. Note the LSB of a field or octet is defined as the bit having the weight of 2^0 when the field or octet is represented as a numeric value. X's are used to identify bits that are not associated with the field being encoded. The sixth column, Octet Value - Binary, assembles the bits contributed by successive fields into complete octets, represented in binary. The seventh column, Octet Value, represents the octet value in binary that should be submitted to the Transport layer. The last column, Octet Number, numbers the octets from first to last starting with 0.

When all fields have been encoded, any remaining unencoded bits in the last octet are filled with zeroes (zero padded). The Application Header is individually encoded and zero padded. The VMF message is individually encoded and zero padded before it is passed to the Application Layer to have the Application Header added.

Downloaded from http://www.everyspec.com

APPENDIX G

TABLE LIX. Example construction of the application header.

Syntax	Field Name	Length (bits)	Value (Dec)	Value (Binary)	Field Fragments	Octet Value (Binary)	Octet Number
				MSB **LSB** 2^n 2^0	**MSB** **LSB** 2^n 2^0	**MSB** **LSB** 2^n 2^0	
	Version	4	1	*0*001	xxxx*0*001		
FPI	Compression Type	1	0	0	xxx0xxxx		
GPI	Presence Indicator (Originator)	1	1	1	xx1xxxxx		
FPI	Presence Indicator (URN)	1	1	1	x1xxxxxx		
	URN (Originator)	24	23	*0*00000000000000000010111	1xxxxxxx 00001011 00000000 x*0*000000	11100001 00001011 00000000	0 1 2
FPI	Presence Indicator (Unit Name)	1	0	0	0xxxxxxx	0*0*000000	3
GPI	Presence Indicator (Recipient)	1	1	1	xxxxxxx1		
GRI	Group Repeat Indicator (Recipient)	1	0	0	xxxxxx0x		
FPI	Presence Indicator (URN)	1	1	1	xxxxx1xx		
	URN (Recipient URN)	24	124	*0*00000000000000001111100	11100xxx 00000011 00000000 xxxxx*0*00	11100101 00000011 00000000	4 5 6

Downloaded from http://www.everyspec.com

TABLE LIX. Example construction of the application header - Continued.

Syntax	Field Name	Length (bits)	Value (Dec)	Value (Binary)	Field Fragments	Octet Value (Binary)	Octet Number
				MSB 2^n **LSB** 2^0	**MSB** 2^n **LSB** 2^0	**MSB** 2^n **LSB** 2^0	
FPI	Presence Indicator (Unit Name)	1	0	0	xxxx0xxx		
GPI	Group Presence Indicator (Information)	1	0	0	xxx0xxxx		
GRI	Group Repeat Indicator (Message)	1	0	0	xx0xxxxx		
	User Message Format	4	2	*0*010	10x*xxxxx* xxxxxx*00*	10000*000*	7
GPI	Group Presence Indicator (Message Identification)	1	1	1	xxxxx1xx		
	Functional Area Designator	4	2	*0*010	x*0*010xxx		
	Message Number	7	1	*0*000001	1xxxxxxx xx*000*000	1*0*010*10*	8
FPI	Presence Indicator (Message Subtype #)	1	0	0	x0xxxxxx		
FPI	Presence Indicator (File Name)	1	0	0	0xxxxxxx	00*000*000	9
FPI	Presence Indicator (Message Size)	1	0	0	xxxxxxx0		
	Operation Indicator	2	0	*0*0	*x*xxxx*0*0x		
	Retransmit Indicator	1	0	0	xxxx0xxx		
	Message Precedence Code	3	7	*1*11	x*1*11xxxx		

Downloaded from http://www.everyspec.com

APPENDIX G

TABLE LIX. Example construction of the application header - Continued.

Syntax	Field Name	Length (bits)	Value (Dec)	Value (Binary)	Field Fragments	Octet Value (Binary)	Octet Number
				MSB 2^n LSB 2^0	MSB 2^n LSB 2^0	MSB 2^n LSB 2^0	
	Security Classification	2	0	*00*	0xxxxxxx xxxxxxx*0*	0*1*110*00*0	10
FPI	FPI for Control/Release Marking	1	0	0	xxxxxx0x		
GPI	GPI for Originator DTG	1	1	1	xxxxx1xx		
	Year	7	96	*1*100000	00000xxx xxxxxx*1*1	00000*1*0*0*	11
	Month	4	7	*0*111	xx*0*111xx		
	Day	5	1	*0*0001	01xxxxxx xxxxx*0*00	01*0*111*1*1	12
	Hour	5	8	*0*1000	*0*1000xxx	*0*1000*0*0	13
	Minute	6	32	*1*00000	xx*1*00000		
	Second	6	16	*0*10000	00xxxxxx xxxx*0*100	00*1*00000	14
FPI	DTG Extension	1	0	0	xxx0xxxx		
GPI	GPI for Perishability DTG	1	0	0	xx0xxxxx		
GPI	GPI for ACK Request Group	1	0	0	x0xxxxxx		
GPI	GPI for Response Data Group	1	0	0	0xxxxxxx	00000*1*00	15
GPI	GPI for Reference Message Data	1	0	0	xxxxxxx0		
	(Zero Padding)	7	0	*0*000000	*0*000000x	*0*0000000	16

The Application Header is followed by the VMF message. The VMF message is shown as a single 10-octet message to complete the Application Layer PDU. Figure 56 provides an illustration of the Application Header, as it would appear in serial form at the lower layers.

Downloaded from http://www.everyspec.com

APPENDIX G

Octet 0	Octet 1	Octet 2	Octet 11	Octet 12	Octet 13	Octet 14	Octet 15	Octet 16
2^0 2^7	2^0 2^7	2^0 2^7	2^0 2^7	2^0 2^7	2^0 2^7	2^0 2^7	2^0 2^7	2^0 2^7
100*0*0111	11010000	00000000	*0*0100000	1*1*111*0*10	00*0*000*1*0	00000*1*00	001*0*0000	00000000

FIGURE 56. Application header (octets).

Any of the ASCII fields (e.g. Unit Name) in the application header can be terminated by either an end of text marker, or by using the maximum number of bits. Table LX shows how to format the Unit Name when the Unit Name is used as part of the originator address group. The Unit Name and URN are mutually exclusive inside the address group – never send both, Unit Name and URN, in an address group. However if the address group has a Group Repeat Indicator (GRI) each of the repeatable address groups can be different address types (e.g. Unit Name or URN).

TABLE LX. Example of a unit name as originator.

Syntax	Field Name	Length (bits)	Value (Dec)	Value (Binary)	Field Fragments	Octet Value (Binary)	Octet Number
				MSB 2^n LSB 2^0	MSB 2^n LSB 2^0	MSB 2^n LSB 2^0	
	Version	4	1	*0*001	xxxx*0*001		
FPI	Compression Type	1	0	0	xxx0xxxx		
GPI	Presence Indicator (Originator)	1	1	1	xx1xxxxx		
FPI	Presence Indicator (URN)	1	0	0	x0xxxxxx		
FPI	Presence Indicator (Unit Name)	1	1	1	1xxxxxxx	10000000	0
	Unit Name (Originator)	448 Max	"UNITA"				
	"U"	7	85	*1*010101	x*1*010101		
	"N"	7	78	*1*001110	0xxxxxxx xx*1*00111	0*1*010101	1
	"I"	7	73	*1*001001	01xxxxxx xxx*1*0010	01*1*00111	2
	"T"	7	84	*1*010100	100xxxxx xxxx*1*010	100*1*0010	3

Downloaded from http://www.everyspec.com

APPENDIX G

TABLE LX. Example of a unit name as originator - Continued.

Syntax	Field Name	Length (bits)	Value (Dec)	Value (Binary)	Field Fragments	Octet Value (Binary)	Octet Number
				MSB **LSB** 2^n 2^0	**MSB** **LSB** 2^n 2^0	**MSB** **LSB** 2^n 2^0	
	"A"	7	65	*1*000001	0001xxxx xxxxx*1*00	0001*1*010	4
	End of text marker (ANSI ASCII DEL)	7	127	*1*111111	11111xxx xxxxxx*1*1	11111*1*00	5
GPI	Presence Indicator (Recipient)	1	1	1	xxxxx1xx		
encode rest of the message as in Figure 52							

G.3.3 Transport layer data exchange. The relationship of the Transport Layer to other communication layers is shown in Figure 57. A user of the Transport Layer exchanges data with its peer at another node by sending and receiving the Application Layer PDU via the Transport Layer. The Transport Layer sends and receives the Application Layer PDU transparently by producing and exchanging a Transport Layer Protocol Data Unit (PDU) with its peer at another node. The Transport Layer PDU consists of the Transport Header concatenated with the Application Layer PDU, and is sent and received via lower layer communication layers. The lower communication layers send and receive the Transport PDU transparently over a variety of communications media.

Downloaded from http://www.everyspec.com

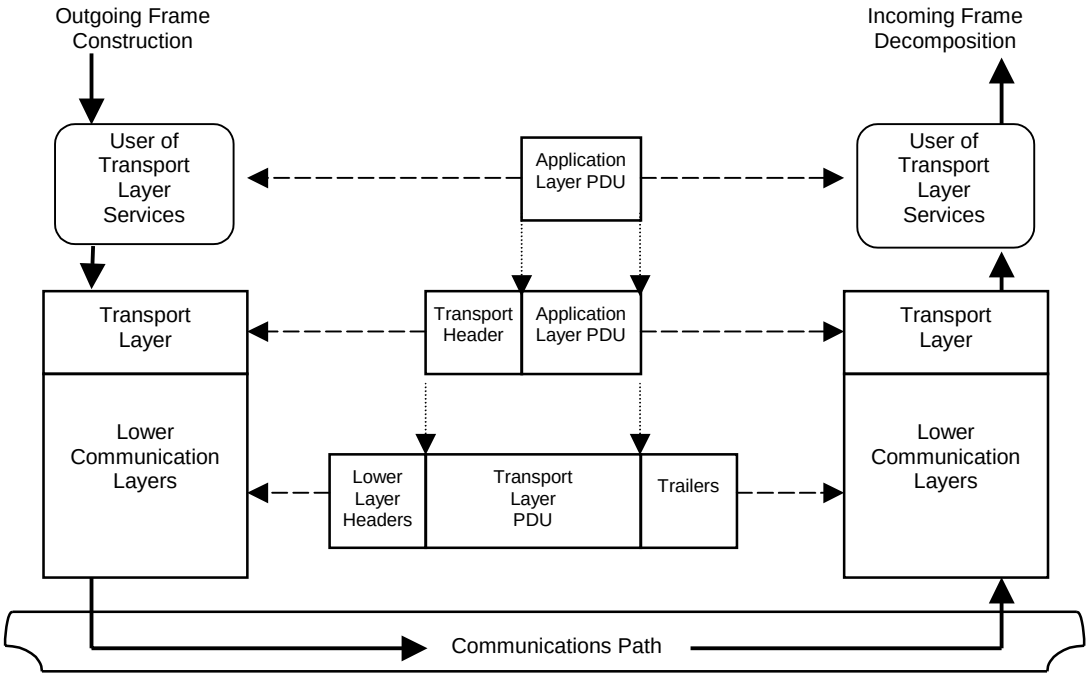

FIGURE 57. Transport layer interaction with other communication layers.

The relationship of the Transport Layer PDU's data buffer/stream to the Application Layer is depicted in Figure 58. The Transport Layer PDU is defined as a buffer or stream of octets consisting of the VMF message, Application Header and Transport Header.

Downloaded from http://www.everyspec.com

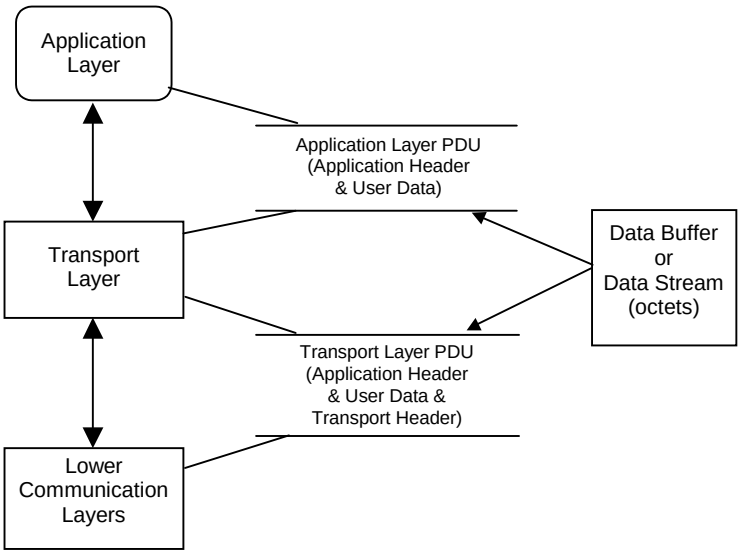

FIGURE 58. Exchange of transport layer PDU between communication layers.

G.3.3.1 An example of UDP header construction. UDP is described by RFC 768. The UDP header from RFC 768 consists of 8 octets as shown in Figure 59 with the example values to be used for this appendix. Since the RFC treats bit 0 as MSB, Figures 59 and 60 show B_0 as MSB. For this example, the source has a value of 1581, destination of 1581, length of 30 and the checksum equals 3491. MIL-STD-188-220 typically treats the LSB as bit 0.

0 7	**8 15**	**16 23**	**24 31**
UDP Source (1581)		UDP Destination (1581)	
UDP Length (30)		UDP Checksum (3491)	

FIGURE 59. UDP header.

Figure 60 illustrates the eight octets comprising UDP with the binary bit patterns. Each octet is marked to show both the MSB and LSB of each octet. It demonstrates how each of the octets are arranged and passed in order to next layer.

Downloaded from http://www.everyspec.com

APPENDIX G

Octet 0	**Octet 1**	**Octet 2**	**Octet 3**
B_0 B_7	B_8 B_{15}	B_{16} B_{23}	B_{24} B_{31}
2^7 2^0	2^7 2^0	2^7 2^0	2^7 2^0
*0*0000110	00101101	*0*0000110	00101101
UDP Source (1581)		**UDP Destination (1581)**	

Octet 4	**Octet 5**	**Octet 6**	**Octet 7**
B_0 B_7	B_8 B_{15}	B_{16} B_{23}	B_{24} B_{31}
2^7 2^0	2^7 2^0	2^7 2^0	2^7 2^0
*0*0000000	00011110	*0*0001101	10100011
UDP Length (30)		**UDP Checksum (3491)**	

FIGURE 60. Octet representation of UDP header.

The construction of a Transport Layer Header is illustrated by the example in Table LXI. The first four columns of the table provide a description of each field in both Dec and binary representations. The last two columns show the physical encoding of the Transport Layer PDU. In the fifth column, Field Fragments, the bits of each field are placed in octets. The bits(s) of each field are positioned in an octet such that the MSB of the field is positioned in the most significant unencoded bit of the octet, the next MSB of the field is placed in the next most significant unencoded bit of the octet, and repeated until all of the bits of the field have been encoded. When an octet is filled before all the bits of a field are encoded, the process is continued encoding the next octet with the remaining bits of the field. This field/octet encoding procedure is performed starting with the first field and octet, and repeated for each successive field and individual octet, in order, until the encoding is completed. The sixth column, Octet Value - Binary, assembles the bits contributed by successive fields into complete octets, represented in binary. The last column, Octet Number, numbers the octets from first to last starting with 0.

Downloaded from http://www.everyspec.com

APPENDIX G

TABLE LXI. Example construction of UDP header.

Field Name	Length (bits)	Value (Dec)	Value (Binary)	Field Fragments	Octet Value (Binary)	Octet Number
			MSB **LSB** 2^{15} 2^{0}	**MSB** **LSB** 2^{7} 2^{0}	**MSB** **LSB** 2^{7} 2^{0}	
UDP Source	16	1581	*0*000011000101101	*0* 0 0 0 0 1 1 0 0 0 1 0 1 1 0 1	*0* 0 0 0 0 1 1 0 0 0 1 0 1 1 0 1	0 1
UDP Destination	16	1581	*0*000011000101101	*0* 0 0 0 0 1 1 0 0 0 1 0 1 1 0 1	*0* 0 0 0 0 1 1 0 0 0 1 0 1 1 0 1	2 3
UDP Length	16	30	*0*000000000011110	*0* 0 0 0 0 0 0 0 0 0 0 1 1 1 1 0	*0* 0 0 0 0 0 0 0 0 0 0 1 1 1 1 0	4 5
UDP Checksum	16	3491	*0*000000010100011	*0* 0 0 0 1 1 0 1 1 0 1 0 0 0 1 1	*0* 0 0 0 1 1 0 1 1 0 1 0 0 0 1 1	6 7

Table LXII illustrates the eight octets of the Transport Header showing the binary value of the octet, the octet number (0-7) and the field represented by each octet. Note that the bit with the bold italicized font identifies the MSB (2^n) of the field, not the octet.

TABLE LXII. Octet representation of UDP header.

Octet Value (Binary)	Octet Number	Field Name
2^7 2^0		
0 0 0 0 0 1 1 0	0	**Source**
0 0 1 0 1 1 0 1	1	**Source**
0 0 0 0 0 1 1 0	2	**Destination**
0 0 1 0 1 1 0 1	3	**Destination**
0 0 0 0 0 0 0 0	4	**Length**
0 0 0 1 1 1 1 0	5	**Length**
0 0 0 0 1 1 0 1	6	**Checksum**
1 0 1 0 0 0 1 1	7	**Checksum**

Figure 61 provides a serial representation of the UDP header, as it would appear at the physical layer.

Downloaded from http://www.everyspec.com

APPENDIX G

Octet 0	Octet 1	Octet 2	Octet 3	Octet 4	Octet 5	Octet 6	Octet 7
2^0 2^7	2^0 2^7	2^0 2^7	2^0 2^7	2^0 2^7	2^0 2^7	2^0 2^7	2^0 2^7
0 1 1 0 0 0 0 *0*	1 0 1 1 0 1 0 0	0 1 1 0 0 0 0 *0*	1 0 1 1 0 1 0 0	0 0 0 0 0 0 0 *0*	0 1 1 1 1 0 0 0	1 0 1 1 0 0 0 *0*	1 1 0 0 0 1 0 1

FIGURE 61. Serial representation of UDP header.

G.3.4 Network layer data exchange. The relationship of the Network Layer to other communication layers is shown in Figure 62. A user of the Network Layer exchanges data with its peer at another node by sending and receiving the Transport Layer PDUs via the Network Layer. The Network Layer sends and receives the Transport Layer PDUs transparently by producing and exchanging a Network Layer PDU. The Network Layer PDU consists of the Network Headers concatenated with the Transport Layer PDU, and is sent and received via lower layer communication layers. The lower communication layers send and receive the Network Layer PDU transparently over a variety of communications media.

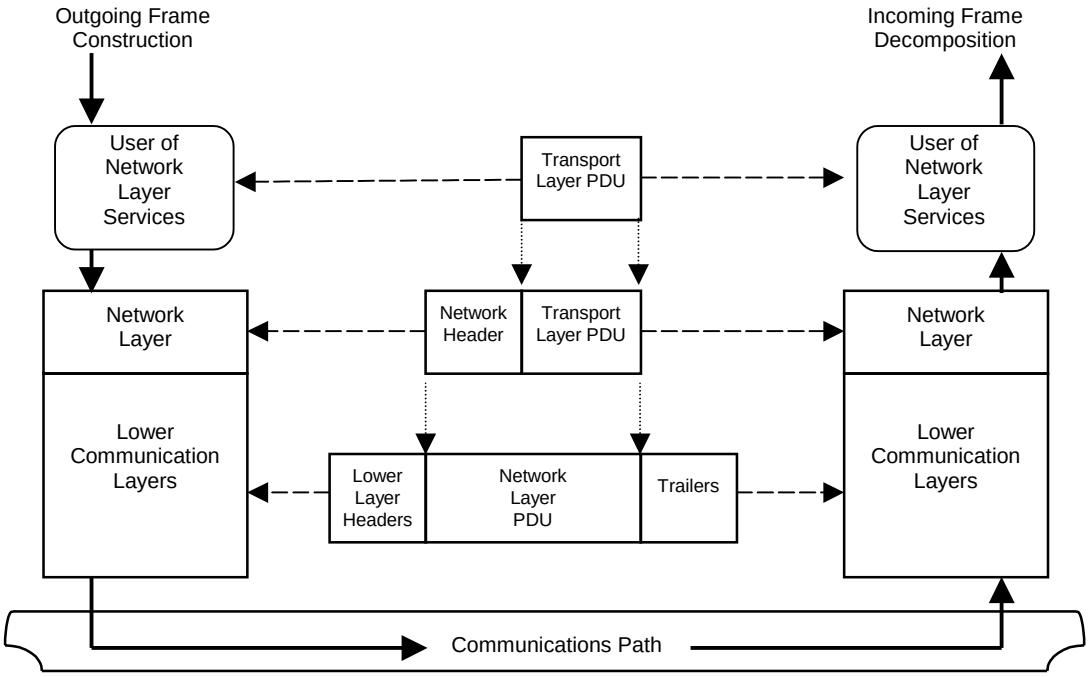

FIGURE 62. Network layer interaction with other communication layers.

Downloaded from http://www.everyspec.com

APPENDIX G

The relationship of the Network Layer PDU's data buffer/stream to the Transport Layer is depicted in Figure 63. The Network Layer PDU is defined as a buffer or stream of octets consisting of the VMF message, Application Header, Transport Header and Network Headers. There are two Network Headers in the Network Layer PDU when using MIL-STD-188-220.

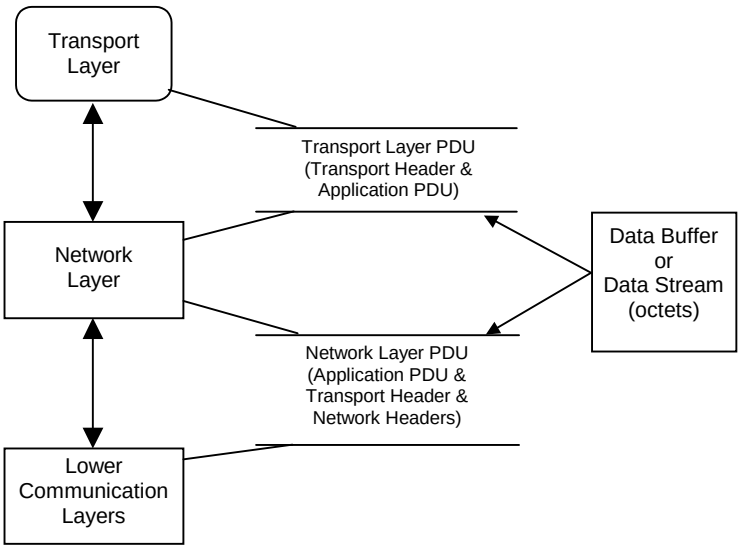

FIGURE 63. Exchange of network layer PDU between communication layers.

The Internet Protocol (IP) is described by RFC 791. The IP header from RFC 791 is shown in Figure 64 with the example values, in parentheses, to be used for this appendix.

0 0 1 2 3 4 5 6 7		1 8 9 0 1 2 3 4 5	2 6 7 8 9 0 1 2 3		3 4 5 6 7 8 9 0 1
Ver (4)	IHL (5)	Type of Service (0)	Total Length (50)		
Identification (1)			Flag (0)	Fragment Offset (0)	
Time to Live (50)		Protocol (17)	Header Checksum (4093)		
Source Address (192.31.124.65)					
Destination Address (192.31.124.61)					

FIGURE 64. IP header.

Downloaded from http://www.everyspec.com

APPENDIX G

G.3.4.1 Example of internet layer header. The construction of an Internet Layer Header is illustrated by the example in Table LXIII. The first four columns of the table provide a description of each field in the example, the field length in bits, and the value of the field in both Dec and binary representations. The last three columns show the physical encoding of the Internet Layer Header. In the fifth column, Field Fragments, the bits of each field are placed in octets. The bit(s) of each field are positioned in an octet such that the MSB of the field is positioned in the most significant unencoded bit of the octet, the next MSB of the field is placed in the next most significant unencoded bit of the octet, and repeated until all of the bits of the field have been encoded. When an octet is filled before all the bits of a field are encoded, the process is continued encoding the next octet with the remaining bits of the field. This field/octet encoding procedure is performed starting with the first field and octet, and repeated for each successive field and individual octet, in order, until the encoding is completed. X's are used to identify bits that are not associated with the field being encoded. The sixth column, Octet Value - Binary, assembles the bits contributed by successive fields into complete octets, represented in binary. The last column, Octet Number, numbers the octets from first to last starting with 0.

Downloaded from http://www.everyspec.com

APPENDIX G

TABLE LXIII. Example construction of IP header.

Field Name	Length (bits)	Value (Dec)	Value (Binary) 2^n 2^0	Field Fragments 2^n 2^0	Octet Value (Binary) 2^n 2^0	Octet Number
Version	4	4	*0*100	*0*100xxxx		
Internet Header Length	4	5	*0*101	xxxx*0*101	*0*100*0*101	0
Type of Service	8	0	*0*0000000	*0*0000000	*0*0000000	1
Length	16	50	*0*000000000110010	*0*0000000 00110010	*0*0000000 00110010	2 3
Identification	16	1	*0*000000000000001	*0*0000000 00000001	*0*0000000 00000001	4 5
Flags	3	0	*0*00	*0*00xxxxx		
Fragmentation Offset	13	0	*0*000000000000	xxx*00*000 00000000	*00*00000 00000000	6 7
Time to Live	8	50	*0*0110010	*0*0110010	*0*0110010	8
Protocol	8	17	*0*0010001	*0*0010001	*0*0010001	9
Header Checksum	16	4093	*0*000111111111101	*0*0001111 11111101	*0*0001111 11111101	10 11
Source Address	32	192.31.124.65	*1*100000000011111 0111110001000001	*1*1000000 00011111 01111100 01000001	*1*1000000 00011111 01111100 01000001	12 13 14 15
Destination Address	32	192.31.124.61	*1*100000000011111 0111110000111101	*1*1000000 00011111 01111100 00111101	*1*1000000 00011111 01111100 00111101	16 17 18 19

Figure 65 illustrates the Internet Header demonstrating the relationship between the individual bits (B^0 - B^7), the bit weighting (2^7 - 2^0), the individual fields and the example bit patterns associated with each field.

Downloaded from http://www.everyspec.com

APPENDIX G

Octet 0		Octet 1	Octet 2	Octet 3
B_0 B_7		B_0 B_7	B_0 B_7	B_0 B_7
2^7 2^0		2^7 2^0	2^7 2^0	2^7 2^0
0 1 0 0 *0* 1 0 1		*0* 0 0 0 0 0 0 0	*0* 0 0 0 0 0 0 0	0 0 1 1 0 0 1 0
Ver (4)	**IHL (5)**	**Type of Service (0)**	**Total Length (50)**	

Octet 4	Octet 5	Octet 6		Octet 7
B_0 B_7	B_0 B_7	B_0 B_7		B_0 B_7
2^7 2^0	2^7 2^0	2^7 2^0		2^7 2^0
0 0 0 0 0 0 0 0	0 0 0 0 0 0 1	0 0 0	*0* 0 0 0 0	0 0 0 0 0 0 0 0
Identification (1)		**Flag (0)**	**Fragment Offset (0)**	

Octet 8	Octet 9	Octet 10	Octet 11
B_0 B_7	B_0 B_7	B_0 B_7	B_0 B_7
2^7 2^0	2^7 2^0	2^7 2^0	2^7 2^0
0 0 1 1 0 0 1 0	*0* 0 0 1 0 0 0 1	*0* 0 0 0 1 1 1 1	1 1 1 1 1 1 0 1
Time (50)	**Protocol (17)**	**Header Checksum (4093)**	

Octet 12	Octet 13	Octet 14	Octet 15
B_0 B_7	B_0 B_7	B_0 B_7	B_0 B_7
2^7 2^0	2^7 2^0	2^7 2^0	2^7 2^0
1 1 0 0 0 0 0 0	0 0 0 1 1 1 1 1	0 1 1 1 1 1 0 0	0 1 0 0 0 0 0 1
Source Address (192.31.124.65)			

Octet 16	Octet 17	Octet 18	Octet 19
B_0 B_7	B_0 B_7	B_0 B_7	B_0 B_7
2^7 2^0	2^7 2^0	2^7 2^0	2^7 2^0
1 1 0 0 0 0 0 0	0 0 0 1 1 1 1 1	0 1 1 1 1 1 0 0	0 0 1 1 1 1 0 1
Destination Address (192.31.124.61)			

FIGURE 65. Octet representation of IP header.

G.3.4.2 Example of intranet layer header. The construction of an Intranet Layer Header is illustrated by the example in Table LXIV. The first four columns of the table provide a description of each field in the example, the field length in bits, and the value of the field in both Dec and binary representations. The last three columns show the physical encoding of the

Downloaded from http://www.everyspec.com

APPENDIX G

Intranet Layer Header. In the fifth column, Field Fragments, the bits of each field are placed in octets. The bit(s) of each field are positioned in an octet such that the LSB of the field is positioned in the least significant unencoded bit of the octet, the next LSB of the field is placed in the next least significant unencoded bit of the octet, and repeated until all of the bits of the field have been encoded. When an octet is filled before all the bits of a field are encoded, the process is continued encoding the next octet with the remaining bits of the field. This field/octet encoding procedure is performed starting with the first field and octet, and repeated for each successive field and individual octet, in order, until the encoding is completed. X's are used to identify bits that are not associated with the field being encoded. The sixth column, Octet Value - Binary, assembles the bits contributed by successive fields into complete octets, represented in binary. The last column, Octet Number, numbers the octets from first to last starting with 0. This example only illustrates the Intranet Header fields that are be transmitted as a minimum.

TABLE LXIV. Example construction of intranet header (minimum).

Field Name	**Length (bits)**	**Value (Dec)**	**Value (Binary)** 2^n … 2^0	**Field Fragments** 2^7 … 2^0	**Octet Value (Binary)** 2^7 … 2^0	**Octet Number**
Version Number	4	0	*0*000	xxxx*0*000		
Message Type	4	4	*0*100	*0*100xxxx	*0*100*0*000	0
Intranet Header Length	8	3	*0*0000011	*0*0000011	*0*0000011	1
Type of Service	8	0	*0*0000000	*0*0000000	*0*0000000	2

The Intranet layer is defined in MIL-STD-188-220 and is shown in Figure 66 with the example values used in this appendix.

Octet 0		**Octet 1**	**Octet 2**
2^0 … 2^7		2^0 … 2^7	2^0 … 2^7
0 0 0 *0*	0 0 1 *0*	1 1 0 0 0 0 0 *0*	0 0 0 0 0 0 0 *0*
Version (0)	**Message Type (4)**	**Intranet Header Length (3)**	**Type of Service (0)**

FIGURE 66. Intranet header.

Figure 67 provides a serial representation of the Network Layer PDU as it would appear at the physical layer.

Downloaded from http://www.everyspec.com

APPENDIX G

Intranet header			**IP header**				
Octet 0	**Octet 1**	**Octet 2**	**Octet 3**	**Octet 4**	**Octet 5**	**Octet 6**	**Octet 7**
2^0 2^7	2^0 2^7	2^0 2^7	2^0 2^7	2^0 2^7	2^0 2^7	2^0 2^7	2^0 2^7
0000001*0*	1100000*0*	0000000*0*	1010001*0*	0000000*0*	0000000*0*	01001100	0000000*0*

IP header (continued)							
Octet 8	**Octet 9**	**Octet 10**	**Octet 11**	**Octet 12**	**Octet 13**	**Octet 14**	**Octet 15**
2^0 2^7	2^0 2^7	2^0 2^7	2^0 2^7	2^0 2^7	2^0 2^7	2^0 2^7	2^0 2^7
10000000	0000000*0*	00000000	0100110*0*	1000100*0*	1111000*0*	10111111	0000001*1*

IP header (continued)						**IP header (end)**
Octet 16	**Octet 17**	**Octet 18**	**Octet 19**	**Octet 20**	**Octet 21**	**Octet 22**
2^0 2^7	2^0 2^7	2^0 2^7	2^0 2^7	2^0 2^7	2^0 2^7	2^0 2^7
11111000	00111110	10000010	0000001*1*	11111000	00111110	10111100

FIGURE 67. Serial representation of network layer PDU.

G.3.5 This paragraph was intentionally deleted and left blank for paragraph conformity.

G.3.6 Data link layer data exchange. The relationship of the Data Link Layer to other communication layers is shown in Figure 68. A user of the Data Link Layer exchanges the Network Layer PDU with its peer at another node by sending and receiving the Network PDU via the Data Link Layer. The Data Link Layer sends and receives the VMF message transparently by producing and exchanging a Data Link Layer PDU with its peer at another node. The Data Link Layer PDU consists of the Transmission Header, and Data Link Frame Header, Network PDU, and the Data Link Frame Trailer, and is sent and received via the Physical layer. The Physical layer sends and receives the VMF message transparently over a variety of communications media.

Downloaded from http://www.everyspec.com

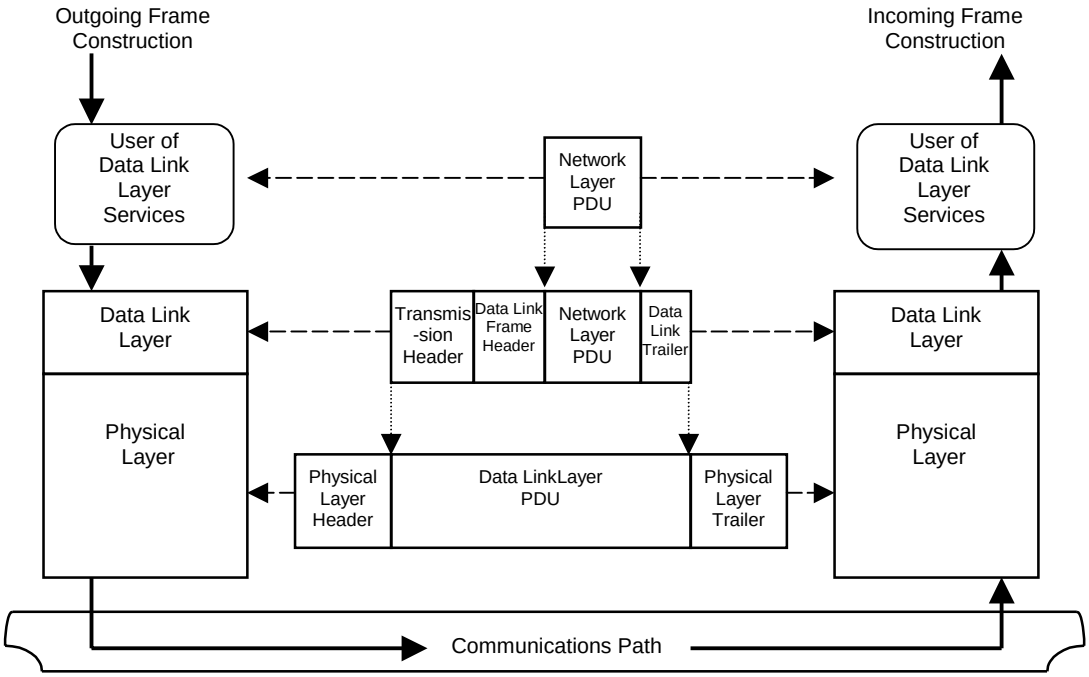

FIGURE 68. Data link layer interaction with other communication layers.

The format of the Data Link Layer PDU is defined in terms of the actual data buffer or data stream used to exchange the PDU between the Network Layer and the Physical Layer. The relationship of the Data Link Layer PDU's data buffer/stream to the Intranet Layer is depicted in Figure 69. The Data Link Layer PDU is defined as a buffer or stream of octets consisting of the Transmission Header, Data Link Frame Header, Network PDU and Data Link Layer trailer.

Downloaded from http://www.everyspec.com

APPENDIX G

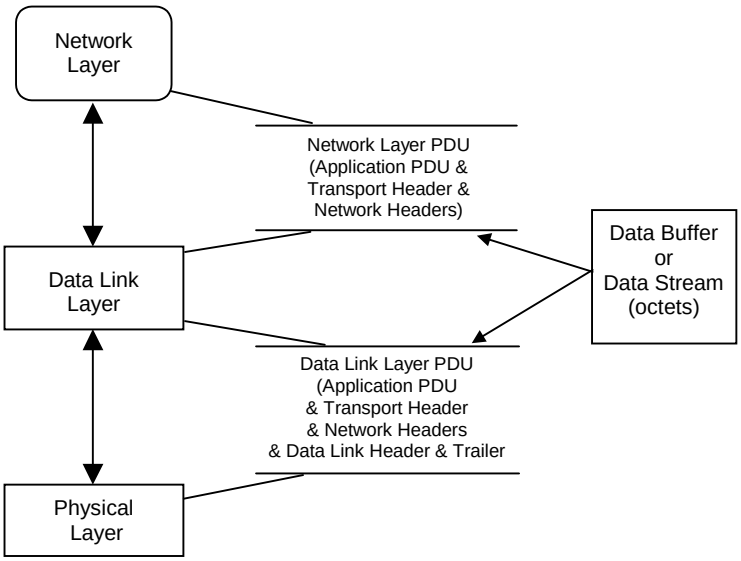

FIGURE 69. Exchange of data link layer PDU between communication layers.

G.3.6.1 Example of data link layer PDU. The Data Link Layer PDU consists of the Transmission Header, Data Link Frame Header, followed by the information field and Data Link Frame Trailer as shown in Figure 70. The information field consists of the Network PDU described previously (VMF message, Application Header, Transport Header, IP Header and Intranet Header).

Trans-mission Header	**Data Link Frame Header**	**Information Field**	**Data Link Frame Trailer**

FIGURE 70. Data link layer PDU.

Table LXV illustrates the Data Link Frame Header, and Table LXVI illustrates the Data Link Frame Trailer. The first four columns of the tables provide a description of each field in the example, the field length in bits, and the value of the field in both Dec and binary representations. The last three columns show the bit serial physical Transmission order of the Data Link Frame as a sequence of octets with the bits of each octet transmitted LSB first. In the fifth column, Field Fragments, the bits of each field are placed in octets, in accordance with 5.3.4.3.1. The bit(s) of

Downloaded from http://www.everyspec.com

each field, other than the FCS field, are positioned in an octet such that the LSB of the field is positioned in the least significant unencoded bit of the octet, the next LSB of the field is placed in the next least significant unencoded bit of the octet, and repeated until all of the bits of the field have been encoded. The bit(s) of FCS fields are positioned in an octet such that the MSB of the field is positioned in the least significant unencoded bit of the octet, the next MSB of the FCS field is placed in the next least significant unencoded bit of the octet, and repeated until all of the bits of the FCS field have been encoded. When an octet is filled before all the bits of a field are encoded, the process is continued encoding the next octet with the remaining bits of the field. This field/octet encoding procedure is performed starting with the first field and octet, and repeated for each successive field and individual octet, in order, until the encoding is completed. The sixth column, Octet Value - Binary, assembles the bits contributed by successive fields into complete octets, represented in binary and transmitted LSB first. The last column, Octet Number, numbers the octets in the order in which they will be transmitted, from first to last starting with 0.

TABLE LXV. Example construction of data link frame header.

Field Name	**Length (bits)**	**Value (Dec)**	**Value (Binary)**	**Field Fragments**	**Octet Value (Binary)**	**Octet Number**
			2^n 2^0	2^7 2^0	2^7 2^0	
Flag	8	126	*0*1111110	*0*1111110	*0*1111110	0
Command/Response Bit	1	0	0	xxxxxxxx0		
Source Address	7	7	*0*000111	*0*000111x	*0*0001110	1
Extension Bit	1	1	1	xxxxxxx1		
Destination Address	7	4	*0*000100	*0*000100x	*0*0001001	2
Control Field	8	19	*0*0010011	*0*0010011	*0*0010011	3

Downloaded from http://www.everyspec.com

APPENDIX G

TABLE LXVI. Example construction of data link frame trailer.

Field Name	**Length (bits)**	**Value (Dec)**	**Value (Binary)**	**Field Fragments**	**Octet Value (Binary)**	**Octet Number**
			2^n 2^0	2^7 2^0	2^7 2^0	
Frame Check Sequence (transmitted MSB first)	32	162159999	*0*000100110101010 0101110101111111	*1*0010000 01010101 10111010 11111110	*1*0010000 01010101 10111010 11111110	0 1 2 3
Flag	8	126	*0*1111110	*0*1111110	*0*1111110	4

Table LXVII illustrates the octets comprising the Data Link Frame showing the actual bit serial physical transmission order of the fields from the previous examples for each layer, the octet number based on each individual layer, and the octet number based on entire Data Link Frame. The first column, labeled Octet Value – Binary, shows the bits contributed by successive fields as completed octets represented in Binary and transmitted LSB first. The last column, Octet Number (Entire Transaction), numbers the octets in the order in which they will be transmitted, from first to last octet starting with 0. This data is shown in serial representation as it would be transmitted in Figure 71.

Downloaded from http://www.everyspec.com

APPENDIX G

TABLE LXVII. Octets comprising data link frame.

Octet Value (Binary) 2^7 2^0	Nomenclature	Octet Number (Individual Layer)	Octet Number (Entire Transaction)
*0*1111110	**Flag**	0	0
*0*0001110	**Source Address**	1	1
*0*0001001	**Destination Address**	2	2
*0*0010011	**Control Field**	3	3
*0*100*0*000	***INTRANET HEADER***	0	4
*0*0000011		1	5
*0*0000000		2	6
*0*100*0*101	***IP HEADER***	0	7
*0*0000000		1	8
*0*0000000		2	9
00110010		3	10
*0*0000000		4	11
00000001		5	12
*0*0*0*0000		6	13
•		•	•
•		•	•
01111100		18	25
00111101		19	26
*0*0000110	***UDP HEADER***	0	27
00101101		1	28
*0*0000110		2	29
•		•	•
•		•	•
10100011		7	34

Downloaded from http://www.everyspec.com

APPENDIX G

TABLE LXVII. Octets comprising data link frame - Continued.

Octet Value (Binary) 2^7 2^0	Nomenclature	Octet Number (Individual Layer)	Octet Number (Entire Transaction)
1110*0*001		0	35
00001011		1	36
•		•	•
•		•	•
0*1*110000		10	45
00000*10*		11	46
01*011*1*1*	***APPLICATION HEADER***	12	47
01000*0*0		13	48
•		•	•
•		•	•
0000*0*100		15	50
*0*0000000		16	51
11*00*1*0*00		0	52
10*1*00000		1	53
111*1*0000		2	54
11000000		3	55
•	***CHECKFIRE MESSAGE***	•	•
•		•	•
0000*0*000		4	56
10010000	**Note: FCS transmitted MSB First**	0	57
01010101	**FCS**	1	58
10111010		2	59
11111110		3	60
*0*1111110	**Flag**	0	61

Downloaded from http://www.everyspec.com

APPENDIX G

DATA LINK FRAME HEADER				INTRANET HEADER				IP	
0	1	2	3	4		5	6	7	
2^0 2^7	2^0 2^7	2^0 2^7	2^0 2^7	2^0 2^7		2^0 2^7	2^0 2^7	2^0 2^7	
FLAG	SRC	DST	CNTL	V	T	LEN	TOS	L	V
01111110	01110000	10010000	11001000	0000	0010	11000000	00000000	1010	0010

IP (cont.)						
8	9	10	11	12	13	14
2^0 2^7	2^0 2^7	2^0 2^7	2^0 2^7	2^0 2^7	2^0 2^7	2^0 2^7
TOS	Total Length		Identification		Offset	Flag	Offset
00000000	00000000	01001100	00000000	10000000	00000	000	00000000

IP (cont.)		UDP			
25	26	27	28	29	30
2^0 2^7	2^0 2^7	2^0 2^7	2^0 2^7	2^0 2^7	2^0 2^7
DESTINATION		SOURCE		DESTINATION	
00111110	10111100	01100000	10110100	01100000	10110100

APP. HEADER		
34	35	36
2^0 2^7	2^0 2^7	2^0 2^7
CHKSM	GPI-FPI-ORIG	
11000101	10000111	11010000

APP. HEADER			
45	46	47	48
2^0 2^7	2^0 2^7	2^0 2^7	2^0 2^7
Message Size- etc.			GPI-YR
00001110	00100000	11111010	00000010

APP. HEADER		VMF MESSAGE			
50	51	52	53	54	55
2^0 2^7	2^0 2^7	2^0 2^7	2^0 2^7	2^0 2^7	2^0 2^7
Min/Sec-etc.		CF-etc.	GROUP-etc		
00100000	00000000	00010011	00000101	00001111	00000011

LINK FRAME TRAILER					
56	57	58	59	60	61
2^0 2^7	2^0 2^7	2^0 2^7	2^0 2^7	2^0 2^7	2^0 2^7
Pad	FCS				FLAG
00000000	00001001	10101010	01011101	01111111	01111110

FIGURE 71. Serial representation of data link layer PDU.

Downloaded from http://www.everyspec.com

G.3.6.1.1 Zero bit insert/v36 scramble/FEC/TDC of the data link frame. The Data Link Frame is zero filled to prevent any part of the data accidentally being interpreted as a Frame Flag. Also in our example scrambling, FEC and TDC are being used. Figure 72 shows some of the example data before applying zero-bit insertion, scrambling, FEC or TDC. After zero-bit insertion, scrambling, FEC and TDC, the fields are not easy to identify; therefore field names are not shown.

Octet 0	**Octet 1**	**Octet 2**	**Octet 3**	**Octet 4**	**Octet 5**
2^0 2^7	2^0 2^7	2^0 2^7	2^0 2^7	2^0 2^7	2^0 2^7
0x7E	0x70	0x90	0xC8	0x02	0xC0

Octet 58	**Octet 59**	**Octet 60**	**Octet 61**	**Octet 62**	**Octet 63**
2^0 2^7	2^0 2^7	2^0 2^7	2^0 2^7	2^0 2^7	2^0 2^7
0x09	0xAA	0x5D	0x7F	0x7E	0x00

FIGURE 72. Data before zero bit insertion in transmission order.

The following is a Hex dump of the data link frame in the different stages: (a) zero-bit inserted, (b) scrambled, (c) FEC, and (d) TDC:

Note: In the following dumps the 16 bit values are in transmission order (LSB first). The TWC in the physical layer is defined in words and fields are no longer easily distinguishable.

a. Data after zero bit insertion (505 bits plus 7 padding bits)
0x7e70 0x90c8 0x02c0 0x00a2 0x0000 0x4c00 0x8000 0x004c 0x88f0 0xbe81 0xf60f 0x9040 0x7d83 0xe5e3 0x05a3 0x05a0 0x03c5 0x862c 0x3e40 0x0002 0x9f00 0x0002 0x5200 0x1c41 0xf202 0x0420 0x0013 0x050f 0x0300 0x09aa 0x5d7d 0xbf00

b. Data after V.36 scrambling (505 bits plus 7 padding bits)
0x8f80 0x872a 0xa161 0x7a0a 0xbfaa 0x524c 0x50c3 0x50aa 0x024c 0x6cc2 0x9ca9 0x6b17 0xe9f3 0x0403 0xbda9 0xfe4c 0xfc54 0x3014 0x02e2 0xe3a7 0xb9fa 0xdf90 0x0006 0x2754 0xf1bf 0x5f20 0x0b70 0xe695 0x59a2 0xfc47 0x616b 0x5d00

Downloaded from http://www.everyspec.com

c. Data after FEC(Golay 24,12) (1032 bits plus 8 padding bits)
Golay (24,12) is derived from Golay (23,12): See F 4.1 for details.
0x8f8a 0x5a08 0x7898 0x2aae 0x8616 0x140a 0x7a0b 0xf0ab 0xf3e8 0xaa54 0x7624 0xc5a0 0x50c6 0xde35 0x0622 0xaa06 0x0a24 0xc5a0 0x6cc0 0x4029 0xc884 0xa960 0x08b1 0x7c8c 0xe9f3 0x1e30 0x424a 0x03b9 0xb8da 0x9dc0 0xfe40 0x8acf 0xc6f6 0x543d 0xc201 0x49f0 0x02e8 0xa22e 0x3632 0xa7b7 0x3c9f 0xa4d0 0xdf93 0x3e00 0x0000 0x0622 0x6a75 0x4a8e 0xf1bd 0xe6f5 0xfae8 0x200f 0x68b7 0x0c9a 0xe69b 0x5e55 0x9a5c 0xa2f3 0x54c4 0x7c94 0x6169 0x9cb5 0xd5ec 0x4105 0x5c00

d. Data after TDC(16,24) (1152 bits)
0x8623 0x0888 0x2f7f 0x18c1 0xee2e 0x9158 0xbe20 0x8447 0xa59c 0x479f 0x6403 0x5601 0xe805 0x33f1 0xace0 0x0d10 0x6d95 0x8e88 0x0f50 0xca80 0xd4a3 0x2285 0xb2e0 0x0000 0x9c38 0x9e09 0xc861 0x5a19 0x9c58 0x0e7b 0x3cfa 0xa539 0xb4b8 0xcd81 0xa2f2 0xb268 0x3381 0x1670 0xc46b 0xb328 0x3f91 0x5712 0x25ea 0xa578 0xe82b 0x8429 0xcecb 0x0000 0xdb40 0xcda0 0xfac0 0xd440 0x0000 0x5d40 0x1a00 0xd4e0 0xce40 0x43c0 0xc380 0xcf40 0xfd80 0xb160 0x6e00 0xaae0 0xd1c0 0xee60 0xe040 0x1fa0 0x7ce0 0x8fe0 0x9800 0x0000

G.3.6.1.2 Construction of the transmission header. The Transmission Header precedes the data link frame and formatted as defined in Table LXVIII.

TABLE LXVIII. Example construction of data link transmission header.

Field Name	Length (bits)	Value (Dec)	Value (Binary) 2^n … 2^0	Field Fragments 2^7 … 2^0	Octet Value (Binary) 2^7 … 2^0	Octet Number
Flag	8	126	*0*1111110	*0*1111110	*0*1111110	0
FEC	1	1	1	xxxxxxx1		
TDC	1	1	1	xxxxxx1x		
Scramble	1	1	1	xxxxx1xx		
Topology Update Id	3	0	*0*00	xx*0*00xxx		

Downloaded from http://www.everyspec.com

APPENDIX G

TABLE LXVIII. Example construction of data link transmission header - Continued.

Transmit Queue	10	0	*0*000000000	00xxxxxx *0*0000000	00*0*0111 *0*0000000	1 2
FCS	32	471931248	*0*001110000100001 0001100101110000	*0*0011100 00100001 00011001 01110000	*0*0111000 10000100 10011000 00001110	3 4 5 6
Flag	8	126	*0*1111110	*0*1111110	*0*1111110	7

G.3.6.1.3 Zero bit insert/v36 scramble/FEC of the transmission header. The Transmission Header is zero inserted to prevent any part of the data accidentally being interpreted as a Frame Flag. After zero-bit insertion, the fields are not easy to identify; therefore field names are not shown. The following is a Hex dump of the Transmission Header of zero-bit inserted:

Transmission Header after zero bit insertion (64 bits)
0x7ee0 0x001c 0x2119 0x707e

G.3.6.1.4 Completed data link layer PDU to be passed to the physical layer. The data link layer passes the Data Link Layer PDU to the physical layer. The elements of a Data Link Layer PDU include one transmission header and one or more PDUs. The following complete data link PDU (consisting of transmission header and data link frame) will be passed to the physical layer:

Complete Data Link Layer PDU

a. Transmission Header (64 bits):
0x7ee0 0x001c 0x2119 0x707e

b. Data Link Layer Frame (1152 bits):
0x8623 0x0888 0x2f7f 0x18c1 0xee2e 0x9158 0xbe20 0x8447 0xa59c 0x479f 0x6403 0x5601 0xe805 0x33f1 0xace0 0x0d10 0x6d95 0x8e88 0x0f50 0xca80 0xd4a3 0x2285 0xb2e0 0x0000 0x9c38 0x9e09 0xc861 0x5a19 0x9c58 0x0e7b 0x3cfa 0xa539 0xb4b8 0xcd81 0xa2f2 0xb268 0x3381 0x1670 0xc46b 0xb328 0x3f91 0x5712 0x25ea 0xa578 0xe82b 0x8429 0xcecb 0x0000 0xdb40 0xcda0 0xfac0 0xd440 0x0000 0x5d40 0x1a00 0xd4e0 0xce40 0x43c0 0xc380 0xcf40 0xfd80 0xb160 0x6e00 0xaae0 0xd1c0 0xee60 0xe040 0x1fa0 0x7ce0 0x8fe0 0x9800 0x0000

Downloaded from http://www.everyspec.com

APPENDIX G

G.3.7 Physical layer data exchange. The relationship of the Physical Layer to other communication layers is shown in Figure 73. A user of the Physical Layer exchanges the Data Link Layer PDU with its peer at another node by sending and receiving the Data Link PDU via the Physical Layer.

1	**2**	**3**	**85**	**86**	**87**
0x64f2	0xf296	0x905e	0xe098	0x0000	0x0000
0110010011110010	1111001010010110	1001000001011110	1110000010011000	0000000000000000	0000000000000000

FIGURE 73. Serial representation of physical layer transmission unit.

G.3.7.1 Physical layer processing example. The Physical layer encodes data submitted by the data link layer in a format to meet the physical media's requirements. This example does not address the electrical or mechanical functions normally associated with the physical layer protocols. At the physical layer the transmission header is extracted and the TWC is calculated, the Transmission header is FEC & TDC encoded except when packet mode is used. Note the other physical layer functions (COMSEC, DMTD, etc) are not shown in this example.

TWC	*Transmission Header*	*Data Link Frame*

Downloaded from http://www.everyspec.com

APPENDIX G

G.3.7.1.1 Transmit word count (TWC). TWC is calculated across the data link frame plus the size of the encoded Transmission Header & TWC size (encoded Transmission Header & TWC [10.5 16-bit words]). Therefore this Physical layer PDU's TWC would be calculated as follows:

TWC = encoded data link frame + encoded Transmission Header and TWC
TWC = 72 words + 10.5 words (rounded up to nearest word)
TWC = 83 words

TWC (83)	*Transmission Header*	*Data Link Frame*

Transmission header including TWC (76 bits plus 4 padding bits)
0xca07 0xee00 0x01c2 0x1197 0x07e0

G.3.7.1.2 FEC & TDC of transmission header. The Transmission Header has FEC & TDC encoding applied. Below is the Transmission Header in the different stages of FEC & TDC:

a. Transmission header/with TWC after FEC (Golay 24,12) (168 bits plus 8 padding bits)
Golay (24,12) is derived form Golay (23,12): See F 4.1 for details.
0xca0f 0x587e 0xe806 0x0000 0x001c 0x20c8 0x1191 0xfe70 0x75a4 0xe005 0x2600

b. Transmission header with TWC after TDC (7,24) (168 bits plus 8 padding bits)
0x838d 0x1aed 0x0a30 0x0448 0x8950 0x6c10 0xe047 0x1d30 0x3c49 0x89d2 0x8000

G.3.7.1.3 The Physical layer PDU. Complete message including 64-bit frame synchronization, TWC, transmission header, and data link frame. (1384 bits plus 8 padding bits):

0x64f2 0xf296 0x905e 0xadd9 0x838d 0x1aed 0x0a30 0x0448 0x8950 0x6c10 0xe047
0x1d30 0x3c49 0x89d2 0x8086 0x2308 0x882f 0x7f18 0xc1ee 0x2e91 0x58be 0x2084
0x47a5 0x9c47 0x9f64 0x0356 0x01e8 0x0533 0xf1ac 0xe00d 0x106d 0x958e 0x880f
0x50ca 0x80d4 0xa322 0x85b2 0xe000 0x009c 0x389e 0x09c8 0x615a 0x199c 0x580e
0x7b3c 0xfaa5 0x39b4 0xb8cd 0x81a2 0xf2b2 0x6833 0x8116 0x70c4 0x6bb3 0x283f
0x9157 0x1225 0xeaa5 0x78e8 0x2b84 0x29ce 0xcb00 0x00db 0x40cd 0xa0fa 0xc0d4
0x4000 0x005d 0x401a 0x00d4 0xe0ce 0x4043 0xc0c3 0x80cf 0x40fd 0x80b1 0x606e
0x00aa 0xe0d1 0xc0ee 0x60e0 0x401f 0xa07c 0xe08f 0xe098 0x0000 0x0000

Downloaded from http://www.everyspec.com

APPENDIX H

INTRANET TOPOLOGY UPDATE

H.1 General.

H.1.1 Scope. This appendix describes a procedure for active intranet topology updates. The intranet is defined as all processors and CNRs within a single transmission channel.

H.1.2 Application. This appendix is a mandatory part of MIL-STD-188-220. The information contained herein is intended for compliance.

H.2 Applicable Documents. This section is not applicable to this appendix.

H.3 Problem overview. Figure 74 shows a sample extended CNR network. Each node labeled A through H is considered to be a radio with an associated communication processor. The dotted ovals indicate subsets of connectivity. Figure 75 is a link diagram of the sample network. Assuming the nodes know nothing about neighbor nodes that are more than 1 hop away, they need to exchange connectivity information. The topology update packet is used to exchange topology information to build up a more complete view of the intranet's topology at every node.

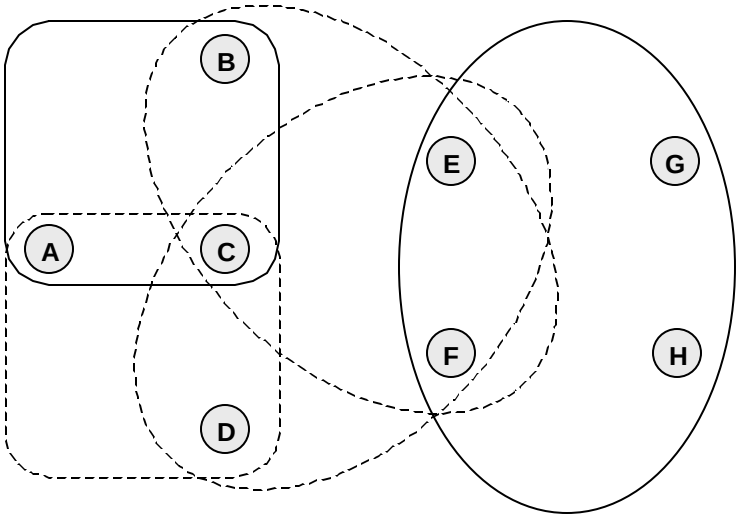

FIGURE 74. Sample intranet.

Downloaded from http://www.everyspec.com

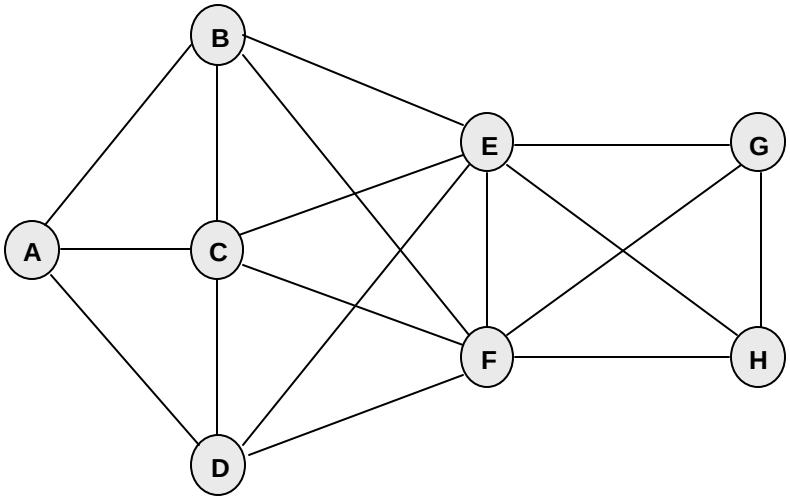

FIGURE 75. Link diagram of sample network.

H.3.1 Routing trees. Each node should store topology information as a routing tree graph. Considering the network in Figure 75, Figure 76 shows the routing tree for nodes A and C prior to the exchange of any topology information. The routing trees for A and C contain only their nearest neighbors - those nodes which they can talk to directly. Similar graphs would exist for all other nodes.

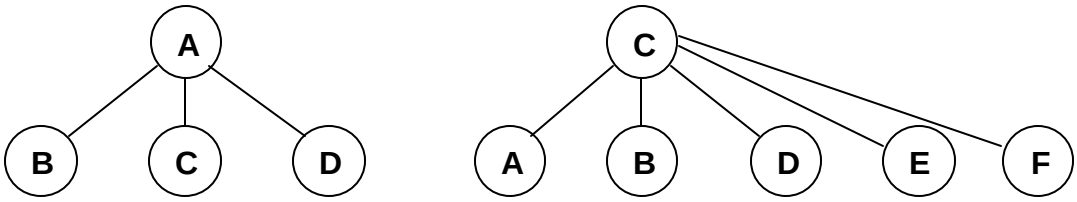

FIGURE 76. Routing tree for nodes A and C.

H.4 Topology updates.

H.4.1 Exchanging routing trees. Nodes in the network gain more topology information by multicasting their individual routing trees to their nearest neighbor nodes. This exchange of routing trees will percolate more complete topology information through the network. For example, assume the routing trees for all

Downloaded from http://www.everyspec.com

nodes in Figure 75 initially contain only nearest neighbors (nodes who are in direct communication with the given node). If node C multicasts its topology information to all nodes one hop away (those which are nearest neighbors), all neighbor nodes integrate C's routing tree into their own. Node A would integrate the graph for Node C into its routing tree as shown in Figure 77.

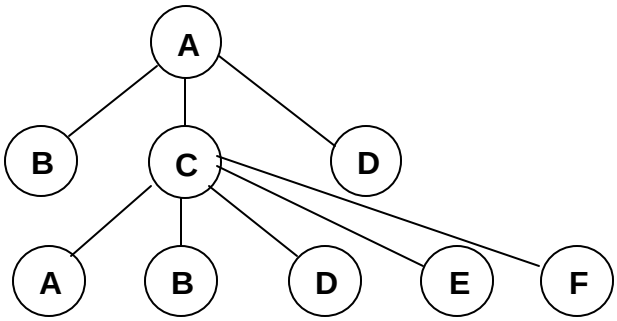

FIGURE 77. Concatenated routing tree for node A.

Before the routing tree is saved, Node A prunes any successive instances of itself. For instance, in Figure 77, the link from A to C is the same as the link from C to A; therefore, the link from C to A is removed. All redundant identical links are also pruned. These are links with the order of the end points reversed.

H.4.2 Topology tables. The topology table for A is shown in Table LXIX. It assumes no nodes are in quiet mode, all nodes can participate in relay, and all links have a cost of 1. The actual link layer addresses for the nodes would be placed into the table in place of the symbols A, B, C, etc. The extension bit in the address octet would always be set to 0 for topology updates.

Downloaded from http://www.everyspec.com

APPENDIX H

TABLE LXIX. Topology table for node A.

Node Address	Node Predecessor	Hops	Cost	NR	Quiet
B	A	1	1	0	0
C	A	1	1	0	0
D	A	1	1	0	0
B	C	2	1	0	0
D	C	2	1	0	0
E	C	2	1	0	0
F	C	2	1	0	0

There are two entries for node B indicating that there are two paths from A to B. This table could be immediately copied to the respective fields of a topology update packet. The predecessor address is not included in the topology update packet for nearest neighbor nodes because the predecessor is, by definition, the originator node.

H.4.3. Sparse routing trees. Exchanging full routing tree tables provides full topology information; however, the amount of data in the routing tree gets very large, especially for fully connected nets. The number of links in a fully connected net with n nodes is n(n-1)/2. Although full routing trees should be stored by a node, exchanging these routing trees may consume too much bandwidth. A smaller copy of the full routing tree (called a sparse routing tree) should be prepared for transmission to neighbor nodes. To reduce the number of branches in the routing tree, some of the paths to duplicate nodes on the tree are pruned according to following rules:

a. Only the shortest paths from the root node to another node are retained.

b. For redundant paths from a root node to another node which are the same length (same number of links in the routing tree), at most 2 are retained. Some redundancy in paths is necessary for volatile networks.

For the previous example, the path from C to B and C to D would be pruned, since there are already shorter paths from A to C and A to D. The pruning yields the sparse routing tree in Figure 78 and Table LXX.

Downloaded from http://www.everyspec.com

APPENDIX H

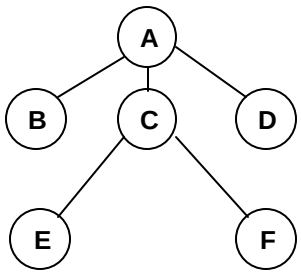

FIGURE 78. Sparse routing tree for node A.

TABLE LXX. Sparse routing tree for node A.

Node Address	Node Predecessor	Hops	Cost	NR	Quiet
B	A	1	1	0	0
C	A	1	1	0	0
D	A	1	1	0	0
E	C	2	1	0	0
F	C	2	1	0	0

The final routing tree for Node A, after all the nodes exchange their sparse routing trees, is shown in Figure 79 and Table LXXI. Note that Figure 79 shows more than 2 paths between nodes G and A and H and A; however, the sparse routing tree table, which is the information actually transmitted, shows only two entries for nodes G and H. The pruning rules stated above have not been violated. They have been applied to the entries in the sparse routing table. The sparse routing graph is deduced from the table. Thus, quite a few redundant paths can be derived from the structure of the sparse routing table.

Downloaded from http://www.everyspec.com

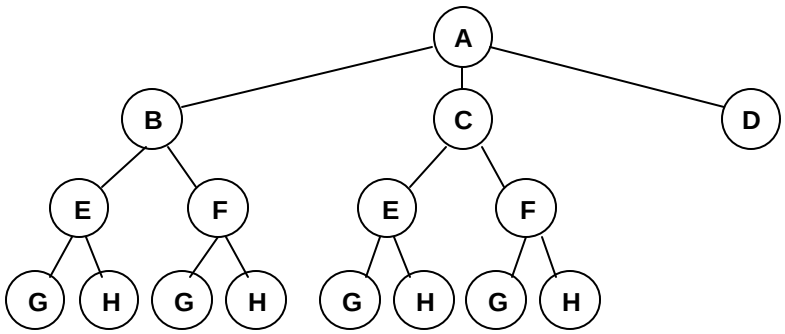

FIGURE 79. Final routing tree for node A.

TABLE LXXI. Final routing tree for node A.

Node Address	Node Predecessor	Hops	Cost	NR	Quiet
B	A	1	1	0	0
C	A	1	1	0	0
D	A	1	1	0	0
E	B	2	1	0	0
F	B	2	1	0	0
E	C	2	1	0	0
F	C	2	1	0	0
G	E	3	1	0	0
H	E	3	1	0	0
G	F	3	1	0	0
H	F	3	1	0	0

H.4.4 Rules for exchanging topology updates. Topology update packets are transmitted exclusively using a global multicast address.

H.4.4.1 Topology update triggers. Topology updates are triggered for node I by the following:

Downloaded from http://www.everyspec.com

a. Node I detects a failed link and the link is to a node that is not a static node (link quality =7)

b. Node I detects a new or recovered link and the link is to a node that is not a static node (link quality =7)

c. Node I detects a change in the quality of a link - applicable only if link costs are used.

d. Node I receives a topology update from another node which modifies its sparse routing tree.

e. Node I changes its Quiet Mode status and wishes to announce this change.

f. Node I changes its relay capability status.

g. Node I receives a topology update request.

H.4.4.2 Sending topology update messages. Optimally, topology updates should be concatenated with other traffic for queuing by the link layer. Topology Update Messages are sent to the global multicast address using Type 1 Unnumbered Information Frames which are not acknowledged. The precedence of the Topology Update Message is user configurable.

The updates should be transmitted no more often than once every MIN_UPDATE_PER. MIN_UPDATE_PER is measured in minutes and is set by the network administrator when the nodes are configured. The network administrator can disable topology update transmission by setting MIN_UPDATE_PER to zero. Update packets are superseded by newer packets if they have not been queued at the link layer.

H.4.5 Non-relayers. In the Topology Update broadcast by non-relayers, the non-relayer indicates its status by setting the NR bit to one in its entry of the Topology Update message. Additionally, the non-relayer includes all one-hop, and only one-hop, neighbors (because relaying by this node is not permitted). Non-relayer nodes remain in the sparse routing trees; however, they shall not have any subsequent branches. Their entries in the routing table shall have the NR bit set to 1.

H.4.6 Quiet nodes. Nodes in the quiet state may appear in the sparse routing tables and in update packets with the QUIET bit set to 1; however, they shall not have any subsequent branches in the routing tree. Nodes wishing to announce that they are entering quiet mode shall add a separate entry into the

Downloaded from http://www.everyspec.com

sparse routing table and update packets with NODE ADDRESS and NODE PREDECESSOR set to their own address and the QUIET bit set to 1.

H.4.7 Topology update request messages. The Topology Update Request Message is triggered whenever there is a mismatch between the topology update ID received from a station and the value that had been stored previously. The Topology Update Request message may also be sent whenever a data link transmission is detected from a previously unknown neighbor. The Topology Update Request message uses a Type 1 Unnumbered Information frame which is not acknowledged and is addressed according to 5.4.1.1.7, 5.4.1.1.9 and 5.4.1.3. The Topology Update Request message is addressed to specific stations at the Intranet layer and may be sent to the global multicast address at the data link layer. The precedence of the Topology Update Request Message is user-configurable. The Topology Update Request Message may be sent no more often than MIN_UPDATE_PER/2. This constant allows up to two requests to be sent to a node while the node is waiting for the MIN_UPDATE_PER timer to expire.

Downloaded from http://www.everyspec.com

APPENDIX I

SOURCE DIRECTED RELAY

I.1 General.

I.1.1 Scope. This appendix describes a procedure for relaying packets across a CNR intranet using source directed routes. The intranet is defined as all processors and CNRs within a single transmission channel.

I.1.2 Application. This appendix is a mandatory part of MIL-STD-188-220. The information contained herein is intended for compliance.

I.2 Applicable Documents. None.

I.3 Problem overview. Intranet relaying is required when nodes in an intranet need to communicate, but are not nearest neighbors capable of hearing one another's radio transmissions.

I.4 Procedure.

I.4.1 Forward routing. Source Directed Relay provides a simple non-dynamic procedure for relaying a packet from an originator to one or more destinations. The source shall calculate the path through the intranet network to reach each destination. These paths are based on the topology and connectivity table. The specific source directed route for each destination shall be encoded into the intranet header. If the routes for two or more destinations share common links along the paths, the two paths should be merged together. As a result of this, the resulting paths should not have any common nodes.

The address of successive relayers, destinations and their associated status bytes are placed in the intranet header in order of progressing through the routing tree. Nodes which are one hop away and destinations only are placed into the Intranet Header first with their DES bit set to 1. The next entries into the Intranet Header are the relay paths which may include nodes which are relayers and destinations. Each relay path starting at the source is completed before another relay path with its origin at the source is begun. Within the status byte for each relayer the REL bit is set to 1 and S/D is set to 0. If the relayer is also a destination in addition to being a relayer, the DES bit is set to 1. If there are multiple destinations that are not relayers following a relayer, each of these destination addresses and their status bytes should be listed in the header after the relay node sequentially in the order of their appearance in the path. Within this group the extension bit within the destination/relay address field is not used. The last address can be determined from the Intranet header length. The last address in a group can be determined from the DIS field of the Destination/Relay Status Byte defined in 5.4.1.1.7.

Downloaded from http://www.everyspec.com

APPENDIX I

All destinations in the relay path that are required to provide end-to-end intranet acknowledgments have set the ACK bit in their status bytes to 1. For all destinations, the **DISTANCE** field is set to the number of hops between the originator and the ultimate destination host for the relay.

I.4.2 End-to-end acknowledgments. End-to-end acknowledgments are formed by the *i*th final destination nodes upon receipt of an intranet header with **ACK** bit set in **DESTINATION STATUS BYTE** for the *i*th destination. The **MESSAGE ID** for the packet to be acknowledged is retained. The message type is set to 1. The path between the originator node and the *i*th destination is reversed. All intermediate destinations are removed. The path will contain one originator, one destination and the relayers. The **DES** bit in the status bytes for all relayers is set to 0, indicating they perform relay only. No data is carried with an end-to-end acknowledgment packet, just the intranet header.

I.5 Examples. To illustrate Source Directed Relay procedures consider the sample network link diagram in Figure 80 and final routing tree in Figure 81. Table LXXII gives specific addresses for the nodes labeled A, B, C, D, E, F, G and H. To maintain consistency with other sections of MIL-STD-188-220, the most significant bit (MSB) is presented to the left of the figures in this appendix.

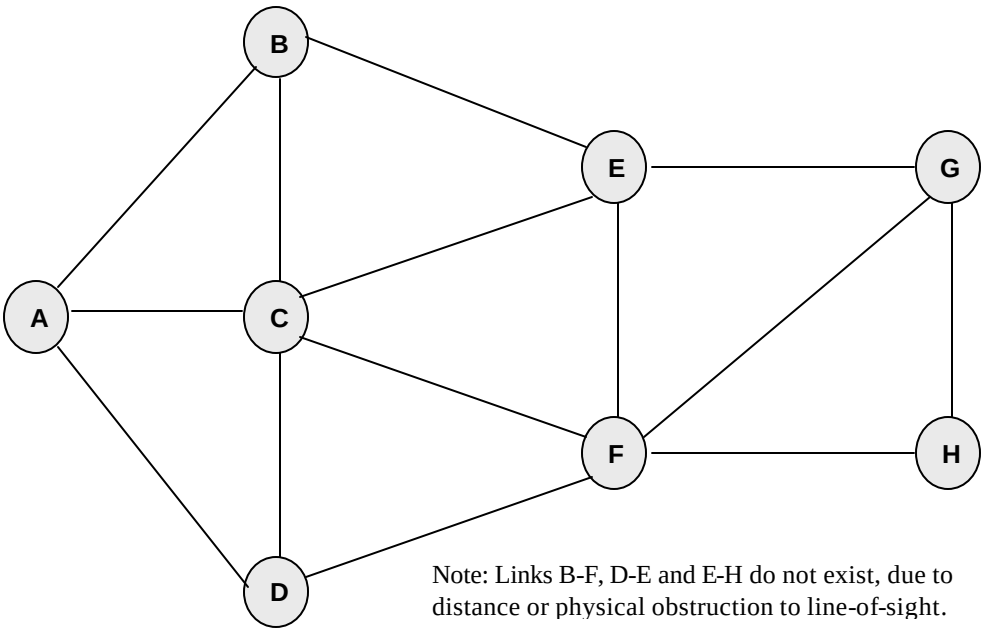

FIGURE 80. Link diagram of a sample network.

Downloaded from http://www.everyspec.com

APPENDIX I

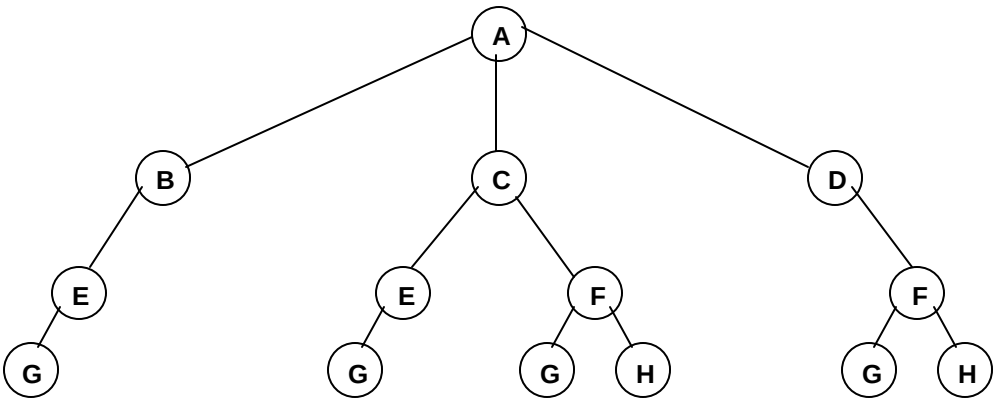

FIGURE 81. Final routing tree for node A.

TABLE LXXII. Sample node addresses.

Node	MSB							LSB	Address
A	0	0	0	1	1	1	1	x	15
B	0	0	0	0	1	0	0	x	4
C	0	0	0	0	1	0	1	x	5
D	0	0	0	0	1	1	0	x	6
E	0	0	0	0	1	1	1	x	7
F	0	0	0	1	0	0	0	x	8
G	0	0	0	1	0	0	1	x	9
H	0	0	0	1	0	1	0	x	10

Downloaded from http://www.everyspec.com

APPENDIX I

I.5.1 Example 1. Assume that node A has a packet bound for node G alone. Node A's Sparse Routing Tree provides the following potential paths to Node G: A-B-E-G, A-C-E-G, A-C-F-G and A-D-F-G. Assuming that all paths have the same quality and cost, any path may be selected by Node A. In this example, path A-B-E-G is selected.

The following values are assigned to the Intranet Header in example 1:

MESSAGE TYPE = 4 (IP Packet)
TYPE_OF_SERVICE = 00000000
MESSAGE ID = 1
MAX_HOP_COUNT = 3 (Distance from node A to node G)
ORIGINATOR ADDRESS = 15 (node A)
STATUS BYTE 1 = 00001001 (ACK=No, DES=No, REL=Yes, DIS=1)
DESTINATION 1 = 4 (node B)
STATUS BYTE 2 = 00001010 (ACK=No, DES=No, REL=Yes, DIS=2)
DESTINATION 2 = 7 (node E)
STATUS BYTE 3 = 01000011 (ACK=No, DES=Yes, REL=No, DIS=3)
DESTINATION 3 = 9 (node G)
HEADER LENGTH = 12 octets

Figure 82 shows the complete Intranet Header for example 1. Note that the LSB in all destination addresses is 0 except for the last destination address (node G).

Downloaded from http://www.everyspec.com

APPENDIX I

7 *MSB*	*6*	*5*	*4*	*3*	*2*	*1*	*0* *LSB*
MESSAGE TYPE				VERSION NUMBER			
0	1	0	0	0	0	0	0
INTRANET HEADER LENGTH							
0	0	0	0	1	1	0	0
TYPE OF SERVICE							
0	0	0	0	0	0	0	0
MESSAGE IDENTIFICATION NUMBER							
0	0	0	0	0	0	0	1
SPARE				MAX HOP COUNT			
0	0	0	0	0	0	1	1
ORIGINATOR ADDRESS							
0	0	0	1	1	1	1	0
DESTINATION/RELAY STATUS BYTE 1							
0	0	0	0	1	0	0	1
DESTINATION/RELAY ADDRESS 1							
0	0	0	0	1	0	0	0
DESTINATION/RELAY STATUS BYTE 2							
0	0	0	0	1	0	1	0
DESTINATION/RELAY ADDRESS 2							
0	0	0	0	1	1	1	0
DESTINATION/RELAY STATUS BYTE 3							
0	1	0	0	0	0	1	1
DESTINATION/RELAY ADDRESS 3							
0	0	0	1	0	0	1	1

FIGURE 82. Example 1 Intranet header.

I.5.2 Example 2. Assume that node A has a packet bound for nodes G and H. Node A's Sparse Routing Tree provides the following potential paths to nodes G and H: A-B-E-G, A-C-E-G, A-C-F-G, A-C-F-H, A-D-F-G and A-D-F-H. Of these potential paths, the most economical choices are those that use node F for relaying: A-C-F-G, A-D-F-G, A-C-F-H and A-D-F-H. Although paths A-B-E-G and A-C-E-G are viable paths to node G, they would unnecessarily increase processing at nodes B and E, and would increase the size of the Intranet Header in this example. In this example the selected paths are A-C-F-G and A-C-F-H.

Downloaded from http://www.everyspec.com

APPENDIX I

The following values are assigned to the Intranet Header in example 2:

MESSAGE TYPE = 4 (IP Packet)
TYPE_OF_SERVICE = 00000000
MESSAGE ID = 2
MAX_HOP_COUNT = 3 (Distance from node A to nodes G and H)
ORIGINATOR ADDRESS = 15 (node A)
STATUS BYTE 1 = 00001001 (ACK=No, DES=No, REL=Yes, DIS=1)
DESTINATION 1 = 4 (node C)
STATUS BYTE 2 = 00001010 (ACK=No, DES=No, REL=Yes, DIS=2)
DESTINATION 2 = 8 (node F)
STATUS BYTE 3 = 01000011 (ACK=No, DES=Yes, REL=No, DIS=3)
DESTINATION 3 = 9 (node G)
STATUS BYTE 4 = 01000011 (ACK=No, DES=Yes, REL=No, DIS=3)
DESTINATION 4 = 10 (node H)
HEADER LENGTH = 14 octets

Figure 83 shows the complete Intranet Header for example 2. Note that the LSB in all destination addresses is 0 except for the last destination address (node H).

Downloaded from http://www.everyspec.com

APPENDIX I

7 *MSB*	*6*	*5*	*4*	*3*	*2*	*1*	*0* *LSB*
MESSAGE TYPE				VERSION NUMBER			
0	1	0	0	0	0	0	0
INTRANET HEADER LENGTH							
0	0	0	0	1	1	1	0
TYPE OF SERVICE							
0	0	0	0	0	0	0	0
MESSAGE IDENTIFICATION NUMBER							
0	0	0	0	0	0	1	0
SPARE				MAX HOP COUNT			
0	0	0	0	0	0	1	1
ORIGINATOR ADDRESS							
0	0	0	1	1	1	1	0
DESTINATION/RELAY STATUS BYTE 1							
0	0	0	0	1	0	0	1
DESTINATION/RELAY ADDRESS 1							
0	0	0	0	1	0	0	0
DESTINATION/RELAY STATUS BYTE 2							
0	0	0	0	1	0	1	0
DESTINATION/RELAY ADDRESS 2							
0	0	0	1	0	0	0	0
DESTINATION/RELAY STATUS BYTE 3							
0	1	0	0	0	0	1	1
DESTINATION/RELAY ADDRESS 3							
0	0	0	1	0	0	1	0
DESTINATION/RELAY STATUS BYTE 4							
0	1	0	0	0	0	1	1
DESTINATION/RELAY ADDRESS 4							
0	0	0	1	0	1	0	1

FIGURE 83. Example 2 Intranet header.

I.5.3 Example 3. In the third example, node A wishes to deliver a packet to nodes D, E, F, G and H. In this case node A again would select the most economical path to each destination, taking into consideration the impacts on network traffic and Intranet header size. Table LXXIII lists the potential and selected paths from node A to each of the intended destinations.

A similar process would be used to select economical paths to relay nodes, such as node C. The shortest path to the most distant nodes G and H are reviewed to determine whether the relay nodes C

Downloaded from http://www.everyspec.com

and F are also destinations. Note that node F is both a destination and a relay while node C is a relay node only.

TABLE LXXIII. Paths used in example 3.

Destination Node	Potential Paths	Selected Path
D	A-D	A-D
E	A-B-E A-C-E	A-C-E
F	A-C-F A-D-F	A-C-F
G	A-B-E-G A-C-E-G A-C-F-G A-D-F-G	A-C-F-G
H	A-C-F-H A-D-F-H	A-C-F-H

Downloaded from http://www.everyspec.com

APPENDIX I

The following values are assigned to the Intranet Header in example 3:

MESSAGE TYPE = 4 (IP Packet)
TYPE_OF_SERVICE = 00000000
MESSAGE ID = 3
MAX_HOP_COUNT = 3 (Distance from node A to nodes G and H)
ORIGINATOR ADDRESS = 15 (node A)
STATUS BYTE 1 = 01000001 (ACK=No, DES=Yes, REL=No, DIS=1)
DESTINATION 1 = 6 (node D)
STATUS BYTE 2 = 00001001 (ACK=No, DES=No, REL=Yes, DIS=1)
DESTINATION 2 = 5 (node C)
STATUS BYTE 3 = 01000010 (ACK=No, DES=Yes, REL=No, DIS=2)
DESTINATION 3 = 7 (node E)
STATUS BYTE 4 = 01001010 (ACK=No, DES=Yes, REL=Yes, DIS=2)
DESTINATION 4 = 8 (node F)
STATUS BYTE 5 = 01000011 (ACK=No, DES=Yes, REL=No, DIS=3)
DESTINATION 5 = 9 (node G)
STATUS BYTE 6 = 01000011 (ACK=No, DES=Yes, REL=No, DIS=3)
DESTINATION 6 = 10 (node H)
HEADER LENGTH = 18 octets

Figure 84 shows the complete Intranet Header for example 3. Note that the LSB in all destination addresses is 0 except for the last destination address (node H).

Downloaded from http://www.everyspec.com

APPENDIX I

7 *MSB*	*6*	*5*	*4*	*3*	*2*	*1*	*0* *LSB*
MESSAGE TYPE				VERSION NUMBER			
0	1	0	0	0	0	0	0
INTRANET HEADER LENGTH							
0	0	0	1	0	0	1	0
TYPE OF SERVICE							
0	0	0	0	0	0	0	0
MESSAGE IDENTIFICATION NUMBER							
0	0	0	0	0	0	1	1
SPARE				MAX HOP COUNT			
0	0	0	0	0	0	1	1
ORIGINATOR ADDRESS							
0	0	0	1	1	1	1	0
DESTINATION/RELAY STATUS BYTE 1							
0	1	0	0	0	0	0	1
DESTINATION/RELAY ADDRESS 1							
0	0	0	0	1	1	0	0
DESTINATION/RELAY STATUS BYTE 2							
0	0	0	0	1	0	0	1
DESTINATION/RELAY ADDRESS 2							
0	0	0	0	1	0	1	0
DESTINATION/RELAY STATUS BYTE 3							
0	1	0	0	0	0	1	0
DESTINATION/RELAY ADDRESS 3							
0	0	0	0	1	1	1	0
DESTINATION/RELAY STATUS BYTE 4							
0	1	0	0	1	0	1	0
DESTINATION/RELAY ADDRESS 4							
0	0	0	1	0	0	0	0
DESTINATION/RELAY STATUS BYTE 5							
0	1	0	0	0	0	1	1
DESTINATION/RELAY ADDRESS 5							
0	0	0	1	0	0	1	0
DESTINATION/RELAY STATUS BYTE 6							
0	1	0	0	0	0	1	1
DESTINATION/RELAY ADDRESS 6							
0	0	0	1	0	1	0	1

FIGURE 84. Example 3 intranet header created by node A (originator).

I.5.4 Relay processing. Although the separate examples 1,2,3 all have diverse paths, they would all require the same number data link information frames for delivery (one). The UI, I or DIA frame would

Downloaded from http://www.everyspec.com

be transmitted to each destination simultaneously. Addressed destinations would perform the required data link layer processing described in 5.3 and pass the information field of the frame to the Intranet layer for further processing.

The Intranet header is scanned for the node's data link layer address. When found, the previous octet - the Destination/Relay Status byte - is inspected. If the Relay bit is not set and the destination bit is set, the data portion following the Intranet header is passed to the next higher protocol layer for further processing. If the Relay bit is set, Relay processing is required. If both the Relay bit and the Destination bit are set, Relay processing is performed before the passing data portion of the frame to the next higher protocol layer for further processing. Relay processing involves the following steps:

a. Scan forward until the relayer node sees its own address.

b. Scan toward the end of the header looking for all nodes whose DES bit is set and whose distance is one hop greater than your own. Terminate the scan when a distance less than or equal to your own or the end of the header is found. Save the addresses.

c. While scanning forward until a hop distance less than or equal to your own is found, find all relay addresses that are one hop away from your address and save these addresses.

d. Remove all duplicate saved addresses and pass the remaining addresses to the data link layer to form a multi-addressed information frame containing the Intranet header and data.

The following sections discuss the relay processing at each of the downstream relayers in Example 3. There are two options when filling out the Intranet Header Address Field at the relay nodes. The relay nodes may copy the Address Field and place it into the relay packet intact or they may delete the addresses which have no impact on forwarding or return of a network layer acknowledgment. If the implementer chooses to leave the address field intact, the address field in Figure 84 is used at every relayer. If the implementer chooses to compress the address field to save transmitted bytes, the following paragraphs dictate the method for compression. There is no interoperability problem regardless of which of these two methods are implemented.

I.5.4.1 Relay processing at node C. Node C is a relay node, but not a destination node. Node C is responsible for relaying the information to nodes E, F, G and H. Node C assigns the following values to the Intranet Header in example 3:

MESSAGE TYPE = 4 (IP Packet)

Downloaded from http://www.everyspec.com

TYPE_OF_SERVICE = 00000000
MESSAGE ID = 3
MAX_HOP_COUNT = 2 (Original MAX_HOP_COUNT - 1)
ORIGINATOR ADDRESS = 15 (node A)
STATUS BYTE 1 = 00001001 (ACK=No, DES=No, REL=Yes, DIS=1)
DESTINATION 1 = 5 (node C)
STATUS BYTE 2 = 01000010 (ACK=No, DES=Yes, REL=No, DIS=2)
DESTINATION 2 = 7 (node E)
STATUS BYTE 3 = 01001010 (ACK=No, DES=Yes, REL=Yes, DIS=2)
DESTINATION 3 = 8 (node F)
STATUS BYTE 4 = 01000011 (ACK=No, DES=Yes, REL=No, DIS=3)
DESTINATION 4 = 9 (node G)
STATUS BYTE 5 = 01000011 (ACK=No, DES=Yes, REL=No, DIS=3)
DESTINATION 5 = 10 (node H)
HEADER LENGTH = 16 octets

Figure 85 shows the complete Intranet Header created by Node C.

I.5.4.2 Relay processing at node F. Node F is both a destination and a relayer with relay responsibilities to nodes G and H. Node F assigns the following values to the Intranet Header in example 3:

MESSAGE TYPE = 4 (IP Packet)
TYPE_OF_SERVICE = 00000000
MESSAGE ID = 3
MAX_HOP_COUNT = 1 (Received MAX_HOP_COUNT - 1)
ORIGINATOR ADDRESS = 15 (node A)
STATUS BYTE 1 = 00001001 (ACK=No, DES=No, REL=Yes, DIS=1)
DESTINATION 1 = 5 (node C)
STATUS BYTE 2 = 01001010 (ACK=No, DES=Yes, REL=Yes, DIS=2)
STATUS BYTE 2 = 8 (node F)
STATUS BYTE 3 = 01000011 (ACK=No, DES=Yes, REL=No, DIS=3)
DESTINATION 3 = 9 (node G)
STATUS BYTE 4 = 01000011 (ACK=No, DES=Yes, REL=No, DIS=3)
DESTINATION 4 = 10 (node H)
HEADER LENGTH = 14 octets

Figure 86 shows the complete Intranet Header created by Node F.

Downloaded from http://www.everyspec.com

APPENDIX I

7 *MSB*	*6*	*5*	*4*	*3*	*2*	*1*	*0* *LSB*
MESSAGE TYPE				VERSION NUMBER			
0	1	0	0	0	0	0	0
INTRANET HEADER LENGTH							
0	0	0	1	0	0	0	0
TYPE OF SERVICE							
0	0	0	0	0	0	0	0
MESSAGE IDENTIFICATION NUMBER							
0	0	0	0	0	0	1	1
SPARE				MAX HOP COUNT			
0	0	0	0	0	0	1	0
ORIGINATOR ADDRESS							
0	0	0	1	1	1	1	0
DESTINATION/RELAY STATUS BYTE 1							
0	0	0	0	1	0	0	1
DESTINATION/RELAY ADDRESS 1							
0	0	0	0	1	0	1	0
DESTINATION/RELAY STATUS BYTE 2							
0	1	0	0	0	0	1	0
DESTINATION/RELAY ADDRESS 2							
0	0	0	0	1	1	1	0
DESTINATION/RELAY STATUS BYTE 3							
0	1	0	0	1	0	1	0
DESTINATION/RELAY ADDRESS 3							
0	0	0	1	0	0	0	0
DESTINATION/RELAY STATUS BYTE 4							
0	1	0	0	0	0	1	1
DESTINATION/RELAY ADDRESS 4							
0	0	0	1	0	0	1	0
DESTINATION/RELAY STATUS BYTE 5							
0	1	0	0	0	0	1	1
DESTINATION/RELAY ADDRESS 5							
0	0	0	1	0	1	0	1

FIGURE 85. Example 3 Intranet header for node C (relay node).

Downloaded from http://www.everyspec.com

APPENDIX I

7 *MSB*	*6*	*5*	*4*	*3*	*2*	*1*	*0* *LSB*
MESSAGE TYPE				VERSION NUMBER			
0	1	0	0	0	0	0	0
INTRANET HEADER LENGTH							
0	0	0	0	1	0	1	0
TYPE OF SERVICE							
0	0	0	0	0	0	0	0
MESSAGE IDENTIFICATION NUMBER							
0	0	0	0	0	0	1	1
SPARE				MAX HOP COUNT			
0	0	0	0	0	0	0	1
ORIGINATOR ADDRESS							
0	0	0	1	1	1	1	0
DESTINATION/RELAY STATUS BYTE 1							
0	0	0	0	1	0	0	1
DESTINATION/RELAY ADDRESS 1							
0	0	0	0	1	0	1	0
DESTINATION/RELAY STATUS BYTE 2							
0	1	0	0	1	0	1	0
DESTINATION/RELAY ADDRESS 2							
0	0	0	1	0	0	0	0
DESTINATION/RELAY STATUS BYTE 3							
0	1	0	0	0	0	1	1
DESTINATION/RELAY ADDRESS 3							
0	0	0	1	0	0	1	0
DESTINATION/RELAY STATUS BYTE 4							
0	1	0	0	0	0	1	1
DESTINATION/RELAY ADDRESS 4							
0	0	0	1	0	1	0	1

FIGURE 86. Example 3 Intranet header created by node F (relay and destination nodes).

Downloaded from http://www.everyspec.com

APPENDIX J

ROBUST COMMUNICATIONS PROTOCOL

J.1 General.

J.1.1 Scope. This Appendix describes the interoperability and technical requirements for the robust communications protocol for DMTD and interfacing C^4I systems (DTEs). This Appendix applies only to HAVEQUICK II compatible systems that require interoperability with radios that do not have data buffering or synchronization capability.

J.1.2 Application. This Appendix is a mandatory part of MIL-STD-188-220. The information contained herein is intended for compliance.

J.2 Applicable Documents. JIEO Specification 9120A.

J.3 Introduction. This physical layer protocol provides the additional processing to aid the transfer of secure and non-secure digital data when concatenated with the link processing of the MIL-STD-188-220 protocol. The additional processing of this protocol allows for a higher level protocol with an error correcting capability equal to rate 1/2 Golay to transfer a burst of data containing up to 67,200 data symbols with better than 90% probability of success in a single transmission, this being over an active HAVEQUICK II compatible link with a random bit error rate of 0.1 or less. The second goal of this physical protocol is for the required performance to be achieved entirely in software using current systems with modest processing capability.

J.3.1 Physical protocol components. Three individually selectable processes are used to meet the performance requirement. The first is the application of rate 1/3 convolutional coding to combat high random bit error rates. The second is a provision for data scrambling. Scrambling at the physical layer is implemented simply as the multiplication of the transmit data with a pseudo random bit pattern. The third is a packetizing scheme that allows for the re-transmission of the data that was lost due to an HAVEQUICK II compatible frequency hop. The re-transmission is performed, and data recovered within the data burst and the data interruption is transparent to the higher-level protocol. This packetizing scheme has been dubbed the multi-dwell protocol because it was formulated to allow a message to be transmitted over multiple HAVEQUICK II compatible hop dwells.

J.3.2 Optional rate 1/3 convolutional coding. The transmitting convolutional encoder generates three output bits for each input information bit. Figure 87 shows an example of the encoding process for a constraint length (K) of 3. The encoder consists of a shift register equal in length to the constraint length. The data to encode is shifted from left to right one bit at a time. After each shift, three output bits are

Downloaded from http://www.everyspec.com

generated using the G1, G2, and G3 polynomials. The three encoded output bits are generated in the G1, G2, and G3 order. The G2 output shall be inverted to provide some data scrambling capability. The convolutional encoding shift register is initialized to a state of zero when a transmission is requested. The first output bits are generated when the shift register contains the first upper layer bit to transmit, followed by all zeros. Upon detection of the robust synchronization pattern, the Viterbi decoder is initialized to make use of the knowledge of the initial encoder shift register state.

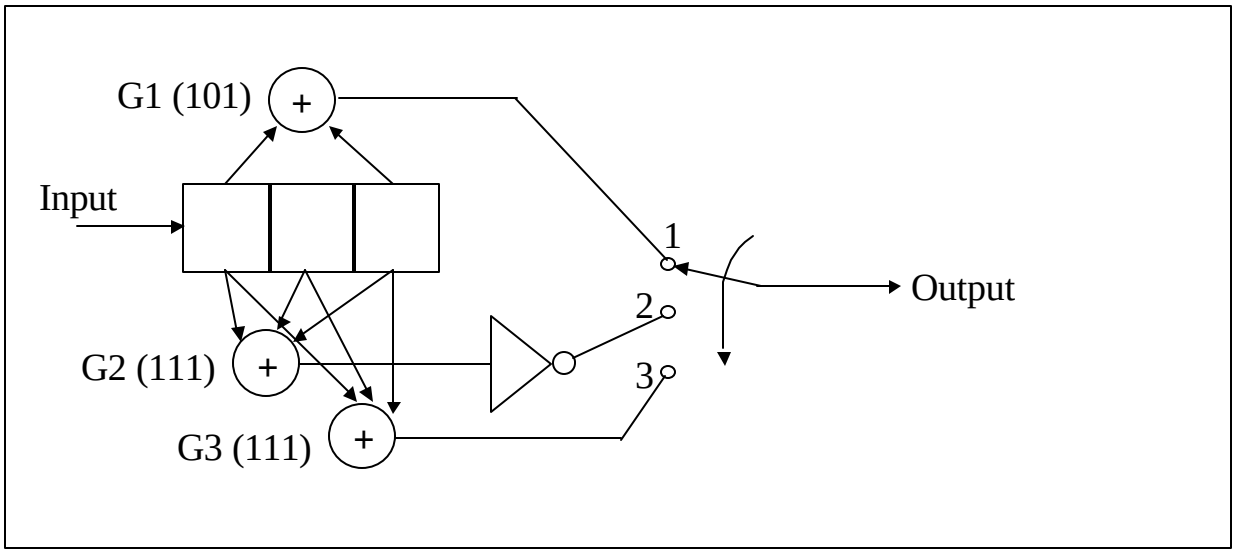

FIGURE 87. Convolutional encoder with inverted G2 K=3.

Table LXXIV lists the generator polynomials used for the three specified constraint lengths. The MSBs of the octal representation of each polynomial are used for each polynomial.

TABLE LXXIV. Convolutional coding generator polynomials (octal).

Constraint Length	G1	G2	G3
3	5	7	7
5	52	66	76
7	554	624	764

Downloaded from http://www.everyspec.com

APPENDIX J

Figure 88 shows the relative error correcting capability of rate 1/3 convolutional coding in a random error environment using the Viterbi decoding algorithm with hard decisions. The performance was achieved using a trace back buffer length of 16, 32, and 64 for constraint lengths 3, 5, and 7 respectively. If the demodulator and decoder are components of the same subsystem, soft decision information from the demodulator can be used to further enhance the performance.

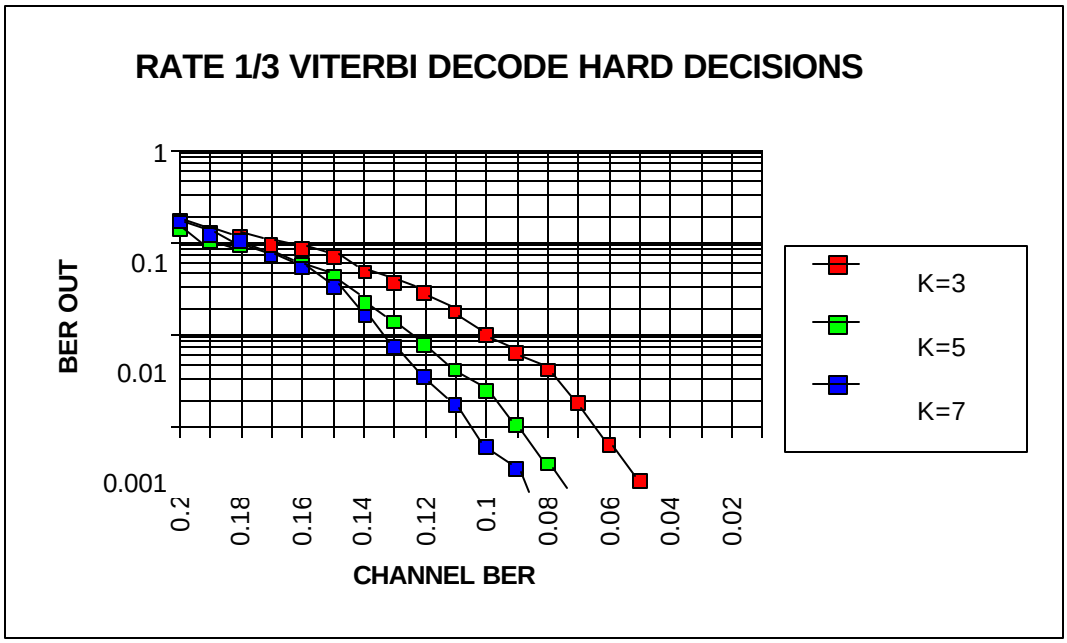

FIGURE 88. Rate 1/3 convolutional coding performance for constraint lengths 3, 5, and 7.

J.3.3 Optional data scrambling. Physical layer data scrambling shall use the pseudo random bit generator specified in CCITT V.33 Annex A. The shift register shall be initialized to all zeros before the first bit of data is scrambled on transmission. On data reception, the descrambler shift register shall be initialized to zero before the first received data bit is descrambled. Figure 89 shows the structure of the data scrambler and descrambler.

Downloaded from http://www.everyspec.com

APPENDIX J

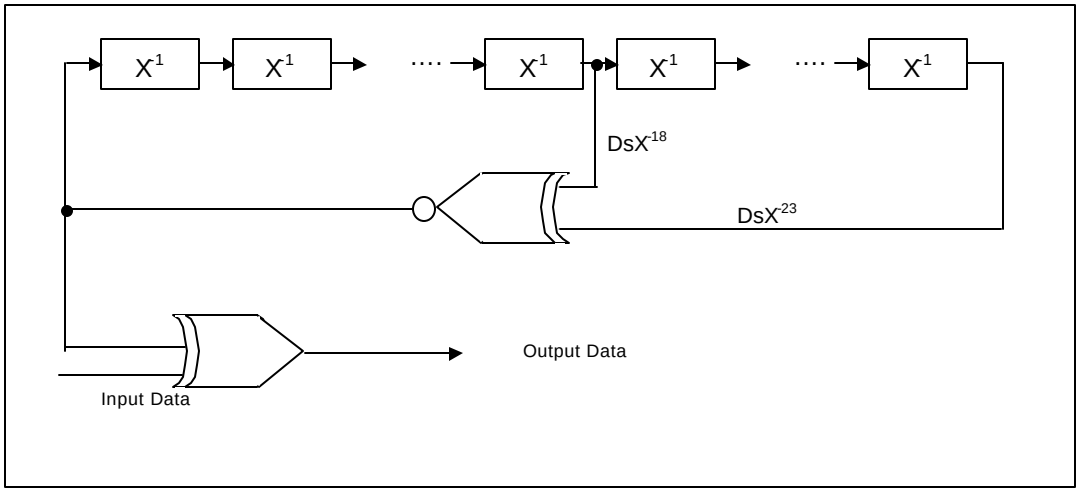

FIGURE 89. Data scrambler structure.

J.3.4 Optional robust multi-dwell.

J.3.4.1 Multi-dwell packet format. When the HAVEQUICK II compatible radio is in active mode, multi-dwell packetizing shall be enabled. The multi-dwell packetizing described in this appendix assumes a physical level bit rate of 16 kbps. The format of each multi-dwell packet is shown in Figure 90. Each packet consists of a start of packet (SOP) pattern and a segment counter followed by 6, 11 or 13 64-bit data segments.

J.3.4.2 Multi-dwell SOP field. The SOP pattern is a 32-bit (Figure 91) or 64-bit (Figure 92) pattern used for multi-dwell packet detection. The maximum number of bits in error should be set to match the bit error rate environment. For normal operation, it is recommended that the maximum number of bits in error be set to 13 for a 64-bit pattern, and to 3 for a 32-bit pattern. The length of the SOP pattern shall be determined by bits two, three and four of the robust frame format.

Downloaded from http://www.everyspec.com

APPENDIX J

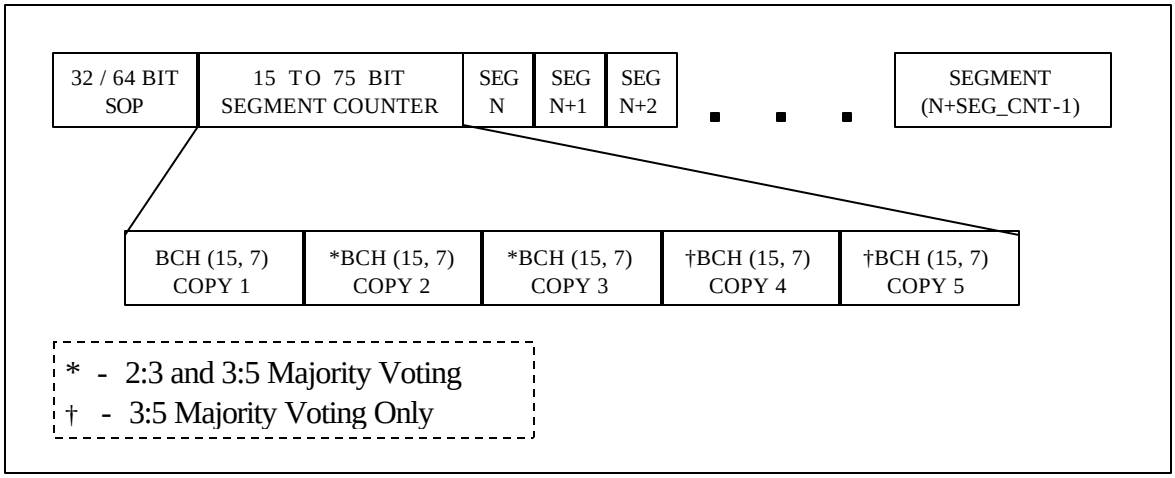

FIGURE 90. Multi-dwell packet.

MSB	LSB
1011101100110101011111100000100101100001010011110100011100100101	

FIGURE 91. Multi-dwell 64-bit SOP pattern.

MSB	LSB
01110101110010010000100111000000	

FIGURE 92. Multi-dwell 32-bit SOP pattern.

J.3.4.3 Multi-dwell segment count field. The segment counter is a modulo 64 count of the first segment in the packet. The six required bits shall be encoded as 1, 3, or 5 BCH (15,7) codewords depending on bits 2, 3 and 4 of the robust frame format. The six-bit segment counter shall occupy the 6 LSBs of the seven-bit BCH data field. The MSB of the data field shall be used as an end-of-frame flag which, when set, indicates that data transmission is complete. A multi-dwell packet marked with an end-of-frame flag shall contain only the SOP pattern and the segment count field used to make the segment number of the first fill data segment transmitted in the previous packet. If no fill data is included in the previous segment, the segment count field shall point to the last segment data plus one.

Downloaded from http://www.everyspec.com

J.3.4.4 Multi-dwell data segments. Each multi-dwell packet shall contain 6, 11 or 13 consecutive 64-bit data segments. Unless a channel interruption is detected during the transmission of the packet, each data segment shall contain the next 64 bits supplied by the data link layer for transmission. The last multi-dwell packet shall contain pad bits and segments as necessary to complete the packet. The transmitted pad data shall be an alternating one/zero sequence.

J.3.4.5 Multi-dwell hop detection. The physical layer shall have the means of detecting or predicting communications link outages.

J.3.4.6 Multi-dwell transmit processing. Data received from the data link layer for transmission shall be broken into 64 bit segments for transmission. The data shall be packetized as stated in J.3.4.1. Packets shall be transmitted consecutively with the segment count field containing the count, modulo 64, of the first segment in the packet until a communications link outage is detected, at which time, the remainder of the data segments in the currently transmitted packet shall be filled with an alternating one/zero pattern. The alternating one/zero pattern shall start soon enough to prevent a receiver from detecting a SOP header and segment count that would prematurely release segments that have been corrupted by a frequency hop. If the configurable hop recovery time (HRT), is greater than the time remaining to complete the transmission of the current packet, the alternating one/zero sequence shall be extended to the end of the HRT period. If a hop is detected during the multi-dwell SOP field, multi-dwell segment count field, or during the transmission of the first two segments, the entire multi-dwell packet shall be retransmitted. The first multi-dwell packet transmitted in a frame shall not contain the multi-dwell SOP field or multi-dwell segment count field. It is assumed that the segment count of the first packet is zero. The SOP and the segment count field shall not be transmitted during a possible frequency hop. The implementation shall develop an algorithm to establish when possible frequency hops may occur and adjust the timing of the data transmission to avoid transmitting a header during any possible hop. Refer to 3.3.4.6 (Code Generator) of JIEO Specification 9120A for guidance on developing a frequency hopping prediction algorithm.

J.3.4.6.1 Hop data recovery time period. A configurable variable called the HRT shall be used to determine if the fill data transmitted following a hop shall be extended to ensure that the following multi-dwell synchronization field can be received. The HRT is defined as the time period from the beginning of the transmitting radio frequency (RF) synthesizer frequency hop to the time that the bit synchronizer connected to the receiving radio can reliably demodulate data. Because different hop detection/prediction methods flag the hop at different times relative to the beginning of the transmitting RF synthesizer frequency slew, the configured HRT shall be internally adjusted to insure that different DTEs in a network can all use the same configurable HRT.

Downloaded from http://www.everyspec.com

APPENDIX J

J.3.4.6.2 Data transmitted after a hop. The multi-dwell packet transmitted directly following a communications link outage shall retransmit data starting with the 64-bit segment preceding the segment that was being transmitted when the hop was detected plus sufficient segments to account for the transmitter pipeline delay if appropriate. If the radios are allowed to drift without being resynchronized by time of day (TOD) transfer or GPS reference it may also be necessary to repeat additional segments assuming that the transmitter is running slower than the receiver(s). Assuming a worst-case drift of 1 ppm in opposite directions, the transmitter may have to repeat on additional segment for each additional half hour (3.6 msec) of drift.

J.3.4.6.3 Termination of transmission. After the final packet of the frame is transmitted, without a hop detected during a data segment containing actual data (not fill data), data transmission shall be terminated. To prevent receive delays caused by the receiver not being able to determine that the last data segment has been received, a truncated multi-dwell packet shall be sent with the end-of-frame flag set. The segment count associated with the end-of-frame flag shall mark the first fill data segment transmitted. If no fill data is included in the previous segment, the segment count field shall point to the last segment data plus one. Figure 93 depicts two examples of the last packet transmitted. In the first case, only three segments are included in the last frame of data (segments 100, 101, and 102) with the first segment being segment number 100. In this scenario, the segment header following the last frame to contain data will have the "last frame flag" bit set, and the segment counter will point to segment 103. In the second example, all the segments in the frame contain data (segment 100 through 105). The segment header following the last frame containing data will have the "last frame flag" bit set and the segment counter will point to segment 106. Note: In both examples, the TP timer shall be recalculated based upon reception of the last bit of the segment counter of the truncated multi-dwell packet.

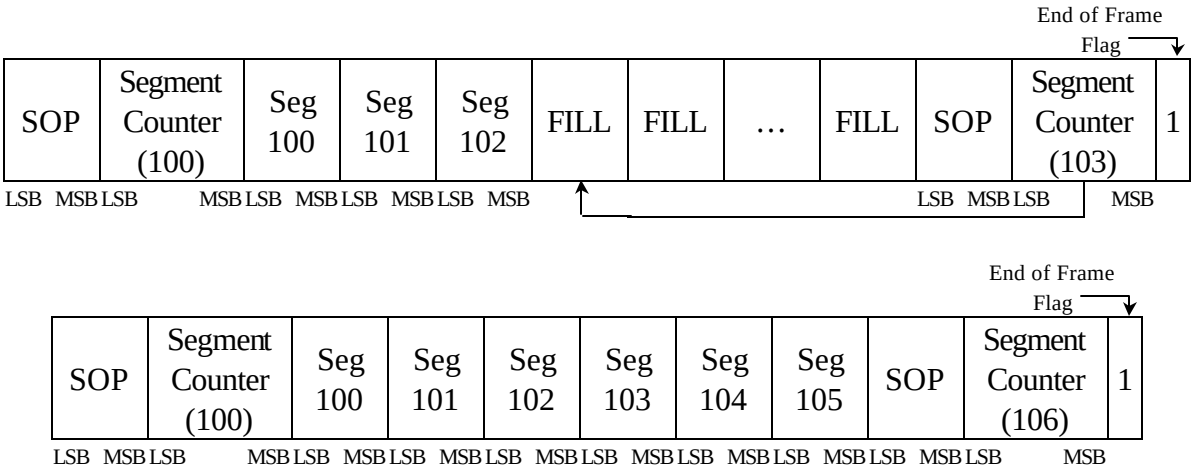

FIGURE 93. Two transmission examples.

Downloaded from http://www.everyspec.com

J.3.4.7 Multi-dwell receive processing. If the multi-dwell flag was set in the robust synchronization field, the receiver shall buffer the multi-dwell data packet. The segment count for the first multi-dwell packet in a frame shall be assumed to be zero. After the last packet bit is received, the receiver shall open the SOP correlation window. When the SOP pattern is recognized, the segment count shall be decoded using the combination of majority and BCH decoding specified in the robust synchronization field. After each new segment count is decoded, the buffered data for data segments lower in count than the new segment count are passed on to the next higher layer as received bits. The segments of the newly received packet are then buffered and held until it is verified that the buffered segments will not be re-transmitted.

J.3.4.7.1 Receive end-of-frame detection. The data remaining in the multi-dwell receive data buffer shall be provided to the higher-level protocol when an end-of-frame condition is detected. The end-of-frame condition shall be determined by the multi-dwell end-of-frame flag. If the end-of-frame flag is not detected before bit synchronization is lost then all buffered packets shall be released to the upper level protocol for receive processing.

J.3.4.7.2 Optional soft decision information. When there is a very high link BER, a SOP pattern may not be recognized or the segment count may not be correctable. If fewer than three consecutive segment counts cannot be corrected the correct number of bits shall be supplied to the upper level protocol as to not cause a bit slip, and consequently, the loss of the remaining data in the frame. If additional forward error correction is used with multi-dwell, it is suggested that soft decision information is supplied indicating the low quality of the received data resulting from a missed SOP pattern or an unrecoverable segment count.

J.3.4.8 Multi-dwell majority logic overhead choice. The choice of the amount of multi-dwell majority voting (MV) overhead is dependent on the expected link BER. Table LXXV gives an estimate of the maximum random BER supported for a 90% probability of passing a single frame of length 1536 bits, 7680 bits, and 67,200 bits with no errors introduced due to multi-dwell processing.

TABLE LXXV. Maximum supported BER.

Segment Count MV	1536	7680	67,200
1 out of 1	0.055	0.03	0.016
2 out of 3	0.14	0.11	0.07
3 out of 5	0.2	0.14	0.12

Downloaded from http://www.everyspec.com

J.3.4.9 Multi-dwell overhead. The multi-dwell protocol introduces an overhead that shall be considered in the network timing calculations. The overhead is a function of the radio hop rate, the multi-dwell segment count majority voting choice, and the message length. Table LXXVI gives the equation to calculate the actual worst-case realized data rate for each hop rate and majority logic combination. The numbers in Table LXXVI were run with a HRT of 15.625 msec, a maximum radio timing drift over a 1/2 hour period, an instantaneous data rate of 16000 bits/second. The actual efficiency will depend upon the exact implementation, therefore the numbers in Table LXXVI should be used as a guide only. The six-segment multi-dwell packet shall be used for protocol acknowledgments and other single TDC block messages. The calculated realized data rate shall be used for the bit rate of all data encapsulated by the multi-dwell protocol.

TABLE LXXVI. Multi-dwell overhead.

HOP RAT	Multi-dwell overhead calculation			
	MV 1:1, 11 segments	MV 2:3, 13 segments	MV 3:5, 13	MV 3:5, 6 segments
0	$R/((0.3*10^{(-L*.00003)})+1.06)$	$R/((0.3*10^{(-L*.00003)})+1.16)$	$R/((0.2*10^{(-L*.00003)})+1.17)$	$R/((0.1*10^{(-L*.00003)})+1.36)$
1	$R/((0.6*10^{(-L*.00003)})+1.10)$	$R/((0.6*10^{(-L*.00003)})+1.21)$	$R/((.55*10^{(-L*.00003)})+1.23)$	$R/((0.3*10^{(-L*.00003)})+1.40)$
2	$R/((0.5*10^{(-L*.00003)})+1.15)$	$R/((0.5*10^{(-L*.00003)})+1.27)$	$R/((0.7*10^{(-L*.00003)})+1.30)$	$R/((0.4*10^{(-L*.00005)})+1.48)$
3	$R/((0.5*10^{(-L*.00003)})+1.20)$	$R/((0.4*10^{(-L*.00002)})+1.36)$	$R/((0.8*10^{(-L*.00003)})+1.29)$	$R/((0.2*10^{(-L*.00003)})+1.56)$
4	R/(1.45)	R/(1.51)	$R/((0.7*10^{(-L*.00002)})+1.46)$	$R/((.07*10^{(-L*.00002)})+1.85)$
ALL	R/(1.72)	R/(1.72)	R/(1.96)	R/(2.27)

R = the instantaneous data rate
L = the number of bits to be transmitted

J.3.4.9.1 Terminals lacking hop detection. The ALL case in Table LXXVI is to show the efficiency of the multi-dwell protocol in systems where the hop cannot be detected due to hardware or software limitations. Since there is no hop timing information available, the DTE shall assume that the radio will hop at every possible time slot. In these systems, it is assumed that timing synchronization with the radio will be made by the detection of the falling edge of the radio delayed push to talk (DPTT) signal provided by the HAVEQUICK II compatible radio. However, the efficiency of systems that cannot detect and predict hops in HAVEQUICK II networks will severely limit the data throughput of those

Downloaded from http://www.everyspec.com

networks. Therefore, all DMTDs shall implement the capabilities to detect radio hops by monitoring the hop synch output signal from the HAVEQUICK II radio.

J.3.5 Robust communications protocol network timing. The use of the robust communications protocol requires modification to some of the Appendix C Type 1 network timing equations. The bit rate, transmit delays, and receive processing delays are modified by the robust protocol. For purposes of robust network timing, two system bit rates are defined. The first is the channel bit rate which is represented as n_c. The second is the data link bit rate which is represented as n_l. As an example, if rate 1/3 convolutional coding is applied at the physical layer and the channel bit rate is 16 kbps, the link bit rate would be 5.33 kbps. In this example, an external cryptographic device would transmit the MI field at n_c Hz and an internal cryptographic device would transmit the MI field at n_l Hz. The multi-dwell reduction of n_l is not deterministic but is bounded. The average multi-dwell n_l is a function of the multi-dwell packet format, the timing of the DTE transmit request in relation to the radio transmission security (TRANSEC) timing, and the number of bits to be transmitted. The following Type 1 network access control subfunctions are specified in Appendix C:

a. network busy sensing

b. response hold delay (RHD)

c. timeout period (TP)

d. network access delay (NAD)

The following subparagraphs address required modifications to network timing equations associated with these subfunctions as a result of using the robust communications protocol.

J.3.5.1 Net busy sensing. Because net busy sensing is performed at the physical level, there are no modifications to the net busy sensing timing or methods when using the robust communications protocol. However, users should be aware that equipment preamble times (EPRE) are much longer for COMSEC operation to account for the COMSEC delays when using HAVEQUICK II. The longer equipment preamble time will result in a significantly longer net busy detect time for COMSEC operation with HAVEQUICK II than for plain text operation with HAVEQUICK II.

J.3.5.2 Response hold delay. The additional transmission time required for the Type 1 coupled acknowledgement due to the robust protocol and the TRANSEC delays are accounted for by inflating the response transmission time parameter (S) and the EPRE delay, contained in the RHD timing equation for RHD_0. Normally, a receiver is able to determine the length of a received message by decoding the

Downloaded from http://www.everyspec.com

robust frame format and message headers to determine the robust frame format and whether the message is using FEC or TDC and adjusting the transmit word count accordingly. For coupled responses, this information will be known ahead of time in order to reserve sufficient time for each response. Therefore, if it cannot be guaranteed that the entire acknowledgement can be transmitted on a single hop dwell all robust Type 1 coupled acknowledgements shall use the robust frame format 3 (MV 3:5, 6 segments). It should be noted that a multi-dwell format shall be used unless it is known that the current dwell is "long" because it cannot be assumed that network ELAG and HRT will allow a non multi-dwell acknowledgement on the shortest HAVEQUICK II dwell. All other characteristics of the response that will affect its length (e.g. FEC, TDC) are determined by the network configuration and shall be the same for all users. In cases where the dwell length is not know, additional TRANSEC delays shall be accounted for by assuming the worst-case frequency hopping (Hop_All). In this case, each hop incurs a HRT delay plus a penalty for backing up and retransmitting two segments of data. From Appendix C, the RHD_0 is calculated as follows:

$$RHD_0 = EPRE + PHASING + S + ELAG + TURN + TOL$$

The actual value of S for acknowledgments is heavily dependent on the network HRT and the ability of the transmitting node to detect or predict hops. Worst-case S times for HRT values up to 25 msec for the six acknowledgment cases assuming the Hop_All case are given in Table LXXVII. These approximate times, rounded to the nearest 5 msec, can be made much shorter in more optimum implementations.

TABLE LXXVII. Multi-dwell acknowledgment times for Hop_All assumption.

ACK TYPE	S Value
80 bit no convolutional coding	100 msec
168 bit no convolutional coding	100 msec
384 bit no convolutional coding	160 msec
80 bit convolutional coding	225 msec
168 bit convolutional coding	225 msec
384 bit convolutional coding	350 msec

Downloaded from http://www.everyspec.com

APPENDIX J

The maximum wait time before beginning any transmission is the maximum initial wait (one Hop_All interval) plus one hop recovery time for a final S time of:

$$S = S + (\text{Hop\_All period}) + HRT$$

J.3.5.2.1 Multi-dwell response. Where multi-dwell is used to send the original message at a channel bit rate, n_c, of 16 Kbps, all responses (Type 1 acknowledgments) will be forced to use the robust frame format 3 (MV 3:5, 6 segments) as noted above unless the DTE knows that a single hop dwell will hold the entire acknowledgment. All nodes in a network shall use the configured EPRE value to determine if there will be a "long" dwell in which to transmit acknowledgments to determine which acknowledgment method to use for that network. A multi-dwell acknowledgment is always required when using an external crypto device.

J.3.5.2.2 Response transmission example. Figure 94 shows an example of the timing of an acknowledgment when an external cryptographic device is used with the HAVEQUICK II radio. The falling edge of the DPTT signal marks the beginning of a long hop dwell that is long enough to contain the crypto preamble time.

After the crypto has finished transmitting the MI field, the transmitting DTE begins to supply data for transmission. Typically, the COMSEC bit synchronization time is not very accurate and may be long enough to push the MI field to the end of the guaranteed "long" dwell time. For this reason, the DTE shall wait to start data transmission on the first hop dwell following the long guaranteed dwell. The end of the guaranteed hop dwell is marked by the first possible hop following the DPTT. The first bit of the robust start of message (SOM) pattern is transmitted after the configured HRT. During the transmission of the response, one or more hops may occur. When the response transmission is complete, the DTE de-asserts the transmit request signal. The radio will de-assert DPTT after a variable delay (ET_1) at a time synchronized with the hop sequence. After DPTT is de-asserted, the radio RF output remains active and a radio hop will not occur. This allows for the transmission of the crypto postamble. The radio RF output remains active for longer than is required for the transmission of the crypto postamble, which is shown as the ET_2 time period in Figure 94. For HAVEQUICK II radios, ET_1, crypto postamble PLUS ET_2 equals the transmitter turnaround time, ($TTURN = ET_1 + ET_2$), as defined in Appendix C.

Downloaded from http://www.everyspec.com

APPENDIX J

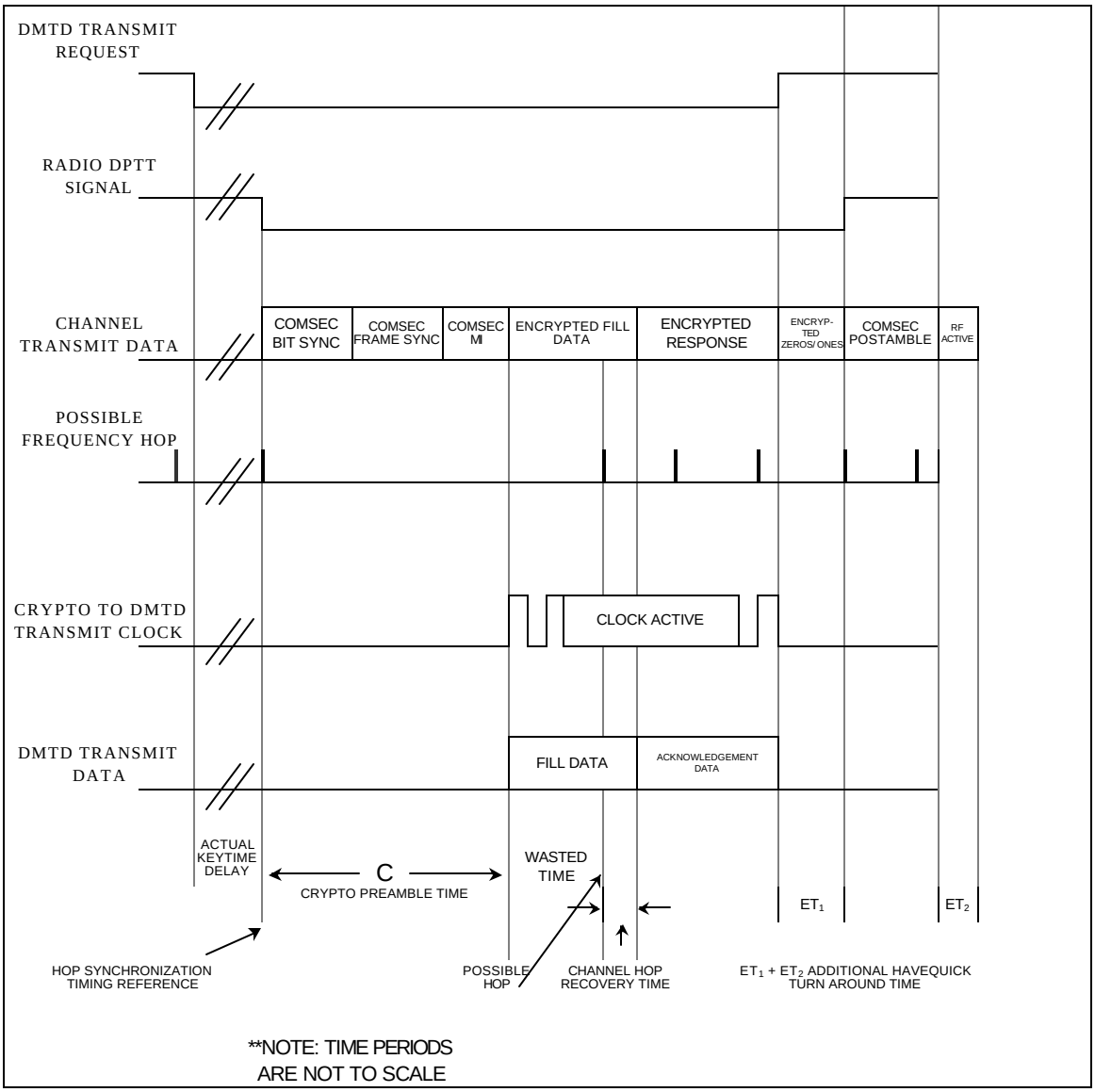

FIGURE 94. HAVEQUICK II external crypto acknowledgment transmission.

J.3.5.2.3 Estimation of multi-dwell n_l. Figure 95 shows an example of the n_l data rate for a multi-dwell transmission with a channel data rate of 16 kbps. This is the worst case data rate reduction which would be experienced with rate 1/3 convolutional coding, a 64 bit SOP pattern length, and 3 out of 5 majority

Downloaded from http://www.everyspec.com

logic decoding of the segment count field for the specified HRT. The data rate shown Figure 95 is the number of link bits to transmit divided by the number of channel bits transmitted times the n_c. Since rate 1/3 convolutional encoding is used in this example, the maximum link data rate achievable would be 5.33 kbps. For short messages, the radio hop timing at the beginning of the transmission has a significant impact on the transmission efficiency. This example uses 13 segments per packet which is the recommended segment per packet count for long transmissions using 3 out of 5 majority logic. This figure and the equations given in Table LXXVI are given as an aid for network throughput estimation and should not be used for network timing. The bit rate estimating equation used in Figure 89 is:

$$\text{link rate} = nc / (0.5*10^{(-\text{link bits} * .00003)} + 1.301)$$

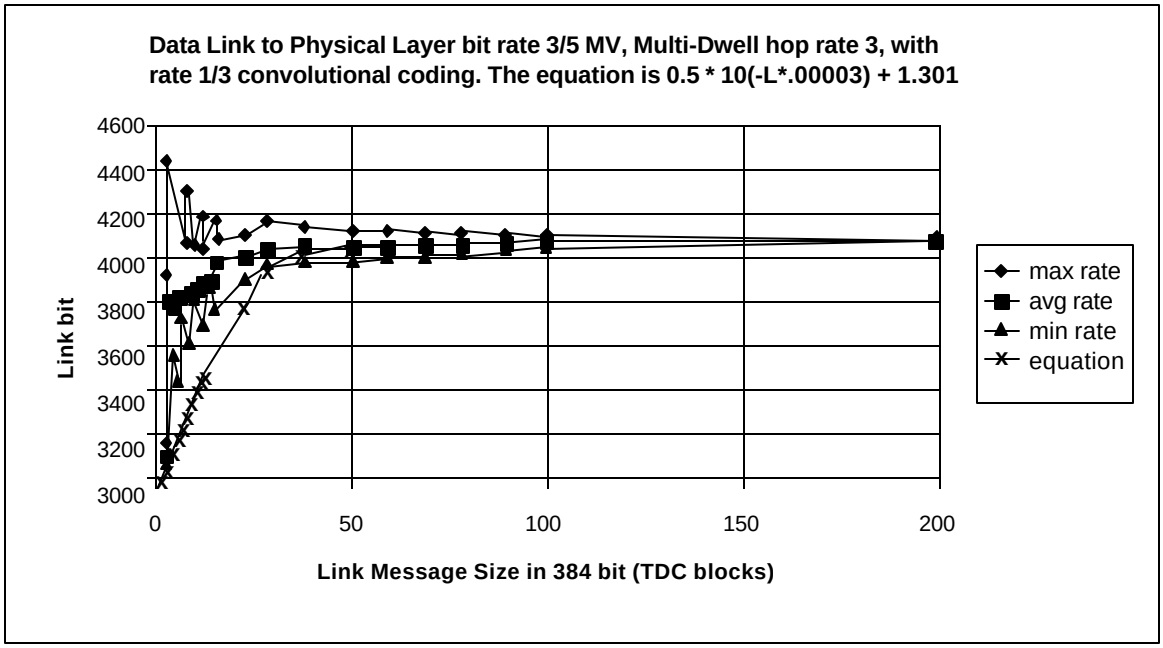

FIGURE 95. Link data rate as a function of message size.

J.3.5.2.4 Receive processing delays. In order to calculate the reference point for the RHD and TP timers, the receiving DTE shall know the time of arrival of the last bit of the transmission. In order to do this, the data link layer normally determines the last bit of the transmission after decoding the word count and tags the arrival of the last data bit from the physical layer. The physical layer receive delays are dependent on the DTE hardware and software implementation. The two delay components are processing delays and data pipeline delays. The processing delays are independent of the received data

Downloaded from http://www.everyspec.com

rate and the pipeline delays are dependent on the data rate. The data rate of all non-multi-dwell transmissions is known to be either n_c or $n_c/3$ dependent on the use of rate 1/3 convolutional coding. The received data rate of a multi-dwell transmission is not known. For this reason, when a multi-dwell transmission is received, the physical layer shall tag the time of arrival of the final multi-dwell bit. The physical layer can determine the time of arrival of the last bit by using the end-of-frame flag which is the MSB in the final multi-dwell segment count field. A logical signal from the physical layer to the data link layer indicating the message completion time is required to insure that the transmitter and receiver(s) use the same reference point for the calculation of RHD and TP.

The trace back buffer length of the Viterbi decoder introduces a known pipeline delay in the received data that will be accounted for in the network ELAG. The length of the trace back buffer is an implementation choice which is dependent on the Viterbi decoder architecture. Pipeline delay is the time needed to flush the trace back buffer.

J.3.5.3 Timeout period (TP). The timeout period is derived from the same equations as described in Appendix C. Modifications to the timeout period are the result of changes to RHD_0 and DTE receive processing delays, which have been addressed in J.3.5.2 and its subparagraphs.

J.3.5.4 Network access delay (NAD). There are no modifications to the network timing equations associated network access delay. The network access delay is always an integer number times the Net_Busy_Detect_Time which, as previously discussed, has not been modified but could be significantly longer due to extended equipment preamble times, especially for COMSEC operation with HAVEQUICK II.

J.3.6 Application guidance for the HAVEQUICK II link.

J.3.6.1 Frequency hop synchronization. The HAVEQUICK II TRANSEC timing and the DTE network timing are not synchronized. To avoid the loss of critical data, such as the cryptographic synchronization and/or the protocol SOM patterns, the DTE transmission timing shall be synchronized to the frequency hops through use of hop detection and prediction.

J.3.7 Summary. The physical layer robust protocol introduces additional transmit and receive delays due to the robust header and the convolutional decoding pipeline delays. Multi-dwell packetizing introduces a data rate reduction which varies widely for short transmissions. The HAVEQUICK II radio introduces variable delays in the keytime delay and the equipment turn-around time. To maintain network timing using the Type 1 timing equations, the RHD shall be extended by inflating the S time for a fixed Type 1 acknowledgment transmit frame format for multi-dwell operation assuming the worst case

Downloaded from http://www.everyspec.com

hop rate (Hop_All). Since the message transmission time is variable, the time-out period (TP) sync point shall be figured from the final frame flag at the end of the transmission.

J.4 PDU construction. The following examples shall be used to clarify robust PDU transmission order and processing order (i.e. scrambling, FEC, and formation of packets). The input to the robust protocol is a 188-220 DL PDU. The DL PDU is user data to the N-1 layer (i.e. robust protocol). In this example, the MSB (2^n bit) of each octet of user data and the MSB of each control field is represented with an italicized font.

J.4.1 Robust PDU header. The robust protocol consists of three parts: (1) frame synchronization and setting of the robust frame format, (2) scrambling and/or FEC of the user data according to the robust frame format, and (3) inserting of SOPs and segment counters to form packets when the multi-dwell flag is set (the multi-dwell flag is part of the robust frame format field). When the robust frame format selects both scrambling and FEC encoding, the user data is scrambled before the user data is FEC encoded. The scrambling and FEC encoding is only applied to the user data.

J.4.2 User data. In this example, the LSB of each octet passed from the data shall be transmitted first. However, in the following examples the user data is not a real DL PDU which reduces coupling between changes in the 188-220 frame and this example. The example user data is an array of octets counting down 49 – 0.

J.4.3 Multi-dwell flag set. When the multi-dwell flag is set, the robust frame synchronization field and robust frame format shall be inserted. Scrambling and/or FEC shall be applied to the user data if selected in the robust frame format. The user data shall be put into packets by inserting SOPs and segment counters (BCH [15,7] shall be applied to the segment counters according to the selected multi-dwell transmission format). An example of the robust transmission via multi-dwell transmission format 3 (MV 3:5, 6 segments), no scrambling, no FEC encoding, and without a hop occurring is in Table LXXVIII.

Downloaded from http://www.everyspec.com

APPENDIX J

TABLE LXXVIII. Robust protocol example with multi-dwell flag set.

Field Name	Length (bits)	Value (Dec)	Value (Binary)	Field Fragments	Octet Value (Binary)	Octet Value (Hex)	Octet Number
			MSB 2^n LSB 2^0	MSB 2^7 LSB 2^0	MSB 2^7 LSB 2^0		
Robust Frame Syn	64		*0*0011100 01111010 10110110 01000000 11111101 10110111 00110011 10010010		10010010 00110011 10110111 11111101 01000000 10110110 01111010 *0*0011100	0x92 0x33 0xB7 0xFD 0x40 0xB6 0x7A 0x1C	0 1 2 3 4 5 6 7
1 of 5							
Multi-dwell Flag	1	1	*1*	xxxxxxx*1*			
Scrambling	1	0 (no scramble)	*0*	xxxxxx*0*x			
Multi-dwell Tx Format	3	3	*0*11	xxx*0*11xx			
Convolution Coding Constraint length	2	3 (disabled)	*1*1	x*1*1xxxxx			
BCH(15,7)	8		*1*0110110	0xxxxxxx x*1*011011	0*1*101*1*01	0x6D	8
2 of 5							
Multi-dwell Flag	1	1	*1*	*1*xxxxxxx	*1*1011011	0xDB	9
Scrambling	1	0	*0*	xxxxxxx*0*			
Multi-dwell Tx Format	3	3	*0*11	xxxx*0*11x			
Convolution Coding Constraint length	2	3	*1*1	xx*1*1xxxx			
BCH(15,7)	8		*1*0110110	10xxxxxx xx*1*01101	10*1*10110	0xB6	10
3 of 5							
Multi-dwell Flag	1	1	*1*	x*1*xxxxxx			

Downloaded from http://www.everyspec.com

APPENDIX J

TABLE LXXVIII. Robust protocol example with multi-dwell flag set. – Continued.

Field Name	Length (bits)	Value (Dec)	Value (Binary)	Field Fragments	Octet Value (Binary)	Octet Value (Hex)	Octet Number
			MSB 2^n LSB 2^0	MSB 2^7 LSB 2^0	MSB 2^7 LSB 2^0		
Scrambling	1	0	*0*	0xxxxxxx	0*11*01101	0x6D	11
Multi-dwell Tx Format	3	3	*0*11	xxxxx*0*11			
Convolution Coding Constraint length	2	3	*1*1	xxx*1*1xxx			
BCH(15,7)	8		*1*0110110	110xxxxx xxx*1*0110	110*11*011	0xDB	12
4 of 5							
Multi-dwell Flag	1	1	*1*	xx*1*xxxxx			
Scrambling	1	0	*0*	x*0*xxxxxx			
Multi-dwell Tx Format	3	3	*0*11	1xxxxxxx xxxxxx*0*1	1*011*0110	0xB6	13
Convolution Coding Constraint length	2	3	*1*1	xxxx*1*1xx			
BCH(15,7)	8		*1*0110110	0110xxxx xxxx*1*011	0110*11*01	0x6D	14
5 of 5							
Multi-dwell Flag	1	1	*1*	xxx*1*xxxx			
Scrambling	1	0	*0*	xx*0*xxxxx			
Multi-dwell Tx Format	3	3	*0*11	11xxxxxx xxxxxxx*0*	11*011*011	0xDB	15
Convolution Coding Constraint length	2	3	*1*1	xxxxx*1*1x			
BCH(15,7)	8		*1*0110110	10110xxx xxxxx*1*01	10110*110*	0xB6	16
User data octet 1 (seg 0)	8	49	*0*0110001	10001xxx xxxxx*0*01	10001101	0x8D	17

Downloaded from http://www.everyspec.com

APPENDIX J

TABLE LXXVIII. Robust protocol example with multi-dwell flag set. – Continued.

Field Name	Length (bits)	Value (Dec)	Value (Binary)	Field Fragments	Octet Value (Binary)	Octet Value (Hex)	Octet Number
			MSB 2^n LSB 2^0	MSB 2^7 LSB 2^0	MSB 2^7 LSB 2^0		
User data octet 2 (seg 0)	8	48	*0*0110000	10000xxx xxxxx*0*01	10000*0*01	0x81	18
User data octet 3 (seg 0)	8	47	*0*0101111	01111xxx xxxxx*0*01	01111001	0x79	19
User data octet 4 (seg 0)	8	46	*0*0101110	01110xxx xxxxx*0*01	01110*0*01	0x71	20
User data octet 5 (seg 0)	8	45	*0*0101101	01101xxx xxxxx*0*01	01101*0*01	0x69	21
User data octet 6 (seg 0)	8	44	*0*0101100	01100xxx xxxxx*0*01	01100*0*01	0x61	22
User data octet 7 (seg 0)	8	43	*0*0101011	01011xxx xxxxx*0*01	01011*0*01	0x59	23
User data octet 8 (seg 0)	8	42	*0*0101010	01010xxx xxxxx*0*01	01010*0*01	0x51	24
User data octet 9 (seg 1)	8	41	*0*0101001	01001xxx xxxxx*0*01	01001*0*01	0x49	25
User data octet 10 (seg 1)	8	40	*0*0101000	01000xxx xxxxx*0*01	01000*0*01	0x41	26
User data octet 11 (seg 1)	8	39	*0*0100111	00111xxx xxxxx*0*01	00111*0*01	0x39	27
User data octet 12 (seg 1)	8	38	*0*0100110	00110xxx xxxxx*0*01	00110*0*01	0x31	28
User data octet 13 (seg 1)	8	37	*0*0100101	00101xxx xxxxx*0*01	00101*0*01	0x29	29
User data octet 14 (seg 1)	8	36	*0*0100100	00100xxx xxxxx*0*01	00100*0*01	0x21	30
User data octet 15 (seg 1)	8	35	*0*0100011	00011xxx xxxxx*0*01	00011*0*01	0x19	31
User data octet 16 (seg 1)	8	34	*0*0100010	00010xxx xxxxx*0*01	00010*0*01	0x11	32

Downloaded from http://www.everyspec.com

APPENDIX J

TABLE LXXVIII. Robust protocol example with multi-dwell flag set. – Continued.

Field Name	Length (bits)	Value (Dec)	Value (Binary)	Field Fragments	Octet Value (Binary)	Octet Value (Hex)	Octet Number
			MSB 2^n LSB 2^0	MSB 2^7 LSB 2^0	MSB 2^7 LSB 2^0		
User data octet 17 (seg 2)	8	33	*0*0100001	00001xxx xxxxx*0*01	00001*0*01	0x09	33
User data octet 18 (seg 2)	8	32	*0*0100000	00000xxx xxxxx*0*01	00000*0*01	0x01	34
User data octet 19 (seg 2)	8	31	*0*0011111	11111xxx xxxxx*0*00	11111*0*01	0xF9	35
User data octet 20 (seg 2)	8	30	*0*0011110	11110xxx xxxxx*0*00	11110*0*00	0xF0	36
User data octet 21 (seg 2)	8	29	*0*0011101	11101xxx xxxxx*0*00	11101*0*00	0xE8	37
User data octet 22 (seg 2)	8	28	*0*0011100	11100xxx xxxxx*0*00	11100*0*00	0xE0	38
User data octet 23 (seg 2)	8	27	*0*0011011	11011xxx xxxxx*0*00	11011*0*00	0xD8	39
User data octet 24 (seg 2)	8	26	*0*0011010	11010xxx xxxxx*0*00	11010*0*00	0xD0	40
User data octet 25 (seg 3)	8	25	*0*0011001	11001xxx xxxxx*0*00	11001*0*00	0xC8	41
User data octet 26 (seg 3)	8	24	*0*0011000	11000xxx xxxxx*0*00	11000*0*00	0xC0	42
User data octet 27 (seg 3)	8	23	*0*0010111	10111xxx xxxxx*0*00	10111*0*00	0xB8	43
User data octet 28 (seg 3)	8	22	*0*0010110	10110xxx xxxxx*0*00	10110*0*00	0xB0	44
User data octet 29 (seg 3)	8	21	*0*0010101	10101xxx xxxxx*0*00	10101*0*00	0xA8	45
User data octet 30 (seg 3)	8	20	*0*0010100	10100xxx xxxxx*0*00	10100*0*00	0xA0	46
User data octet 31 (seg 3)	8	19	*0*0010011	10011xxx xxxxx*0*00	10011*0*00	0x98	47

Downloaded from http://www.everyspec.com

APPENDIX J

TABLE LXXVIII. Robust protocol example with multi-dwell flag set. – Continued.

Field Name	Length (bits)	Value (Dec)	Value (Binary)	Field Fragments	Octet Value (Binary)	Octet Value (Hex)	Octet Number
			MSB 2^n LSB 2^0	MSB 2^7 LSB 2^0	MSB 2^7 LSB 2^0		
User data octet 32 (seg 3)	8	18	*0*0010010	10010xxx xxxxx*000*	10010*000*	0x90	48
User data octet 33 (seg 4)	8	17	*0*0010001	xxx10001 xxxxx*000*	10001*000*	0x88	49
User data octet 34 (seg 4)	8	16	*0*0010000	10000xxx xxxxx*000*	10000*000*	0x80	50
User data octet 35 (seg 4)	8	15	*0*0001111	01111xxx xxxxx*000*	01111*000*	0x78	51
User data octet 36 (seg 4)	8	14	*0*0001110	xxx01110 xxxxx*000*	01110*000*	0x70	52
User data octet 37 (seg 4)	8	13	*0*0001101	01101xxx xxxxx*000*	01101*000*	0x68	53
User data octet 38 (seg 4)	8	12	*0*0001100	01100xxx xxxxx*000*	01100*000*	0x60	54
User data octet 39 (seg 4)	8	11	*0*0001011	01011xxx xxxxx*000*	01011*000*	0x58	55
User data octet 40 (seg 4)	8	10	*0*0001010	01010xxx xxxxx*000*	01010*000*	0x50	56
User data octet 41 (seg 5)	8	9	*0*0001001	01001xxx xxxxx*000*	01001*000*	0x48	57
User data octet 42 (seg 5)	8	8	*0*0001000	01000xxx xxxxx*000*	01000*000*	0x40	58
User data octet 43 (seg 5)	8	7	*0*0000111	00111xxx xxxxx*000*	00111*000*	0x38	59
User data octet 44 (seg 5)	8	6	*0*0000110	00110xxx xxxxx*000*	00110*000*	0x30	60
User data octet 45 (seg 5)	8	5	*0*0000101	00101xxx xxxxx*000*	00101*000*	0x28	61
User data octet 46 (seg 5)	8	4	*0*0000100	00100xxx xxxxx*000*	00100*000*	0x20	62

Downloaded from http://www.everyspec.com

APPENDIX J

TABLE LXXVIII. Robust protocol example with multi-dwell flag set. – Continued.

Field Name	Length (bits)	Value (Dec)	Value (Binary)	Field Fragments	Octet Value (Binary)	Octet Value (Hex)	Octet Number
			MSB 2^n LSB 2^0	MSB 2^7 LSB 2^0	MSB 2^7 LSB 2^0		
User data octet 47 (seg 5)	8	3	*0*0000011	00011xxx xxxxx*00*0	00011*00*0	0x18	63
User data octet 48 (seg 5)	8	2	*0*0000010	00010xxx xxxxx*00*0	00010*00*0	0x10	64
SOP	64		*1*0111011 00110101 01111110 00001001 01100001 01001111 01000111 00100101	00101xxx 00111001 01111010 00001010 01001011 11110000 10101011 11011001 xxxxx*1*01	00101*00*0 00111001 01111010 00001010 01001011 11110000 10101011 11011001	0x28 0x39 0x7A 0x0A 0x4B 0xF0 0xAB 0xD9	65 66 67 68 69 70 71 72
Segment Counter BCH 1 of 5							
Segment Counter	6	6	*0*00110	00110xxx xxxxxxx*0*	00110*1*01	0x35	73
Segment Counter Final Seg Flag	1	0	*0*	xxxxxx*0*x			
Segment Counter BCH	8		*0*1110010	110010xx xxxxxx*0*1	11001*00*	0xC8	74
Segment Counter BCH 2 of 5							
Segment Counter	6	6	*0*00110	*0*00110xx	*0*00110*0*1	0x19	75
Segment Counter Final Seg Flag	1	0	*0*	xxxxxxx*0*			
Segment Counter BCH	8		*0*1110010	1110010x xxxxxxxx*0*	11100*10*	0xE4	76
Segment Counter BCH 3 of 5							
Segment Counter	6	6	*0*00110	x*0*00110x			

Downloaded from http://www.everyspec.com

APPENDIX J

TABLE LXXVIII. Robust protocol example with multi-dwell flag set. – Continued.

Field Name	Length (bits)	Value (Dec)	Value (Binary)	Field Fragments	Octet Value (Binary)	Octet Value (Hex)	Octet Number
			MSB 2^n LSB 2^0	MSB 2^7 LSB 2^0	MSB 2^7 LSB 2^0		
Segment Counter Final Seg Flag	1	0	*0*	*0*xxxxxxx	*00*001100	0x0C	77
Segment Counter BCH	8		*0*1110010	*0*1110010	*0*1110010	0x72	78
Segment Counter BCH 4 of 5							
Segment Counter	6	6	*0*00110	xx*0*00110			
Segment Counter Final Seg Flag	1	0	*0*	x*0*xxxxxx			
Segment Counter BCH	8		*0*1110010	0xxxxxxx x*0*111001	0*00*00110	0x06	79
Segment Counter BCH 5 of 5							
Segment Counter	6	6	*0*00110	0xxxxxxx xxx*0*0011	0*0*111001	0x39	80
Segment Counter Final Seg Flag	1	0	*0*	xx*0*xxxxx			
Segment Counter BCH	8		*0*1110010	10xxxxxx xx*0*11100	10*00*0011	0x83	81
User data octet 49 (seg 6)	8	1	*0*0000001	01xxxxxx xx*0*00000	01*0*11100	0x5C	82
User data octet 50 (seg 6)	8	0	*0*0000000	00xxxxxx xx*0*00000	00*0*00000	0x00	83
Fill (seg 6)	8		*0*1010101	01xxxxxx xx*0*10101	01000000	0x40	84
Fill (seg 6)	8		01010101	01xxxxxx xx*0*10101	01*0*10101	0x55	85
Fill (seg 6)	8		01010101	01xxxxxx xx*0*10101	01*0*10101	0x55	86

Downloaded from http://www.everyspec.com

APPENDIX J

TABLE LXXVIII. Robust protocol example with multi-dwell flag set. – Continued.

Field Name	Length (bits)	Value (Dec)	Value (Binary)	Field Fragments	Octet Value (Binary)	Octet Value (Hex)	Octet Number
			MSB 2^n LSB 2^0	MSB 2^7 LSB 2^0	MSB 2^7 LSB 2^0		
Fill (seg 6)	8		01010101	01xxxxxx xx*0*10101	01*0*10101	0x55	87
Fill (seg 6)	8		01010101	01xxxxxx xx*0*10101	01*0*10101	0x55	88
Fill (seg 6)	8		01010101	01xxxxxx xx*0*10101	01*0*10101	0x55	89
Fill (seg 7)	8		01010101	01xxxxxx xx*0*10101	01*0*10101	0x55	90
Fill (seg 7)	8		01010101	01xxxxxx xx*0*10101	01*0*10101	0x55	91
Fill (seg 7)	8		01010101	01xxxxxx xx*0*10101	01*0*10101	0x55	92
Fill (seg 7)	8		01010101	01xxxxxx xx*0*10101	01*0*10101	0x55	93
Fill (seg 7)	8		01010101	01xxxxxx xx*0*10101	01*0*10101	0x55	94
Fill (seg 7)	8		01010101	01xxxxxx xx*0*10101	01*0*10101	0x55	95
Fill (seg 7)	8		01010101	01xxxxxx xx*0*10101	01*0*10101	0x55	96
Fill (seg 7)	8		01010101	01xxxxxx xx*0*10101	01*0*10101	0x55	97
Fill (seg 8)	8		01010101	01xxxxxx xx*0*10101	01*0*10101	0x55	98
Fill (seg 8)	8		01010101	01xxxxxx xx*0*10101	01*0*10101	0x55	99
Fill (seg 8)	8		01010101	01xxxxxx xx*0*10101	01*0*10101	0x55	100
Fill (seg 8)	8		01010101	01xxxxxx xx*0*10101	01*0*10101	0x55	101

Downloaded from http://www.everyspec.com

APPENDIX J

TABLE LXXVIII. Robust protocol example with multi-dwell flag set. – Continued.

Field Name	Length (bits)	Value (Dec)	Value (Binary)	Field Fragments	Octet Value (Binary)	Octet Value (Hex)	Octet Number
			MSB 2^n LSB 2^0	MSB 2^7 LSB 2^0	MSB 2^7 LSB 2^0		
Fill (seg 8)	8		01010101	01xxxxxx xx*0*10101	01*0*10101	0x55	102
Fill (seg 8)	8		01010101	01xxxxxx xx*0*10101	01*0*10101	0x55	103
Fill (seg 8)	8		01010101	01xxxxxx xx*0*10101	01*0*10101	0x55	104
Fill (seg 8)	8		01010101	01xxxxxx xx*0*10101	01*0*10101	0x55	105
Fill (seg 9)	8		01010101	01xxxxxx xx*0*10101	01*0*10101	0x55	106
Fill (seg 9)	8		01010101	01xxxxxx xx*0*10101	01*0*10101	0x55	107
Fill (seg 9)	8		01010101	01xxxxxx xx*0*10101	01*0*10101	0x55	108
Fill (seg 9)	8		01010101	01xxxxxx xx*0*10101	01*0*10101	0x55	109
Fill (seg 9)	8		01010101	01xxxxxx xx*0*10101	01*0*10101	0x55	110
Fill (seg 9)	8		01010101	01xxxxxx xx*0*10101	01*0*10101	0x55	111
Fill (seg 9)	8		01010101	01xxxxxx xx*0*10101	01*0*10101	0x55	112
Fill (seg 9)	8		01010101	01xxxxxx xx*0*10101	01*0*10101	0x55	113
Fill (seg 10)	8		01010101	01xxxxxx xx*0*10101	01*0*10101	0x55	114
Fill (seg 10)	8		01010101	01xxxxxx xx*0*10101	01*0*10101	0x55	115
Fill (seg 10)	8		01010101	01xxxxxx xx*0*10101	01*0*10101	0x55	116

Downloaded from http://www.everyspec.com

APPENDIX J

TABLE LXXVIII. Robust protocol example with multi-dwell flag set. – Continued.

Field Name	Length (bits)	Value (Dec)	Value (Binary)	Field Fragments	Octet Value (Binary)	Octet Value (Hex)	Octet Number
			MSB LSB 2^n 2^0	MSB LSB 2^7 2^0	MSB LSB 2^7 2^0		
Fill (seg 10)	8		01010101	01xxxxxx xx*0*10101	01*0*10101	0x55	117
Fill (seg 10)	8		01010101	01xxxxxx xx*0*10101	01*0*10101	0x55	118
Fill (seg 10)	8		01010101	01xxxxxx xx*0*10101	01*0*10101	0x55	119
Fill (seg 10)	8		01010101	01xxxxxx xx*0*10101	01*0*10101	0x55	120
Fill (seg 10)	8		01010101	01xxxxxx xx*0*10101	01*0*10101	0x55	121
Fill (seg 11)	8		01010101	01xxxxxx xx*0*10101	01*0*10101	0x55	122
Fill (seg 11)	8		01010101	01xxxxxx xx*0*10101	01*0*10101	0x55	123
Fill (seg 11)	8		01010101	01xxxxxx xx*0*10101	01*0*10101	0x55	124
Fill (seg 11)	8		01010101	01xxxxxx xx*0*10101	01*0*10101	0x55	125
Fill (seg 11)	8		01010101	01xxxxxx xx*0*10101	01*0*10101	0x55	126
Fill (seg 11)	8		01010101	01xxxxxx xx*0*10101	01*0*10101	0x55	127
Fill (seg 11)	8		01010101	01xxxxxx xx*0*10101	01*0*10101	0x55	128
Fill (seg 11)	8		01010101	01xxxxxx xx*0*10101	01*0*10101	0x55	129

Downloaded from http://www.everyspec.com

APPENDIX J

TABLE LXXVIII. Robust protocol example with multi-dwell flag set. – Continued.

Field Name	Length (bits)	Value (Dec)	Value (Binary)	Field Fragments	Octet Value (Binary)	Octet Value (Hex)	Octet Number
			MSB 2^n LSB 2^0	MSB 2^7 LSB 2^0	MSB 2^7 LSB 2^0		
SOP	64		*1*0111011 00110101 01111110 00001001 01100001 01001111 01000111 00100101	01xxxxxx 11001001 11010001 01010011 01011000 10000010 01011111 11001101 xx*1*01110	01*0*10101 11001001 11010001 01010011 01011000 10000010 01011111 11001101	0x55 0xC9 0xD1 0x53 0x58 0x82 0x5F 0xCD	130 131 132 133 134 135 136 137
Segment Counter BCH 1 of 5							
Segment Counter	6	7	*0*00111	11xxxxxx xxxx*0*001	11*1*01110	0xEE	138
Segment Counter Final Seg Flag	1	1	*1*	xxx*1*xxxx			
Segment Counter BCH	8		*1*1101110	110xxxxx xxx*1*1101	110*1*0001	0xD1	139
Segment Counter BCH 2 of 5							
Segment Counter	6	7	*0*00111	111xxxxx xxxxx*0*00	111*1*1101	0xFD	140
Segment Counter Final Seg Flag	1	1	*1*	xxxx*1*xxx			
Segment Counter BCH	8		*1*1101110	1110xxxx xxxx*1*110	*1*110*1*000	0xE8	141
Segment Counter BCH 3 of 5							
Segment Counter	6	7	*0*00111	0111xxxx xxxxxx*0*0	0111*1*110	0x7E	142
Segment Counter Final Seg Flag	1	1	*1*	xxxxx*1*xx			

Downloaded from http://www.everyspec.com

APPENDIX J

TABLE LXXVIII. Robust protocol example with multi-dwell flag set. – Continued.

Field Name	Length (bits)	Value (Dec)	Value (Binary)	Field Fragments	Octet Value (Binary)	Octet Value (Hex)	Octet Number
			MSB 2^n LSB 2^0	MSB 2^7 LSB 2^0	MSB 2^7 LSB 2^0		
Segment Counter BCH	8		*1*1101110	01110xxx xxxxx*1*11	01110*10*0	0x74	143
Segment Counter BCH 4 of 5							
Segment Counter	6	7	*0*00111	00111xxx xxxxxxx*0*	00111*1*11	0x3F	144
Segment Counter Final Seg Flag	1	1	*1*	xxxxxx*1*x			
Segment Counter BCH	8		*1*1101110	101110xx xxxxxx*1*1	10111*0*0	0xBA	145
Segment Counter BCH 5 of 5							
Segment Counter	6	7	*0*00111	*0*00111xx	*0*0011*1*1	0x1F	146
Segment Counter Final Seg Flag	1	1	*1*	xxxxxxx*1*			
Segment Counter BCH	8		*1*1101110	1101110x xxxxxxx*1*	1101110*1* xxxxxxx*1*	0xDD	147 148

J.4.4 Multi-dwell flag not set. When the multi-dwell flag is zero the data shall not be put into packets. Only the robust frame synchronization field and robust frame format shall be inserted and scrambling and/or FEC shall be applied to the user data (see Table LXXIX).

Downloaded from http://www.everyspec.com

APPENDIX J

TABLE LXXIX. Robust protocol example with multi-dwell flag not set.

Field Name	Length (bits)	Value (Dec)	Value (Binary)	Field Fragments	Octet Value (Binary)	Octet Value (Hex)	Octet Number
			MSB 2^n LSB 2^0	MSB 2^7 LSB 2^0	MSB 2^7 LSB 2^0		
Robust Frame Syn	64		*0*0011100 01111010 10110110 01000000 11111101 10110111 00110011 10010010		10010010 00110011 10110111 11111101 01000000 10110110 01111010 *0*0011100	0x92 0x33 0xB7 0xFD 0x40 0xB6 0x7A 0x1C	0 1 2 3 4 5 6 7
1 of 5							
Multi-dwell Flag	1	0	*0*	xxxxxxx*0*			
Scrambling	1	1 (scramble)	*1*	xxxxxx*1*x			
Multi-dwell Tx Format	3	0 (N/A)	*0*00	xxx*0*00xx			
Convolution Coding Constraint length	2	3 (disabled)	*1*1	x*1*1xxxxx			
BCH(15,7)	8		*0*1101011	1xxxxxxx x*0*110101	1*1*1000*1*0	0xE2	8
2 of 5							
Multi-dwell Flag	1	0	*0*	*0*xxxxxxx	*0*0110101	0x35	9
Scrambling	1	1	*1*	xxxxxxx*1*			
Multi-dwell Tx Format	3	0	*0*00	xxxx*0*00x			
Convolution Coding Constraint length	2	3	*1*1	xx*1*1xxxx			
BCH(15,7)	8		*0*1101011	11xxxxxx xx*0*11010	11*1*10001	0xF1	10
3 of 5							
Multi-dwell Flag	1	0	*0*	x*0*xxxxxx			

Downloaded from http://www.everyspec.com

APPENDIX J

TABLE LXXIX. Robust protocol example with multi-dwell flag not set. – Continued.

Field Name	Length (bits)	Value (Dec)	Value (Binary)	Field Fragments	Octet Value (Binary)	Octet Value (Hex)	Octet Number
			MSB 2^n LSB 2^0	MSB 2^7 LSB 2^0	MSB 2^7 LSB 2^0		
Scrambling	1	1	*1*	*1*xxxxxxx	*10*011010	0x9A	11
Multi-dwell Tx Format	3	0	*0*00	xxxxx*0*00			
Convolution Coding Constraint length	2	3	*1*1	xxx*1*1xxx			
BCH(15,7)	8		*0*1101011	011xxxxx xxx*0*1101	01111000	0x78	12
4 of 5							
Multi-dwell Flag	1	0	*0*	xx*0*xxxxx			
Scrambling	1	1	*1*	x*1*xxxxxxx			
Multi-dwell Tx Format	3	0	*0*00	0xxxxxxx xxxxxx*0*0	0*100*1101	0x4D	13
Convolution Coding Constraint length	2	3	*1*1	xxxx*1*1xx			
BCH(15,7)	8		*0*1101011	1011xxxx xxxx*0*110	1011*110*0	0xBC	14
5 of 5							
Multi-dwell Flag	1	0	*0*	xxx*0*xxxx			
Scrambling	1	1	*1*	xx*1*xxxxx			
Multi-dwell Tx Format	3	0	*0*00	00xxxxxx xxxxxxx*0*	00*100*110	0x26	15
Convolution Coding Constraint length	2	3	*1*1	xxxxx*1*1x			
BCH(15,7)	8		*0*1101011	01011xxx xxxxx*0*11	01011*110*	0x5E	16
User data octet 1	8	49	*0*0110001 *	10001xxx xxxxx*0*01	10001*0*11	0x8B	17

Downloaded from http://www.everyspec.com

APPENDIX J

TABLE LXXIX. Robust protocol example with multi-dwell flag not set. – Continued.

Field Name	Length (bits)	Value (Dec)	Value (Binary)	Field Fragments	Octet Value (Binary)	Octet Value (Hex)	Octet Number
			MSB LSB 2^n 2^0	MSB LSB 2^7 2^0	MSB LSB 2^7 2^0		
….							
User data octet 50	8	0	*0*0000000 *	00000xxx xxxxx*0*00			66 67

*Note: User data not scrambled for clarity

Downloaded from http://www.everyspec.com

APPENDIX K

BOSE - CHAUDHURI - HOCQUENGHEM (15, 7) CODING ALGORITHM

K.1 General.

K.1.1 Scope. This appendix describes a linear block cyclic code capable of correcting any combination of two or fewer errors in a block of 15 bits.

K.1.2 Application. This appendix is a conditionally mandatory part of MIL-STD-188-220. It is mandatory for implementing the Robust Communications Protocol described in Appendix J.

K.2 Applicable documents. This section is not applicable to this appendix.

K.3 BCH (15,7) code. The BCH (15,7) code is a linear, block, cyclic, BCH code capable of correcting any combination of two or fewer errors in a block of 15 bits. The generator polynomial for this code is

$$g(x) = 1 + X^4 + X^6 + X^7 + X^8$$

where g(x) is a factor of $X^{15} + 1$

K.3.1 Hardware encoding. BCH (15, 7) encoding can be performed with an 8 stage feedback shift register with feedback connections selected according to the coefficients of g(x). A shift register corresponding to the coefficients of g(x) and containing the shifted information digits is shown in Figure 96. Suppose that a 7-bit message is to be encoded:

Information vector $\mathbf{m} = (m_0\ m_1\ m_2\ m_3\ m_4\ m_5\ m_6)$

Information polynomial $m(x) = m_0 + m_1 x + m_2 x^2 + m_3 x^3 + m_4 x^4 + m_5 x^5 + m_6 x^6$

m_6 is the first digit to be shifted into the register. The horizontal right arrow illustrates its shifting direction to the right. And the vertical down arrows illustrate their positions of the feedback connections. The m_6 near the horizontal right arrow on the right illustrates the shifted out digit and feedback digit. The eight (8) parity check digits:

$$r(x) = r_0 + r_1x + r_2x^2 + r_3x^3 + r_4x^4 + r_5x^5 + r_6x^6 + r_7x^7$$

With the seven (7) information digits, $x^8\ m(x)$ makes a complete code word:

Downloaded from http://www.everyspec.com

$$v(x) = r(x) + x^8 m(x)$$

Therefore, the m_6 bit is used as LSB and the first bit to be transmitted.

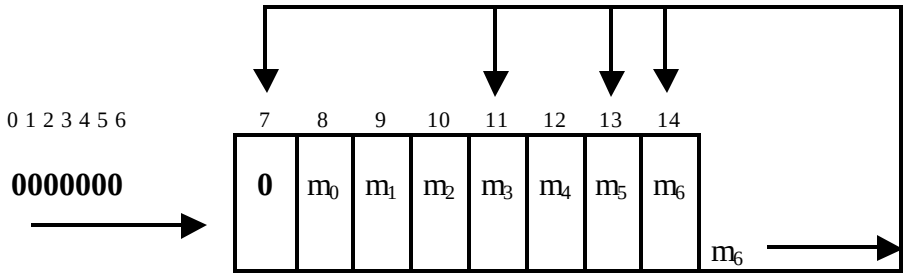

Notes:

1. The label 0 to 14 are intentionally set from the left in order to match the order of the polynomial.

FIGURE 96. Shift register encoder for the BCH (15, 7) code.

Figure 97 illustrates its operation by showing the encoding of the information vector (1000010) to form the code vector (10100101 | 1000010), where the parity check sequence is shown before the partition and the information sequence after. The information sequence, bits 8 to 14, with eight zeros, bits 0 to 7, after it (place holders for the parity bits to be calculated) is shifted into the register initially (it is really a 15-bit shift register but only the last eight positions, bits 7 to 14, correspond to the coefficients of g(x) and contain feedback connections). The operation of the shift register consists of seven rounds of shift, feedback, and sum operations. The parity portion of the code vector, bits 7 to 14, can then be read out of the shift register as shown.

Downloaded from http://www.everyspec.com

APPENDIX K

	0 1 2 3 4 5 6	7	8	9	10	11	12	13	14	
	0000000	0	m_0 1	m_1 0	m_2 0	m_3 0	m_4 0	m_5 1	m_6 0	
Shift	000000	0	0	1	0	0	0	0	1	0
Feedback		0				0		0	0	
Sum	000000	0	0	1	0	0	0	0	1	
Shift	00000	0	0	0	1	0	0	0	0	1
Feedback		1				1		1	1	
Sum	00000	1	0	0	1	1	0	1	1	
Shift	0000	0	1	0	0	1	1	0	1	1
Feedback		1				1		1	1	
Sum	0000	1	1	0	0	0	1	1	0	
Shift	000	0	1	1	0	0	0	1	1	0
Feedback		0				0		0	0	
Sum	000	0	1	1	0	0	0	1	1	
Shift	00	0	0	1	1	0	0	0	1	1
Feedback		1				1		1	1	
Sum	00	1	0	1	1	1	0	1	0	
Shift	0	0	1	0	1	1	1	0	1	0
Feedback		0				0		0	0	
Sum	0	0	1	0	1	1	1	0	1	
Shift		0	0	1	0	1	1	1	0	1
Feedback		1				1		1	1	
Sum (final)		1	0	1	0	0	1	0	1	
		r_0	r_1	r_2	r_3	r_4	r_5	r_6	r_7	

FIGURE 97. Encoding example.

Downloaded from http://www.everyspec.com

Thus, the code polynomial is:

$$v(x) = r_0 + r_1x + r_2x^2 + r_3x^3 + r_4x^4 + r_5x^5 + r_6x^6 + r_7x^7$$

$$+ x^8 (m_0 + m_1 x + m_2 x^2 + m_3 x^3 + m_4 x^4 + m_5 x^5 + m_6 x^6)$$

$$= 1 + x^2 + x^5 + x^7 + x^8 + x^{13}$$

And the complete code word is:

$$(r_0 \;\; r_1 \;\; r_2 \;\; r_3 \;\; r_4 \;\; r_5 \;\; r_6 \;\; r_7 \;\; m_0 \;\; m_1 \;\; m_2 \;\; m_3 \;\; m_4 \;\; m_5 \;\; m_6)$$

i.e. (101001011000010)

the first bit transmitted

Again, Figure 98 illustrates its operation by showing the BCH (15, 7) encoding of the robust frame format subfield. The setting of robust frame format for the example is with multi-dwell majority vote 3 out of 5 BCH (15,7) encoding (6 64-bit segments per packet) and no scrambling or convolutional encoding. The robust frame format information vector is (1101101) to form the robust frame format code vector (10110110 | 1101101), where the parity check sequence is shown before the partition and the information sequence after.

Downloaded from http://www.everyspec.com

APPENDIX K

	0 1 2 3 4 5 6	7	8	9	10	11	12	13	14	
	0000000	0	m_0 1	m_1 1	m_2 0	m_3 1	m_4 1	m_5 0	m_6 1	
Shift	000000	0	0	1	1	0	1	1	0	1
Feedback		1				1		1	1	
Sum	000000	1	0	1	1	1	1	0	1	
Shift	00000	0	1	0	1	1	1	1	0	1
Feedback		1				1		1	1	
Sum	00000	1	1	0	1	0	1	0	1	
Shift	0000	0	1	1	0	1	0	1	0	1
Feedback		1				1		1	1	
Sum	0000	1	1	1	0	0	0	0	1	
Shift	000	0	1	1	1	0	0	0	0	1
Feedback		1				1		1	1	
Sum	000	1	1	1	1	1	0	1	1	
Shift	00	0	1	1	1	1	1	0	1	1
Feedback		1				1		1	1	
Sum	00	1	1	1	1	0	1	1	0	
Shift	0	0	1	1	1	1	0	1	1	0
Feedback		0				0		0	0	
Sum	0	0	1	1	1	1	0	1	1	
Shift		0	0	1	1	1	1	0	1	1
Feedback		1				1		1	1	
Sum (final)		1	0	1	1	0	1	1	0	
		r_0	r_1	r_2	r_3	r_4	r_5	r_6	r_7	

FIGURE 98. Robust frame format encoding example.

Downloaded from http://www.everyspec.com

Thus, the code polynomial is:

$$v(x) = r_0 + r_1x + r_2x^2 + r_3x^3 + r_4x^4 + r_5x^5 + r_6x^6 + r_7x^7$$

$$+ x^8 (m_0 + m_1 x + m_2 x^2 + m_3 x^3 + m_4 x^4 + m_5 x^5 + m_6 x^6)$$

$$= 1 + x^2 + x^3 + x^5 + x^6 + x^8 + x^9 + x^{11} + x^{12} + x^{14}$$

And the complete code word is:

$$(r_0 \;\; r_1 \;\; r_2 \;\; r_3 \;\; r_4 \;\; r_5 \;\; r_6 \;\; r_7 \;\; m_0 \;\; m_1 \;\; m_2 \;\; m_3 \;\; m_4 \;\; m_5 \;\; m_6)$$

i.e. (101101101101101)

the first bit transmitted

K.3.2 Hardware/Software decoding. Because of its special structure (it is completely orthogonalizable in one step), the BCH (15,7) code can be decoded very efficiently with a majority logic scheme which can be directly implemented in software or hardware. It is most easily described in terms of the shift register implementation shown in Figure 99. With gate 2 open and gate 1 closed, the received block is read into the shift register. The output of the four modulo 2 summers is sampled by the majority gate and processed as follows: if a clear majority of the inputs are ones (three or more) then the output is one, otherwise (if two or fewer inputs are ones) the output is zero. This output is used to correct the last bit of the shift register. The corrected bit is output to the receiver and feedback through gate 2 as the register is right shifted. The process is now repeated thirteen times until the last bit is corrected.

Downloaded from http://www.everyspec.com

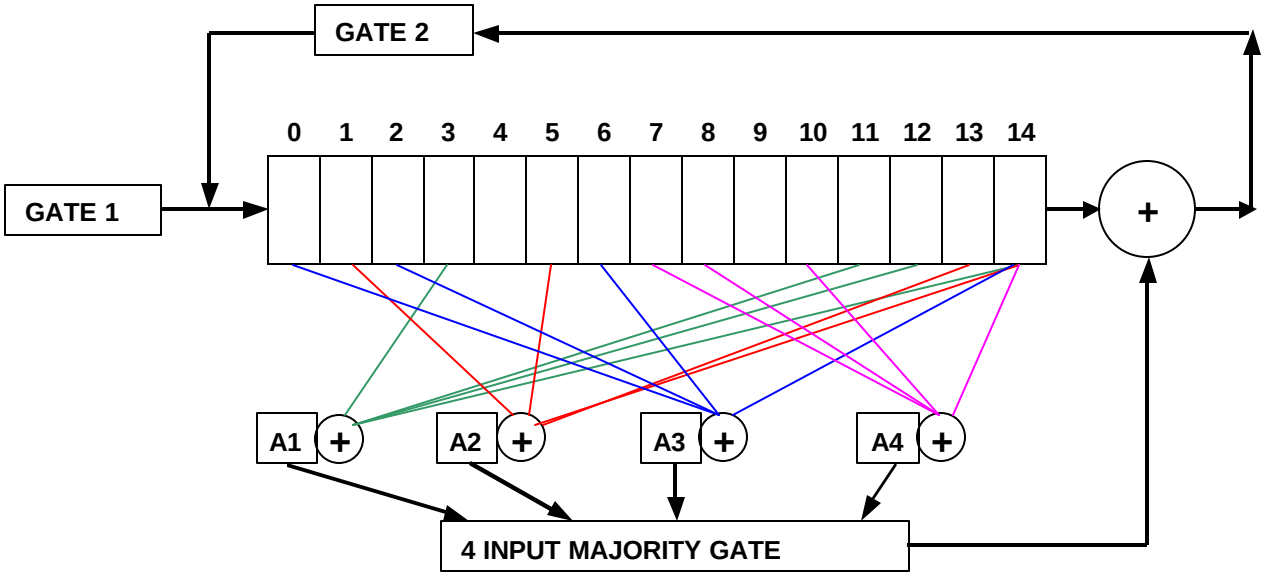

A1	3	11	12	14
A2	1	5	13	14
A3	0	2	6	14
A4	7	8	10	14

FIGURE 99. BCH (15, 7) majority logic decoding.

The parity check matrix H of the BCH (15,7) code as shown in Figure 100 can also be obtained in systematic form from the generator matrix as shown in Figure 101. The BCH (15, 7) majority logic decoding is derived from the matrix H, Figure 100.

Downloaded from http://www.everyspec.com

H =

0	1	2	3	4	5	6	7	8	9	10	11	12	13	14
1	0	0	0	0	0	0	0	1	1	0	1	0	0	0
0	1	0	0	0	0	0	0	0	1	1	0	1	0	0
0	0	1	0	0	0	0	0	0	0	1	1	0	1	0
0	0	0	1	0	0	0	0	0	0	0	1	1	0	1
0	0	0	0	1	0	0	0	1	1	0	1	1	1	0
0	0	0	0	0	1	0	0	0	1	1	0	1	1	1
0	0	0	0	0	0	1	0	1	1	1	0	0	1	1
0	0	0	0	0	0	0	1	1	0	1	0	0	0	1

FIGURE 100. BCH (15, 7) parity check matrix.

K.3.3 Software encoding. The BCH (15,7) code is most efficiently encoded in systematic form from the generator matrix shown in Figure 101.

G =

0	1	2	3	4	5	6	7	8	9	10	11	12	13	14
1	0	0	0	1	0	1	1	1	0	0	0	0	0	0
1	1	0	0	1	1	1	0	0	1	0	0	0	0	0
0	1	1	0	0	1	1	1	0	0	1	0	0	0	0
1	0	1	1	1	0	0	0	0	0	0	1	0	0	0
0	1	0	1	1	1	0	0	0	0	0	0	1	0	0
0	0	1	0	1	1	1	0	0	0	0	0	0	1	0
0	0	0	1	0	1	1	1	0	0	0	0	0	0	1
Parity								**Identity**						

FIGURE 101. BCH (15, 7) generator matrix.

The BCH(15, 7) encoding of the robust frame format subfield as specified in the example of Figure 98 is shown below.

Downloaded from http://www.everyspec.com

APPENDIX K

G =

	0	1	2	3	4	5	6	7	8	9	10	11	12	13	14
g_1	1	0	0	0	1	0	1	1	1	0	0	0	0	0	0
g_2	1	1	0	0	1	1	1	0	0	1	0	0	0	0	0
g_3	0	1	1	0	0	1	1	1	0	0	1	0	0	0	0
g_4	1	0	1	1	1	0	0	0	0	0	0	1	0	0	0
g_5	0	1	0	1	1	1	0	0	0	0	0	0	1	0	0
g_6	0	0	1	0	1	1	1	0	0	0	0	0	0	1	0
g_7	0	0	0	1	0	1	1	1	0	0	0	0	0	0	1

The BCH(15,7) code vector:

v = **m (dot product) G**

$$= (m_0\ m_1\ m_2\ m_3\ m_4\ m_5\ m_6)\ \textbf{(dot product)} \begin{bmatrix} g_1 \\ g_2 \\ g_3 \\ g_4 \\ g_5 \\ g_6 \\ g_7 \end{bmatrix}$$

Thus, the robust frame format code vector for robust frame format subfield m (1101101) is:

		1	**(dot product)**	(1	0	0	0	1	0	1	1	1	0	0	0	0	0	0)
	+	1	**(dot product)**	(1	1	0	0	1	1	1	0	0	1	0	0	0	0	0)
	+	0	**(dot product)**	(0	1	1	0	0	1	1	1	0	0	1	0	0	0	0)
v =	+	1	**(dot product)**	(1	0	1	1	1	0	0	0	0	0	0	1	0	0	0)
	+	1	**(dot product)**	(0	1	0	1	1	1	0	0	0	0	0	0	1	0	0)
	+	0	**(dot product)**	(0	0	1	0	1	1	1	0	0	0	0	0	0	1	0)
	+	1	**(dot product)**	(0	0	0	1	0	1	1	1	0	0	0	0	0	0	1)
i.e.	**v** =			(1	0	1	1	0	1	1	0	1	1	0	1	1	0	1)

Downloaded from http://www.everyspec.com

Then, the complete robust frame format BCH(15, 7) code word is:

(101101101101101)

the first bit transmitted

This is the same code vector obtained in the robust frame format encoding example, Figure 98.

Downloaded from http://www.everyspec.com

APPENDIX L

TRANSMISSION CHANNEL INTERFACES

L.1. General.

L.1.1 Scope. This appendix describes transmission channel interfaces for DMTD and interfacing C^4I systems.

L.1.2 Application. This appendix is a mandatory part of MIL-STD-188-220. The information contained herein is intended for compliance.

L.2. Applicable documents.

a.	MIL-STD-188-110	Equipment Technical Design Standards for Common Long Haul/Tactical Data Modems
b.	MIL-STD-188-114	Electrical Characteristics of Digital Interface Circuits
c.	MIL-STD-188-200	System Design and Engineering Standards for Tactical Communications
d.	CCITT V.10	Electrical Characteristics for Unbalanced Double-Current Interchange Circuits for General Use with Integrated Circuit Equipment in the Field of Data Communications.
e.	CCITT X.21	Interface Between Data Terminal Equipment (DTE) and Data Circuit-Terminating Equipment (DCE) for Synchronous Operation on Public Data Networks.

L.3. Definitions. Refer to Appendix A.

L.4. Detailed requirements.

L.4.1 Transmission channel interfaces. The transmission channel interfaces specified below define the transmission envelope characteristics (signal waveform, transmission rates, and operating mode)

Downloaded from http://www.everyspec.com

authorized at the standard interface between a DMTD and the transmission channel. The transmission channel may consist of wireline, satellite, or radio links.

L.4.1.1 Non-return-to-zero (NRZ) interface. A NRZ signal waveform shall be used for this interface. This interface is used primarily with digital transmission equipment.

L.4.1.1.1 Waveform. The NRZ unbalanced and balanced waveforms shall conform to 5.1.1.7 and 5.2.1.7, respectively, of MIL-STD-188-114A.

L.4.1.1.2 Transmission rates. The output transmission rates of the NRZ interface shall be the following bit rates: 75, 150, 300, 600, 1200, 2400, 4800, 9600, and 16000 bits per second (bps).

L.4.1.1.3 Operating mode. The NRZ interface shall support half-duplex transmission.

L.4.1.2 Frequency-shift keying (FSK) interface for voice frequency channels. This interface may be used. It is primarily associated with analog single-channel [3-kilohertz (KHz)] radio equipment. The FSK data modem characteristics shall conform to 5.2.2 of MIL-STD-188-110.

L.4.1.2.1 Waveform. The FSK modulation waveform shall conform to 5.2.2.1 of MIL-STD-188-110. The characteristic frequencies, in hertz (Hz), for transmission rates of 600 bps or less, and 1200 bps, shall be as shown in Table LXXX.

L.4.1.2.2 Transmission rates. Output transmission rates of the FSK interface shall be the following bit rates: 75, 150, 300, 600, and 1200 bps.

L.4.1.2.3 Operating mode. The FSK interface shall support half-duplex transmission.

TABLE LXXX. Characteristic frequencies of FSK interface for voice frequency channels.

PARAMETER	CHARACTERISTIC FREQUENCY (Hz)	
	600 bps or less	1200 bps
Mark Frequency	1300	1300
Space Frequency	1700	2100

Downloaded from http://www.everyspec.com

L.4.1.3 Frequency-shift keying (FSK) interface for single-channel radio. This interface, used within DoD, may also be used for North Atlantic Treaty Organization (NATO) single-channel radio applications. The FSK interface data modem characteristics shall conform to 5.1 of MIL-STD-188-110.

L.4.1.3.1 Waveform. The FSK modulation waveform shall conform to 5.1.1 and 5.1.2 of MIL-STD-188-110. The characteristic frequencies shall be as specified in Table LXXXI.

TABLE LXXXI. Characteristic frequencies of FSK interface for single-channel radio.

PARAMETER	CHARACTERISTIC FREQUENCY (Hz)
Mark Frequency	1575
Space Frequency	2425

L.4.1.3.2 Transmission rates. Output transmission rates of the single-channel FSK interface shall be the following bit rates: 75, 150, 300, 600, and 1200 bps.

L.4.1.3.3 Operating mode. The single-channel FSK interface shall support half-duplex transmission.

L.4.1.4 Conditioned diphase (CDP) interface. This interface may be used. It is primarily associated with wideband wireline equipment.

L.4.1.4.1 Waveform. The CDP modulation waveform shall conform to 5.4.1.4 of MIL-STD-188-200. The unbalanced and balanced signal waveform shall conform to 5.1.1.7 and 5.2.1.7, respectively, of MIL-STD-188-114A.

L.4.1.4.2 Transmission rates. The output transmission rate of the CDP interface shall be 16 and 32 kilobits per second (kbps).

L.4.1.4.3 Operating mode. The CDP interface shall support half-duplex transmission.

Downloaded from http://www.everyspec.com

L.4.1.5 Differential phase-shift keying (DPSK) interface for voice frequency channels. This interface may be used. It is primarily associated with analog (nominal 4-KHz voice frequency) wireline and radio equipment. DPSK modulation data modem (2400 bps) and phase-shift keying (PSK) modulation data modem (1200 bps) characteristics shall conform to the applicable requirements of MIL-STD-188-110.

L.4.1.5.1 Waveform. The DPSK modulation waveform shall conform to Appendix A of MIL-STD-188-110. The PSK modulation waveform shall conform to 5.3 of MIL-STD-188-110.

L.4.1.5.2 Transmission rates. The output transmission rate of the DPSK and PSK interfaces shall be 2400 and 1200 bps, respectively.

L.4.1.5.3 Operating mode. The DPSK and PSK interfaces shall support half-duplex transmission.

L.4.1.6 Packet mode interface. This interface may be used. If present, this interface shall use a modified CCITT X.21 half-duplex synchronous interface, with a CCITT V.10 electrical circuit, for transferring data across the interface between data terminal equipment (DTE) (i.e. the DMTD or C^4I system) and data circuit-terminating equipment (DCE).

L.4.1.6.1 Waveform. The electrical characteristics of the packet mode interface shall be identical to CCITT V.10 for interfaces to voice band modems.

L.4.1.6.2 Transmission rates. The DTE device shall be required to accept signal timing from the DCE (radio) at 16 kbps. The DTE shall be required to synchronize to the DCE signal timing and accept data at the supplied signaling timing rate. In the packet mode, the radio provides signal timing to support 16 kbps data transfers between the radio and the DTE.

L.4.1.6.3 Operating mode. The packet mode interface shall support half-duplex transmission.

L.4.1.7 Amplitude shift keying (ASK) interface. This interface is used primarily with analog voice grade radios to transmit digital data.

L.4.1.7.1 Waveform. The ASK waveform is a band limited NRZ waveform with average white Gaussian noise added to it. The ASK signal shall be a bipolar signal nominally centered around ground. However due to the radio automatic gain control performance, the ASK signal may have a direct current (DC) component. The ASK signal-to-noise ratio (S/N) shall be in the range of 0 to 12 decibels (dB). The ASK signal shall be demodulated using an optimal bit synchronizer with a bit error rate (BER) performance of 1.5 dB from theoretical.

Downloaded from http://www.everyspec.com

L.4.1.7.2 Transmission rates. The output transmission rates of the ASK interface shall be the following bit rates: 2400, 4800, 9600 and 16000 bps.

L.4.1.7.3 Operating mode. The ASK interfaces shall support half-duplex transmission.

Downloaded from http://www.everyspec.com

CONCLUDING MATERIAL

a. Preparing Activity:

US Army Communications Electronics Command (USACECEOM): CR1

b. Custodians:

Army:	CR1
Navy:	OM
Air Force:	02
DISA:	DC1
DIA:	DI
NSA:	NS
NORAD & USSPACECOM :	US

c. Review Activities:

OSD:	IR, SE
Army:	AC, CR, MI, PT
Navy:	CG, EC, MC, NC, TD
Air Force:	11, 13, 93
DISA:	DC5
DCMA:	CM
NIMA:	MP
DOT:	OST

d. Project number:

TCSS-0058

Downloaded from http://www.everyspec.com

STANDARDIZATION DOCUMENT IMPROVEMENT PROPOSAL

INSTRUCTIONS

1. The preparing activity must complete blocks 1, 2, 3, and 8. In block 1, both the document number and revision letter should be given.

2. The submitter of this form must complete blocks 4, 5, 6, and 7, and send to preparing activity.

3. The preparing activity must provide a reply within 30 days from receipt of the form.

NOTE: This form may not be used to request copies of documents, nor to request waivers, or clarification of requirements on current contracts. Comments submitted on this form do not constitute or imply authorization to waive any portion of the referenced document(s) or to amend contractual requirements.

I RECOMMEND A CHANGE:	1. DOCUMENT NUMBER	2. DOCUMENT DATE *(YYYYMMDD)*
	MIL-STD-188-220C	20020522

3. DOCUMENT TITLE

DIGITAL MESSAGE TRANSFER DEVICE SUBSYSTEMS

4. NATURE OF CHANGE *(Identify paragraph number and include proposed rewrite, if possible. Attach extra sheets as needed.)*

5. REASON FOR RECOMMENDATION

6. SUBMITTER

a. NAME *(Last, First, Middle Initial)*	b. ORGANIZATION	
c. ADDRESS *(Include ZIP Code)*	d. TELEPHONE *(Include Area Code)* (1) Commercial (2) DSN *(If applicable)*	**7. DATE SUBMITTED** *(YYYYMMDD)*

8. PREPARING ACTIVITY

a. NAME	b. TELEPHONE *(Include Area Code)*
Mr. Raymond Menell	(1) Commercial (732) 532-0654 (2) DSN 992-0654
c. ADDRESS *(Include ZIP Code)* CDR, USACECOM ATTN: AMSEL-SE-CD Fort Monmouth, NJ 07703	**IF YOU DO NOT RECEIVE A REPLY WITHIN 45 DAYS, CONTACT:** Defense Standardization Program Office (DLSC-LM) 8725 John J. Kingman Road, Suite 2533 Fort Belvoir, Virginia 22060-6221 Telephone (703) 767-6888 DSN 427-6888

Reset