MIL-STD-172C
30 September 1982
SUPERSEDING
MIL-STD-172B
9 August 1968

MILITARY STANDARD

COLOR CODE FOR

CONTAINERS OF LIQUID PROPELLANTS

FSC 9135

DEPARTMENT OF DEFENSE

Washington, DC 20301

COLOR CODE FOR CONTAINERS OF LIQUID
PROPELLANTS

MIL-STD-172C

1. This Military Standard is approved for use by all Departments and Agencies of the Department of Defense.

2. Beneficial comments (recommendations, additions, deletions) and any pertinent data which may be of use in improving this document should be addressed to: Commander, US Army Missile Command, ATTN: DRSMI-RSDS, Redstone Arsenal, AL 35898 by using the self-addressed Standardization Document Improvement Proposal (DD Form 1426) appearing at the end of this document or by letter.

FORWARD

1. The object of this standard is to establish a common color code for visual warnings to accompany the written identification of liquid propellant containers, and to facilitate the segregation of these containers at depots and servicing points.

2. The purpose of this standard is to promote greater safety and lessen the chances of error, confusion, or inaction in times of emergency by providing a uniform color code to quickly warn personnel of outstanding hazards inherent in the liquids involved. However, this standard does not define the manner or conditions under which these liquids may be stored or used safely. This color code is supplementary to all the caution, warning, and marking requirements contained in Department of Transportation and/or Department of Defense regulations and other Military Standards and is not intended to minimize or replace such regulations. The code, however, is a valuable adjunct to all other safety measures employed in the marking, handling and storage of liquid propellants.

3. This standard establishes, defines, and assigns colors for recognition of all liquid propellants. Colors used represent five classes of liquids (according to the universally recognized types of hazards involved in the handling of dangerous liquids). This color code requires the application of the colors in a distinctive manner, as a visual aid and supplement to written identification.

CONTENTS

FIGURES

TABLES

1. SCOPE

1.1 Scope. This color code is applicable to all portable liquid propellant containers as defined in 3.2 and 3.3, except containers excluded in 1.2.

1.2 Limitations. This color code is not applicable to containers other than containers of liquid propellants. Compressed Gas Cylinders which are covered by MIL-STD-101, COLOR CODE FOR PIPELINES AND FOR COMPRESSED-GAS CYLINDERS, are excluded from this standard. Containers mounted on vehicles and owned by or procured for the Department of Defense are excluded from this standard. Permanently mounted storage containers for liquid petroleum product systems covered by MIL-STD-161. IDENTIFICATION METHODS FOR BULK PETROLEUM PRODUCT SYSTEM, are also excluded from this standard. IDENTIFICATION OF PIPE, HOSE AND TUBE LINES FOR AIRCRAFT, MISSILES AND SPACE SYSTEMS should be in accordance with MIL-STD-1247. THE APPLICATION OF THIS STANDARD TO COMMERCIAL-OWNED CONTAINERS IS ENCOURAGED.

2. REFERENCED DOCUMENT

2.1 Issues of documents. The following documents of the issue in effect on date of invitation for bids or request for proposal, form a part of this standard to the extent specified herein.

STANDARD

Federal

FED-STD-595, COLORS

Military

MIL-STD-129, MARKING FOR SHIPMENT AND STORAGE

(Copies of specifications, standards, drawings, and publications required by contractors in connection with specific procurement functions should be obtained from the procuring activity or as directed by the contracting officer.)

3. DEFINITIONS

3.1 "Liquid Propellant". The term "liquid propellant" as used in this standard is applicable to liquids, liquefied compressed gases, cryogenic liquids, and their mixtures which are used as rocket fuels, oxidizers, or starting fuels. Also included are the propellant pressurants having physically dangerous properties; the monopropellants having physically dangerous properties; the

monopropellants having properties such as thermal instability, shock sensitivity, or are explosive in nature; and the pyrophoric fuels having spontaneous ignition properties in the air. The more familiar propellants are listed in Table I.

3.2 Liquid propellant container. The term "liquid propellant containers" as used in this standard is any drum, barrel, bottle, can, dewar, insulated container, sampler, or other type container larger than three inches in diameter by six inches in height, or cylinders not covered by other standards, used for the purpose of transporting and handling liquid propellants.

3.3 Exterior container. An exterior container is any box or other package for such containers as specified in 3.2.

3.4 Nomenclature. The nomenclature shall be the nomenclature approved by the Office of Cataloging, OASD, and such additional modifiers or portions of the approved item description as may be required by the responsible government agency.

3.5 Commercial colors. Commercial colors are the colors which may be used, in limited arrangement on the lower one-sixth of the body and the bottom of the container, for commercial identification and designations of ownership.

4. GENERAL REQUIREMENTS

4.1 Color code application. The use of color coding for portable Government-owned containers of liquid propellants is MANDATORY and shall apply to the exterior container as well as the liquid propellant container.

4.1.1 Assignment of colors. The colors and combinations of colors used for the purpose of color coding liquid propellant containers shall be as specified in 5.4. Only liquid propellants which have been requested for coverage are classified herein. All new materials shall be marked and coded in accordance with the principals set forth herein. The assignment of colors to extend the coverage of materials shall be made only after the approval of the Office of Standardization.

4.1.1.1 Primary color warning. A primary color warning is the color assigned to the class into which a liquid propellant is classified in accordance with its primary hazard from a safety standpoint. This color appears as the top color band on liquid propellant containers, or stripe on exterior containers.

4.1.1.2 Secondary color warning. A secondary color warning is the color assigned as a warning of a secondary hazard possessed by a liquid propellant having a type hazard distinctly different from that indicated by its primary color warning. This color appears as the next lower color band on liquid propellant containers or stripe on exterior containers.

4.1.1.3 Tertiary color warning. A tertiary color warning is the color assigned to signify that the material has monopropellant or pyrophoric properties. This color appears as a third lower color band on liquid propellant containers or stripe on exterior containers.

4.2 Colors. The colors assigned in this standard shall conform in hue, value, and chrome to the requirements identified by numbers specified in Federal Standard No. 595, or substantially equal colors.

4.3 Identification. Exact identification of any liquid propellant contained in a container is MANDATORY and shall be made only by means of the written nomenclature. The propellant names listed in Table I for identification purposes are generally but not necessarily the proper nomenclature.

4.3.1 Application of nomenclature. For containers marked in accordance with MIL-STD-129 the approved nomenclature included in that marking will be sufficient. For containers not used for shipment and storage, the "nomenclature" shall be applied as specified by the responsible government agency.

5. DETAIL REQUIREMENTS

5.1 Color significance. The significance of each color assigned shall be as specified below:

5.1.1 Warning colors. The colors specified below are assigned for use as primary, secondary, and tertiary warnings.

Class standard of color	Class of liquid propellant
1. Yellow, No. 13655	Flammable and pyrophoric liquids. All liquid propellants known ordinarily as flammables or combustibles. All liquid propellants having the additional pyrophoric property that is self-igniting when exposed to normal atmospheric conditions.
2. Brown, No. 10080	Toxic and poisonous liquids. All liquid propellants extremely hazardous to life or health under normal conditions as toxic or poisons, predominantly by inhalation.

Class standard color	Class of liquid propellant
3. Blue, No. 15102	Anaesthetics and harmful liquids. All liquid propellants productive of anesthetic vapors and/or hazardous to life and property, predominantly by ingestion, absorption or contact, but not normally productive of dangerous quanties of fumes or vapors.
4. Green, No. 14260	Oxidizing liquids. All liquid propellants which readily furnish oxygen for combustion and fire producers which react explosively or with the evolution of heat in contact with many other materials.
5. Gray, No. 16187	a. All liquid propellants, not dangerous in themselves, which are asphyxiating in confined areas or which are generally handled in a dangerous physical state of pressure or temperature. b. All liquid propellants having monopropellant properties, such as thermal instability, shock sensitivity, or which may be catalytically decomposed.

5.1.2 Use of other colors. The color RED shall NOT be used for color coding liquid propellant containers as red has been reserved for use to denote fire protection materials.

5.2 Use of colors on containers.

5.2.1 Coding. The top band (or stripe) shall indicate the primary hazard and the next lower band (or stripe) shall indicate the secondary hazard. For materials classified as "monopropellants", a third (gray) band (or stripe) indicating monopropellant properties, shall be used.

5.2.2 Size of band (or stripe). Bands (or stripes) shall be of equal width. There shall be no separation between bands (or stripes). Bands (or stripes) shall be of such width that the entire color code may be placed on the portion of container designated for color code, but shall not be less than the following:

Container Height (in)	Band (or stripe) width (in)
6-10	3/4
over 10	1-1/2

5.2.3 Background color. The background color of the container or the exterior packaging may be the natural color of the material or any colors such as black, olive drab, buff or white which are without significant meaning and do not conflict with the warning color.

5.2.4 Compatibility of coloring media and propellants. When possible coloring media whose properties are compatible with the contents of the containers shall be used for color coding. Any property which is toxic, flammable, anesthetic, corrosive, or explosive in contact with the contents of the container shall be considered incompatible.

5.3 Location of color code on containers.

5.3.1 Color code location, liquid propellant containers. Color code bands indicating primary hazard, secondary hazard, and mono-propellant properties when applicable, shall be applied as shown in figure 1. Bands shall extend entirely around the container perpendicular to the longitudinal axis of the containers whenever feasible. In cases where the application of color bands extending completely around the containers is not feasible due to location of gauges, valves, vents, ports, etc., the color bands shall extend around the containers as far as it is feasible. Color used shall be as specified in 5.4.

5.3.2 Color code location, exterior container. Color code stripes indicating primary hazard, secondary hazard, and monopropellant properties when applicable, shall be applied as shown in figure 2. Stripes shall be applied at the two diagonally opposite corners on the upper one-third portion of the sides (or ends and sides, as applicable) and parallel to the top of such containers. The stripes shall extend 4 inches along each adjacent side (or end and side, as applicable, but not on the same corners as the service color markings). Color used shall be as specified in 5.5.

TABLE I
LIQUID PROPELLANT CONTAINER COLOR CODE

Propellant	Warning Color		
	Primary	Secondary	Tertiary
Acetonitrile	Brown	--	--
Aerozine	Brown	Yellow	Gray
Air, liquefied	Gray	Green	--
Alcohol, denatured	Yellow	Brown	--
Aluminum borohydride	Yellow	Brown	Yellow
Amine fuel mixture (1)	Brown	Yellow	--
Ammonia, anhydrous, liquefied	Brown	Yellow	--
Aniline	Brown	Yellow	--
Argon, liquefied	Gray	--	--
Bromine pentafluoride	Brown	Green	--
Chlorine pentafluoride, liquefied	Brown	Green	--
Chlorine trifluoride, liquefied	Brown	Green	--
Diethylaniline	Brown	Yellow	--
Diethylenetriamine	Yellow	--	--
Dimethylhydraizine,uns.	Brown	Yellow	Gray
Ethylene oxide	Yellow	Blue	Gray
Fluorine, liquefied	Brown	Green	--
Furfuryl, alcohol	Yellow	Brown	--
Helium, liquefied	Gray	--	--
Hydrazine, anhydrous	Brown	Yellow	Gray
Hydrazine fuel mixture (1)	Brown	Yellow	--
Hydrogen, liquefied	Yellow	--	--
Hydrogen peroxide	Green	Blue	Gray
Monoethylaniline	Brown	Yellow	--
Monomethylhydrazine	Brown	Yellow	Gray
Nitric acid, fuming	Brown	Green	--
Nitrogen, liquefied	Gray	--	--
Nitrogen oxides mixtures, liquefied	Brown	Green	--
Nitrogen, tetroxide, liquefied	Brown	Green	--
Nitrogen trifluoride, liquefied	Blue	Green	--
Nitromethane	Yellow	Blue	Gray
Oxygen, liquefied (LOX)	Green	Gray	--
Oxygen, difluoride, liquefied	Brown	Green	--
Pentaborane	Brown	Yellow	Yellow
Perchlorylfluoride, liquefied	Brown	Green	--
Petroleum fuels	Yellow	--	--
Petroleum gas, liquefied	Yellow	--	--
Propyl nitrate, normal	Yellow	Brown	Gray
Tetrafluorohydrazine, liquefied	Brown	Green	--
Tetranitromethane	Yellow	Brown	Gray
Triethyl aluminum	Yellow	--	--
Triethyl boron	Yellow	Brown	Yellow
Trifluoroamino oxide, liquefied	Brown	Green	--
Trimethyl aluminum	Yellow	--	--

5.4 Hazard classification. The most significant safety hazard is deemed the primary color. The next most significant safety hazard is deemed the secondary color. The special safety hazards of pyrophoric and monopropellant are deemed the tertiary color. To determine the order of significance apply the recognized hazard or hazards for the material to the following precedence listing. The top hazard becomes the primary. The next highest (if appropriate) becomes the secondary, and the hazard applied to item "g" (if appropriate) becomes the tertiary.

a. Very toxic and poisonous liquids with actual or anticipated threshold, limit values or equivalent of 20 ppm or less.

b. Flammable liquids.

c. Oxidizing liquids.

d. Less toxic and poisonous liquids.

e. Anesthetics and harmful liquids.

f. Physically dangerous liquids.

g. Pyrophoric and monopropellant liquids.

5.5 Propellant color code. The propellant color code shall be as shown in Table I.

NOTES: 1. Mixtures containing any combination of amines, anilines, hydrazines, alcohols or petroleum fuels.

5.5.1 Additional identification.

5.5.2 Commercial color identification. The bottom and lower one-sixth portion of the container body may be used for commercial identification on containers not owned by or produced for the Department of Defense.

5.5.3 Decalcomanias. Three decalcomanias may be applied to each container, two on the color code bands, diametrically opposite each other and at right angles to the nomenclature and where feasible, one on the top of each container. If used, the decalomanias shall indicate the name of the liquid propellant and precautions for handling and use. Decalcomanias shall have a black-ground color with white lettering. Decalcomanias shall not be "diamond shaped" in order to avoid confusion with DIT decalcomanias.

Custodians:
Army-MI
Navy-AS
Air Force-12

Review Activities:
Army- ER
Navy-MC
Air Force- 19, 68

Preparing Activity:
Army-MI

Project No: 9135-0105

FIGURE 1. CONTAINER COLOR CODE ILLUSTRATION.

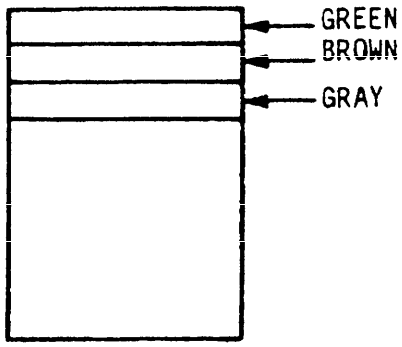

FIGURE 2. EXTERIOR CONTAINER COLOR CODE ILLUSTRATION

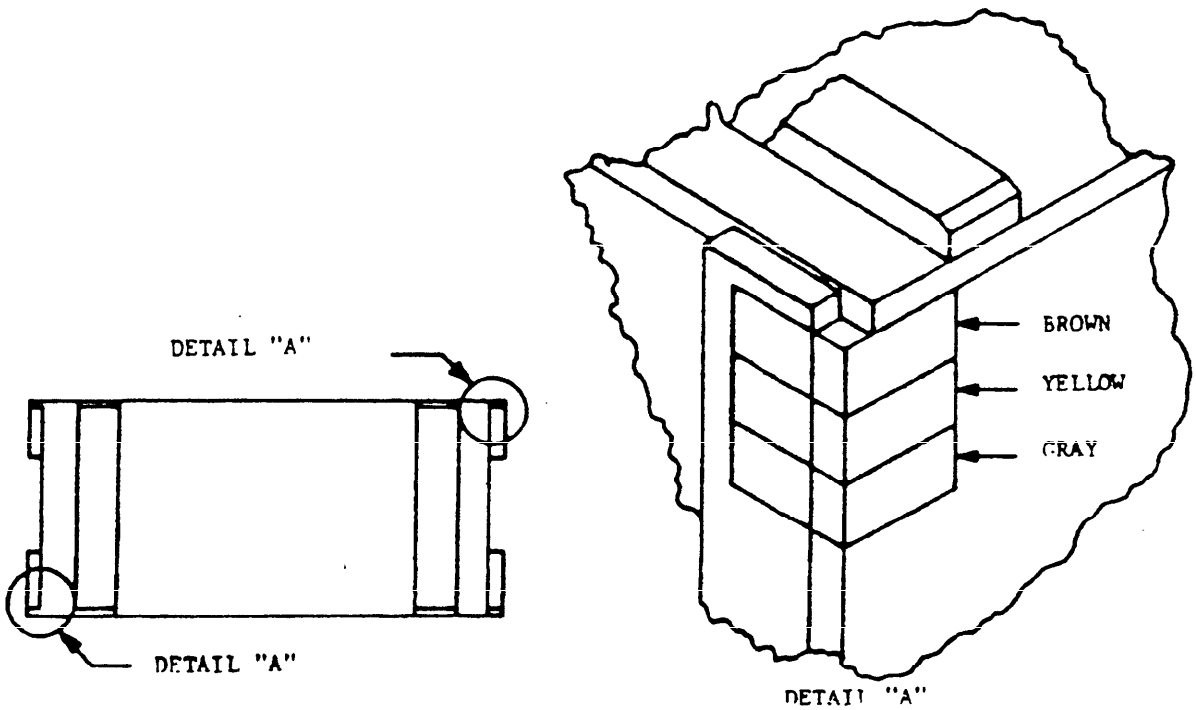

NOTE: ILLUSTRATIONS DEPICTED ARE TYPICAL AND ARE NOT INTENDED TO REPRESENT ANY SPECIFIC TYPE OF CONTAINER.

FOLD

DEPARTMENT OF THE ARMY

OFFICIAL BUSINESS
PENALTY FOR PRIVATE USE $300

NO POSTAGE NECESSARY IF MAILED IN THE UNITED STATES

BUSINESS REPLY CARD

FIRST CLASS PERMIT NO. 12062 WASHINGTON D. C.

POSTAGE WILL BE PAID BY THE DEPARTMENT OF THE ARMY

Commander
US Army Missile Command
ATTN: DRSMI-RSDS
Redstone Arsenal, AL 35898

FOLD

STANDARDIZATION DOCUMENT IMPROVEMENT PROPOSAL

OMB Approval
No. 22-R255

INSTRUCTIONS: The purpose of this form is to solicit beneficial comments which will help achieve procurement of suitable products at reasonable cost and minimum delay, or will otherwise enhance use of the document. DoD contractors, government activities, or manufacturers/vendors who are prospective suppliers of the product are invited to submit comments to the government. Fold on lines on reverse side, staple in corner, and send to preparing activity. Comments submitted on this form do not constitute or imply authorization to waive any portion of the referenced document(s) or to amend contractual requirements. Attach any pertinent data which may be of use in improving this document. If there are additional papers, attach to form and place both in an envelope addressed to preparing activity.

DOCUMENT IDENTIFIER AND TITLE
MIL-STD-172C CONTAINERS OF LIQUID PROPELLANTS

NAME OF ORGANIZATION AND ADDRESS

CONTRACT NUMBER

MATERIAL PROCURED UNDER A
☐ DIRECT GOVERNMENT CONTRACT ☐ SUBCONTRACT

1. HAS ANY PART OF THE DOCUMENT CREATED PROBLEMS OR REQUIRED INTERPRETATION IN PROCUREMENT USE?
   A. GIVE PARAGRAPH NUMBER AND WORDING.

   B. RECOMMENDATIONS FOR CORRECTING THE DEFICIENCIES

2. COMMENTS ON ANY DOCUMENT REQUIREMENT CONSIDERED TOO RIGID

3. IS THE DOCUMENT RESTRICTIVE?
   ☐ YES ☐ NO *(If "Yes", in what way?)*

4. REMARKS

SUBMITTED BY *(Printed or typed name and address - Optional)*

TELEPHONE NO.

DATE

DD FORM 1 JAN 72 1426 REPLACES EDITION OF 1 JAN 66 WHICH MAY BE USED